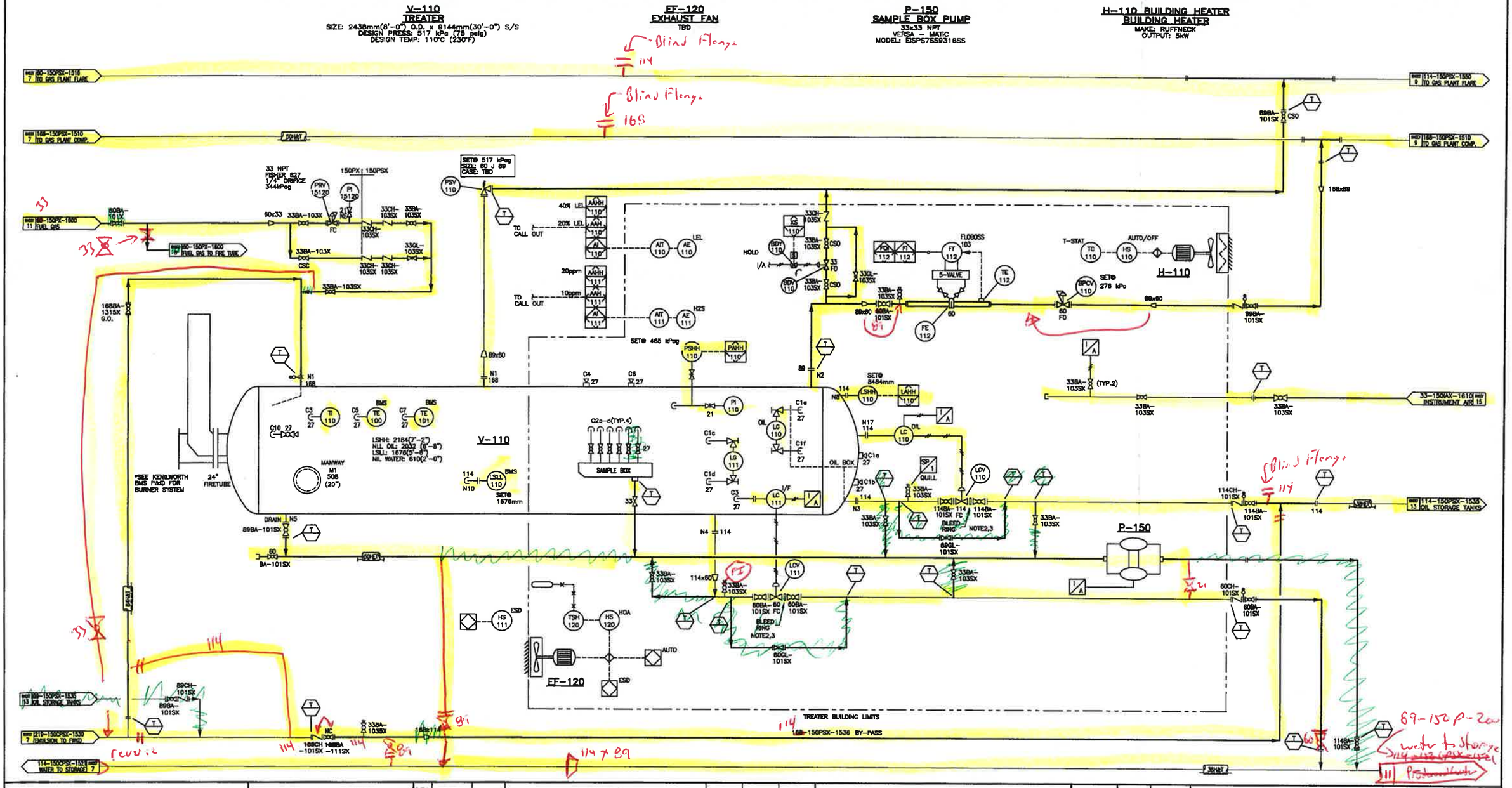

NOTES	REFERENCE DRAWINGS	REV.	DATE	BY	DESCRIPTION	CHK'D	APP'D	CLIENT
1. ORIGINAL FWKO V-151 WAS REPLACED BY THIS UNIT V-110.		10	12.06.28	FN	ISSUED FOR CONSTRUCTION (ME JOB# 12535)			
2. REUSE LIQUID SUMP VALVES		9F	12.06.26	FN	ISSUED FOR ENGINEERING (ME JOB# 12535)			
3. ADD SS BLEED RING TO DRAIN COATED SPOOLS		9C	12.06.06	AW	ISSUED FOR REVIEW (ME JOB# 12535)			
		9B	11.08.18	FE	ISSUED FOR REVIEW (MRC JOB# 12535)			
		9A	11.07.12	CA	CONVERTED TO GALLEON TITLEBLOCK			
		9	10.10.18	CAF	PHASE II EXPANSION GENERAL REVISIONS			
		8	10.10.15	CAF	PHASE II EXPANSION			
		7	10.09.21	CAF	POST CONSTRUCTION			
		6	10.05.03	CAF	GENERAL REVISIONS			
		5	10.07.20	CAF	REVISED AS PER CLIENTS REMARKS			

ENGINEERING & PERMIT STAMPS

PROFESSIONAL ENGINEER ALBERTA

PERMIT TO PRACTICE
MILLENIA RESOURCE CONSULTING
Signature _____
Date _____
PERMIT NUMBER: P 6109
The Association of Professional Engineers Geologists and Geophysicists of Alberta

	BY	DATE
DRAWN:	CA	11.07.12
CHECKED:		
DESIGN:		
APPROVED:		
CLIENT:		
MRC JOB No.:	12535	
CADNAME:	[illegible]	

GUIDEX
Guide Exploration Ltd.

MILLENIA ENGINEERING

KAKUT 14-12 GAS PLANT
LSD 14-12-75-3 W6M
TREATER (V-110)
PIPING & INSTRUMENTATION DIAGRAM

SCALE/PLOT SCALE	DRAWING NAME	REV.
NTS	74514-P&ID-00-02-SHEET 8	10