F-80000
INLET FILTER COALESCER
SIZE: 762mm (30") OD x 3048mm (10') S/S
MODEL: JVC-8-30-1415-12-336-47-MC C/W MINI CYCLONES (41 TUBES)
c/w (12) JONNELL JPMG-336-CE-R ELEMENTS
DESIGN: 9750 KPAG (1414 PSIG)/FV @ -29/60°C (-20/140°F)
C.A.: 3.2mm (1/8")
ESTIMATED WEIGHT (EMPTY): 4332 KG (9550 LBS)

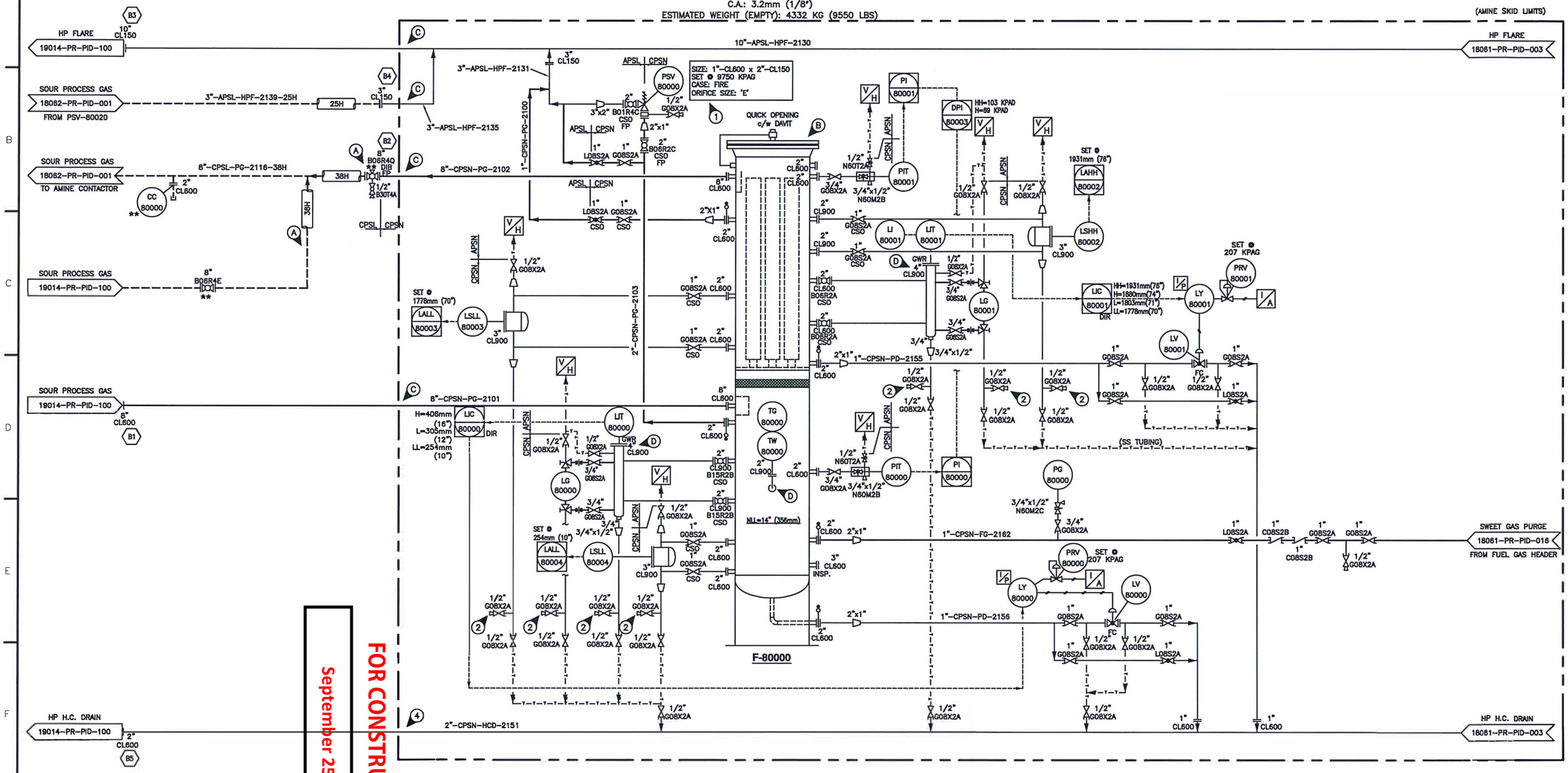

FOR CONSTRUCTION
September 25, 2019

GENERAL NOTES

A. ISOLATION AND BYPASS VALVES FOR COALESCER ARE SUPPLIED BY OTHERS OUTSIDE OF BUILDING.
B. VESSEL ACCESS LADDER TO PLATFORM SUPPLIED BY STARTEC.
C. ALL PIPING PROJECTING OUTSIDE OF THE BUILDING TO BE LOW TEMP MATERIAL BACK TO THE FIRST JOINT INSIDE BUILDING.
D. TW AND LITS ARE STAINLESS STEEL AND REQUIRE CL900 CONNECTIONS.

1. FULL FLOW RELIEF TO BE PROVIDED BY OTHERS.
2. FOR LEVEL CALIBRATION.
3. IN GENERAL, ANY SOUR GAS VENT SHALL GO TO V/H BY DEFAULT.
4. SET POINTS PROVIDED ARE PRELIMINARY. TO BE ADJUSTED DURING START-UP OPERATION AS NECESSARY.
5. EQUIPMENT WEIGHTS PROVIDED ARE FOR REFERENCE ONLY. REFER TO THE LATEST EQUIPMENT DRAWINGS FOR UPDATED WEIGHTS.

* VALVES AND INSTRUMENTS SUPPLIED BY STARTEC AND SHIPPED LOOSE
** VALVES AND INSTRUMENTS SUPPLIED BY OTHERS
--- FIELD PIPING C/W INSULATION AND HEAT TRACING BY OTHERS AS NECESSARY

NO.	DATE	BY	AP'D	DESCRIPTION	NO.	DATE	BY	AP'D	DESCRIPTION
A	19-01-07	DD	SR	ISSUED FOR APPROVAL					
B	19-01-21	DD		ISSUED FOR APPROVAL					
C	19-03-04	KJH		GENERAL REVISIONS					
0	19-04-17	GE		ISSUED FOR CONSTRUCTION					
0.1	19-05-13	GE		ISSUED FOR HAZOP					
0.2	19-09-04	GE		NO CHANGES ON THIS SHEET					

55 GPM AMINE GAS PLANT

STARTEC
COMPRESSION & PROCESS LTD.
APEGA NO. P13139

DRAWN: DD | DATE: 19-01-21
CHECKED: – | DATE:
ENG. APP'L: SR | DATE: Sept 20, 19
PACKAGE NO.: –
REFERENCE NO.: –

CUSTOMER:

TITLE: PIPING & INSTRUMENTATION DIAGRAM INLET SEPARATOR COALESCER

SCALE: N.T.S. | DRAWING NO.: 18061-PR-PID-001 | REV. 0.2