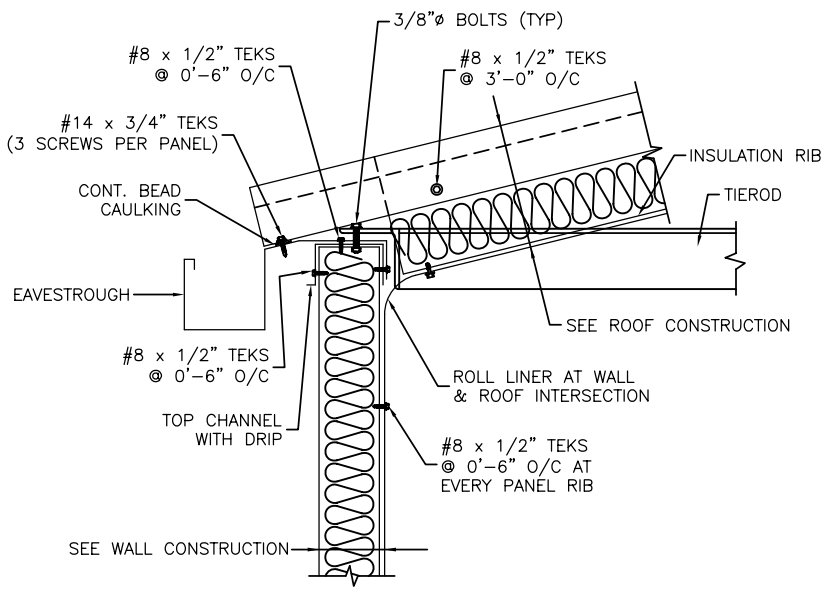

EAVE DETAIL

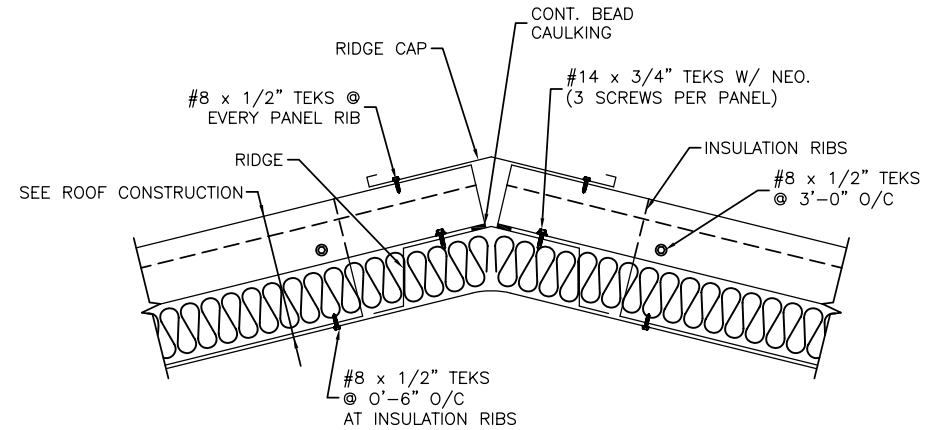

RIDGE DETAIL

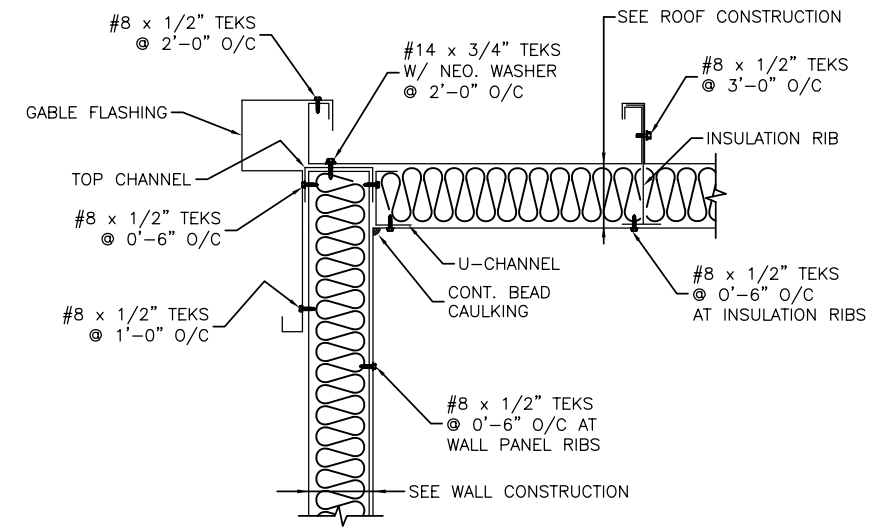

GABLE DETAIL

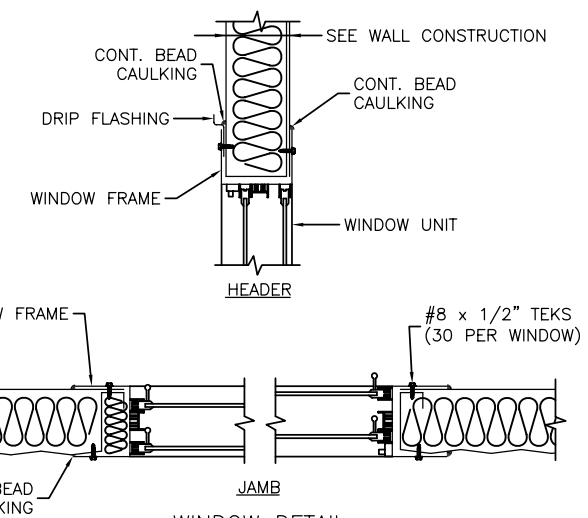

WINDOW DETAIL

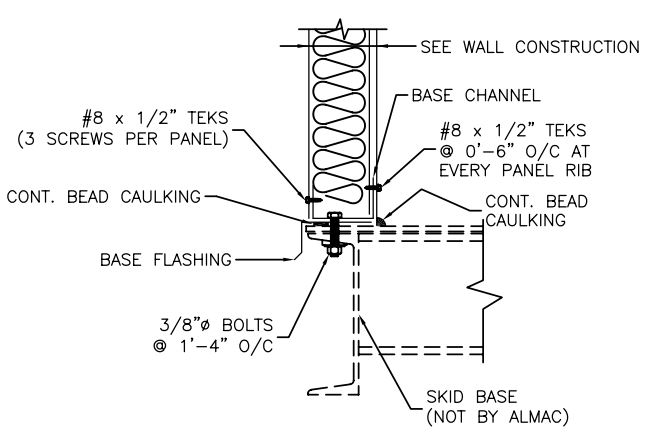

BASE DETAIL

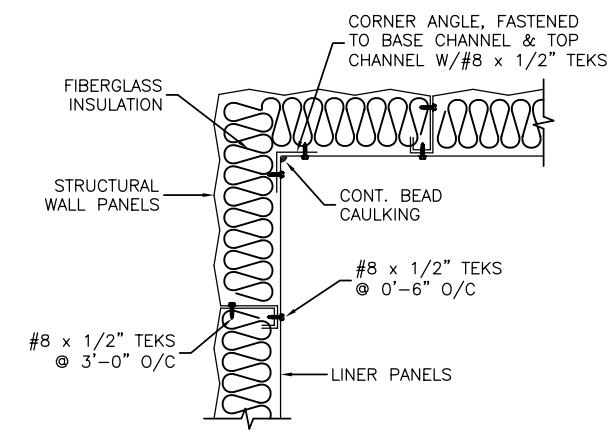

BUILDING CORNER DETAIL

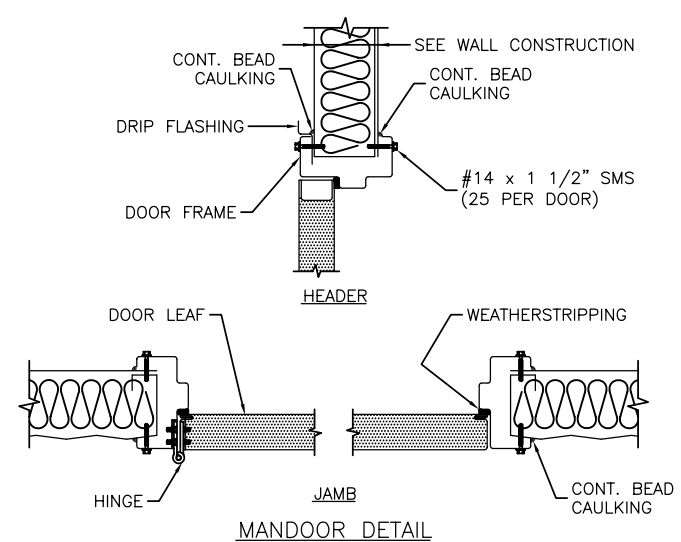

MANDOOR DETAIL

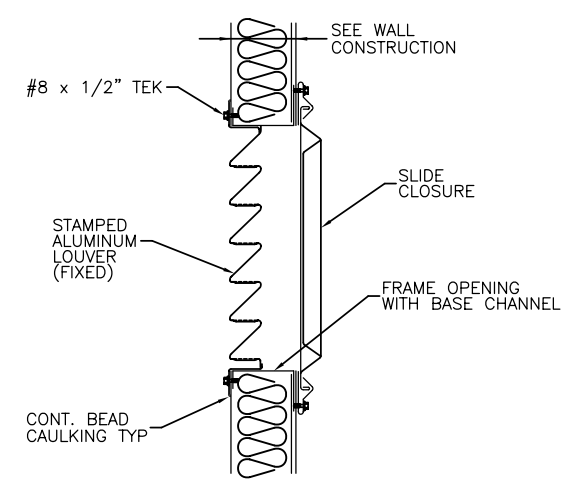

STAMPED LOUVER DETAIL

P/EFX DWG# B7113-141 SHT 2 OF 2

REV.	DESCRIPTION	BY	DATE
3			
2			
1			
0	ISSUED FOR APPROVAL	TR	2004/12/14

Almac Metal Industries Ltd.
6140-76th AVENUE
EDMONTON, ALBERTA
T6B 0A6
PHONE: (780) 465-0861
FAX: (780) 465-4198

CLIENT: PRESSON ENERFLEX MANUFACTURING LTD.	DRAWN BY: TR	CHECKED BY:	
TITLE: TRIDENT EXPLORATION LTD. P/EFX JOB# B7113-86	SCALE: NTS		
	DATE: 2004/12/14		
LOCATION:	JOB NUMBER	SHEET	
SHEET DESCRIPTION: TYPICAL BUILDING DETAILS	6076	6076-2	
		REV. 0	