THIS DRAWING IS THE EXCLUSIVE PROPERTY OF PRESSON ENERFLEX AND MAY NOT BE COPIED OR COMMUNICATED TO A THIRD PARTY WITHOUT THE WRITTEN AUTHORIZATION OF PRESSON ENERFLEX.

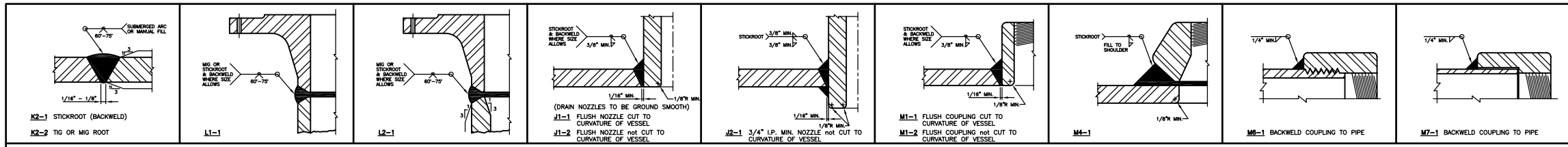


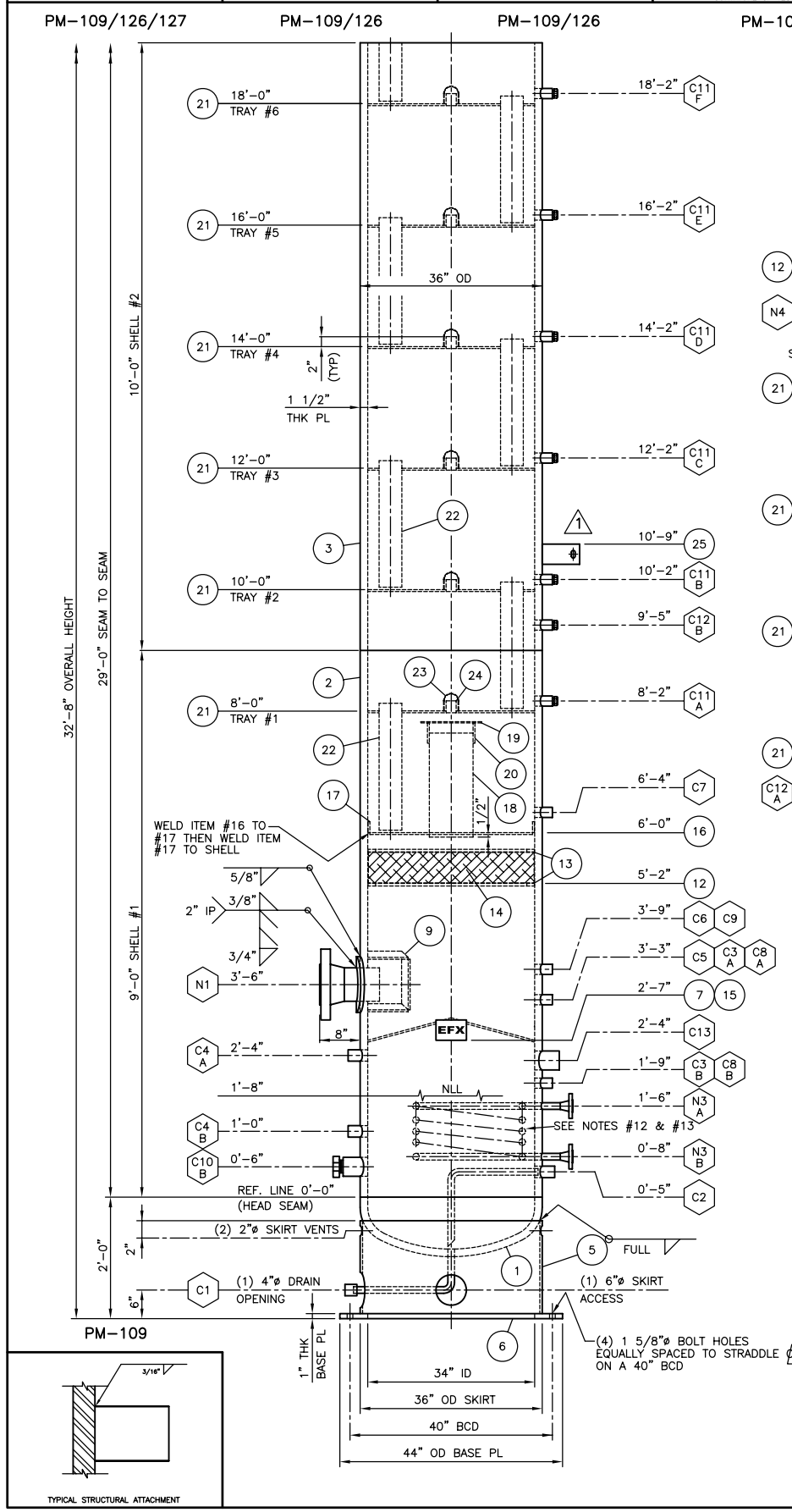


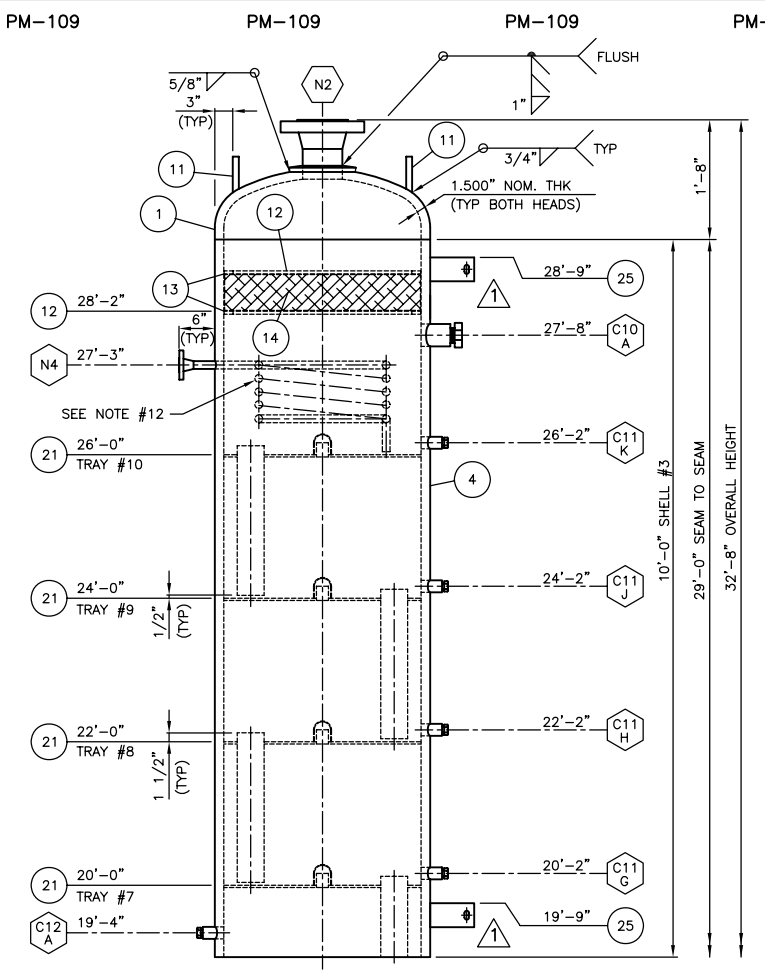


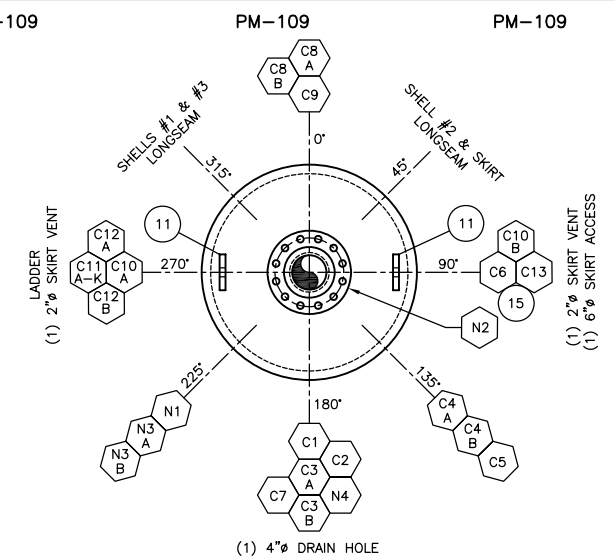


ORIENTATION

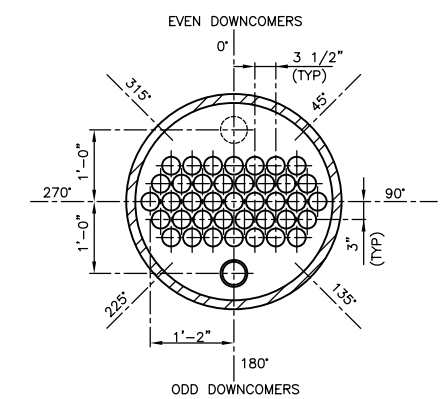


BUBBLE CAP LAYOUT

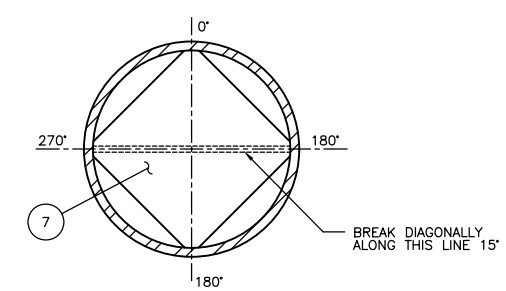


SPLASH BAFFLE

## BILL OF MATERIALS

| MARK | PART | DESCRIPTION | QTY | MATERIAL | WELD SYM |
|---|---|---|---|---|---|
| 1 | HEADS | 36" OD x 1 1/2" NOM. THK 2:1 SE HEAD w/2" SF | 2 | SA-51670N | K2-2 |
| | | (HOT FORMED) | | | |
| 2 | SHELL #1 | 36" OD x 1 1/2" PL x 9'-0" LG | 1 | SA-51670N | K2-1/K2-2 |
| 3 | SHELL #2 | 36" OD x 1 1/2" PL x 10'-0" LG | 1 | SA-51670N | K2-1/K2-2 |
| 4 | SHELL #3 | 36" OD x 1 1/2" PL x 10'-0" LG | 1 | SA-51670N | K2-1/K2-2 |
| 5 | SKIRT | 36" OD x 1/2" PL x 1'-10" LG | 1 | SA-51670N | K2-1/K2-2 |
| 6 | BASE PLATE | 44" OD x 1" PL x 34" ID | 1 | SAG40.2144W | |
| 7 | SPLASH BAFFLE | 25" SQ PL x 3/8" PL (BREAK DOWN ALONG | 1 | SAG40.2144W | |
| | | DIAGONAL 15°) | | | |
| 9 | INLET DEFLECTOR | 10" x 10" x 8" x 3/8" PL (FAB BOX, TILT | 1 | SAG40.2144W | |
| | | DOWN 15°) | | | |
| 11 | LIFT LUGS | 6" x 1" PL x 6" LG c/w (1) 1 1/2"ø HOLE | 2 | SAG40.2144W | |
| 12 | MIST PAD SUPP | 32 7/8" OD x 3/8" PL x 29 7/8" ID | 4 | SAG40.2144W | |
| 13 | MIST PAD SUPP | 32 3/4" OD x 4# XPM | 4 | CS | |
| 14 | MIST PAD | 32 3/4" OD x 6" THK MIST PAD | 2 | 304 SS | |
| 15 | NAME PLATE | STANDARD NAME PLATE c/w 'T' BRACKET | 1 | SAG40.2150W | |
| 16 | CHIMNEY TRAY | 32 1/8" OD x 3/8" PL x 8 3/4" ID | 1 | SAG40.2144W | |
| 17 | C.T. SUPPORT | 2" x 3/8" FB x 8'-5" LG (ROLL TO 32 7/8" OD) | 1 | SAG40.2144W | |
| 18 | CHIMNEY | 8" SCH STD PIPE x 1'-8" LG | 1 | SA-53B | |
| 19 | CHIMNEY CAP | 12" OD x 1/4" PL | 1 | SAG40.2144W | |
| 20 | CAP SUPPORT | 2" x 3/8" FB x 4" LG | 2 | SAG40.2144W | |
| 21 | TRAYS #1-#10 | 32 7/8" OD x 3/8" PL | 10 | SAG40.2144W | |
| 22 | DOWNCMR #1-#10 | 4" SCH STD PIPE x 2'-1" LG | 10 | SA-53B | |
| 23 | BUBBLE CAP | 3" OD x 3" LG STD BUBBLE CAP | 390 | CS | |
| 24 | RISERS | 2"ø TUBING x 2 5/8" LG | 390 | SA-179 | |
| 25 | LADDER CLIP | REFER TO DRAWING B7113-240 SHT 2 OF 2 | | | |
| | | | | | |
| | | | | | |
| | | | | | |
| N1 | INLET | 6" 600# SCH XH RFWN FLG | 1 | SA-105N | L2-1 |
| | | 6" SCH XXH SMLS PIPE x 7" LG | 1 | SA-106B | SEE N1 |
| | REPAD | 11" OD x 3/4" PL x 6 3/4" ID (ROLL TO 36" ID) | 1 | SA-51670N | SEE N1 |
| N2 | GAS OUTLET | 6" 600# SCH XH RFWN FLG | 1 | SA-105N | L2-1 |
| | | 6" SCH XXH SMLS PIPE x 5 1/8" LG | 1 | SA-106B | SEE N2 |
| | REPAD | 11" OD x 3/4" PL x 6 3/4" ID (FORM TO | 1 | SA-51670N | SEE N2 |
| | | 36" OD 2:1 SE HEAD) | | | |
| N3 | GLYCOL COIL | 1" 600# SCH 160 RFWN FLG | 2 | SA-105N | L1-1 |
| | | 1" SCH 160 SMLS PIPE x 10" LG | 2 | SA-106B | J2-1 |
| | | 1" 3000# NPT 90° SW ELL | 2 | SA-105N | M7-1 |
| | | 1" SCH XH SMLS PIPE x 35'-0" LG | 1 | SA-106B | M7-1 |
| N4 | REFLUX COIL | 1" 600# SCH 160 RFWN FLG | 1 | SA-105N | L1-1 |
| | | 1" SCH 160 SMLS PIPE x 10" LG | 1 | SA-106B | J2-1 |
| | | 1" 3000# NPT 90° SW ELL | 1 | SA-105N | M7-1 |
| | | 1" SCH XH SMLS PIPE x 35'-0" LG | 1 | SA-106B | M7-1 |
| | | | | | |
| C1 | DRAIN | 1" 6000# NPT FULL CPLG | 1 | SA-105N | M6-1 |
| | | 1" SCH 160 SMLS PIPE x 2'-3" LG | 1 | SA-106B | J1-1 |
| C2 | LIQUID OUTLET | 1" 6000# NPT LONG CPLG x 4" LG | 1 | SA-105N | M1-2 |
| | | 1" SCH 80 SMLS PIPE x 2'-7" LG | 1 | SA-106B | M6-1 |
| C3 | LG-302 | 3/4" 6000# NPT LONG CPLG x 4" LG | 2 | SA-105N | M1-2 |
| C4 | LG -300 | 3/4" 6000# NPT LONG CPLG x 4" LG | 2 | SA-105N | M1-2 |
| C5 | TI-300 | 3/4" 6000# NPT LONG CPLG x 4" LG | 1 | SA-105N | M1-2 |
| C6 | PI-300 | 3/4" 6000# NPT LONG CPLG x 4" LG | 1 | SA-105N | M1-2 |
| C7 | GLYCOL OUT | 1" 6000# NPT LONG CPLG x 4" LG | 1 | SA-105N | M1-2 |
| C8 | LSDH-300 | 1" 6000# NPT LONG CPLG x 4" LG | 2 | SA-105N | M1-2 |
| C9 | PSV-300 | 1 1/2" 6000# NPT LONG CPLG x 4" LG | 1 | SA-105N | M1-2 |
| C10 | INSPECTION | 2" 6000# NPT FULL CPLG | 2 | SA-105N | M1-2 |
| | | 2" NPT HEX PLUG | 2 | SA-105N | |
| C11 | TRAY DRAIN | 3/4" 6000# NPT TOL | 10 | SA-105N | M4-1 |
| | | 3/4" NPT HEX PLUG | 10 | SA-105N | |
| C12 | X-RAY PORT | 1" 6000# NPT TOL | 2 | SA-105N | M4-1 |
| | | 1" NPT HEX PLUG | 2 | SA-105N | |
| C13 | LC-300 | 2" 6000# NPT FULL CPLG | 1 | SA-105N | M1-2 |
| | | | | | |
| | | | | | |
| 2 | HEAD & SHELL THICKNESS DIMENSIONS WERE REVERSED | | LM | | 04/12/10 |
| 1 | REVISED AS NOTED | | RA | | 04/10/12 |
| 0 | ISSUED FOR CONSTRUCTION | | TBB | | 04/09/28 |
| A | ISSUED FOR APPROVAL | | TP | | 04/09/17 |
| NO. | REVISION | | BY | CHECKED | DATE |

## NOTES:

12) COIL TO CONSIST OF (6) TURNS OF 1" SCH XH SMLS PIPE w/1 1/2" CC, DRAWN OVER A 20" MANDREL & SUPPORTED AS REQUIRED.
13) GLYCOL COIL N3 TO BE LOCATED NEAR VESSEL WALL TO PERMIT INSERTION OF LC-300 FLOAT.
14) VESSEL TO HAVE PRESSON STANDARD CAGED LADDER ABOVE BUILDING ROOF SEE DRAWING B7113-240 SHT 2 OF 2 FOR DETAILS.
15) VESSEL HEADS & SHELL DESIGN PER UCS-66(a), FLANGES PER UCS-66(c), ALL OTHERS PER UG 20(f).
16) IMPACT TESTS REQUIRED ON HEADS & SHELLS
TEST TEMP: -20°F
TEST RESULTS: 15 ft-lbs AVG. 12 ft-lbS MIN.
17) SEAL WELD ALL INTERNAL ATTACHMENTS WHERE ACCESSIBLE.
18) VESSEL EXTERIOR TO BE SANDBLASTED PER SSPC-SP6.
19) SANDBLASTING SHALL NOT BE CONDUCTED ON SURFACES THAT ARE LESS THAN 3°F ABOVE DEWPOINT, OR WHEN THE RELATIVE HUMIDITY OF THE AIR IS GREATER THAN 80%.

REF. DWG.: B5220-240 | C.R.N.: K8423.2

### GENERAL NOTES

1. WELDING PROCEDURES: WP-719.2
2. QUALITY CONTROL PROGRAM: AQP-1077
3. REFERENCE DRAWING NUMBER: STD. 2000 (WELD STANDARDS)
4. ALL BOLT HOLES TO STRADDLE CENTRE LINES
5. SERIAL NUMBER: B7113-20
6. SERVICE: SWEET GAS
7. LONG SEAM WPS: PM-109/127 CIRC. SEAM WPS: PM-126/127
NOZZLE TO FLG WPS: PM-109/126 OTHER WELD WPS: PM-109
8. PRE-HEAT TO: 200°F (93°C) MIN. IMPACT TESTS: SEE NOTE #16
9. SURFACE PREP. INT. : NONE EXT. : SEE NOTES #18 & #19
10. SURFACE FINISH EXT. : (1) COAT VALSPAR ZINC CHROMATE PRIMER
EXT. : (1) COAT VALSPAR WARM GREY ENAMEL
11. INSULATION : NONE

### DESIGN DATA

CODE: ASME SECTION VIII, DIV. 1, 2001 EDITION A-03 ADDENDA
DESIGN PRESS. 1415 PSIG ( 9756 kPag), DESIGN TEMP. 150 °F ( 66 °C)
MIN. DESIGN METAL TEMP. -20 °F @ 1415 PSIG ( -29 °C @ 9756 kPag)
M.A.W.P. @ MAX. TEMP. - PSIG @ - °F ( - kPag @ - °C)
M.A.W.P. NEW & COLD - PSIG ( - kPag)
HYDROSTATIC TEST PRESSURE 2123 PSIG ( 14638 kPag)
CORROSION ALLOW. 0.0625 " ( 1.6 mm), P.W.H.T. NONE
RADIOGRAPHY FULL PER RT-1
HEAD THK NOM. 1.435 " ( 36.4 mm), MIN. 1.5 " ( 38.1 mm)
SHELL THK NOM. 1.435 " ( 38.1 mm), MIN. 1.5 " ( 38.1 mm)
VOLUME 168 cu. ft. ( 4.75 cu. m)
WEIGHT EMPTY 23500 lbs ( 10680 kg)
WEIGHT FULL OF WATER 34000 lbs ( 15455 kg)

Presson ENERFLEX

CUSTOMER: TRIDENT EXPLORATION LTD.
CUSTOMER REF. NO.: T.B.A. JOB NO.: B7113-20
PROJECT: DEHYDRATION PACKAGE / CBM COMPRESSOR STATION LSD T.B.A.

TITLE: GLYCOL CONTACTOR (C-300)
36" OD x 29'-0" S/S x 1415 PSIG @ 150°F
914 mm OD x 8839 mm S/S x 9756 kPag @ 66°C

| DRAWN | CHECKED | APPROVED | SCALE | DATE | DRAWING NUMBER |
|---|---|---|---|---|---|
| TP | | | 3/4"=1'-0" | 04/09/17 | B7113-240 SHT. 1 OF 2 |