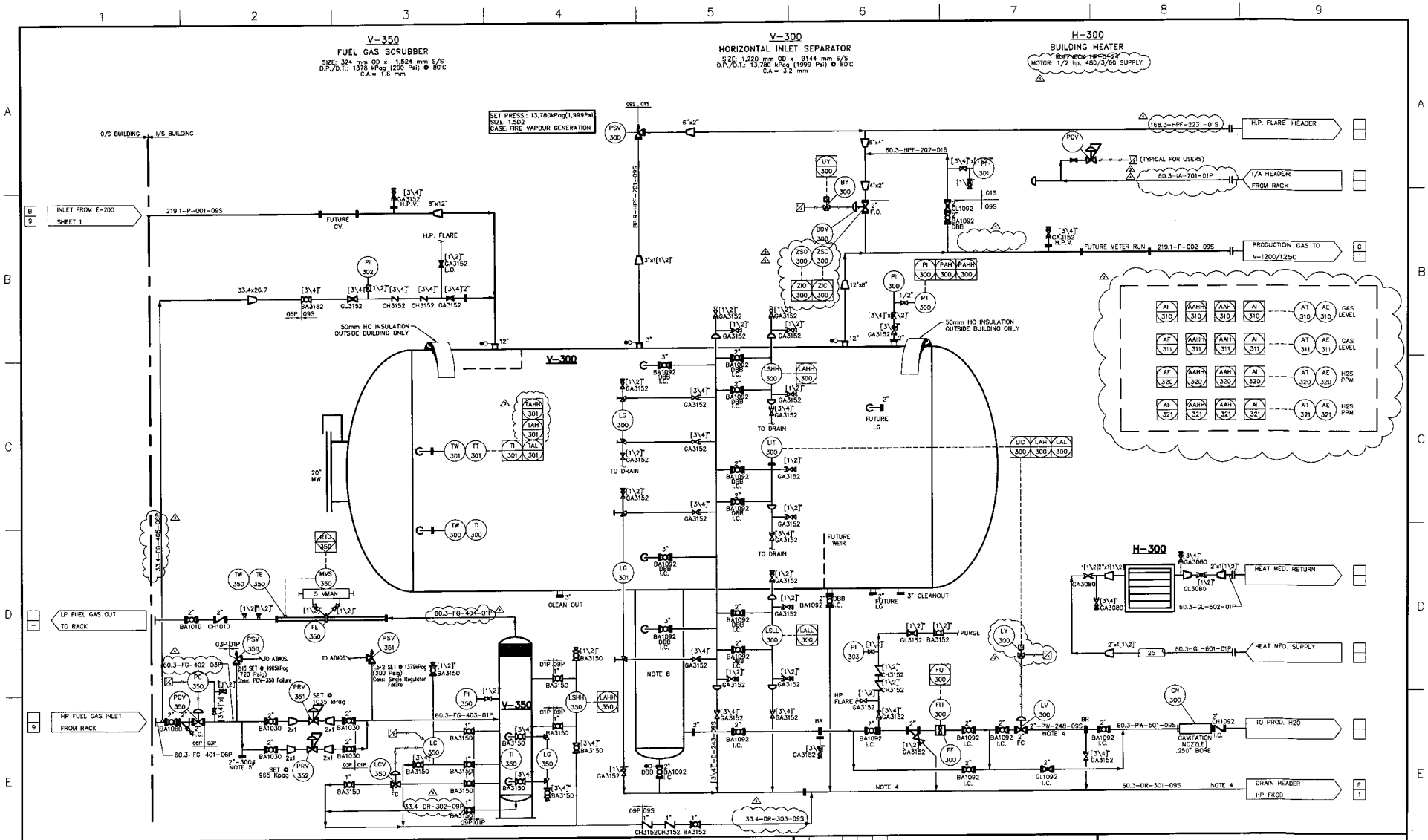

1	INLET HEADER	60.3-150# RF	NCM-ANN
TAG	DESCRIPTION	SIZE/RATING	PIPE SPEC.

CUSTOMER CONNECTIONS

TAG	DESCRIPTION	SIZE/RATING	PIPE SPEC.

CUSTOMER CONNECTIONS

GENERAL NOTES:

1. PIPING DESIGNED TO ASME CODE B31.3 - 2002 EDITION, - ADDENDA
2. INSTRUMENT AIR TUBING TO BE [3/8]" DIAMETER 0.035" WT 316SS PROCESS IMPULSE AND DRAIN TUBING TO BE [1\2]" DIAMETER 0.049" WT, FITTINGS TO BE 316SS SWAGELOK [CA/M] SS FERRULES.
3. DRAIN LINES AND PRODUCED WATER LINES TO BE INCREASED TO S160 FOR CORROSION PROTECTION.
4. POCKET ALL LIQUID & DRAIN LINES INSIDE BUILDING.
5. FUTURE COMPRESSOR START GAS TAKE OFF
6. TUBE PURGE FROM FUEL GAS WITH 1/2" .049" WT.
7. TUBE PROCESS VENTS TO HP FLARE WITH 3/8" .035" WT.
8. LIQUID BOOT TO BE INTERNALLY COATED.

REV	DATE	REV BY	CHK'D BY	APP'D BY	DESCRIPTION
4	04/04/05	JL	.	.	REVISED AS PER CUSTOMER REQUEST
3	03/24/05	JN	.	.	REVISED AS NOTED
2	03/16/05	CES	CES	RM	REVISED AS NOTED
1	02/02/05	JL	CES	RM	REVISED AS PER CUSTOMER REQUEST
0	01/14/05	JL	CES	RM	ISSUED FOR CONSTRUCTION
C	11/24/04	JL	.	.	REVISED AS PER CUSTOMER COMMENTS

REVISIONS

This drawing is the property of NATCO CANADA and is lent to the recipient for his/her confidential use only. In consideration of the loan of this drawing, the recipient promises and agrees that it shall not be used in any way detrimental to the interests of NATCO CANADA, that it shall be returned upon request, and that it shall not be reproduced, copied, lent or otherwise disposed of, directly or indirectly, without the written approval of NATCO CANADA

NATCO CANADA

CALGARY ALBERTA CANADA

TITLE: PROCESS AND MECHANICAL FLOWSHEETS FOR INLET FILTER COALESCER

CUSTOMER: CONOCOPHILLIPS

LOCATION: SHERMAN 6-3-62-12 W6M

DRAWN: JAY.L DATE: 11/02/04
ENG.: ROD M. SCALE: N.T.S.

CUST. REF. NO.: -
SHOP ORDER NO.: 8267
UNITS REQ'D: 1
DWG. NO.: D-8267-01 Sheet 2 of 8
REV: 4

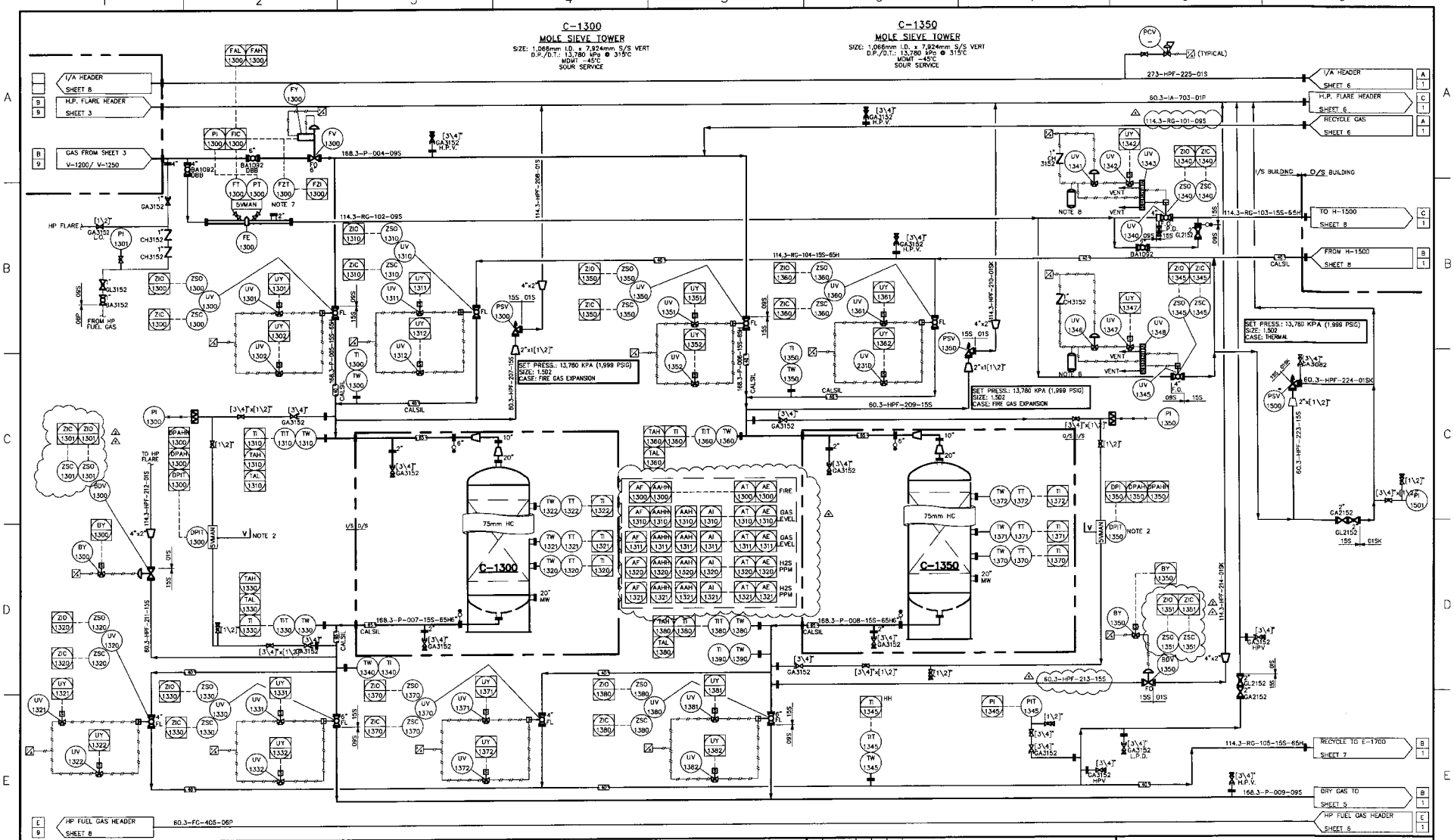

TAG	DESCRIPTION	SIZE/RATING	PIPE SPEC.
CUSTOMER CONNECTIONS			

TAG	DESCRIPTION	SIZE/RATING	PIPE SPEC.
CUSTOMER CONNECTIONS			

GENERAL NOTES:

1. PIPING DESIGNED TO ASME CODE B31.3 - 2002 EDITION
2. INSTRUMENT AIR TUBING TO BE [3\8]" DIAMETER 0.035" WT 316SS PROCESS IMPULSE AND DRAIN TUBING TO BE [1\2]" DIAMETER 0.049" WT, FITTINGS TO BE 316SS SWAGELOK [C\W] SS FERRULES.
3. DRAIN AND PRODUCED WATER LINES INCREASED TO Sch 160 FOR CORROSION PROTECTION
4. LIQUID LINES TO BE TRAPPED INSIDE BUILDING
5. ALL PURGE CONNECTIONS TO BE TURED FROM FUEL GAS HEADER
6. ALL PROCESS VENT CONNECTIONS TO BE TUBED TO HP FLARE HEADER
7. ROSEMOUNT TRI-LOOP CONVERTER TO BE MOUNTED IN A NON-HAZARDOUS LOCATION
8. INSTRUMENT AIR VOLUME TANK FOR SWITCHING VALVES UV-1340/1345

REV	DATE	REV BY	CHK'D BY	APP'D BY	DESCRIPTION
4	04/04/05	JL	-	-	REVISED AS PER CUSTOMER REQUEST
3	03/24/05	JN	-	-	DELETED ZSO-1300/1350
2	03/16/05	CES	CES	RM	REVISED AS NOTED
1	02/02/05	JL	CES	RM	REVISED AS PER CUSTOMER REQUEST
0	01/07/05	JL	CES	RM	ISSUED FOR CONSTRUCTION
C	11/24/04	JL	-	-	REVISED PER CLIENT COMMENTS

REVISIONS

This drawing is the property of NATCO CANADA and is lent to the recipient for his/her confidential use only. In consideration of the loan of this drawing, the recipient promises and agrees that it shall not be used in any way detrimental to the interests of NATCO CANADA, that it shall be returned upon request, and that it shall not be reproduced, copied, lent or otherwise disposed of, directly or indirectly, without the written approval of NATCO CANADA.

NATCO CANADA

CALGARY ALBERTA CANADA

TITLE: PROCESS AND MECHANICAL FLOWSHEETS FOR MOLE SIEVE

CUSTOMER: CONOCOPHILLIPS

LOCATION: SHERMAN 6-3-62-12 W6M

DRAWN: JAY.L | DATE: 11/02/04 | ENG.: ROD M | SCALE: N.T.S.

CUST. REF. NO.: - | SHOP ORDER NO.: 8267 | UNITS REQ'D: 1 | DRWG. NO.: D-8267-01 Sheet 4 of 8 | REV: 4

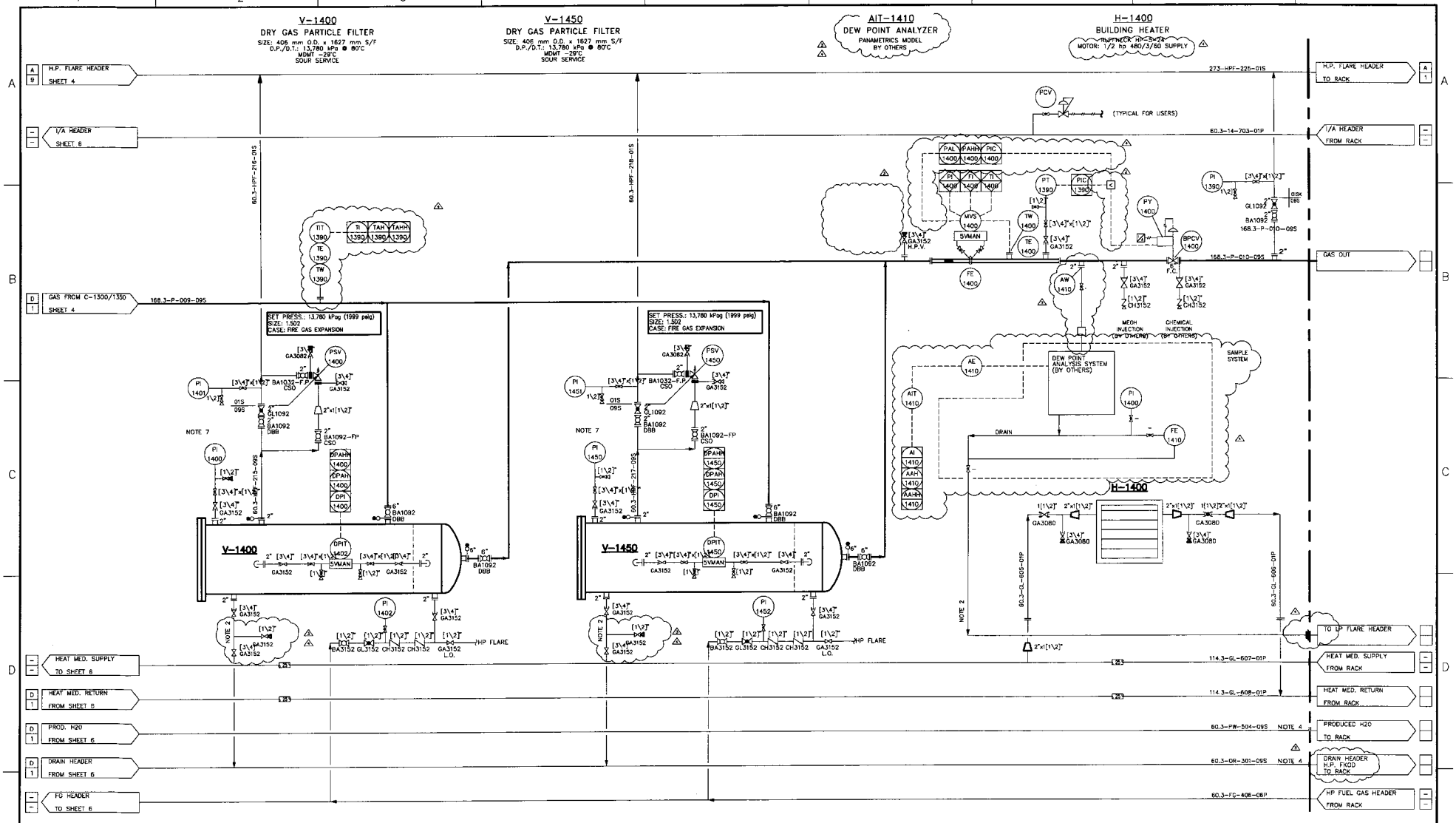

TAG	DESCRIPTION	SIZE-RATING	PIPE SPEC.	TAG	DESCRIPTION	SIZE-RATING	PIPE SPEC.
–	–	–	–				

CUSTOMER CONNECTIONS

GENERAL NOTES:

1. PIPING DESIGNED TO ASME CODE B31.3 – 2002 EDITION, – ADDENDA
2. INSTRUMENT AIR TUBING TO BE [3\8]" DIAMETER 0.035" WT 316SS PROCESS IMPULSE AND DRAIN TUBING TO BE [1\2]" DIAMETER 0.049" WT, FITTINGS TO BE 316SS SWAGELOK [C\W] SS FERRULES.
3.
4. LIQUID LINES TO BE TRAPPED INSIDE BUILDING.
5. TUBE PURGE FROM FUEL GAS WITH 1/2" .049" WT.
6. TUBE PROCESS VENTS TO HP FLARE WITH 3/8" .035" WT.
7. MOUNT PI OUTSIDE BUILDING WALL VISIBLE FROM VESSEL CLOSURE

REV	DATE	DRN'D BY	CHK'D BY	APP'D BY	DESCRIPTION
4	04/04/05	JL			REVISED AS PER CUSTOMER REQUEST
3	03/24/05	JN			REVISED AS NOTED
2	03/16/05	CES	CES	RM	REVISED AS NOTED
1	02/02/05	JL	CES	RM	REVISED AS PER CUSTOMER REQUEST
0	01/14/05	JL	CES	RM	ISSUED FOR CONSTRUCTION
C	11/25/04	JL			REVISED PER CLIENT COMMENTS

REVISIONS

This drawing is the property of NATCO CANADA Ltd. and is lent to the recipient for his confidential use only. In consideration of the loan of this drawing, the recipient promises and agrees that it shall not use used in any way detrimental to the interests of NATCO CANADA Ltd., that it shall be returned upon request, and that it shall not be reproduced copied, lent or otherwise disposed of, directly or indirectly, without the written approval of NATCO CANADA Ltd.

NATCO CANADA

CALGARY ALBERTA CANADA

TITLE: PROCESS AND MECHANICAL FLOWSHEETS FOR DRY GAS FILTERS

CUSTOMER: **CONOCOPHILLIPS**

LOCATION: SHERMAN 6-3-62-12 W6M

DRAWN: JAY L. DATE: 11/02/04
ENG.: ROD M. SCALE: N.T.S

CUST. REF. NO.: –
SHOP ORDER NO.: 8267
UNITS REQ'D: 1
DWG. NO.: D-8267-01 Sheet 5 of 8
REV: 4

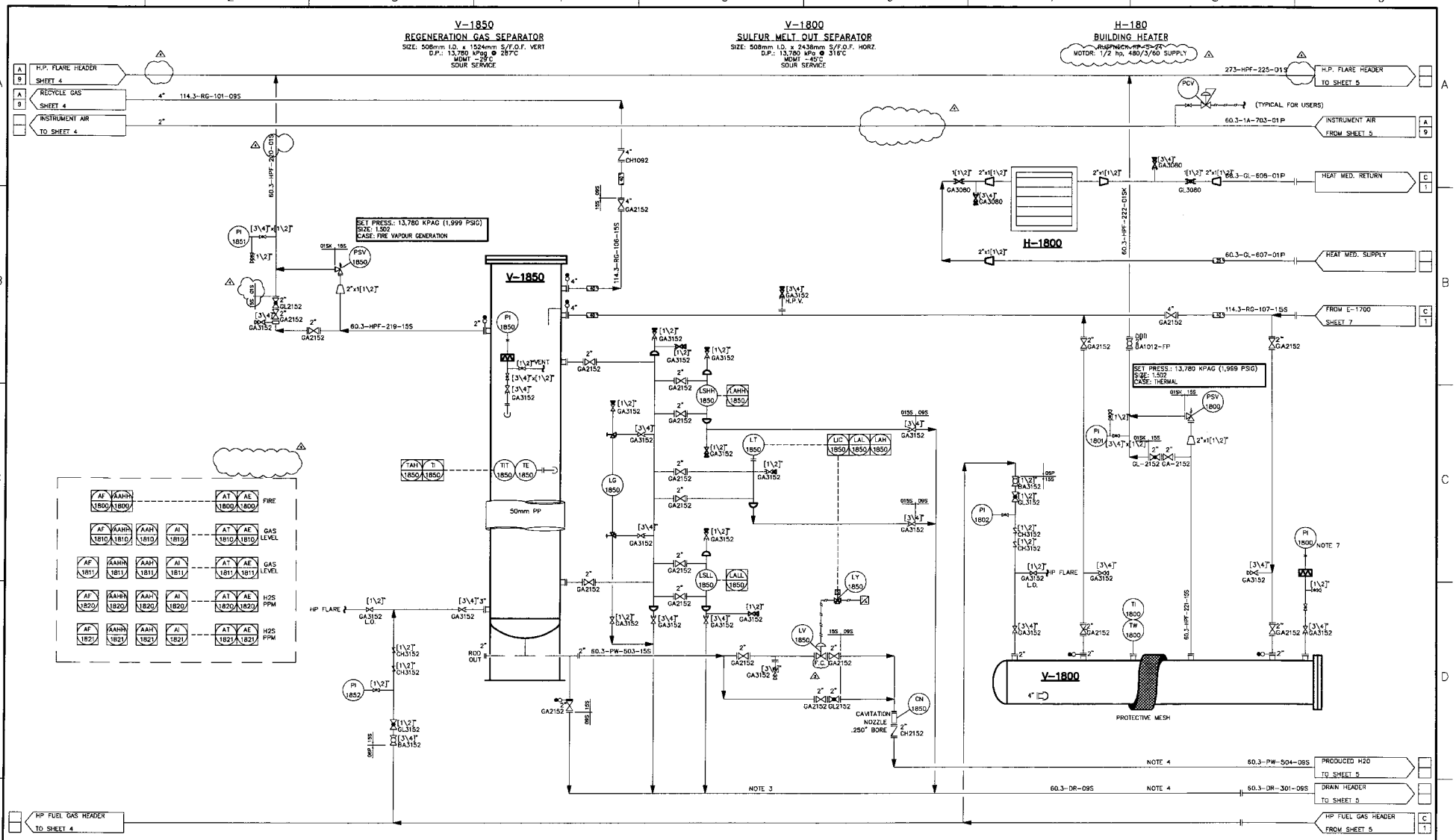

TAG	DESCRIPTION	SIZE-RATING	PIPE SPEC.	TAG	DESCRIPTION	SIZE-RATING	PIPE SPEC.

CUSTOMER CONNECTIONS

GENERAL NOTES:

1. PIPING DESIGNED TO ASME CODE B31.3 – 2002 EDITION, – ADDENDA
2. INSTRUMENT AIR TUBING TO BE [3\8]" DIAMETER 0.035" WT 316SS PROCESS IMPULSE AND DRAIN TUBING TO BE [1\2]" DIAMETER 0.049" WT, FITTINGS TO BE 316SS SWAGELOK [C\W] SS FERRULES.
3. DRAIN LINES AND PRODUCED WATER LINES TO BE INCREASED TO SCH 160 FOR CORROSION PROTECTION.
4. POCKET ALL LIQUID/DRAIN LINES INSIDE BUILDING.
5. TUBE PURGE FROM FUEL GAS WITH 1/2" .049" WT.
6. TUBE PROCESS VENTS TO HP FLARE WITH 3/8" .035" WT.
7. MOUNT PI OUTSIDE BUILDING WALL VISIBLE FROM VESSEL CLOSURE

REV	DATE	REV BY	CHK'D BY	APP'D BY	DESCRIPTION
4	04/04/05	JL	.	.	REVISED AS PER CUSTOMER REQUEST
3	03/24/05	JN	.	.	REVISED AS NOTED
2	03/16/05	CES	CES	RM	REVISED AS NOTED
1	02/02/05	JL	CES	RM	REVISED AS PER CUSTOMER REQUEST
0	01/14/05	JL	CES	RM	ISSUED FOR CONSTRUCTION
C	11/25/04	JL	.	.	REVISED PER CLIENT COMMENTS

REVISIONS

This drawing is the property of NATCO CANADA Ltd. and is lent to the recipient for his confidential use only. In consideration of the loan of this drawing, the recipient promises and agrees that it shall not use used in any way detrimental to the interests of NATCO CANADA Ltd., that it shall be returned upon request, and that it shall not be reproduced copied, lent or otherwise disposed of, directly or indirectly, without the written approval of NATCO CANADA Ltd.

NATCO CANADA

CALGARY ALBERTA CANADA

TITLE: PROCESS AND MECHANICAL FLOWSHEET FOR REGENERATION GAS SEPERATOR

CUSTOMER: CONOCOPHILLIPS

LOCATION: SHERMAN 6-3-62-12 W6M

DRAWN: JAY L. | ENG: ROO M. | DATE: 11/02/04 | SCALE: N.T.S.

CUST. REF. NO.: – | SHOP ORDER NO.: 8267 | UNITS REQ'D: 1 | DWG. NO.: D-8267-01 Sheet 6 of 8 | REV: 4

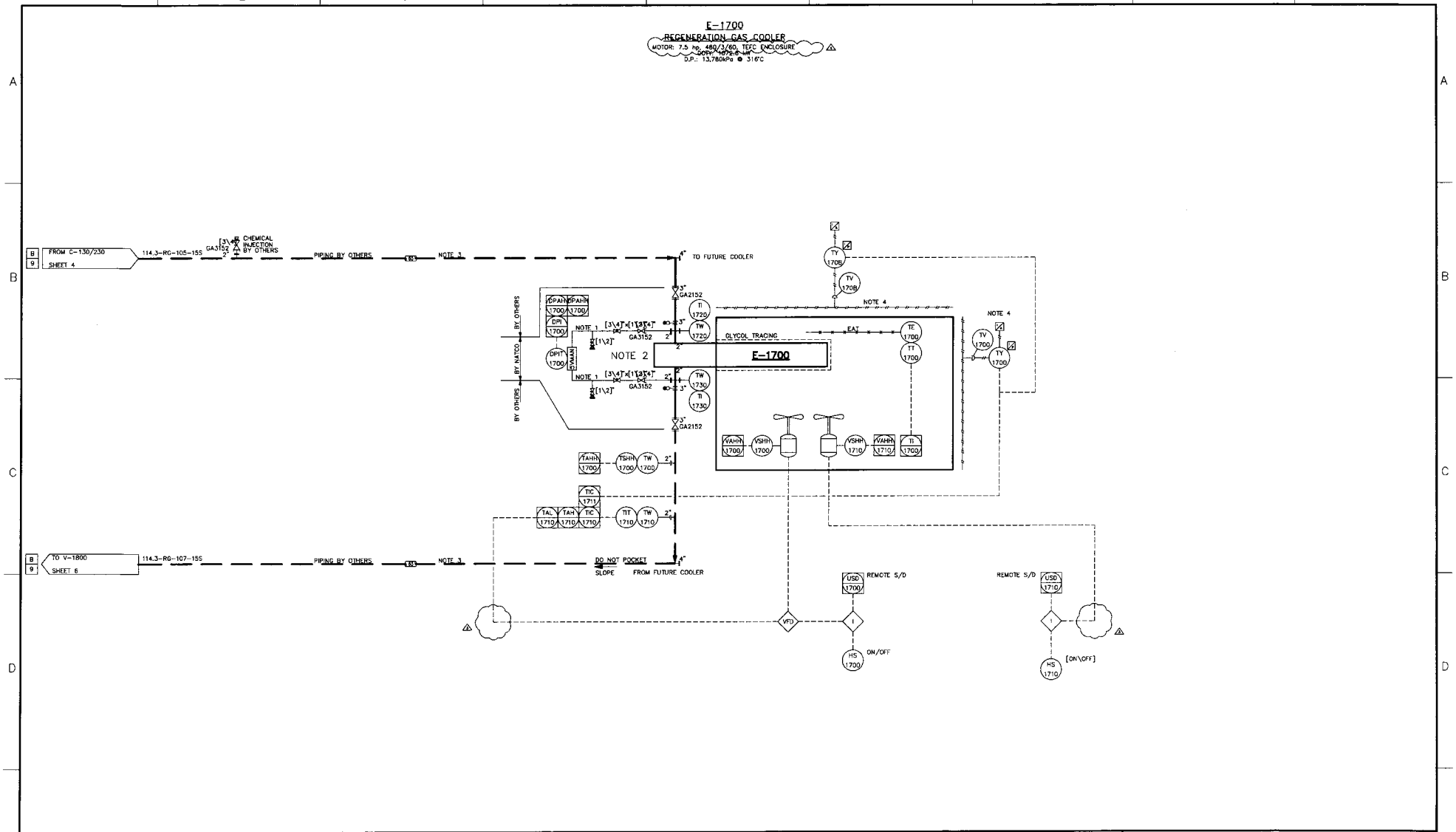

TAG	DESCRIPTION	SIZE-RATING	PIPE SPEC.	TAG	DESCRIPTION	SIZE-RATING	PIPE SPEC.

CUSTOMER CONNECTIONS

GENERAL NOTES:

1. INSTRUMENT AIR TUBING TO BE [3\8]" DIAMETER 0.035" WT 316SS PROCESS IMPULSE AND DRAIN TUBING TO BE [1\2]" DIAMETER 0.049" WT, FITTINGS TO BE 316SS SWAGELOK [C\W] SS FERRULES.
2. TOP INLET, BOTTOM OUTLET, NO TRAPS.
3. ------ INDICATES SUPPLIED BY OTHERS. NATCO WILL SUPPLY INSTRUMENTATION AS SHIPPED LOOSE ITEMS ON INTERCONNECTING PIPE.
4. ENCLOSE LINKAGE ON COOLER LOUVERS TO PREVENT ICE BUILD UP.

REV	DATE	DRN BY	CHK'D BY	APP'D BY	DESCRIPTION
4	04/04/05	JL	.	.	REVISED AS PER CUSTOMER REQUEST
3	03/24/05	JN	.	.	REVISED AS NOTED
2	03/16/05	CES	CES	RM	REVISED INSULATION
1	02/04/05	JL	CES	RM	REVISED AS PER CUSTOMER REQUEST
0	01/14/05	JL	CES	RM	ISSUED FOR CONSTRUCTION
C	11/25/04	JL	.	.	REVISED PER CLIENT COMMENTS

REVISIONS

This drawing is the property of NATCO CANADA Ltd. and is lent to the recipient for his confidential use only, in consideration of the loan of this drawing, the recipient promises and agrees that it shall not use said in any way detrimental to the interests of NATCO CANADA Ltd., that it shall be returned upon request, and that it shall not be reproduced copied, lent or otherwise disposed of, directly or indirectly, without the written approval of NATCO CANADA Ltd.

NATCO CANADA

CALGARY ALBERTA CANADA

TITLE: **PROCESS AND MECHANICAL FLOWSHEETS FOR REGENERATION GAS COOLER**

CUSTOMER: **CONOCOPHILLIPS**

LOCATION: **SHERMAN 6-3-62-12 W6M**

DRAWN: JAY L. | DATE: 11/02/04
ENG: ROD M. | SCALE: N.T.S.

CUST. REF. NO.: –
S-OF ORDER NO.: 8267
UNITS REQ'D: 1
DRWG. NO.: D-8267-01 Sheet 7 of 8
REV: 4

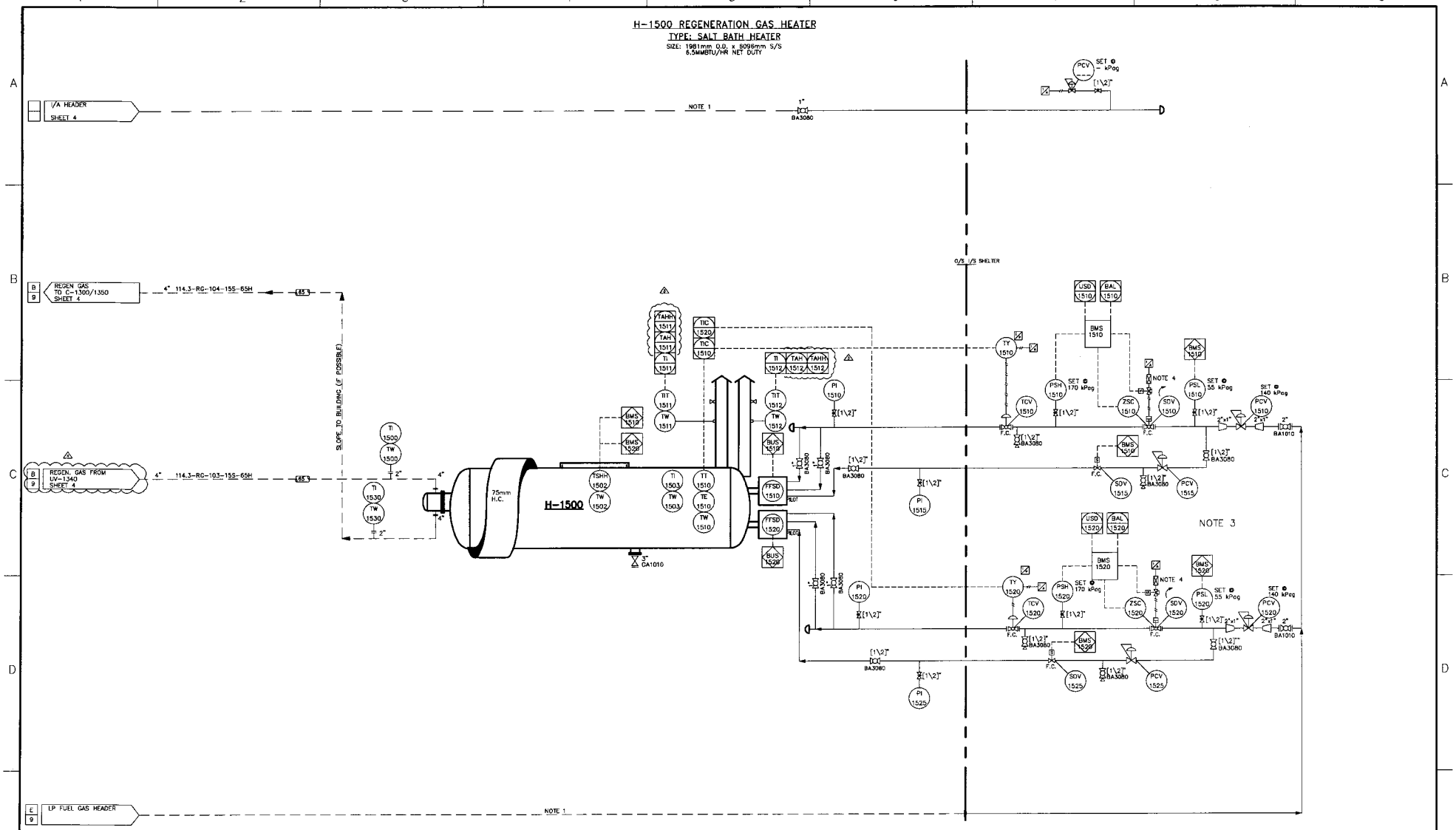

TAG	DESCRIPTION	SIZE-RATING	PIPE SPEC.	TAG	DESCRIPTION	SIZE-RATING	PIPE SPEC.

CUSTOMER CONNECTIONS

GENERAL NOTES:

1. ———— INDICATES SUPPLIED BY OTHERS. NATCO WILL SUPPLY INSTRUMENTATION AS SHIPPED LOOSE ITEMS ON INTERCONNECTING PIPE.
2. INSTRUMENT AIR TUBING TO BE [3\8]" DIAMETER 0.035" WT 316SS PROCESS IMPULSE AND DRAIN TUBING TO BE [1\2]" DIAMETER 0.049" WT, FITTINGS TO BE 316SS SWAGELOK [C\W] SS FERRULES.
3. CSA B149.3 COMPLIANT FUEL GAS SYSTEM.
4. SPEED CONTROL DEVICE.

REV	DATE	DWN BY	CHK'D BY	APP'D BY	DESCRIPTION
4	04/04/05	JL	-	-	REVISED AS PER CUSTOMER REQUEST
3	03/24/05	JN	-	-	REV'D SET PRESSURE TO KPAG; AS NOTED
2	03/16/05	CES	CES	RM	NO CHANGES, ISSUED WITH COMPLETE SET OF P&ID'S
1	02/02/05	JL	CES	RM	REVISED AS PER CUSTOMER REQUEST
0	01/14/05	JL	CES	RM	ISSUED FOR CONSTRUCTION
C	11/25/04	JL	-	-	REVISED PER CLIENT COMMENTS

REVISIONS

This drawing is the property of NATCO CANADA Ltd. and is lent to the recipient for his confidential use only. In consideration of the loan of this drawing, the recipient promises and agrees that it shall not use used in any way detrimental to the interests of NATCO CANADA Ltd., that it shall be returned upon request, and that it shall not be reproduced copied, lent or otherwise disposed of, directly or indirectly, without the written approval of NATCO CANADA Ltd.

NATCO CANADA

CALGARY ALBERTA CANADA

TITLE: PROCESS AND MECHANICAL FLOWSHEETS FOR REGENERATION GAS HEATER

CUSTOMER: CONOCOPHILLIPS

LOCATION: SHERMAN 6-3-62-12 W5M

DRAWN: JAY L. | DATE: 11/02/04 | CHK'D: ROD M. | SCALE: N.T.S.

CUST. REF. NO.: – | SHOP ORDER NO.: 8267 | SHTS REQ'D: 1 | DRWG. NO.: D-8267-01 Sheet 8 of 8 | REV: 4

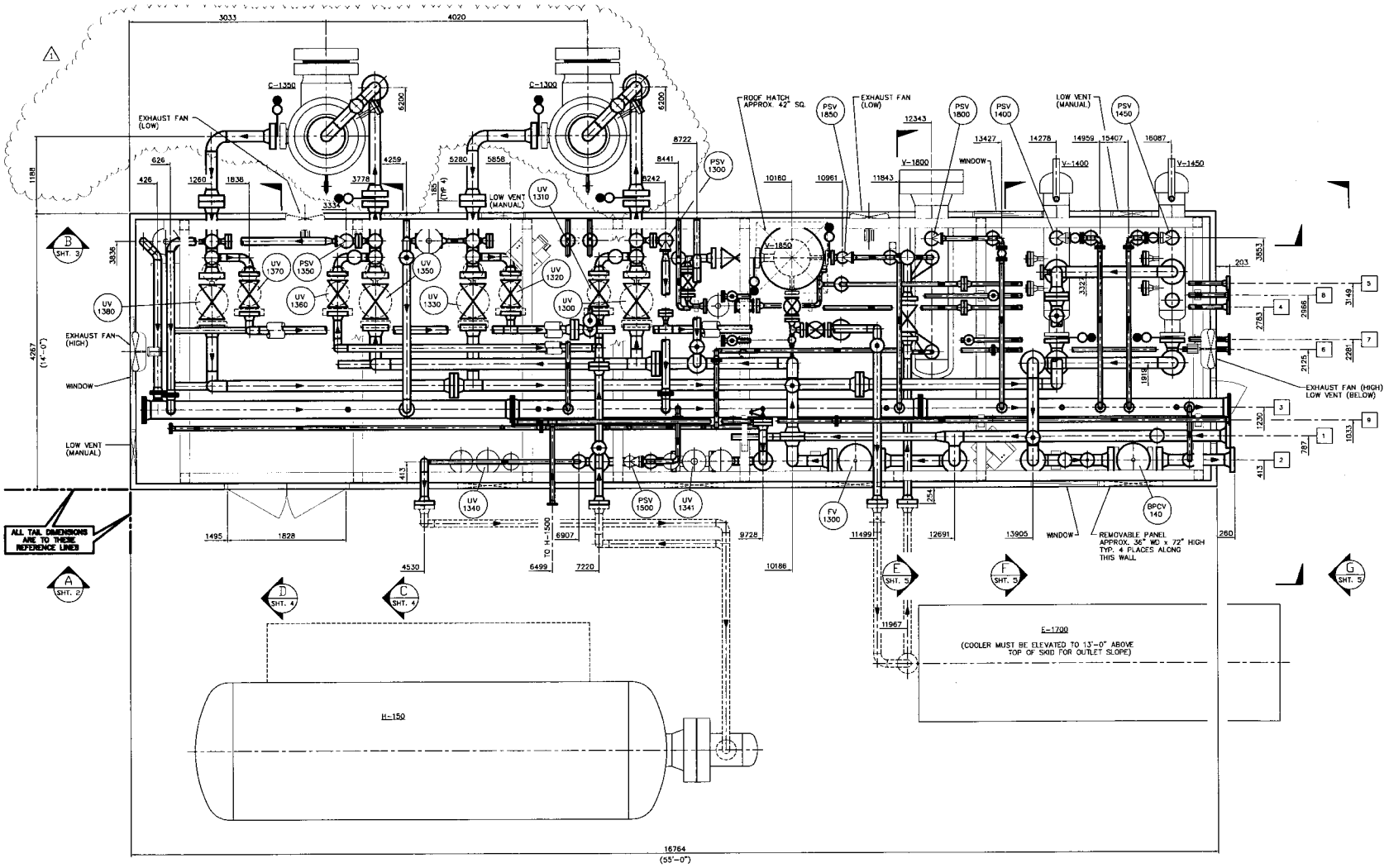

PLAN VIEW

TAG	DESCRIPTION	SIZE-RATING	TAG	DESCRIPTION	SIZE-RATING
9	FUEL GAS HEADER	2"-150# RF			
8	GLYCOL RETURN HEADER	2"-300# RF			
7	GLYCOL SUPPLY HEADER	2"-300# RF			
6	INSTRUMENT AIR HEADER	2"-150# RF			
5	DRAIN HEADER	2"-900# RF			
4	TO TRUCK STATION	2"-900# RF			
3	FLARE HEADER	10"-150# RF			
2	GAS OUTLET	6"-900# RF			
1	GAS INLET	6"-900# RF			

CUSTOMER CONNECTIONS

GENERAL NOTES:

1. PIPING DESIGNED TO ASME CODE B31.3 2002 EDITION, – ADDENDA.
2. UNLESS OTHERWISE INDICATED, SHOP SHALL LOCATE ALL CUSTOMER CONNECTIONS NOT SHOWN ON DRAWING.
3. ALL SKID EDGE DIMENSIONS SHALL HAVE A TOLERANCE OF ± [1\4]" OF THE INDICATED DIMENSIONS.
4. WELD GAP = 2 mm. SHOP TO ADJUST AS REQUIRED.

TOTAL PACKAGE WEIGHT (LBS/Kg):	X LBS. X Kg
TOTAL SHIPPING WEIGHT (LBS/Kg):	X LBS. X Kg

	LENGTH (FT-IN/MM)	WIDTH (FT-IN/MM)	HEIGHT (FT-IN/MM)
OVERALL	–		–
SHIPPING	–		–

OVERALL PACKAGE DIMENSIONS/WEIGHTS

REV	DATE	REV BY	CHK'D BY	APP'D BY	DESCRIPTION
1	05/05/05	CES	·	·	REVISED TOWER LOCATIONS & ADDED SPEC BLINDS
0	01/10/05	CES	CES	RM	ISSUED FOR CONSTRUCTION
A	11/15/04	CES	CES	RM	ISSUED FOR APPROVAL

REVISIONS

This drawing is the property of NATCO CANADA and is lent to the recipient for his confidential use only. In consideration of the loan of this drawing, the recipient promises and agrees that it shall not be used in any way detrimental to the interests of NATCO CANADA, that it shall be returned upon request, and that it shall not be reproduced copied, lent or otherwise disposed of, directly or indirectly, without the written approval of NATCO CANADA.

NATCO CANADA

CALGARY ALBERTA CANADA

TITLE: PIPING & EQUIPMENT GENERAL ARRANGEMENT
MOLE SIEVE

CUSTOMER: CONOCOPHILLIPS

LOCATION: FIELD: SHERMAN
LSD: 6-3-62-12 W6M

DRAWN BY: CURTIS S	ISSUED: 49	DATE: 11/02/04	
CHECKED: ROD M	DRAWN BY: CURTIS S	SCALE: 1:30	
CUST. REF. NO.: ·	CONTRACT NO.: 8267	LAYOUT REQ.: 1	DRAWING NUMBER: D-8267-02A SHT. 1 OF 5
PROD. CODE: ·			REV: 1

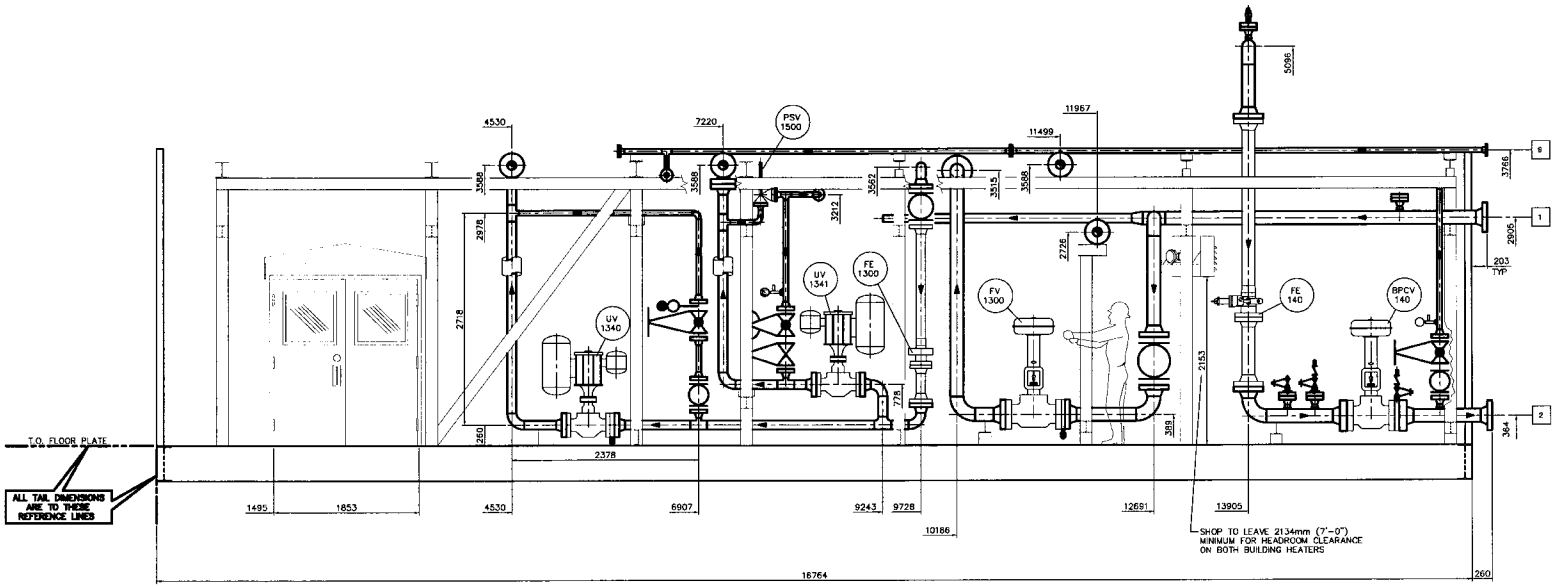

A SHT. 1 SECTION

TAG	DESCRIPTION	SIZE-RATING	TAG	DESCRIPTION	SIZE-RATING
9	FUEL GAS HEADER	2"-150# RF			
8	GLYCOL RETURN HEADER	2"-300# RF			
7	GLYCOL SUPPLY HEADER	2"-300# RF			
6	INSTRUMENT AIR HEADER	2"-150# RF			
5	DRAIN HEADER	2"-900# RF			
4	TO TRUCK STATION	2"-900# RF			
3	FLARE HEADER	10"-150# RF			
2	GAS OUTLET	6"-900# RF			
1	GAS INLET	6"-900# RF	–	–	–

CUSTOMER CONNECTIONS

GENERAL NOTES:

1. PIPING DESIGNED TO ASME CODE B31.3 2002 EDITION, – ADDENDA.
2. UNLESS OTHERWISE INDICATED, SHOP SHALL LOCATE ALL CUSTOMER CONNECTIONS NOT SHOWN ON DRAWING.
3. ALL SKID EDGE DIMENSIONS SHALL HAVE A TOLERANCE OF ± [1\4] OF THE INDICATED DIMENSIONS.
4. WELD GAP = 2 mm. SHOP TO ADJUST AS REQUIRED.
5.

TOTAL PACKAGE WEIGHT (LBS/Kg):	X LBS. X Kg
TOTAL SHIPPING WEIGHT (LBS/Kg):	X LBS. X Kg

DESCRIPTION	LENGTH (FT-IN/MM)	WIDTH (FT-IN/MM)	HEIGHT (FT-IN/MM)
OVERALL	–		–
SHIPPING	–		–

OVERALL PACKAGE DIMENSIONS/WEIGHTS

REV	DATE	DRW'D BY	CHK'D BY	APP'D BY	DESCRIPTION
0	01/10/05	CES	-	-	ISSUED FOR CONSTRUCTION
A	11/15/04	CES	CES	RM	ISSUED FOR APPROVAL

REVISIONS

This drawing is the property of NATCO CANADA and is lent to the recipient for his confidential use only. In consideration of the loan of this drawing, the recipient promises and agrees that it shall not be used in any way detrimental to the interests of NATCO CANADA, that it shall be returned upon request, and that it shall not be reproduced copied, lent or otherwise disposed of, directly or indirectly, without the written approval of NATCO CANADA.

NATCO CANADA

CALGARY ALBERTA CANADA

TITLE: PIPING & EQUIPMENT GENERAL ARRANGEMENT MOLE SIEVE

CUSTOMER: CONOCOPHILLIPS

LOCATION: FIELD: SHERMAN LSD: 6-3-62-12 W6M

DRAWN BY: CURTIS S 149 | DATE: 11/02/04
PLOT SCALE: 1:30
CHECKED BY: ROD M | APP'D BY: CURTIS S

CUST. REF. NO.: -
CONTRACT NO.: 8267
UNITS REQ: 1
DRAWING NUMBER: D-8267-02A
PROD. CODE: -
SHT. 2 OF 5
REV: 0

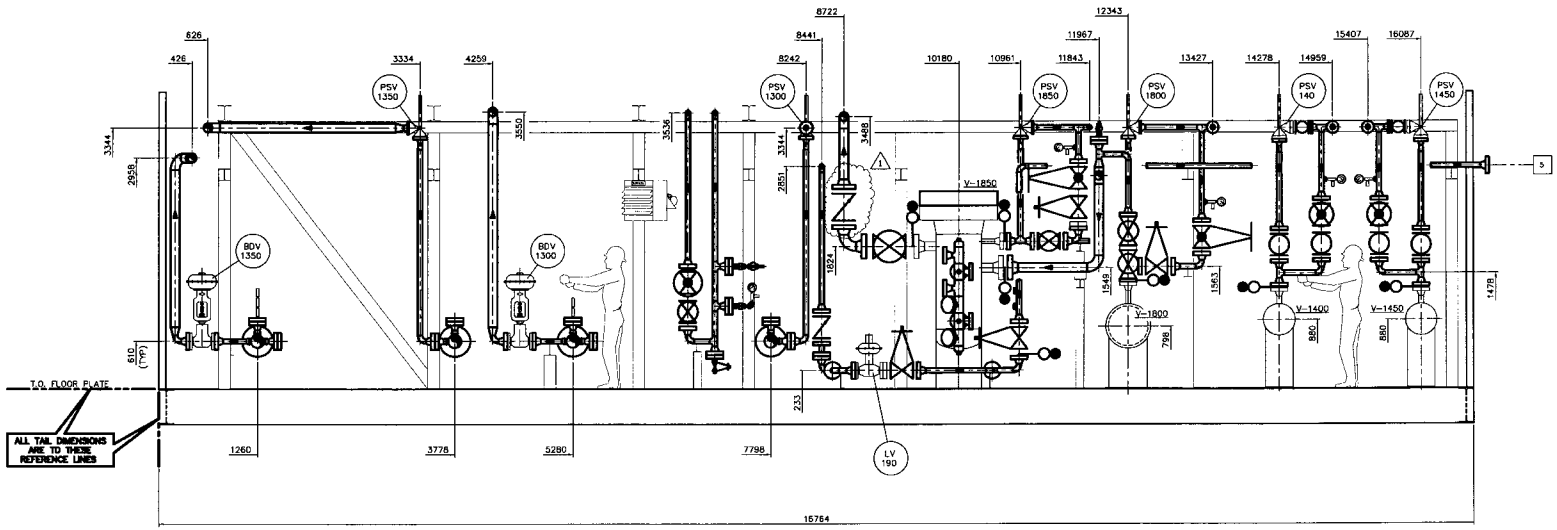

B SHT. 1 SECTION

TAG	DESCRIPTION	SIZE-RATING	TAG	DESCRIPTION	SIZE-RATING
9	FUEL GAS HEADER	2"-150# RF			
8	GLYCOL RETURN HEADER	2"-300# RF			
7	GLYCOL SUPPLY HEADER	2"-300# RF			
6	INSTRUMENT AIR HEADER	2"-150# RF			
5	DRAIN HEADER	2"-900# RF			
4	TO TRUCK STATION	2"-900# RF			
3	FLARE HEADER	10"-150# RF			
2	GAS OUTLET	6"-900# RF			
1	GAS INLET	6"-900# RF	-	-	-

CUSTOMER CONNECTIONS

GENERAL NOTES:

1. PIPING DESIGNED TO ASME CODE B31.3 2002 EDITION, – ADDENDA.
2. UNLESS OTHERWISE INDICATED, SHOP SHALL LOCATE ALL CUSTOMER CONNECTIONS NOT SHOWN ON DRAWING.
3. ALL SKID EDGE DIMENSIONS SHALL HAVE A TOLERANCE OF ± [1\4] OF THE INDICATED DIMENSIONS.
4. WELD GAP = 2 mm. SHOP TO ADJUST AS REQUIRED.
5.

TOTAL PACKAGE WEIGHT (LBS/Kg):	X LBS. X Kg		
TOTAL SHIPPING WEIGHT (LBS/Kg):	X LBS. X Kg		
OVERALL	–		–
SHIPPING	–		–
DESCRIPTION	LENGTH (FT-IN/MM)	WIDTH (FT-IN/MM)	HEIGHT (FT-IN/MM)

OVERALL PACKAGE DIMENSIONS/WEIGHTS

REV	DATE	REV BY	CHK'D BY	APP'D BY	DESCRIPTION
0	01/10/05	CES	·	·	ISSUED FOR CONSTRUCTION
A	11/15/04	CES	CES	RM	ISSUED FOR APPROVAL

REVISIONS

This drawing is the property of NATCO CANADA and is lent to the recipient for his confidential use only. In consideration of the loan of this drawing, the recipient promises and agrees that it shall not be used in any way detrimental to the interests of NATCO CANADA, that it shall be returned upon request, and that it shall not be reproduced copied, lent or otherwise disposed of, directly or indirectly, without the written approval of NATCO CANADA.

NATCO CANADA

CALGARY ALBERTA CANADA

TITLE: PIPING & EQUIPMENT GENERAL ARRANGEMENT
MOLE SIEVE

CUSTOMER: CONOCOPHILLIPS

LOCATION: FIELD: SHERMAN
LSD: 6-3-62-12 W6M

DRAWN BY: CURTIS S	DESIGN: 149	DATE: 11/02/04	
PROJ. MANAGER: ROD M	DRAWN BY: CURTIS S	SCALE: 1:30	
CUST. REF. NO.: ·	CONTRACT NO.: 8267	UNITS REQ: 1	DRAWING NUMBER: · PROD. CODE: D-8267-02A SHT. 3 OF 5	REV: 0

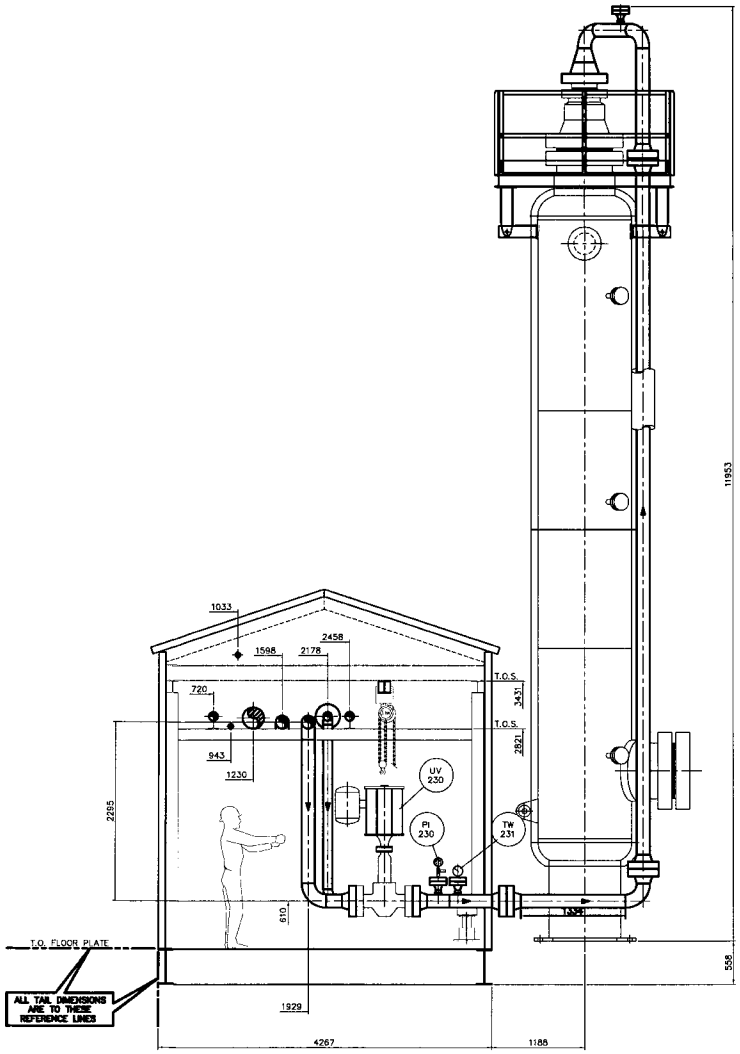

C SHT. 1 SECTION

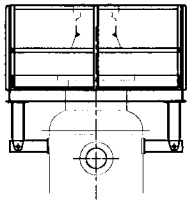

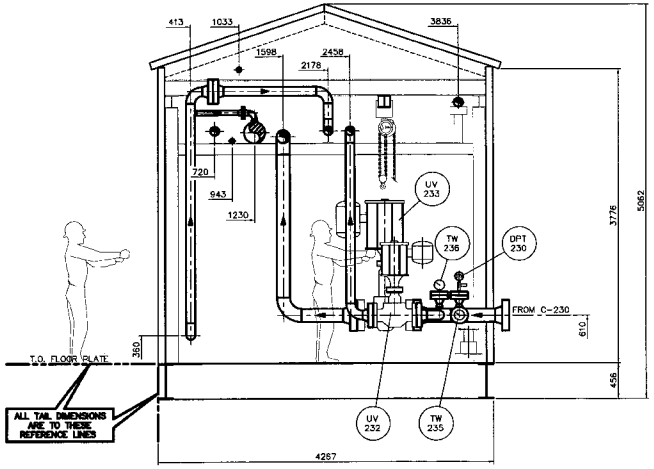

D SHT. 1 SECTION

TAG	DESCRIPTION	SIZE-RATING	TAG	DESCRIPTION	SIZE-RATING
9	FUEL GAS HEADER	2"-150# RF			
8	GLYCOL RETURN HEADER	2"-300# RF			
7	GLYCOL SUPPLY HEADER	2"-300# RF			
6	INSTRUMENT AIR HEADER	2"-150# RF			
5	DRAIN HEADER	2"-900# RF			
4	TO TRUCK STATION	2"-900# RF			
3	FLARE HEADER	10"-150# RF			
2	GAS OUTLET	6"-900# RF			
1	GAS INLET	6"-900# RF	–	–	–

CUSTOMER CONNECTIONS

GENERAL NOTES:

1. PIPING DESIGNED TO ASME CODE B31.3 2002 EDITION, – ADDENDA.
2. UNLESS OTHERWISE INDICATED, SHOP SHALL LOCATE ALL CUSTOMER CONNECTIONS NOT SHOWN ON DRAWING.
3. ALL SKID EDGE DIMENSIONS SHALL HAVE A TOLERANCE OF ± [1\4"] OF THE INDICATED DIMENSIONS.
4. WELD GAP = 2 mm. SHOP TO ADJUST AS REQUIRED.
5.

TOTAL PACKAGE WEIGHT (LBS/Kg):	X LBS. X Kg		
TOTAL SHIPPING WEIGHT (LBS/Kg):	X LBS. X Kg		
OVERALL	–		–
SHIPPING	–		–
DESCRIPTION	LENGTH (FT-IN/MM)	WIDTH (FT-IN/MM)	HEIGHT (FT-IN/MM)

OVERALL PACKAGE DIMENSIONS/WEIGHTS

REV	DATE	REV BY	CHK'D BY	APP'D BY	DESCRIPTION
D	01/10/05	CES	-	-	ISSUED FOR CONSTRUCTION
A	11/15/04	CES	CES	RM	ISSUED FOR APPROVAL

REVISIONS

This drawing is the property of NATCO CANADA and is lent to the recipient for his confidential use only. In consideration of the loan of this drawing, the recipient promises and agrees that it shall not be used in any way detrimental to the interests of NATCO CANADA, that it shall be returned upon request, and that it shall not be reproduced copied, lent or otherwise disposed of, directly or indirectly, without the written approval of NATCO CANADA.

NATCO CANADA

CALGARY ALBERTA CANADA

TITLE: **PIPING & EQUIPMENT GENERAL ARRANGEMENT**
MOLE SIEVE

CUSTOMER: **CONOCOPHILLIPS**

LOCATION: **FIELD: SHERMAN**
LSD: 6-3-62-12 W6M

PREP'D BY: CURTIS S	CHK'D BY: 149		DATE: 11/02/04
PROJ MANAGER: ROD M	DRAWN BY: CURTIS S		SCALE: 1:30
CUST. REF. NO. -	CONTRACT NO. 8267	UNITS REQ. 1	DRAWING NUMBER D-8267-02A SHT. 4 OF 5	REV 0

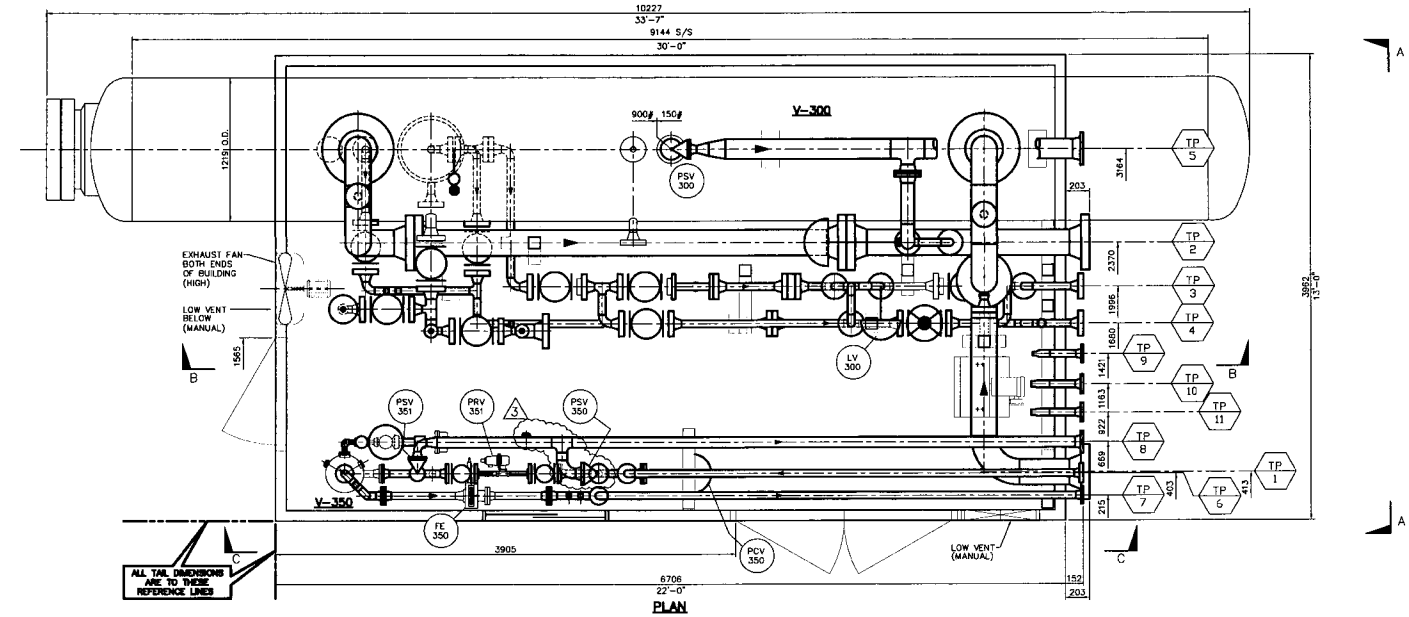

PLAN

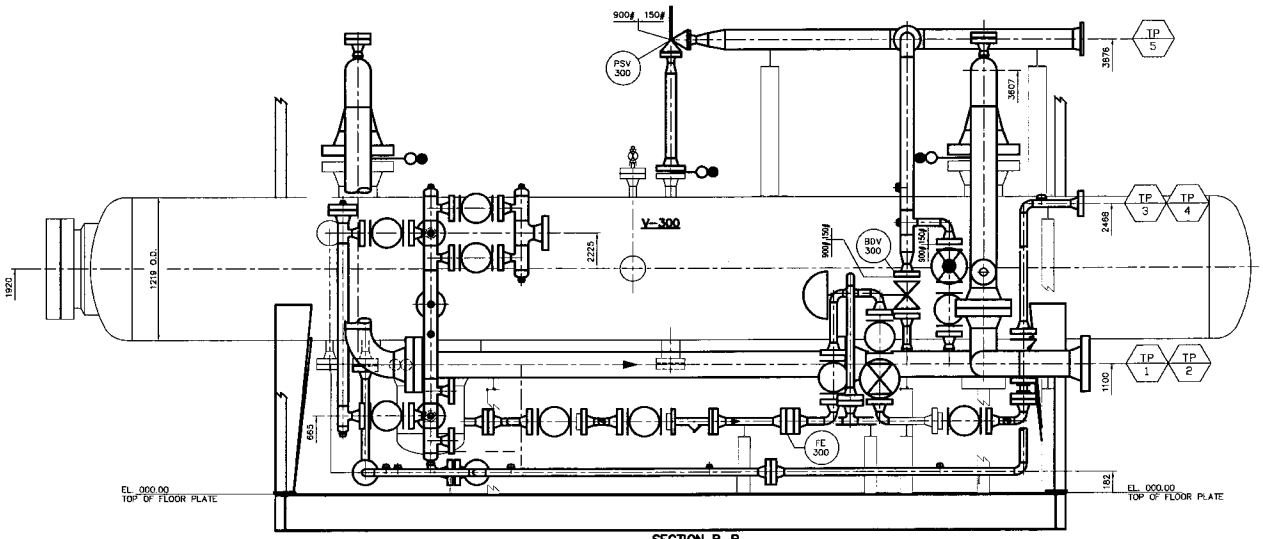

SECTION B-B

TAG	DESCRIPTION	SIZE-RATING	TAG	DESCRIPTION	SIZE-RATING
9	INSTRUMENT AIR	2"-150# RF			
8	SWEET PSV	3"-150# RF			
7	FUEL GAS OUTLET	2"-150# RF			
6	FUEL GAS INLET	2"-600# RF			
5	SOUR PSV	6"-150# RF			
4	DRAIN	2"-900# RF			
3	WATER OUT	2"-900# RF			
2	PRODUCTION GAS	8"-900# RF	11	HEAT MED. RETURN	2"-300# RF
1	INLET	8"-900# RF	10	HEAT MED. SUPPLY	2"-300# RF

CUSTOMER CONNECTIONS

GENERAL NOTES:

1. PIPING DESIGNED TO ASME CODE B31.3 2002 EDITION. - ADDENDA.
2. UNLESS OTHERWISE INDICATED, SHOP SHALL LOCATE ALL CUSTOMER CONNECTIONS NOT SHOWN ON DRAWING.
3. ALL SKID EDGE DIMENSIONS SHALL HAVE A TOLERANCE OF ± [1\4]" OF THE INDICATED DIMENSIONS.
4. WELD GAP = 2 mm. SHOP TO ADJUST AS REQUIRED.
5.

TOTAL PACKAGE WEIGHT (LBS/Kg):	33204 LBS. / 15061 Kg	
TOTAL SHIPPING WEIGHT (LBS/Kg):	33204 LBS. / 15061 Kg	

DESCRIPTION	LENGTH	WIDTH	HEIGHT
OVERALL	33'-7"/10227mm	13'-0"/3962mm	17'-0"/5173mm
SHIPPING	33'-7"/10227mm	13'-0"/3962mm	17'-0"/5173mm

OVERALL PACKAGE DIMENSIONS/WEIGHTS

REV	DATE	DRN'D BY	CHK'D BY	APP'D BY	DESCRIPTION
3	03/24/05	EA	·	·	REVISED AS NOTED
2	03/14/05	EA	CS	RM	REVISED AS NOTED
1	02/14/05	EA	CS	RM	MOVED GLOBE VALVE AND CHANGED POSITION OF LV-300 ON WATER OUTLET LINE FROM V-300, REVISED PIPE SUPPORTS, ADDED LC-350 AND "Y"STRAINER ON FUEL GAS INLET TO V-350.
0	01/07/05	EA	CS	RM	ISSUED FOR CONSTRUCTION
A	11/15/04	EA	CS	RM	ISSUED FOR APPROVAL

REVISIONS

This drawing is the property of NATCO CANADA and is lent to the recipient for his confidential use only. In consideration of the loan of this drawing, the recipient promises and agrees that it shall not be used in any way detrimental to the interests of NATCO CANADA, that it shall be returned upon request, and that it shall not be reproduced copied, lent or otherwise disposed of, directly or indirectly, without the written approval of NATCO CANADA.

NATCO CANADA

CALGARY ALBERTA CANADA

TITLE: **PIPING LAYOUT FOR 48" O.D. x 30'-0" S/S INLET SEPARATOR PACKAGE**

CUSTOMER: **CONOCOPHILLIPS**

LOCATION: **SHERMAN LSD: 6-3-62-12 W6M**

PROJECT ENGRG: ELENA A. | DRAWN: 213 | DATE: 11/02/04
PROJ. MANAGER: ROD M. | DRAWN BY: ELENA A. | SCALE: 1:20

CUST. REF. NO.: - | CONTRACT NO.: 8267 | UNITS REQ.: 1 | DRAWING NUMBER: D-8267-02B SHT. 1 OF 2 | REV: 3

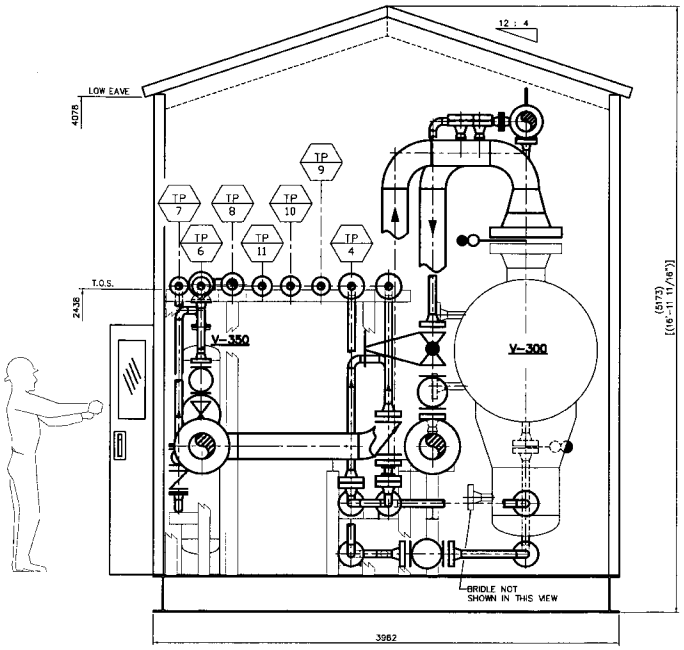

VIEW A-A

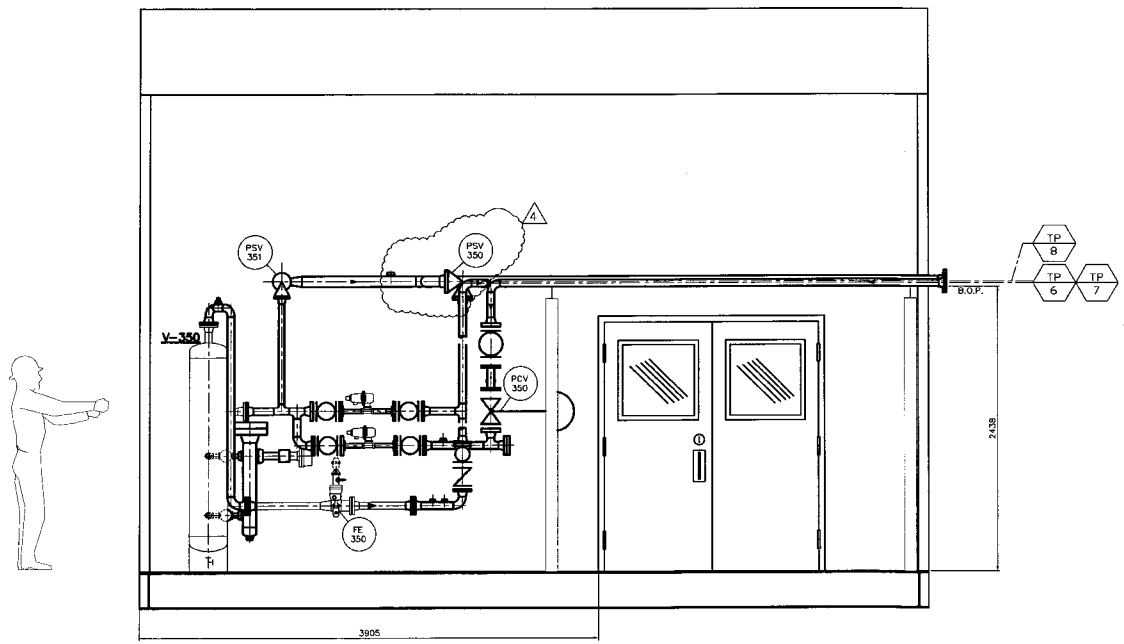

VIEW C-C

TAG	DESCRIPTION	SIZE-RATING	TAG	DESCRIPTION	SIZE-RATING
9	INSTRUMENT AIR	2"-150# RF			
8	SWEET PSV	3"-150# RF			
7	FUEL GAS OUTLET	2"-150# RF			
6	FUEL GAS INLET	2"-600# RF			
5	PSV	6"-150# RF			
4	DRAIN	2"-900# RF			
3	WATER OUT	2"-900# RF			
2	PRODUCTION GAS	8"-900# RF	11	HEAT MED. RETURN	2"-300# RF
1	INLET	8"-900# RF	10	HEAT MED. SUPPLY	2"-300# RF

CUSTOMER CONNECTIONS

GENERAL NOTES:

1. PIPING DESIGNED TO ASME CODE B31.3 2002 EDITION, – ADDENDA.
2. UNLESS OTHERWISE INDICATED, SHOP SHALL LOCATE ALL CUSTOMER CONNECTIONS NOT SHOWN ON DRAWING.
3. ALL SKID EDGE DIMENSIONS SHALL HAVE A TOLERANCE OF ± [1\4] OF THE INDICATED DIMENSIONS.
4. WELD GAP = 2 mm. SHOP TO ADJUST AS REQUIRED.
5.

TOTAL PACKAGE WEIGHT (LBS/Kg):	33204 LBS. / 15061 Kg		
TOTAL SHIPPING WEIGHT (LBS/Kg):	33204 LBS. / 15061 Kg		
OVERALL	33'-7"/10227mm	13'-0"/3962mm	17'-0"/5173mm
SHIPPING	33'-7"/10227mm	13'-0"/3962mm	17'-0"/5173mm
DESCRIPTION	LENGTH	WIDTH	HEIGHT

OVERALL PACKAGE DIMENSIONS/WEIGHTS

REV	DATE	REV BY	CHK'D BY	APP'D BY	DESCRIPTION
4	03/24/05	EA	·	·	REVISED AS NOTED
3	03/14/05	EA	CS	RM	REVISED AS NOTED
2	02/14/05	EA	CS	RM	ADDED LC-350
1	02/03/05	EA	CS	RM	ADDED "Y" STRAINER ON FUEL GAS INLET
0	01/07/05	EA	CS	RM	ISSUED FOR CONSTRUCTION
A	11/15/04	EA	CS	RM	ISSUED FOR APPROVAL

REVISIONS

This drawing is the property of NATCO CANADA and is lent to the recipient for his confidential use only. In consideration of the loan of this drawing, the recipient promises and agrees that it shall not be used in any way detrimental to the interests of NATCO CANADA, that it shall be returned upon request, and that it shall not be reproduced copied, lent or otherwise disposed of, directly or indirectly, without the written approval of NATCO CANADA.

NATCO CANADA

CALGARY ALBERTA CANADA

TITLE: PIPING LAYOUT FOR 48" O.D. x 30'-0" S/S INLET SEPARATOR PACKAGE

CUSTOMER: CONOCOPHILLIPS

LOCATION: SHERMAN LSD: 6-3-62-12 W6M

PROJ. ENGR: ELENA A. DESIGN: 213 DATE: 11/02/04
PROJ. MANAGER: ROD M. DRAWN BY: ELENA A. SCALE: 1:20

CUST. REF. NO.: · CONTRACT NO.: 8267 UNITS REQ.: 1 DRAWING NUMBER: · D-8267-02B PROD. CODE: SHT 2 OF 2 REV: 4

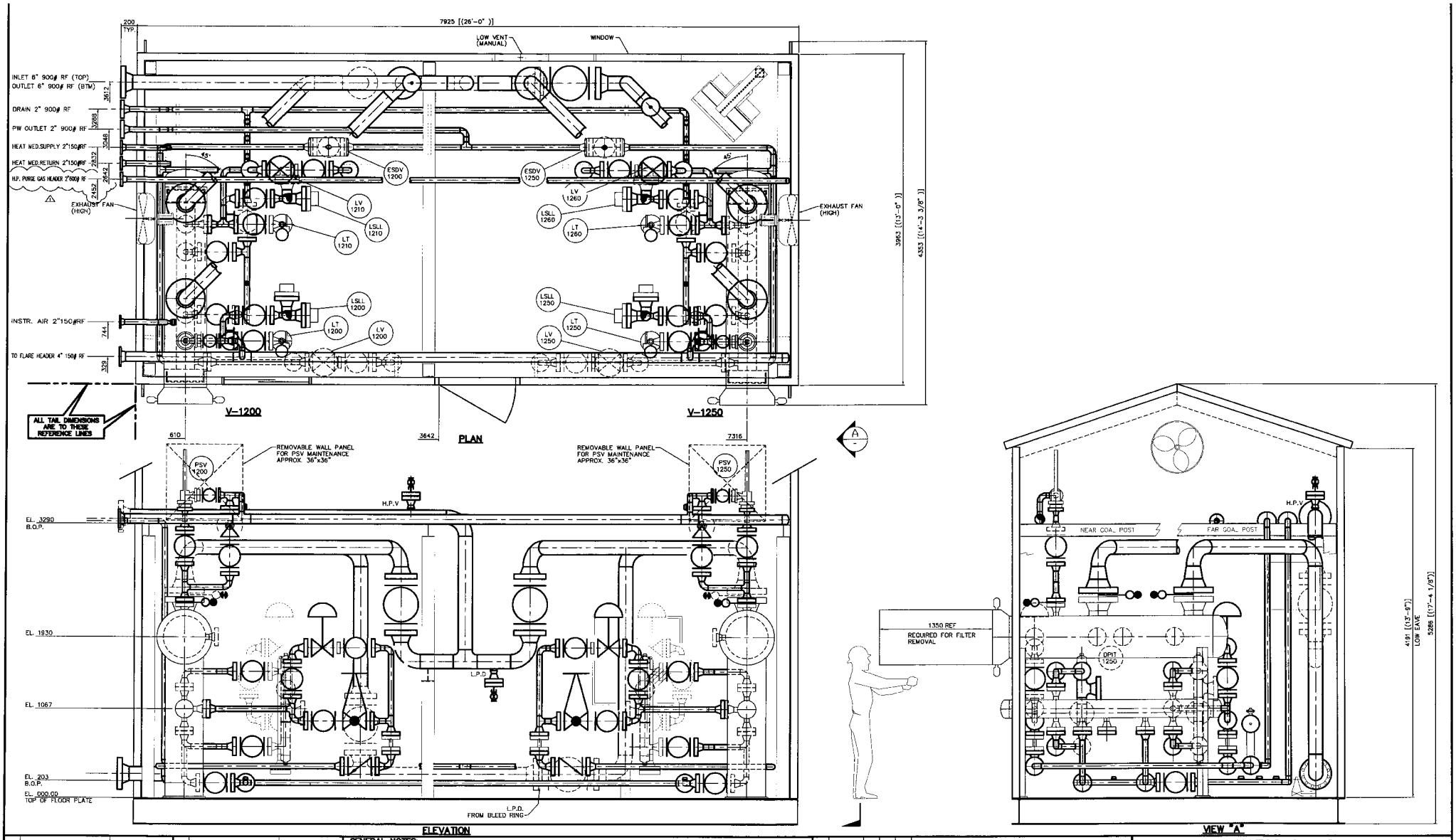

TAG	DESCRIPTION	SIZE-RATING	TAG	DESCRIPTION	SIZE-RATING
-	-	-	-	-	-

CUSTOMER CONNECTIONS

GENERAL NOTES:

1. PIPING DESIGNED TO ASME CODE B31.3 2002 EDITION, – ADDENDA.
2. UNLESS OTHERWISE INDICATED, SHOP SHALL LOCATE ALL CUSTOMER CONNECTIONS NOT SHOWN ON DRAWING.
3. ALL SKID EDGE DIMENSIONS SHALL HAVE A TOLERANCE OF ± [1\4"] OF THE INDICATED DIMENSIONS.
4. WELD GAP = 2 mm. SHOP TO ADJUST AS REQUIRED.
5.

TOTAL PACKAGE WEIGHT (LBS/Kg):	40500 LBS. 18370 Kg		
TOTAL SHIPPING WEIGHT (LBS/Kg):	T.B.C. LBS. X Kg		
OVERALL	26'– 8" / 8125mm	14'–4" / 4369mm	15'–10" / 4826mm
SHIPPING	–	–	–
DESCRIPTION	LENGTH (FT–IN/MM)	WIDTH (FT–IN/MM)	HEIGHT (FT–IN/MM)

PRELIMINARY PRIOR TO DRAWING ISSUE

OVERALL PACKAGE DIMENSIONS/WEIGHTS

REV	DATE	DRN	CHK'D	APP'D	DESCRIPTION
1	03/16/05	JN	-	-	ADDED H.P. PURGE GAS HEADER
0	01/12/05	CES	-	-	ISSUED FOR CONSTRUCTION
A	11/15/04	FW	-	-	ISSUED FOR APPROVAL

REVISIONS

This drawing is the property of NATCO CANADA and is lent to the recipient for his confidential use only. In consideration of the loan of this drawing, the recipient promises and agrees that it shall not be used in any way detrimental to the interests of NATCO CANADA, that it shall be returned upon request, and that it shall not be reproduced copied, lent or otherwise disposed of, directly or indirectly, without the written approval of NATCO CANADA.

NATCO CANADA

CALGARY ALBERTA CANADA

TITLE: INLET FILTER COALESCER SKID PACKAGE

CUSTOMER: CONOCO PHILLIPS

LOCATION: SHERMAN LSD: 6–3–62–12 W6M

DRAWN: FRANK W. DATE: 11/09/04

PROJ. MANAGER: ROD M. DRAWN BY: FRANK W.

CUST. REF. NO.: -

CONTRACT NO.: 8267

UNITS REQ.: 1

DRAWING NUMBER: D–8267–02C

PROC. CODE: -

SHT. 1 OF 1

REV: 1

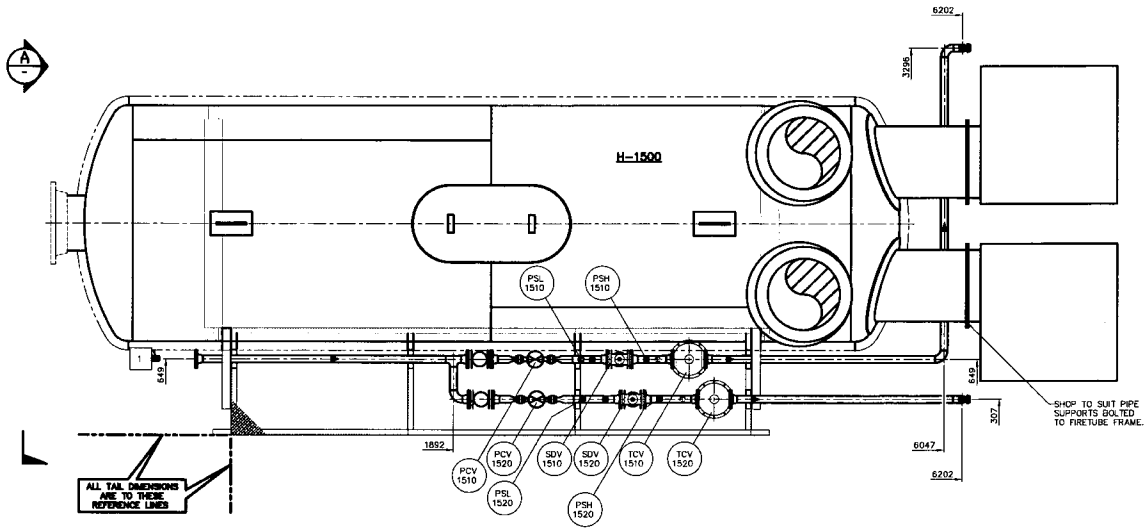

PLAN VIEW

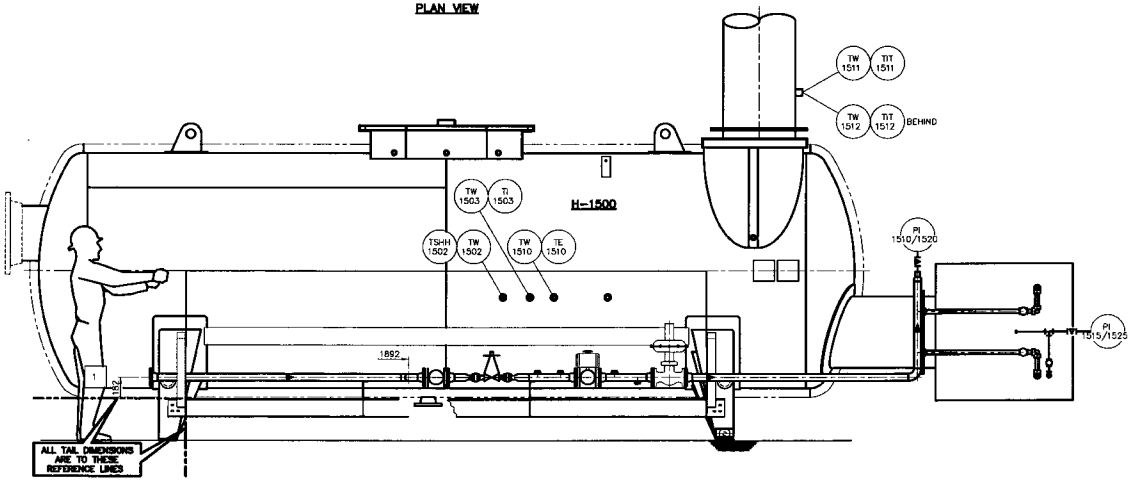

ELEVATION VIEW

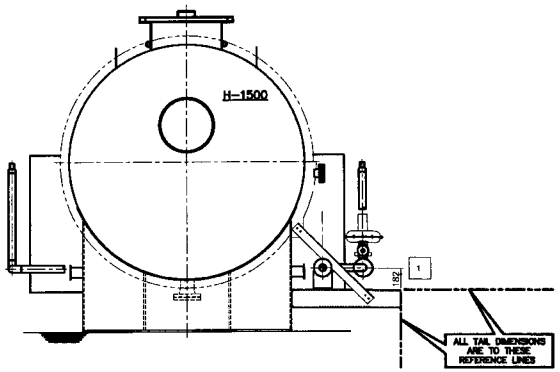

SECTION 'A'

TAG	DESCRIPTION	SIZE-RATING	TAG	DESCRIPTION	SIZE-RATING
1	FUEL GAS HEADER INLET	2"-150# RF	-	-	-

CUSTOMER CONNECTIONS

GENERAL NOTES:

1. PIPING DESIGNED TO ASME CODE B31.3 2002 EDITION, – ADDENDA.
2. UNLESS OTHERWISE INDICATED, SHOP SHALL LOCATE ALL CUSTOMER CONNECTIONS NOT SHOWN ON DRAWING.
3. ALL SKID EDGE DIMENSIONS SHALL HAVE A TOLERANCE OF ± [1\4] OF THE INDICATED DIMENSIONS.
4. WELD GAP = 2 mm. SHOP TO ADJUST AS REQUIRED.

5.

TOTAL PACKAGE WEIGHT (LBS/Kg):	33,500 LBS.	15,227 Kg	
TOTAL SHIPPING WEIGHT (LBS/Kg):	33,500 LBS.	15,227 Kg	
OVERALL	31'-0"/9449	11'-0"/3353	9'-0"/2743
SHIPPING	31'-0"/9449	11'-0"/3353	9'-0"/2743
DESCRIPTION	LENGTH (FT-IN/MM)	WIDTH (FT-IN/MM)	HEIGHT (FT-IN/MM)

OVERALL PACKAGE DIMENSIONS/WEIGHTS

REV	DATE	REV BY	CHK'D BY	APP'D BY	DESCRIPTION
0	04/05/05	JN	-	-	ISSUED FOR CONSTRUCTION
A	03/30/05	JN	-	-	ISSUED FOR APPROVAL

REVISIONS

This drawing is the property of NATCO CANADA and is lent to the recipient for his confidential use only. In consideration of the loan of this drawing, the recipient promises and agrees that it shall not be used in any way detrimental to the interests of NATCO CANADA, that it shall be returned upon request, and that it shall not be reproduced copied, lent or otherwise disposed of, directly or indirectly, without the written approval of NATCO CANADA.

NATCO CANADA

CALGARY ALBERTA CANADA

TITLE: PIPING & EQUIPMENT GENERAL ARRANGEMENT
SALT BATH HEATER

CUSTOMER: CONOCOPHILLIPS

LOCATION: FIELD: SHERMAN
LSD: 8-3-62-12 W6M

DRAWN BY: CURTIS S.	CHECKED BY: 49	DATE: 03/29/05	
PROJ. MANAGER: ROD M.	DRAWN BY: JEREMY N.	SCALE: 1:20	
CUST. REF. NO.: -	CONTRACT NO.: 8267	CURTIS REG.: 1	DRAWING NUMBER: D-8267-02D
PROD. CODE:	SHT. 1 OF 1	REV: 0	

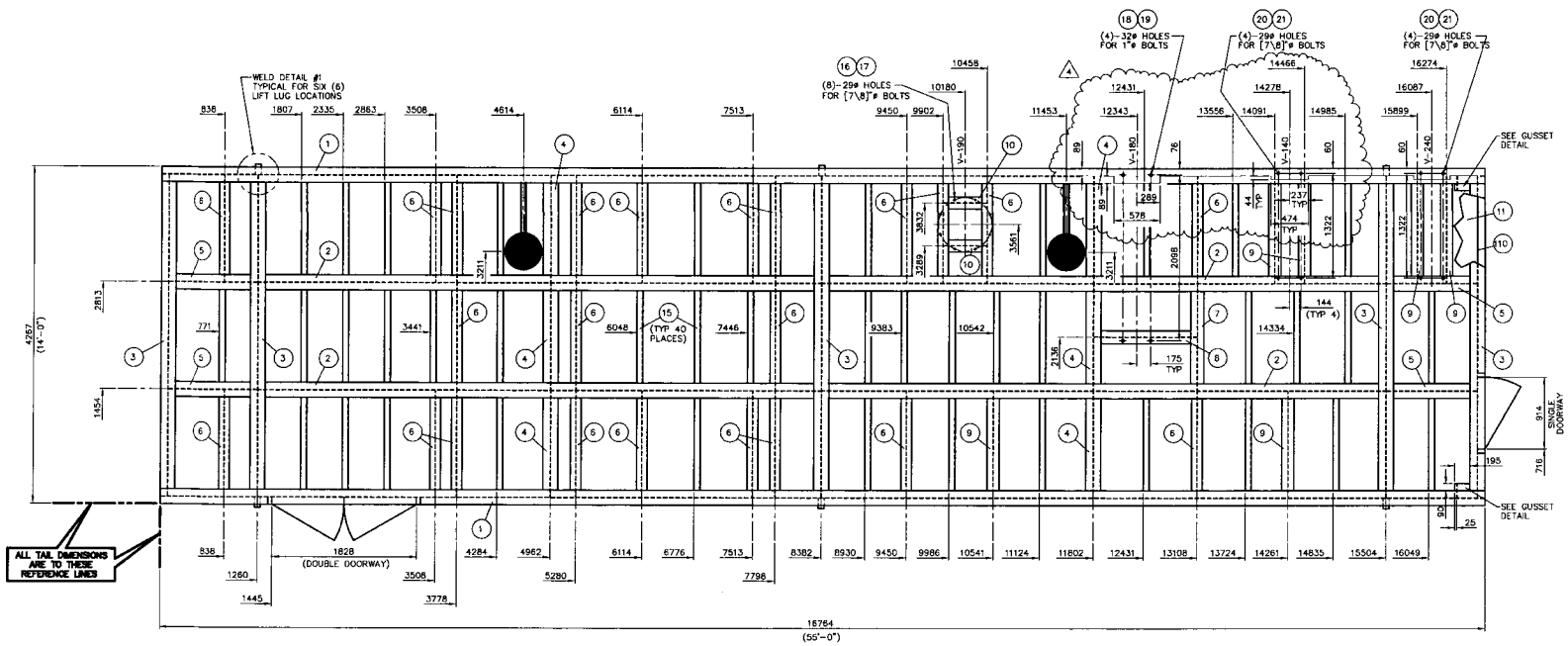

PLAN VIEW

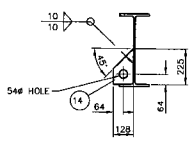

LIFT LUG DETAIL
SCALE: 1:15
(6 REQ'D)

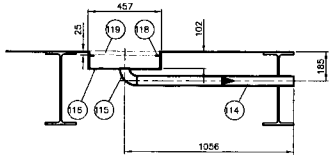

FLOOR DRAIN DETAIL
SCALE: 1:15
(2 REQ'D)

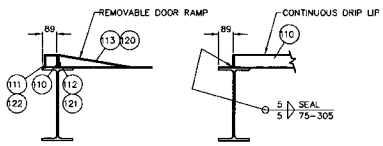

NOTE: ITEMS 120, 121, 122 ARE FOR THE DOUBLE DOOR RAMP

TYP. DOOR/DRIP LIP DETAIL
SCALE: 1:15
(1 SINGLE & 1 DOUBLE DOORWAY REQ'D)

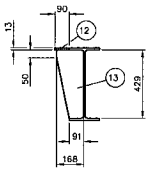

GUSSET DETAIL
SCALE: 1:15
(2 REQ'D)

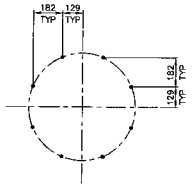

V-190 BOLT PATTERN DETAIL
SCALE: 1:15

MATERIAL LIST

ITEM	QTY	PART/COMP. No.	DESCRIPTION	MATERIAL
1	2		WIDE FLANGE 18.00" @ 41# 16764	G40/50W
2	4		WIDE FLANGE 18.00" @ 41# 7113	G40/50W
3	5		WIDE FLANGE 18.00" @ 41# 4068	G40/50W
4	6		WIDE FLANGE 18.00" @ 41# 1350	G40/50W
5	4		WIDE FLANGE 18.00" @ 41# 1156	G40/50W
6	23		WIDE FLANGE 8.00" @ 18# 1350	G40/50W
7	1		WIDE FLANGE 12.00" @ 26# 1350	G40/50W
8	1		WIDE FLANGE 12.00" @ 26# 1298	G40/50W
9	6		WIDE FLANGE 6.00" @ 15# 1350	G40/50W
10	2		WIDE FLANGE 6.00" @ 15# 550	G40/50W
11	1		PLATE 0.250" THK CHECKERPLATE 4267 x 16764	SA36
12	2		PLATE 0.500" THK 90 x 195	SA36
			SHOP CUT TO SUIT	
13	2		PLATE 0.500" THK 168 x 429	SA36
			SHOP CUT TO SUIT	
14	6		PLATE 1.500" THK 128 x 225	SA51670N
			SHOP CUT TO SUIT	
15	40		ANGLE 3.00" X 3.00" X 0.250" 1169	SA36/44W
16	8		0.875 HX HD BOLT x 3.00" LG	A325
17	8		0.875 NUTS	A325
18	4		1.00 HX HD BOLT x 3.50" LG	A325
19	4		1.00 NUTS	A325
20	8		0.875 HX HD BOLT x 3.00" LG	A325
21	8		0.875 NUTS	A325
110	1		BAR FLAT 3.0000" x 0.2500" 43000	SA36
			SHOP CUT TO SUIT	
111	1		ANGLE 3.00" X 3.00" X 0.250" 914	SA36/44W
112	1		BAR FLAT 1.0000" x 0.2500" 900	SA36
113	1		CHECKERPLATE 0.2500" THICK 914 x 686	SA36/44W
			BEND TO SUIT DETAIL	
114	2		PIPE 2.000" XH SMLS 980	SA106B
			THREAD 2" NPT ONE END (SHOP CUT TO SUIT)	
115	2		ELL WELD 2" XH LR 90	SA234WPB
116	2		PLATE 0.2500" THICK NORM 437 x 437	SA36/44W
			RING CUT TO 437 OD x 60 ID	
117	2		PIPE ERW 18.000" 0.250" WALL 102	SA53B
118	2		PLATE 0.2500" THICK NORM 437 x 437	SA36/44W
			RING CUT TO 437 OD x 387 ID	
119	2		GRATING TYPE 19-4 1.00" x 3/16" 450 x 450	
			CUT TO 437 DIA. GALVANIZED	
120	1		CHECKERPLATE 0.2500" THICK 1828 x 686	SA36/44W
			BEND TO SUIT DETAIL	
121	1		BAR FLAT 1.0000" x 0.2500" 1800	SA36
122	1		ANGLE 3.00" X 3.00" X 0.250" 1828	SA36/44W

1. ALL FILLET WELDS TO BE 1/4" UNLESS OTHERWISE NOTED.
2. ALL MEMBERS ARE TO BE FLUSH WITH THE TOP OF SKID, UNLESS OTHERWISE NOTED.
3. SEE PAINTING SCHEDULE 8267-90.
4. SEE INSULATION SCHEDULE 8267-92.
5. INSULATE UNDERSIDE OF SKID WITH 3" FIRE RETARDANT SPRAY ON FOAM INSULATION.

SKID WEIGHT	
WEIGHT OF STEEL (LBS/Kg)	40375 LBS / 18352 Kg
WEIGHT OF BUILDING (LBS/Kg) @ 3.5 LBS/Sq.FT	9270 LBS / 4214 Kg
TOTAL WEIGHT (LBS/Kg)	49645 LBS / 22566 Kg

REV	DATE	REV BY	CHK'D BY	APP'D BY	DESCRIPTION
4	12/20/04	CES	-	-	ADDED DRIP LIP DIMENSIONS FOR AROUND SADDLES
3	12/10/04	CES	-	-	ADDED LIFT LUG BOLT HOLE SIZE
2	12/07/04	CES	-	-	ADDED LIFT LUG WELD DETAIL
1	12/03/04	CES	-	-	REVISED LOCATION OF V-190 BEAMS
0	11/30/04	CES	-	-	ISSUED FOR CONSTRUCTION

REVISIONS

This drawing is the property of NATCO CANADA and is lent to the recipient for his confidential use only, in consideration of the loan of this drawing, the recipient promises and agrees that it shall not be used in any way detrimental to the interests of NATCO CANADA, that it shall be returned upon request, and that it shall not be reproduced copied, lent or otherwise disposed of, directly or indirectly, without the written approval of NATCO CANADA.

FULL SIZE CONNECTION	FULL SIZE CONNECTION	FULL SIZE CONNECTION	REDUCED CONNECTION	FLOOR SUPPORT FULL COPE	FLOOR SUPPORT NO COPE	FLOOR PLATE TO SKID CONNECTION	FLOOR PLATE SEAMS	TYPICAL BOLTING	-
1	2	3	4	5	6	7	8	9	10
LIFT LUG LOCATIONS ONLY	-	-	-	-	-	-	UNLESS OTHERWISE NOTED	-	-

NATCO CANADA

CALGARY ALBERTA CANADA

TITLE: STRUCTURAL STEEL LAYOUT
MOLE SIEVE

CUSTOMER: CONOCOPHILLIPS

LOCATION: FIELD: SHERMAN
LSD: 6-3-62-12 W6M

PROJ. CODE: CURTIS S | DRAWN: 149 | DATE: 11/18/04
DESIGN: ROD M | DRAWN BY: CURTIS S | SCALE: 1:30

CUST. REF. NO.: - | CONTRACT NO.: 8267 | UNITS REQ: 1 | DRAWING NUMBER: D-8267A-04 SHT. 1 OF 4 | PROD. CODE: - | REV: 4

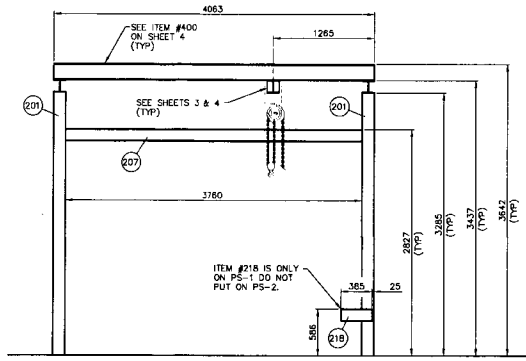

PS-1, PS-2
(2 REQ'D)
(LOOKING WEST)

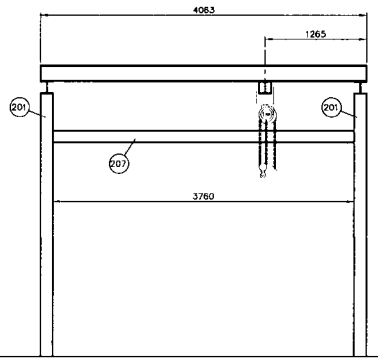

PS-3
(1 REQ'D)
(LOOKING WEST)

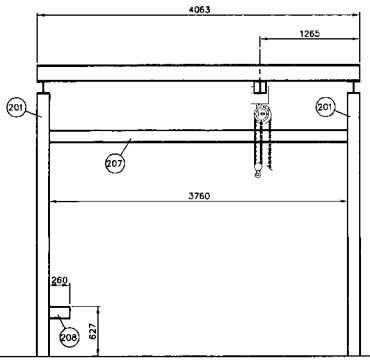

PS-4
(1 REQ'D)
(LOOKING WEST)

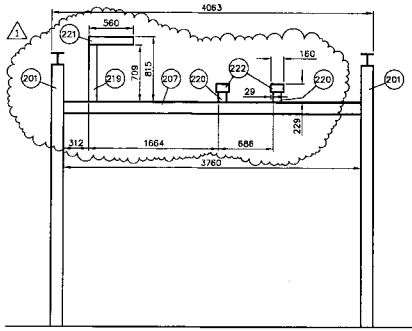

PS-5
(1 REQ'D)
(LOOKING WEST)

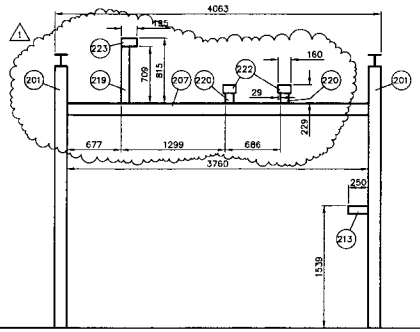

PS-6
(1 REQ'D)
(LOOKING WEST)

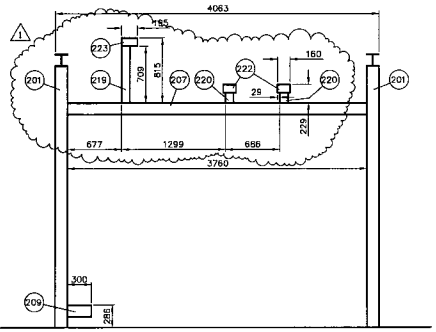

PS-7
(1 REQ'D)
(LOOKING WEST)

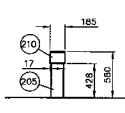

PS-8
(1 REQ'D)

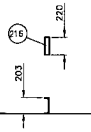

PS-9, PS-10
(2 REQ'D)

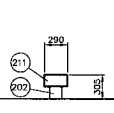

PS-11
(1 REQ'D)

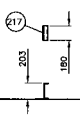

PS-12, PS-13
(2 REQ'D)

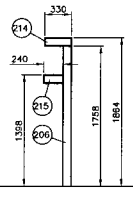

PS-14
(1 REQ'D)

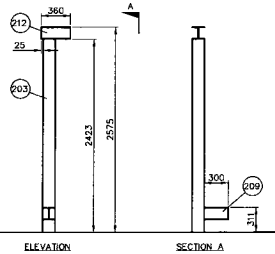

PS-15
(1 REQ'D)

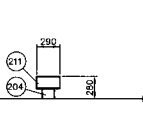

PS-16
(1 REQ'D)

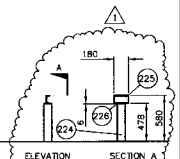

PS-17
(1 REQ'D)

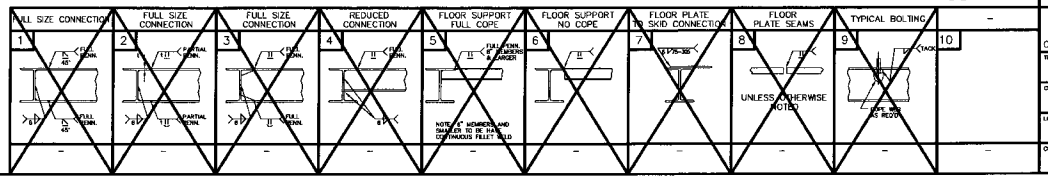

MATERIAL LIST

ITEM	QTY	PART/COMP. No.	DESCRIPTION		MATERIAL
201	14	11426400	HSS 6" X 6" X 1/4" THK	3285	SA350/44W
202	1	11426400	HSS 6" X 6" X 1/4" THK	153	SA350/44W
203	1	11426400	HSS 6" X 6" X 1/4" THK	2423	SA350/44W
204	1	11426400	HSS 6" X 6" X 1/4" THK	128	SA350/44W
205	1	11426400	HSS 6" X 6" X 1/4" THK	428	SA350/44W
206	1	783904008	HSS 4" X 4" X 0.2500" THK	1758	G40.2150W
207	7	22510147	WIDE FLANGE 6.00" @ 15#	3760	G40.2150W
208	1	22510147	WIDE FLANGE 6.00" @ 15#	260	G40.2150W
209	2	22510147	WIDE FLANGE 6.00" @ 15#	300	G40.2150W
210	1	22510147	WIDE FLANGE 6.00" @ 15#	185	G40.2150W
211	2	22510147	WIDE FLANGE 6.00" @ 15#	290	G40.2150W
212	1	22510147	WIDE FLANGE 6.00" @ 15#	360	G40.2150W
213	1	22510107	WIDE FLANGE 4.00" @ 13#	250	G40.2150W
214	1	22510107	WIDE FLANGE 4.00" @ 13#	330	G40.2150W
215	1	22510107	WIDE FLANGE 4.00" @ 13#	240	G40.2150W
216	2		CHANNEL 8.00" @ 11.5#	220	G40.21.44W
217	2		CHANNEL 8.00" @ 11.5#	180	G40.21.44W
218	1		CHANNEL 6.00" @ 8.2#	385	G40.21.44W
219	3	783904008	HSS 4" X 4" X 0.2500" THK	709	G40.21.50W
220	6	783904008	HSS 4" X 4" X 0.2500" THK	123	G40.21.50W
221	1	22510107	WIDE FLANGE 4.00" @ 13#	560	G40.21.50W
222	6	22510107	WIDE FLANGE 4.00" @ 13#	160	G40.21.50W
223	2	22510107	WIDE FLANGE 4.00" @ 13#	195	G40.21.50W
224	1	783904008	HSS 4" X 4" X 0.2500" THK	472	G40.21.50W
225	1	22510107	CHANNEL 4.00" @ 5.4#	180	G40.21.50W
226	1	-	PLATE 0.25"	102 x 102	SA36

1. ALL FILLET WELDS TO BE 1/4" UNLESS OTHERWISE NOTED.
2. ALL MEMBERS ARE TO BE FLUSH WITH THE TOP OF SKID., UNLESS OTHERWISE NOTED.
3. SEE PAINTING SCHEDULE 8267-90.
4. SEE INSULATION SCHEDULE 8267-92.
5. INSULATE UNDERSIDE OF SKID WITH 3" FIRE RETARDANT SPRAY ON FOAM INSULATION.

SKID WEIGHT	
WEIGHT OF STEEL (LBS/Kg)	4850 LBS / 2205 Kg
WEIGHT OF BUILDING (LBS/Kg) @ 3.5 LBS/Sq.FT	N/A
TOTAL WEIGHT (LBS/Kg)	4850 LBS / 2205 Kg

REV	DATE	REV BY	CHK'D BY	APV'D BY	DESCRIPTION
1	12/16/04	CES	-	-	REVISED PIPE SUPPORTS 5,6, & 7, & ADDED PS-17
0	12/07/04	CES	SI	RM	ISSUED FOR CONSTRUCTION

REVISIONS

This drawing is the property of NATCO CANADA and is lent to the recipient for his confidential use only in consideration of the loan of this drawing. The recipient promises and agrees that it shall not be used in any way detrimental to the interests of NATCO CANADA, that it shall be returned upon request, and that it shall not be reproduced copied, lent or otherwise disposed of, directly or indirectly, without the written approval of NATCO CANADA.

NATCO CANADA
CALGARY ALBERTA CANADA

TITLE: PIPE SUPPORT DETAILS
MOLE SIEVE

CUSTOMER: CONOCOPHILLIPS

LOCATION: FIELD: SHERMAN
LSD: 6-3-62-12 W6M

PROJ. MANAGER: CURTIS S
DESIGN: 149
DATE: 11/18/04
PROJ. ENGINEER: ROD M
DRAWN BY: CURTIS S
SCALE: 1:20

CUST. REF. NO.: -
CONTRACT NO.: 8267
UNITS REQ.: 1
DRAWING NUMBER: D-8267A-04
SHT. 2 OF 4
PROD. CODE: -
REV: 1

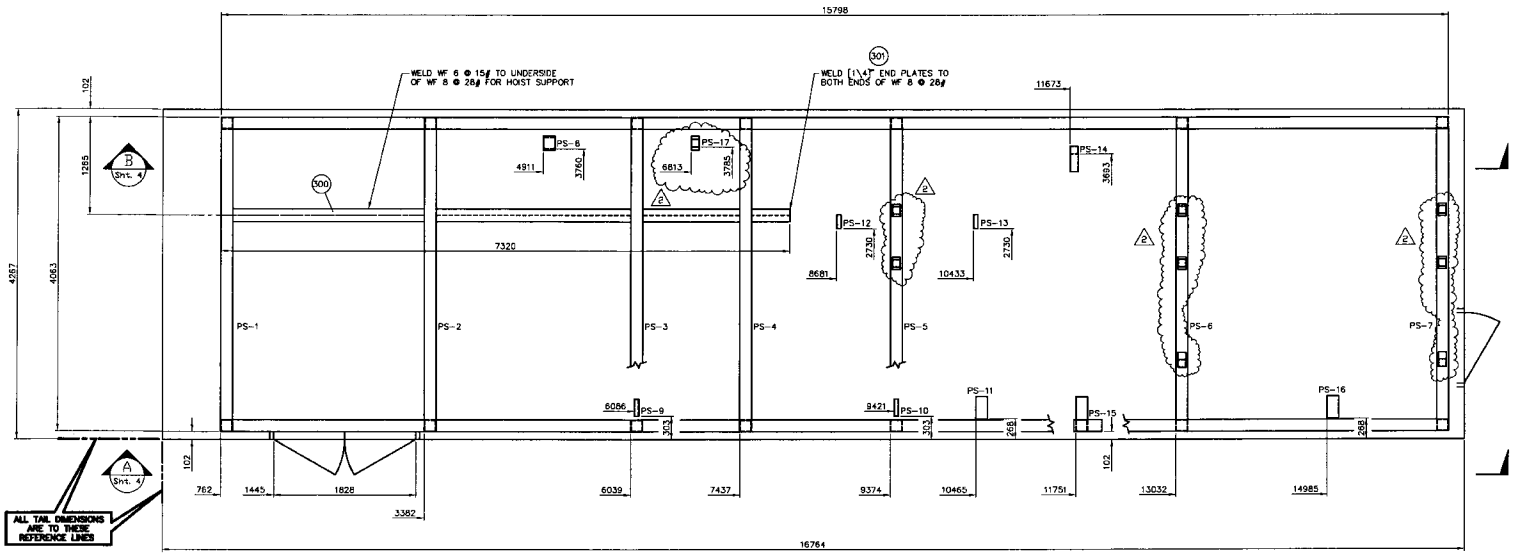

PLAN VIEW

MATERIAL LIST

ITEM	QTY	PART/COMP. No.	DESCRIPTION		MATERIAL
300	1	22510147	WIDE FLANGE 6.00" @ 15#	7320	G402150W
301	2		PLATE 0.250" THK	152 x 152	SA36

1. ALL FILLET WELDS TO BE 1/4" UNLESS OTHERWISE NOTED.
2. ALL MEMBERS ARE TO BE FLUSH WITH THE TOP OF SKID., UNLESS OTHERWISE NOTED.
3. SEE PAINTING SCHEDULE 8267-90.
4. SEE INSULATION SCHEDULE 8267-92.
5. INSULATE UNDERSIDE OF SKID WITH 3" FIRE RETARDANT SPRAY ON FOAM INSULATION.

SKID WEIGHT	
WEIGHT OF STEEL (LBS/Kg)	370 LBS / 168 Kg
WEIGHT OF BUILDING (LBS/Kg) @ 3.5 LBS/Sq.FT	N/A
TOTAL WEIGHT (LBS/Kg)	370 LBS / 168 Kg

REV	DATE	REV BY	CHK'D BY	APP'D BY	DESCRIPTION
2	12/17/04	CES	-	-	ADDED PS-17
1	12/10/04	CES	CES	RM	REVISED ORIENTATION OF PS-15
0	12/07/04	CES	S.	RM	ISSUED FOR CONSTRUCTION

REVISIONS

This drawing is the property of NATCO CANADA and is lent to the recipient for his confidential use only. In consideration of the loan of this drawing, the recipient promises and agrees that it shall not be used in any way detrimental to the interests of NATCO CANADA, that it shall be returned upon request, and that it shall not be reproduced copied, lent or otherwise disposed of, directly or indirectly, without the written approval of NATCO CANADA.

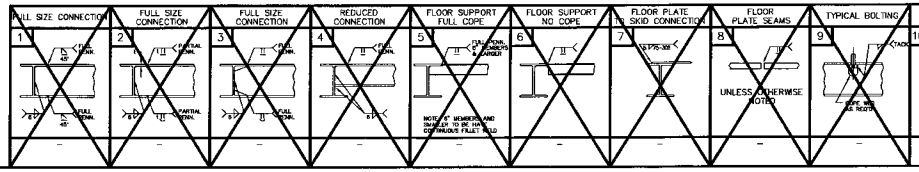

NATCO CANADA

CALGARY ALBERTA CANADA

TITLE: PIPE SUPPORT LOCATIONS MOLE SIEVE

CUSTOMER: CONOCOPHILLIPS

LOCATION: FIELD: SHERMAN LSD: 6-3-62-12 W6M

PROJ. ENGR. CURTIS S. | CHECK 149 | DATE 11/18/04

PROJ. MANAGER ROD M | DRAWN BY CURTIS S | SCALE 1:30

CUST. REF. NO. - | CONTRACT NO. 8267 | UNITS REQ. 1 | DRAWING NUMBER D-8267A-04 SHT. 3 OF 4 | PROD. CODE - | REV 2

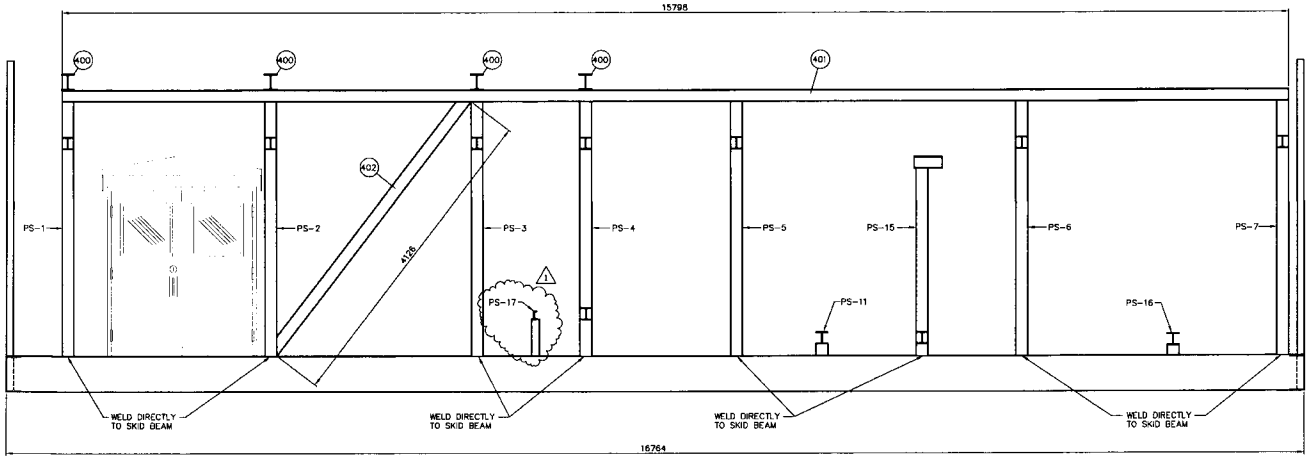

A SHT. 3 SECTION

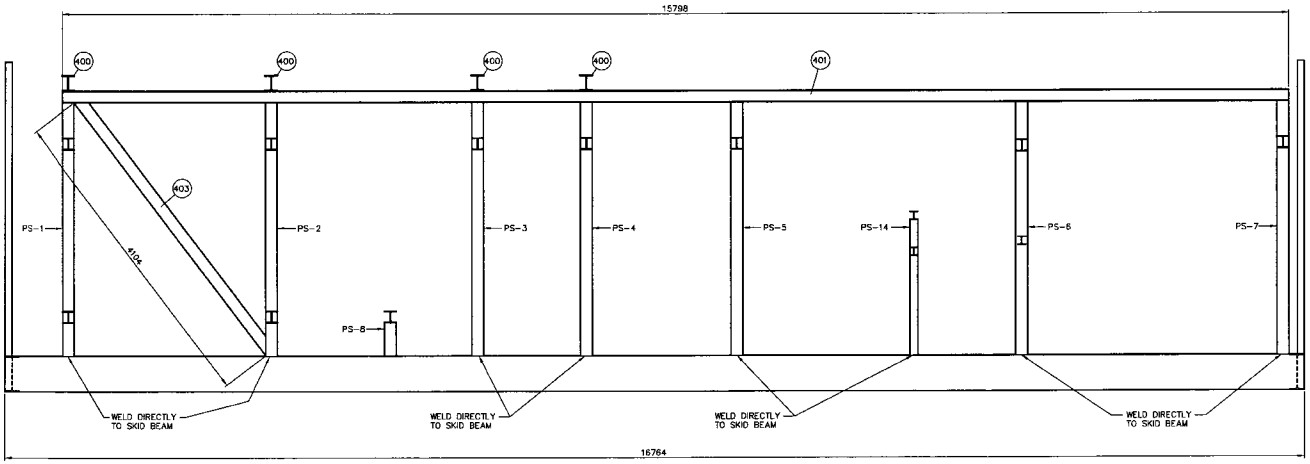

B SHT. 3 SECTION

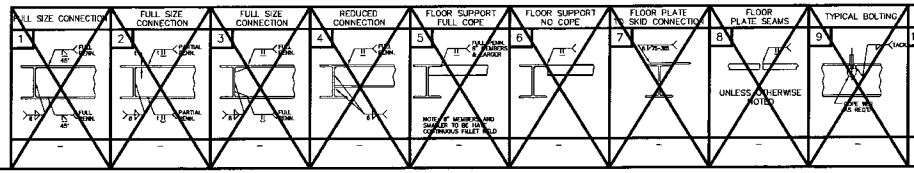

MATERIAL LIST

ITEM	QTY	PART/COMP. No.	DESCRIPTION		MATERIAL
400	4		WIDE FLANGE 8.00" @ 28#	4063	G402150W
401	2	22510147	WIDE FLANGE 6.00" @ 13#	16000	G402150W
			SHOP CUT TO SUIT		
402	1	11426400	HSS 6" X 6" X 1/4" THK	4126	SA350/44W
403	1	11426400	HSS 6" X 6" X 1/4" THK	4104	SA350/44W

1. ALL FILLET WELDS TO BE 1/4" UNLESS OTHERWISE NOTED.
2. ALL MEMBERS ARE TO BE FLUSH WITH THE TOP OF SKID., UNLESS OTHERWISE NOTED.
3. SEE PAINTING SCHEDULE 8267-90.
4. SEE INSULATION SCHEDULE 8267-92.
5. INSULATE UNDERSIDE OF SKID WITH 3" FIRE RETARDANT SPRAY ON FOAM INSULATION.

SKID WEIGHT	
WEIGHT OF STEEL (LBS/Kg)	3615 LBS / 1643 Kg
WEIGHT OF BUILDING (LBS/Kg) @ 3.5 LBS/Sq.FT	N/A
TOTAL WEIGHT (LBS/Kg)	3615 LBS / 1643 Kg

REV	DATE	REV BY	CHK'D BY	APPV'D BY	DESCRIPTION
1	12/17/04	CES	-	-	ADDED PS-17
0	12/07/04	CES	CES	RM	ISSUED FOR CONSTRUCTION

REVISIONS

This drawing is the property of NATCO CANADA and is lent to the recipient for his confidential use only. In consideration of the loan of this drawing, the recipient promises and agrees that it shall not be used in any way detrimental to the interests of NATCO CANADA, that it shall be returned upon request, and that it shall not be reproduced copied, lent or otherwise disposed of, directly or indirectly, without the written approval of NATCO CANADA.

NATCO CANADA

CALGARY ALBERTA CANADA

TITLE: PIPE SUPPORT SECTION VIEWS
MOLE SIEVE

CUSTOMER: CONOCOPHILLIPS

LOCATION: FIELD: SHERMAN
LSD: 6-3-62-12 W6M

PROJECT ENGR: CURTIS S | DRAWN: 149 | DATE: 11/18/04
PROJECT DESIGN: ROO M | DRAWN BY: CURTIS S | SCALE: 1:30

CUST. REF. NO.: -
CONTRACT NO.: 8267
LIMITS REQ.: 1
DRAWING NUMBER: D-8267A-04 SHT. 4 OF 4
PROJ. CODE:
REV: 1

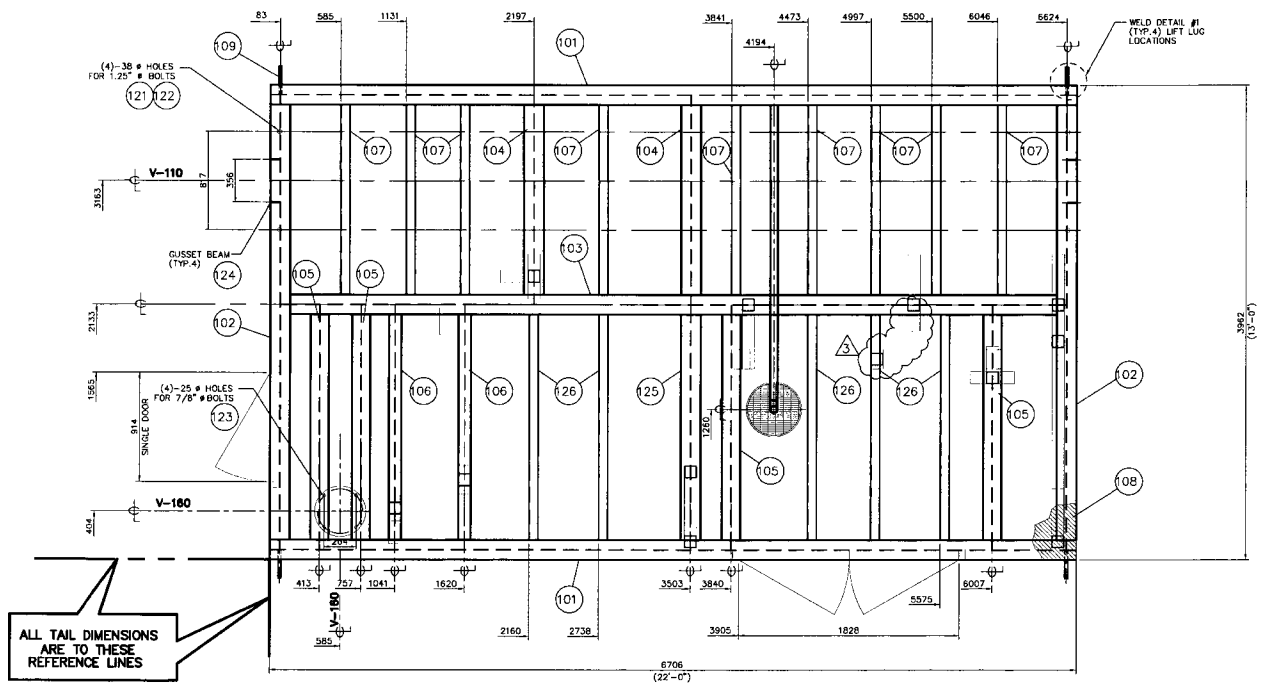

PLAN VIEW

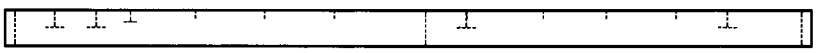

ELEVATION

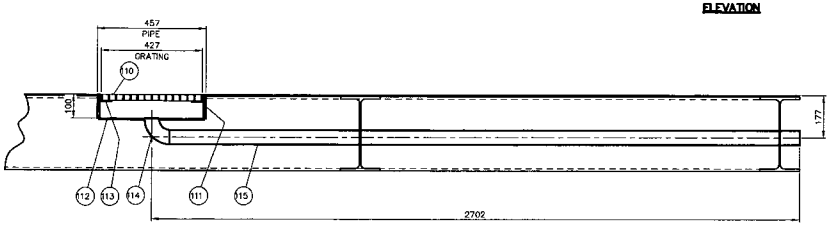

FLOOR DRAIN DETAIL
SCALE 1:10
(1 REQ'D)

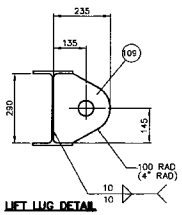

LIFT LUG DETAIL
SCALE 1:10
(4 REQ'D)

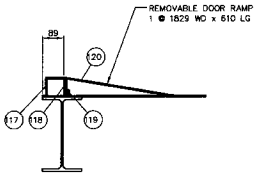

DOOR RAMP DETAIL
SCALE 1:10
(1 DOUBLE DOOR REQ'D)

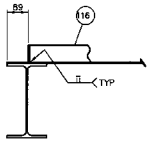

DRIP LIP DETAIL
SCALE 1:10

MATERIAL LIST

ITEM	QTY	PART/COMP. No.	DESCRIPTION	MATERIAL
101	2	22511517	WIDE FLANGE 12" @ 26# 6717	G402150W
102	2	22511517	WIDE FLANGE 12" @ 26# 3791	G402150W
103	1	22511517	WIDE FLANGE 12" @ 26# 6546	G402150W
104	2	22511517	WIDE FLANGE 12" @ 26# 1740	G402150W
105	4	22510147	WIDE FLANGE 6.00" @ 15# 2045	G402150W
106	8	22510107	WIDE FLANGE 4" @ 13# 2045	G402150W
107	9	22011967	ANGLE 3" x 3" x .25" 1581	SA36/44W
108	1	20025100	PLATE CHECKERED 0.250" THK 6706 x 3962	SA36/44W
109	4	16002300	PLATE 1.000" THK 235 x 290	SA44W
110	1	29555374	GRATING TYPE 19-4 1.00" X 3/16" DIA 427	C. STEEL
111	1	13422860	PIPE 16" STD .375 SMLS 100	SA106B
112	1	16002501	PLATE 0.250" THK 445 OD x 60.3 ID	SA36/44W
113	1	16002501	PLATE 0.250" THK NORM 437 X437 RING CUT TO 437 OD X 387 ID	SA36/44W
114	1	30002509	ELL WELD 2" XH LR 90	SA234WPB
115	1	13021039	PIPE 2.000" XH SMLS 2625	SA106B
116	1	10514620	BAR FLAT 3.000" X 0.250" 20750	SA36/G402144W
117	1	22011967	ANGLE 3" x 3" x .25" 1829	SA36/44W
118	1	10514620	BAR FLAT 3.000" X 0.250" 1829	SA36/G402144W
119	1	788903209	BAR FLAT 1.000" X 0.250" 1829	SA36
120	1	16002501	PLATE 0.250" THK 610 x 1829	SA36/44W
121	4	---	1.25" HX HD BOLT x 3 1/2" LG	SA325
122	4	732704020	1.25" NUTS	SA325
123	4	779804030	0.875" HX HD BOLT x 3 "LG c/w NUT	SA325
124	4	4203852009	PLATE 0.375" THK 290 x 80	SA36
125	1	22511517	WIDE FLANGE 12" @ 26# 2045	G402150W
126	5	22011967	ANGLE 3" x 3" x .25" 1885	SA36/44W

1. ALL FILLET WELDS TO BE 1/4" UNLESS OTHERWISE NOTED.
2. ALL MEMBERS ARE TO BE FLUSH WITH THE TOP OF SKID., UNLESS OTHERWISE NOTED.
3. SEE PAINTING SCHEDULE 8267-90.
4. SEE INSULATION SCHEDULE 8267-92.
5. INSULATE UNDERSIDE OF SKID WITH 3" FIRE RETARDANT SPRAY ON FOAM INSULATION.

SKID WEIGHT	
WEIGHT OF STEEL (LBS/Kg)	9601 LBS / 4355 Kg
WEIGHT OF BUILDING (LBS/Kg) @ 3.5 LBS/Sq.FT	4240 LBS / 1923 Kg
TOTAL WEIGHT (LBS/Kg)	13841 LBS / 6278 Kg

REV	DATE	REV BY	CHK'D BY	APP'D BY	DESCRIPTION
3	02/14/05	EA	-	-	REVISED PIPE SUPPORTS
2	01/25/05	EA	CS	RM	ADDED PIPE SUPPORT
1	01/19/05	EA	CS	RM	REVISED ITEM #102
0	01/07/05	EA	CS	RM	ISSUED FOR CONSTRUCTION
A	11/16/04	EA	CS	RM	ISSUED FOR APPROVAL

REVISIONS

This drawing is the property of NATCO CANADA and is lent to the recipient for his confidential use only in consideration of the loan of this drawing. the recipient promises and agrees that it shall not be used in any way detrimental to the interests of NATCO CANADA, that it shall be returned upon request, and that it shall not be reproduced copied, lent or otherwise disposed of, directly or indirectly, without the written approval of NATCO CANADA.

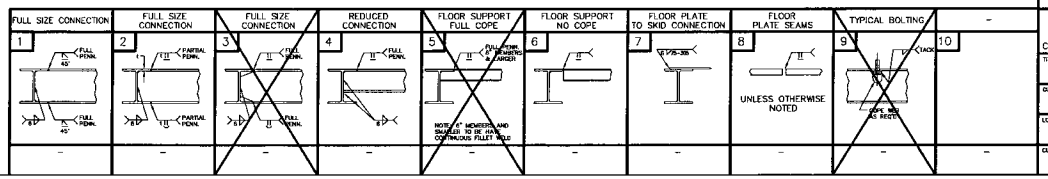

CALGARY ALBERTA CANADA

NATCO CANADA

TITLE: STRUCTURAL SKID FOR INLET SEPARATOR PACKAGE

CUSTOMER: CONOCOPHILLIPS

LOCATION: SHERMAN
LSD: 6-3-62-12-W6M

PROJECT ENGR: ELENA A. | DRAWN: 213 | DATE: 11/16/04
PROJECT MANAGER: ROD M. | DRAWN BY: ELENA A. | SCALE: 1:20

CUST. REF. NO.: -
CONTRACT NO.: 8267
UNITS REQ: 1
PROD. CODE: -
DRAWING NUMBER: D-8267B-04 SHT. 1 OF 2
REV: 3

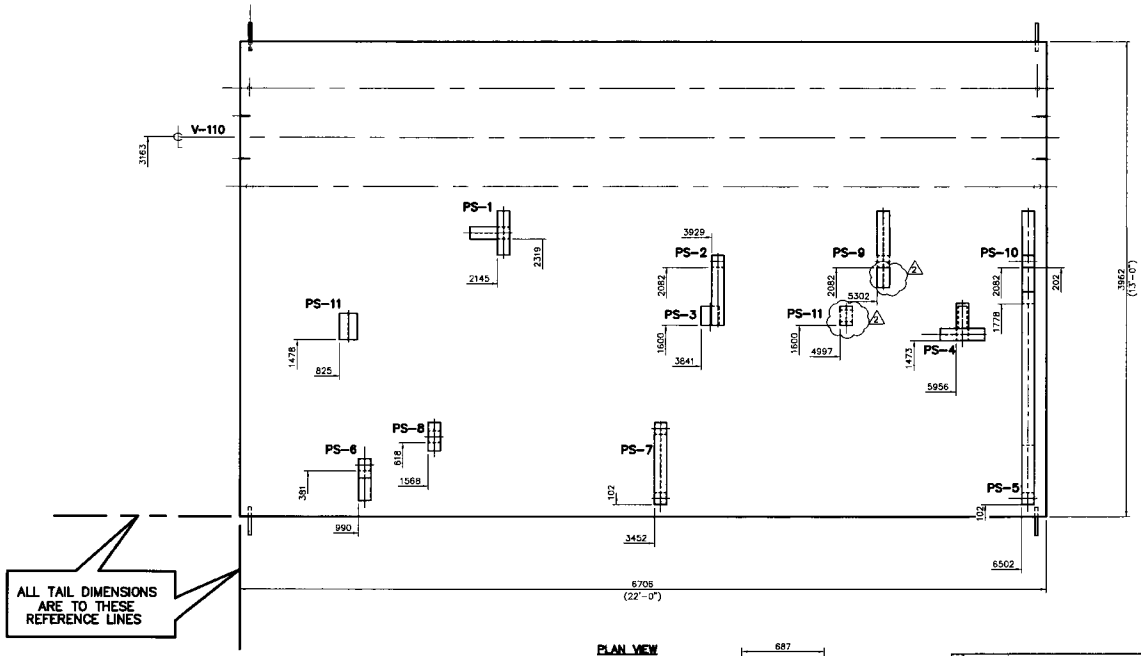

PLAN VIEW

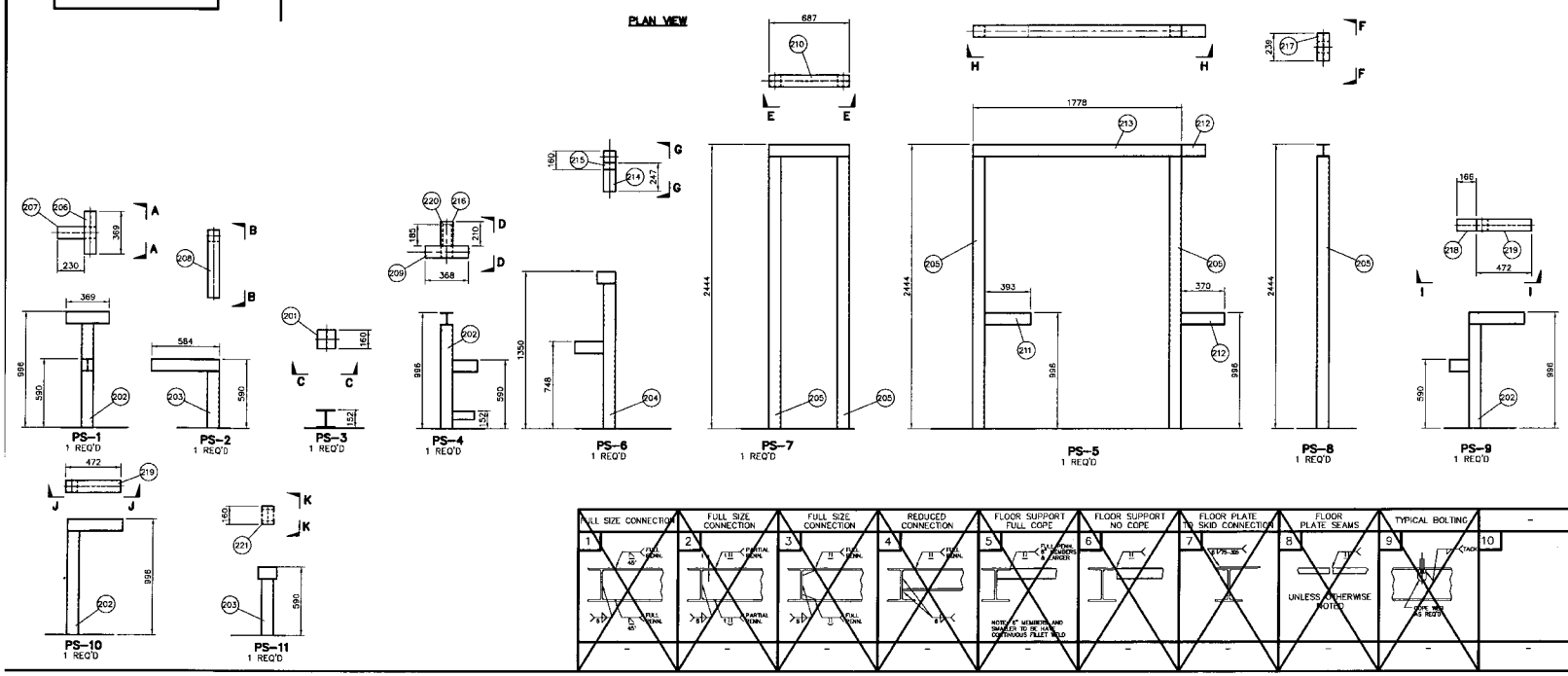

MATERIAL LIST

ITEM	QTY	PART/COMP. No.	DESCRIPTION		MATERIAL
201	1	22510147	WIDE FLANGE 6.00" @ 15#	160	G402150W
202	4	11739442	HSS 4" X 4" X 0.250"	890	G402144W
203	2	11739442	HSS 4" X 4" X 0.250"	484	G402144W
204	1	11739442	HSS 4" X 4" X 0.250"	1244	G402144W
205	5	11739442	HSS 4" X 4" X 0.250"	2338	G402144W
206	1	22510107	WIDE FLANGE 4" @ 13#	369	G402150W
207	1	22510107	WIDE FLANGE 4" @ 13#	230	G402150W
208	1	22510107	WIDE FLANGE 4" @ 13#	584	G402150W
209	1	22510107	WIDE FLANGE 4" @ 13#	368	G402150W
210	1	22510107	WIDE FLANGE 4" @ 13#	687	G402150W
211	1	22510107	WIDE FLANGE 4" @ 13#	393	G402150W
212	1	22510107	WIDE FLANGE 4" @ 13#	202	G402150W
213	1	22510107	WIDE FLANGE 4" @ 13#	1778	G402150W
214	1	22510107	WIDE FLANGE 4" @ 13#	247	G402150W
215	1	22510107	WIDE FLANGE 4" @ 13#	160	G402150W
216	1	22510107	WIDE FLANGE 4" @ 13#	210	G402150W
217	1	22510107	WIDE FLANGE 4" @ 13#	239	G402150W
218	1	22510107	WIDE FLANGE 4" @ 13#	166	G402150W
219	2	22510107	WIDE FLANGE 4" @ 13#	472	G402150W
220	1	22011967	ANGLE 3" x 3" x .25"	185	SA36/44W
221	1	22510107	WIDE FLANGE 4" @ 13#	160	G402150W

1. ALL FILLET WELDS TO BE 1/4" UNLESS OTHERWISE NOTED.
2. ALL MEMBERS ARE TO BE FLUSH WITH THE TOP OF SKID., UNLESS OTHERWISE NOTED.
3. SEE PAINTING SCHEDULE 8267-90.
4. SEE INSULATION SCHEDULE 8267-92.
5. INSULATE UNDERSIDE OF SKID WITH 3" FIRE RETARDANT SPRAY ON FOAM INSULATION.

SKID WEIGHT	
WEIGHT OF STEEL (LBS/Kg)	930 LBS /422 Kg
WEIGHT OF BUILDING (LBS/Kg) @ 3.5 LBS/Sq.FT	---- LBS / ---- Kg
TOTAL WEIGHT (LBS/Kg)	---- LBS / ---- Kg

REV	DATE	REV BY	CHK'D BY	APP'D BY	DESCRIPTION
2	02/14/05	EA	-	-	REVISED PS-9, ADDED PS-11
1	01/26/05	EA	CS	RM	REVISED PS-5, ADDED PS-10
0	01/07/05	EA	CS	RM	ISSUED FOR CONSTRUCTION
A	11/16/04	EA	CS	RM	ISSUED FOR APPROVAL

REVISIONS

This drawing is the property of NATCO CANADA and is lent to the recipient for his confidential use only. In consideration of the loan of this drawing, the recipient promises and agrees that it shall not be used in any way detrimental to the interests of NATCO CANADA, that it shall be returned upon request, and that it shall not be reproduced copied, lent or otherwise disposed of, directly or indirectly, without the written approval of NATCO CANADA.

NATCO CANADA

CALGARY ALBERTA CANADA

TITLE: PIPE SUPPORTS AND LOCATIONS
INLET SEPARATOR PACKAGE

CUSTOMER: CONOCOPHILLIPS

LOCATION: SHERMAN
LSD: 6-3-62-12-W6M

DRAWN BY: ELENA A. | DESIGN: 213 | DATE: 11/16/04
PROJ. MANAGER: ROD M. | DRAWING BY: ELENA A. | SCALE: 1:20

CUST. REF. NO.: - | CONTRACT NO.: 8267 | SHEETS REQ: 1 | DRAWING NUMBER: D-8267B-04 SHT. 2 OF 2 | REV: 2

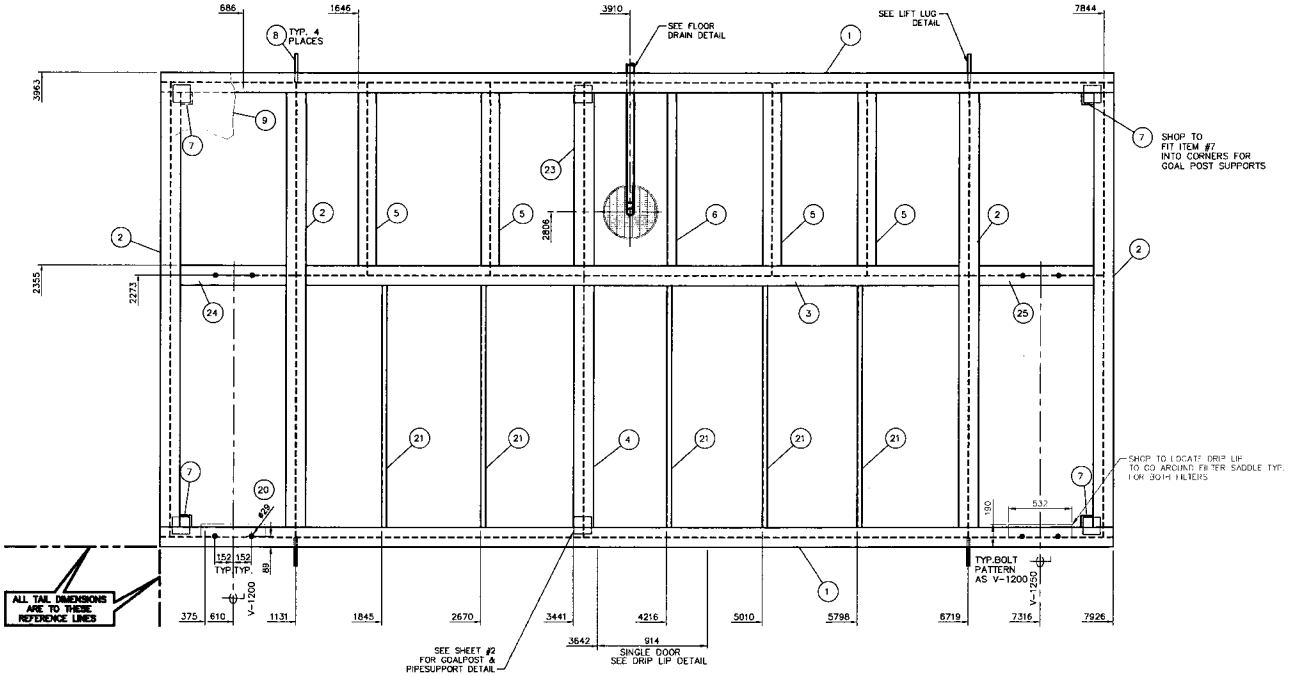

PLAN

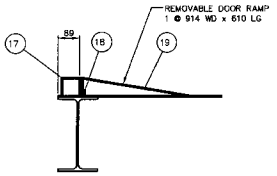

DOOR RAMP DETAIL

SCALE 1:10
(1 SINGLE DOOR REQ'D)

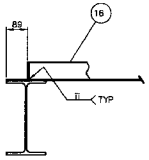

DRIP LIP DETAIL

SCALE 1:10

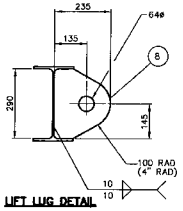

LIFT LUG DETAIL

SCALE 1:10
(4 REQ'D)

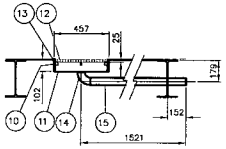

FLOOR DRAIN DETAIL

FULL SIZE CONNECTION	FULL SIZE CONNECTION	FULL SIZE CONNECTION	REDUCED CONNECTION	FLOOR SUPPORT FULL COPE	FLOOR SUPPORT NO COPE	FLOOR PLATE TO SKID CONNECTION	FLOOR PLATE SEAMS	TYPICAL BOLTING	–
1	2	3	4	5	6	7	8	9	10
WF12@26x12@26 MAIN CORNER CONN.	WF12@26x12@26	–	WF12@26x5@15	–	WF12@26x3X3X.25 L	–	–	–	–

MATERIAL LIST

ITEM	QTY	PART/COMP. No.	DESCRIPTION		MATERIAL
1	2	22511517	WIDE FLANGE 12" @ 26#	7925	G402150W
2	4	22511517	WIDE FLANGE 12" @ 26#	3792	G402150W
3	1	22511517	WIDE FLANGE 12" @ 26#	5982	G402150W
4	1	22511517	WIDE FLANGE 12" @ 26#	2184	G402150W
5	4	22510147	WIDE FLANGE 6.00" @ 15#	1602	G402150W
6	1	22011967	ANGLE 3.00" X 3.00" X 0.250"	1443	SA36/44W
7	4	16103751	PLATE 0.3750" THICK NORM	100x100	SA51670N
8	4		PLATE 1.25" THICK NORM	290x235	SA51670N
9	1	20025100	PLATE CHECKERED 1/4"	7926x3963	MILD STEEL
			SHOP CUT TO SUIT		
10	1	13422860	PIPE 18" STD .375 SMLS	102	SA106B
11	1	16002502	PLATE 0.2500" THICK NORM.	437x437	SA51670N
			RING CUT TO 437 OD X 61 ID		
12	1	29955374	GRATING TYPE 19-4 1.00" X 3/16"	435x435	C. STEEL
			CUT TO 435 OD		
13	4	16002502	PLATE 0.2500" THICK NORM.	25x25	SA51670N
14	1	30002509	ELL WELD 2" XH LR 90		SA234WPB
15	1	13021039	PIPE 2.000" XH SMLS	1154	SA106B
			BEVEL ONE END 2" NPT OTHER END		
16	1	10514620	BAR FLAT 3.000" X 0.250"	23800	SA36/G402144W
			SHOP CUT TO SUIT		
17	1	22011967	ANGLE 3.00" X 3.00" X 0.250"	914	SA36/44W
18	1	10512420	BAR FLAT 1.000" X 0.250"	914	SA36/G402144W
19	1	20025100	PLATE CHECKERED 1/4"	914x610	MILD STEEL
			SHOP BEND TO SUIT		
20	8	65209314	BOLT HEX 0.875" X 3.5" LG C/W NUT/WASHER		SA325
21	5	22111427	CHANNEL 4" @ 5.4#	2025	SA36/44W
23	1	22511517	WIDE FLANGE 12" @ 26#	1602	G402150W
24	1	22511517	WIDE FLANGE 12" @ 26#	1043	G402150W
25	1	22511517	WIDE FLANGE 12" @ 26#	1119	G402150W

1. ALL FILLET WELDS TO BE 1/4" UNLESS OTHERWISE NOTED.
2. ALL MEMBERS ARE TO BE FLUSH WITH THE TOP OF SKID., UNLESS OTHERWISE NOTED.
3. SEE PAINTING SCHEDULE 8267-90.
4. SEE INSULATION SCHEDULE 8267-92.
5. INSULATE UNDERSIDE OF SKID WITH 3" FIRE RETARDANT SPRAY ON FOAM INSULATION.

SKID WEIGHT (INCLUDES WEIGHT FROM SHT#2)	
WEIGHT OF STEEL (LBS/Kg)	10430 LBS / 4731 Kg
WEIGHT OF BUILDING (LBS/Kg) @ 3.5 LBS/Sq.FT	5005 LBS / 2270 Kg
TOTAL WEIGHT (LBS/Kg)	15604 LBS / 7078 Kg

REV	DATE	REV BY	CHK'D BY	APP'D BY	DESCRIPTION
1	01/20/05	CES	-	-	TOOK HOLD OFF LIFT LUG & CHANGED LUG THICKNESS TO 1.25"
0	01/07/05	EA	CES	RM	ISSUED FOR CONSTRUCTION
A	12/20/04	FW	CES	RM	ISSUED FOR APPROVAL

REVISIONS

This drawing is the property of NATCO CANADA and is lent to the recipient for his confidential use only. In consideration of the loan of this drawing, the recipient promises and agrees that it shall not be used in any way detrimental to the interests of NATCO CANADA, that it shall be returned upon request, and that it shall not be reproduced copied, lent or otherwise disposed of, directly or indirectly, without the written approval of NATCO CANADA.

NATCO CANADA

CALGARY ALBERTA CANADA

TITLE: STRUCTURAL SKID FOR INLET FILTER COALESCER PACKAGE

CUSTOMER: CONOCO PHILLIPS

LOCATION: SHERMAN
LSD: 6-3-82-12 W6M

DRAWN: FRANK W. | DESIGN: 71 | DATE: 12/17/04
CHECKED: ROD M. | REV. FRANK W. | SCALE: 1:20

DIST. REF. NO.: - | CONTRACT NO.: 8267 | UNITS REQ: 1 | DRAWING NUMBER: D-8267-04-C SHT. 1 OF 2 | REV: 1

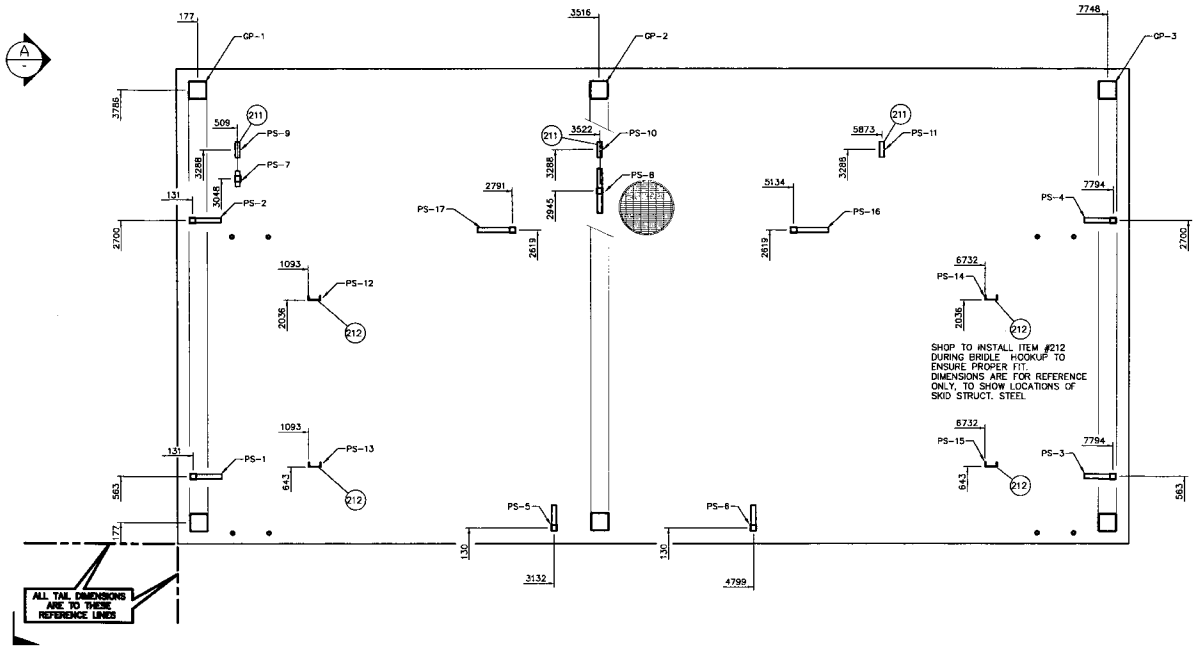

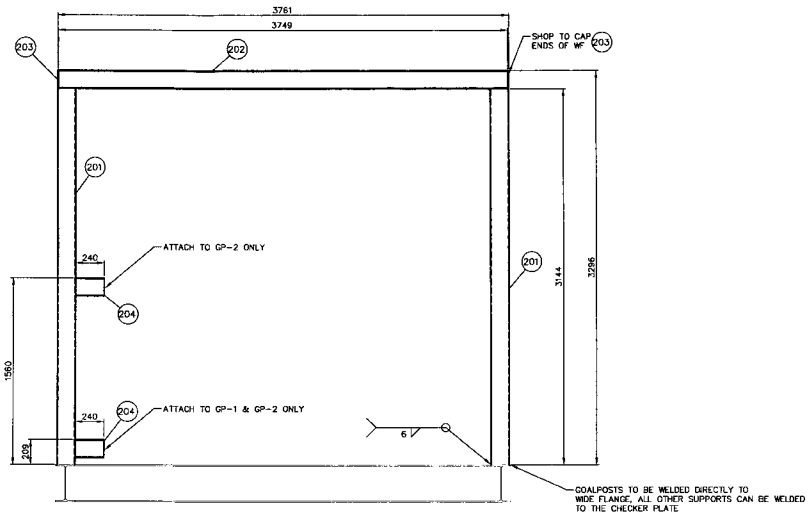

GOALPOST GP-1,GP-2,GP-3 DETAIL
FROM VIEW "A"

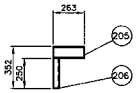

PS-1,2,3,&4 DETAIL

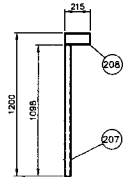

PS-5&6 DETAIL
NOTE DIRECTION OF WEB
(1) RH (1) LH

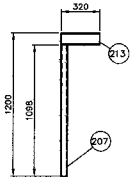

PS-16&17 DETAIL
(1) RH (1) LH

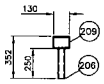

PS-7 DETAIL

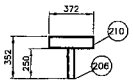

PS-8 DETAIL

MATERIAL LIST

ITEM	QTY	PART/COMP. No.	DESCRIPTION		MATERIAL
201	6	11426400	HSS 6" X 6" X 0.250" THK	3144	G4021. 350WC
202	3	22510147	WIDE FLANGE 6.00" @ 15#	3749	G402150W
203	6	16002501	PLATE 0.250"THK	152x152	SA36/40.21-44W
204	3	22510147	WIDE FLANGE 6.00" @ 15#	240	G402150W
205	4	22111427	CHANNEL 4.00" @ 5.4#	263	G402144W
206	6	11739132	HSS 2" X 2" X 0.250" THK	250	G4021. 350WC
207	4	11739132	HSS 2" X 2" X 0.250" THK	1098	G4021. 350WC
208	2	22111427	CHANNEL 4.00" @ 5.4#	215	G402144W
209	1	22111427	CHANNEL 4.00" @ 5.4#	130	G402144W
210	1	22111427	CHANNEL 4.00" @ 5.4#	372	G402144W
211	3	22111427	CHANNEL 4.00" @ 5.4#	130	G402144W
212	4	22111427	CHANNEL 4.00" @ 5.4#	1625	G402144W
213	2	22111427	CHANNEL 4.00" @ 5.4#	320	G402144W

1. ALL FILLET WELDS TO BE 1/4" UNLESS OTHERWISE NOTED.

REV	DATE	REV BY	CHK'D BY	APP'D BY	DESCRIPTION
0	01/07/05	EA	-	-	ISSUED FOR CONSTRUCTION
A	12/20/04	FW	CS	RM	ISSUED FOR APPROVAL

REVISIONS

This drawing is the property of NATCO CANADA and is lent to the recipient for his confidential use only. In consideration of the loan of this drawing, the recipient promises and agrees that it shall not be used in any way detrimental to the interests of NATCO CANADA, that it shall be returned upon request, and that it shall not be reproduced copied, lent or otherwise disposed of, directly or indirectly, without the written approval of NATCO CANADA.

NATCO CANADA
CALGARY ALBERTA CANADA

TITLE: PIPE SUPPORTS FOR INLET FILTER COALESCER PACKAGE

CUSTOMER: CONOCO PHILLIPS

LOCATION: SHERMAN
LSD: 6-3-62-12 W6M

DRAWN: FRANK W — ORDER: 171 — DATE: 12/20/04
CHKD: ROD M — SCALE: 1:20

CUST. REF. NO.: -
CONTRACT NO.: 8267
UNITS REQ.: 1
DRAWING NUMBER: D-8267-04-C
PROD. CODE: -
SHT. 2 OF 2
REV: 0