THE INFORMATION CONTAINED HEREIN IS THE CONFIDENTIAL PROPERTY OF TOROMONT PROCESS SYSTEMS AND IS NOT FOR PUBLICATION, AND NO PART THEREOF SHALL BE COPIED OR COMMUNICATED TO A THIRD PARTY WITHOUT AUTHORIZATION FROM TOROMONT PROCESS SYSTEMS.

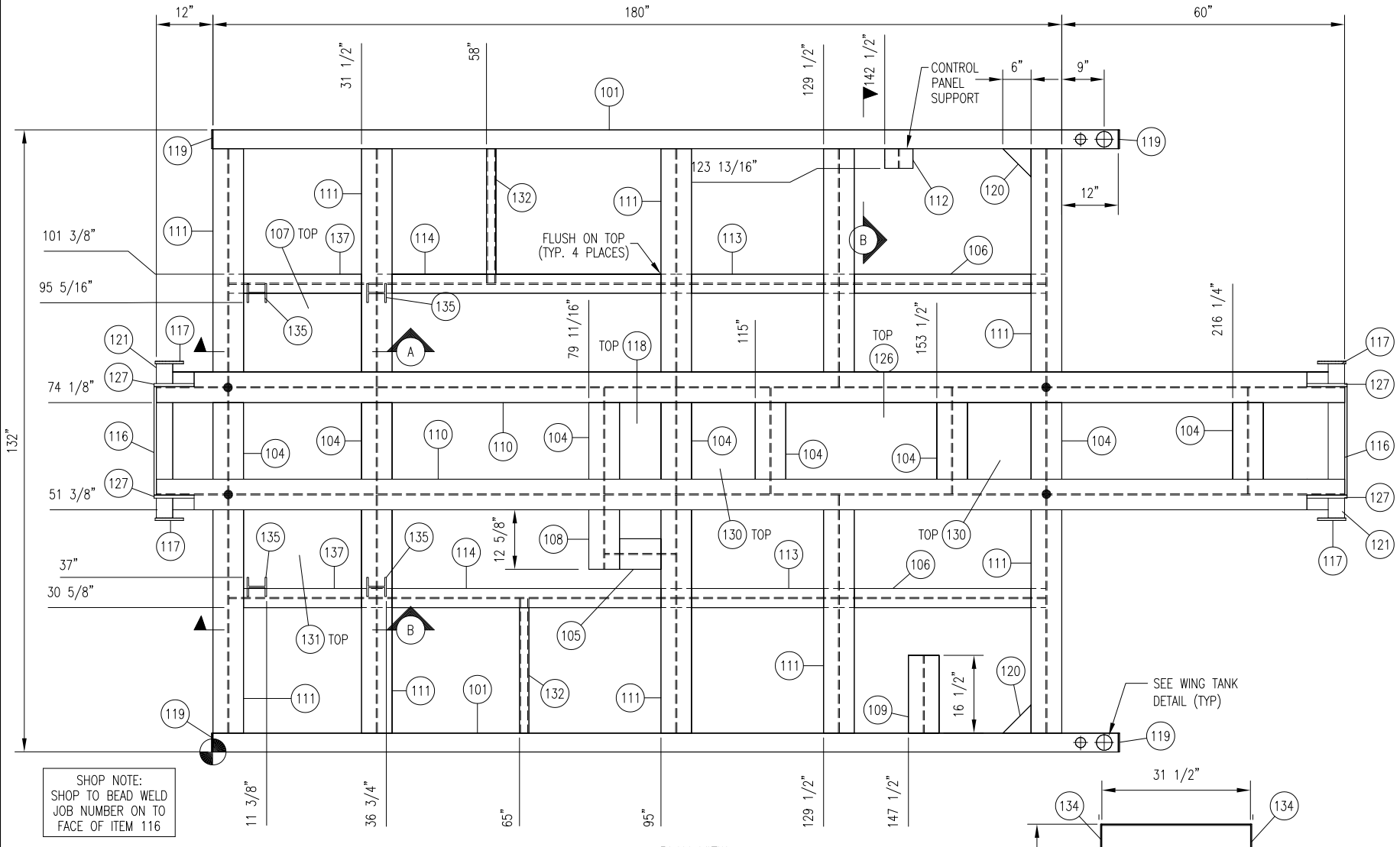

SHOP NOTE:
SHOP TO BEAD WELD JOB NUMBER ON TO FACE OF ITEM 116

PLAN VIEW
SCALE: 3/4" = 1'-0"

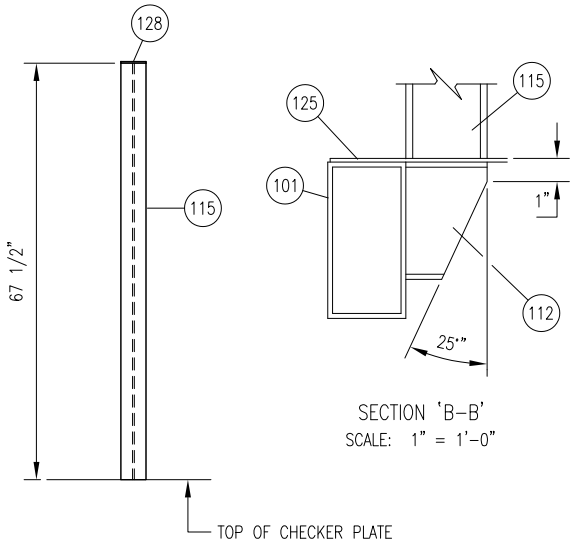

CONTROL PANEL SUPPORT
(SCALE: 3/4" : 1'-0")

SECTION 'B-B'
SCALE: 1" = 1'-0"

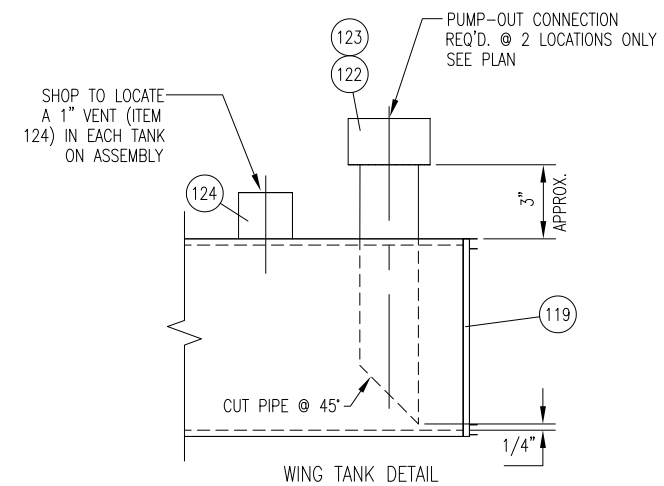

WING TANK DETAIL
SCALE: 3" = 1'-0"
REQUIRED (2) PLACES

BILL OF MATERIAL			
ITEM	QTY	DESCRIPTION	MATERIAL
101	2	H.S.S.: 8 X 4 X 0.250" THK X 192" LG	G40.21350W
102	2	FLATBAR: 2" X 1/4" THK X 167" LG (DRIP LIP)	G40.2144W
103	1	FLATBAR: 2" X 1/4" THK X 115 5/8" LG (DRIP LIP)	G40.2144W
104	8	W 8 X 24 X 22 1/2" LG	G40.2150W
105	1	W 8 X 24 X 15" LG	G40.2150W
106	2	W 4 X 13 X 43 3/4" LG	G40.2150W
107	1	PLATE: 3/8" THK 25" X 16 11/16" LG	G40.2144W
108	1	W 8 X 24 X 15 3/4" LG	G40.2150W
109	1	W 8 X 24 X 16 1/2" LG	G40.2150W
110	2	W 8 X 24 X 252" LG	G40.2150W
111	10	W 8 X 24 X 50 1/2" LG	G40.2150W
112	1	W 6 X 15 X 4 3/16" LG	G40.2150W
113	2	W 4 X 13 X 34 1/4" LG	G40.2150W
114	2	W 4 X 13 X 63 1/4" LG	G40.2150W
115	1	W 4 X 13 X 67 1/2" LG	G40.2150W
116	2	FLAT BAR: 1/2" THK 4" X 23" LG	G40.2144W
117	4	PLATE: 1/2" THK 6" DIA.	G40.2144W
118	1	PLATE: 3/8" THK 8 3/4" X 16 1/4" LG	G40.2144W
119	4	FLAT BAR: 1/4" THK 4" X 8" LG	G40.2144W
120	1	FLAT BAR: 1/2" THK 6" SQ. (CUT @ 45° 1 MAKES 2)	G40.2144W
121	2	PIPE: 3" NOM SCH 80 X 32 3/4" LG	SA-106-B
122	2	PIPE: 2" NOM SCH 40 X 15 1/2" LG (CTS)	SA-106-B
123	2	PIPE CAP: 2"-3000# NPT	SA-105
124	2	COUPLING: 1"-3000# NPT	SA-105
125	1	CHECKER PLATE: 3/16" THK 84" X 131" LG	SA-36
126	1	PLATE: 3/8" THK 16 1/4" X 27 3/4" LG	G40.2144W
127	2	PIPE: 1" NOM SCH 80 X 8 1/2" LG (CUT IN HALF)	SA-106-B
128	1	PLATE: 1/4" THK 4" SQ.	G40.2144W
129	1	FLATBAR: 2" X 1/4" THK X 124" LG. (DRIP LIP)	G40.2144W
130	2	PLATE: 3/8" THK 13 1/2" X 16 1/4" LG	G40.2144W
131	1	PLATE: 3/8" THK 25" X 16 11/16" LG	G40.2144W
132	2	H.S.S.: 2" X 2" X 0.250" THK X 28 1/2" LG	G40.21350W
133	1	CHECKER PLATE: 3/16" THK 95 1/4" X 131" LG	SA-36
134	4	PLATE: 1/4" THK 6" SQ.	G40.2144W
135	4	W 4 X 13 X 40 15/16" LG	G40.2150W
136	2	W 6 X 15 X 31 1/2" LG	G40.2150W
137	2	W 4 X 13 X 31 1/4" LG	G40.2150W
138	1	W 4 X 13 X 21 3/16" LG	G40.2150W

GENERAL NOTES:

1. ◐ ALL TAIL DIMENSIONS FROM REFERENCE POINT.
2. WEIGHT OF SKID STEEL BASE: 7000 LBS
   WEIGHT OF RAISED BASES: 300 LBS
   TOTAL WEIGHT: 7300 LBS
3. COPE FLANGES WHERE REQUIRED.
4. ALL WELDS TO BE 1/4" FILLETS ALL AROUND, UNLESS OTHERWISE NOTED.
5. ALL CUT LENGTHS ARE EXACT TOL +0.0"/-0.125" (+0 MM/-3 MM)
6. ALL BOLT HOLES ARE 3/4"ø (19 MMø) UNLESS OTHERWISE NOTED.
7. SURFACE PREP: SANDBLAST TO SSPC-SP6.
   PRIMER: ONE COAT OF PRI-1 RED OXIDE
   PAINT: ONE COAT OF FIN-1
8. ● FULL PENETRATION STRENGTH WELD IS REQ'D AT THESE LOCATIONS.
9. ALL PANEL JOINTS OF CHECKER PLATE ARE TO BE SEAL WELDED. PERIMETER OF SKID TO BE STITCH WELDED. SKID MEMBERS TO UNDERSIDE OF CHECKER PLATE TO BE STITCH WELDED AT 2"(50 MM) OF FILLET ON 16" (406) CENTERS

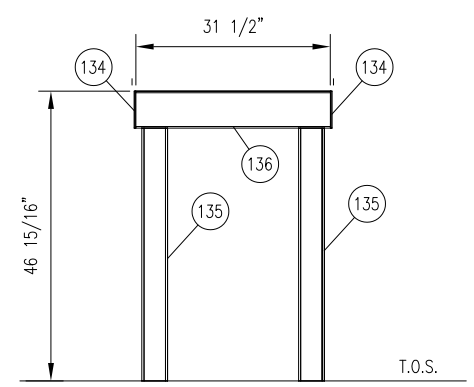

VIEW 'A-A'
SCALE: 3/4" = 1'-0"

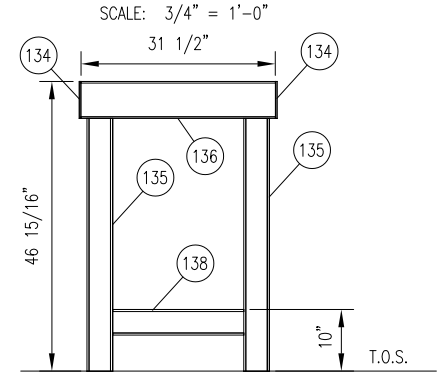

VIEW 'B-B'
SCALE: 3/4" = 1'-0"

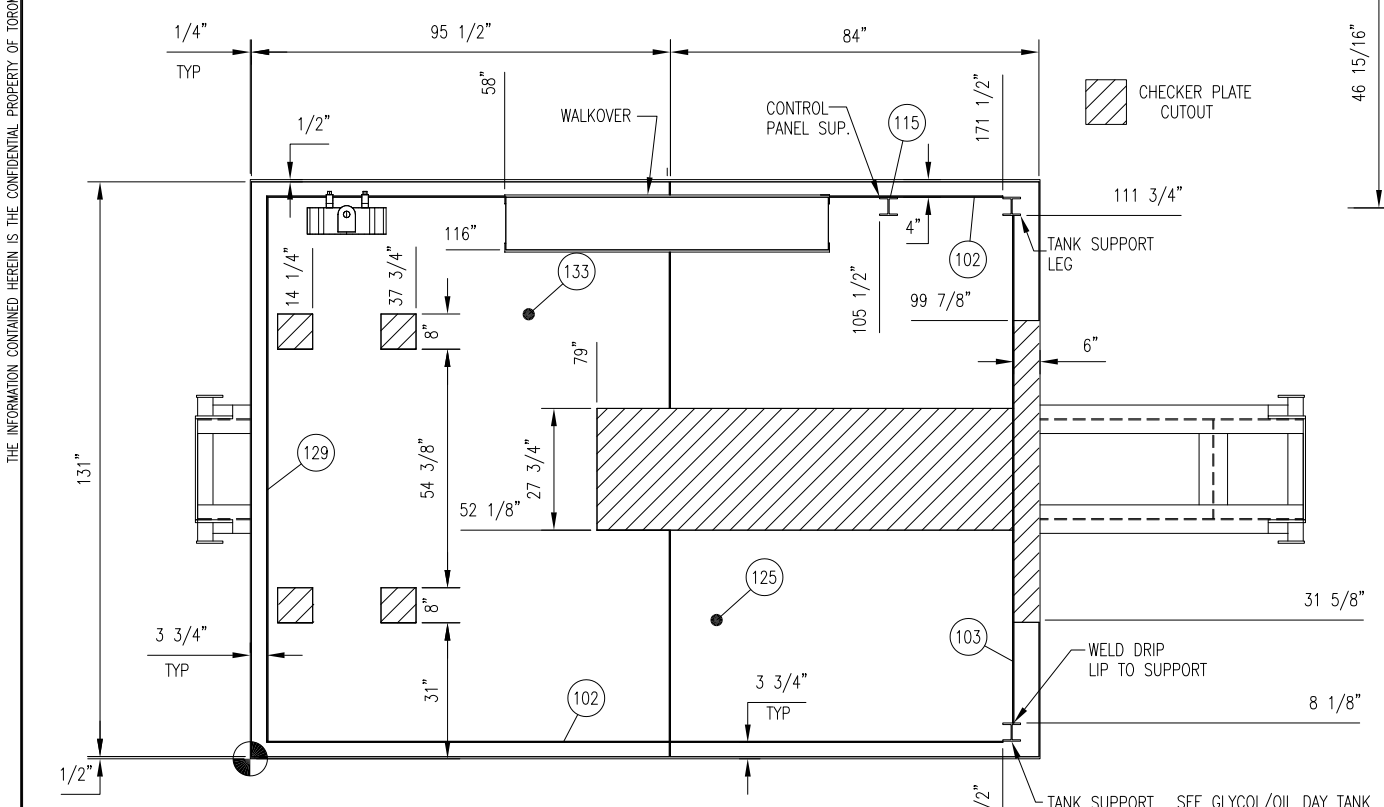

CHECKER PLATE DETAIL
SCALE: NOT TO SCALE

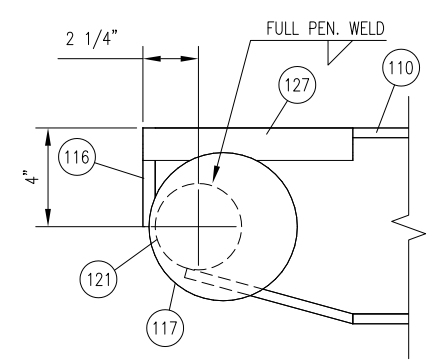

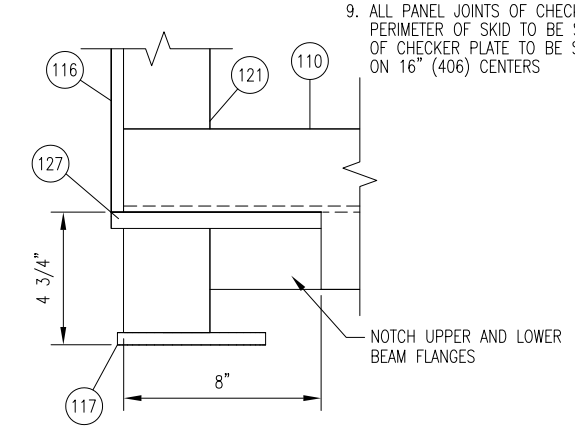

TYP. DRAG LUG
SCALE: 3" = 1'-0"
REQUIRED (4) PLACES

REV.	DESCRIPTION	DATE	BY	APPR.
2	AS BUILT	JAN 22/04	SS	
1	ISSUED FOR CONSTRUCTION	JUL 31/03	CD	GS

PERMIT TO PRACTICE STAMP

ENGINEER STAMP

TOROMONT / TOROMONT PROCESS SYSTEMS

DRAWN BY: C. DAVIDSON	DATE: JUL 21/03
CHKD. BY: G.SCHUSTER	SCALE: AS NOTED
APPR. BY:	W.O. No: 11265301
CUST. PO No:	

TITLE: STRUCTURAL STEEL DETAILS

FOR: TOROMONT PROCESS SYSTEMS
135 HP
BOOSTER UNIT
FRICK 151N COMPRESSOR

DWG. No: 11265-301 | SHEET No: 1 OF 2 | REV: 2