THE INFORMATION CONTAINED HEREIN IS THE CONFIDENTIAL PROPERTY OF TOROMONT PROCESS SYSTEMS AND IS NOT FOR PUBLICATION, AND NO PART THEREOF SHALL BE COPIED OR COMMUNICATED TO A THIRD PARTY WITHOUT AUTHORIZATION FROM TOROMONT PROCESS SYSTEMS.

C-1
GAS COMPRESSOR
FRICK: TDSH-233L
OPERATING SPEED: 1800 RPM
SUCTION PRESSURE: SEE CURVE
DISCHARGE PRESSURE: SEE CURVE
DISPLACEMENT: 645.7 ACFM @ 100%
OIL TEMPERATURE: 160 DEG.F
DESIGN OIL FLOW RATE: 50.5 GPM (MAX.)
POWER DRAW: 193 BHP
WEIGHT: 2950 LBS.

F-1
OIL FILTER
SIZE: 8.6" O.D. X 27.5" S/F
MAWP: 400 PSIG @ 250 DEG.F
MDMT: -20 DEG.F @ 400 PSIG
CA: 0.0625"
SHELL MATERIAL: SA-106B
HEAD MATERIAL: SA-516-70
ELEMENT: (1) MODEL 1833C
WEIGHT: 286 LBS.

P-1
OIL PUMP
MAKE: TUTHILL
MODEL: STIMA506T11V000
FLOW: 50 GPM
SPEED: 1500 RPM
POWER DRAW: 4 H.P.
WEIGHT: 35 KGS

V-2
OIL SEPARATOR
SIZE: 20" O.D. X 90" S/F
MAWP: 375 PSIG @ 250 DEG.F
MDMT: -20 DEG.F @ 375 PSIG
CA: 0.0625"
SHELL MATERIAL: SA-516-70
HEAD MATERIAL: SA-516-70
ELEMENT: (1) RSC18321
WEIGHT: 2225 LBS.

E-1
OIL COOLER
MODEL: VICARB V-20-SST-50
PLATES: 29
MAWP OIL SIDE: 375 PSIG @ 250 DEG.F
MAWP GLYCOL SIDE: 375 PSIG @ 250 DEG.F
DESIGN DUTY: 342014 BTU/HR
SURFACE AREA: 58.10 SQ.FT
WEIGHT: 755 LBS.

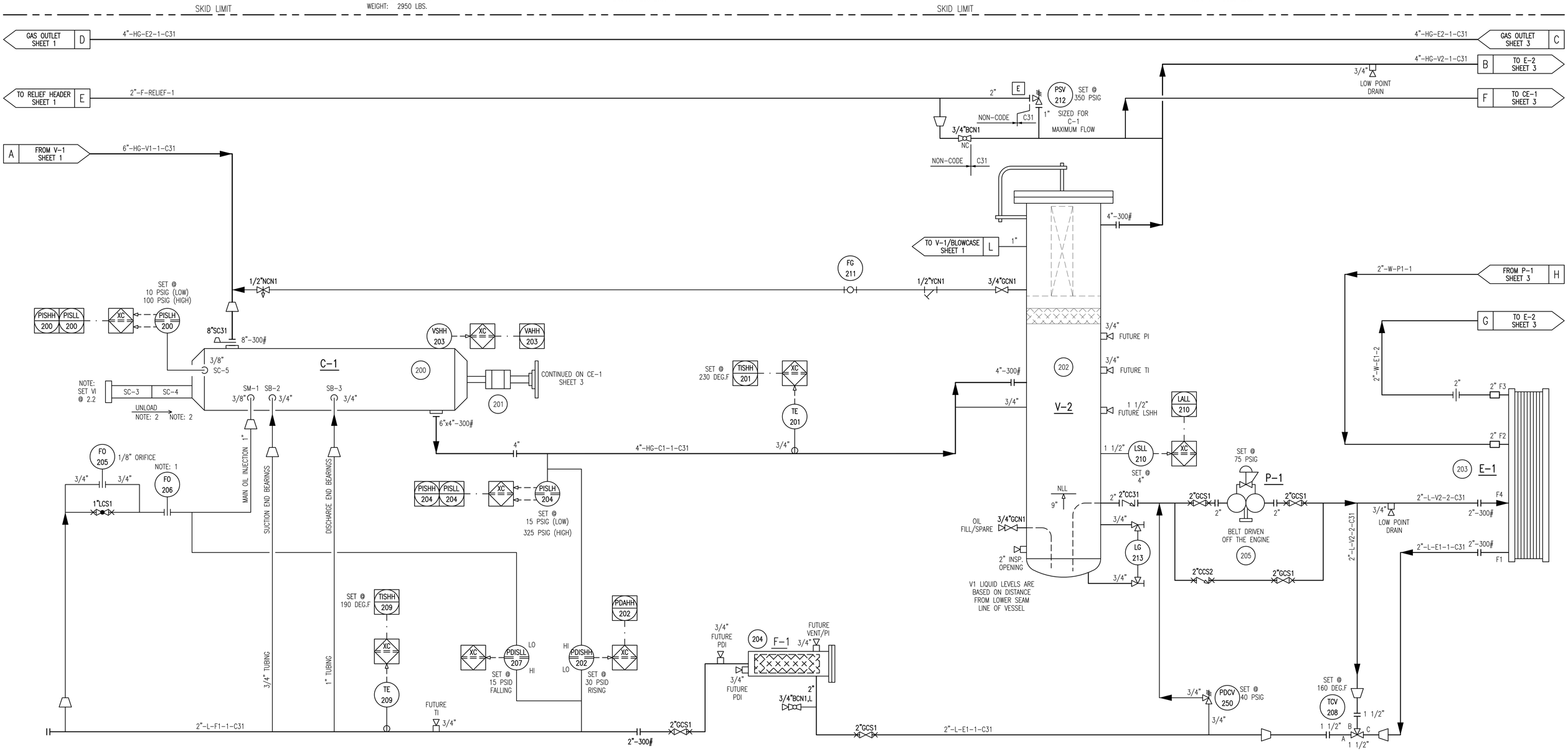

SKID LIMIT

NOTE: 1 ORIFICE SUPPLIED WITH COMPRESSOR.
NOTE: 2 TURN CLOCKWISE TO LOAD.

REV.	DESCRIPTION	DATE	BY	APPR.
2	AS BUILT	JUL 3/01	SS	
1	ISSUED FOR CONSTRUCTION	DEC 19/00	SB	GO

PERMIT TO PRACTICE STAMP

ENGINEER STAMP

TOROMONT / TOROMONT PROCESS SYSTEMS

TITLE: P & I FLOW DIAGRAM

FOR: CANADIAN HUNTER 200 HP BOOSTER COMPRESSOR

DRAWN BY: P. NOBLE	DATE: DEC. 19, 2000
CHKD. BY: G. O'GALLAGHER	SCALE: N/A
APPR. BY: G. O'GALLAGHER	W.O. No: 10682101
CUST. PO No:	

DWG. No: 10682-101 | SHEET No: 2 OF 4 | REV: 2