THE INFORMATION CONTAINED HEREIN IS THE CONFIDENTIAL PROPERTY OF TOROMONT PROCESS SYSTEMS AND IS NOT FOR PUBLICATION, AND NO PART THEREOF SHALL BE COPIED OR COMMUNICATED TO A THIRD PARTY WITHOUT AUTHORIZATION FROM TOROMONT PROCESS SYSTEMS.

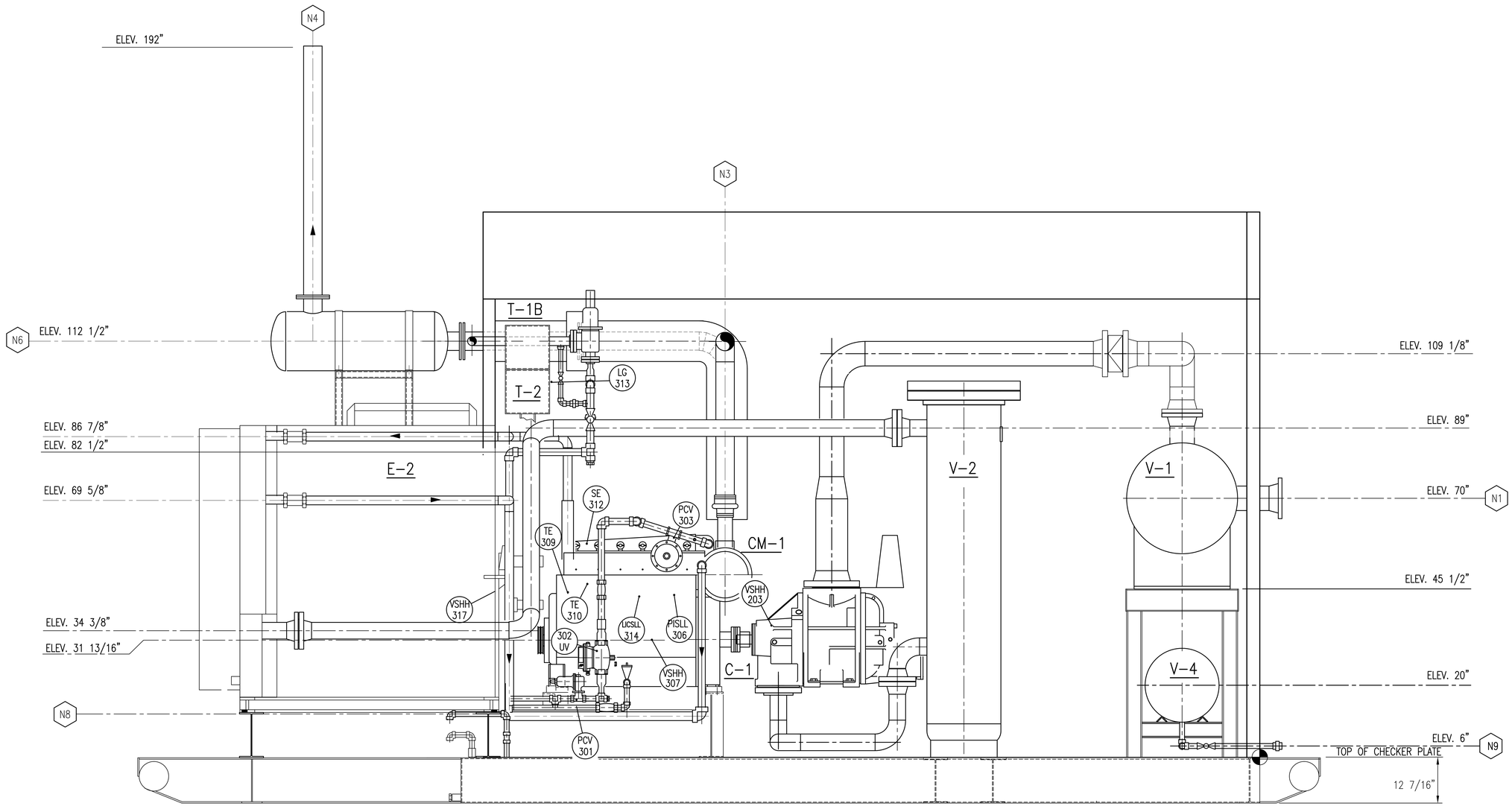

VIEW "B-B"

REV.	DESCRIPTION	DATE	BY	APPR.
2	AS BUILT	JUN 3/01	SS	
1	ISSUED FOR CONSTRUCTION	DEC 19/00	SB	GO

PERMIT TO PRACTICE STAMP

ENGINEER STAMP

TOROMONT PROCESS SYSTEMS

DRAWN BY: P. NOBLE	DATE: SEPT.29/00
CHKD. BY: G. O'GALLAGHER	SCALE: 3/4" = 1'-0"
APPR. BY: G. O'GALLACHER	W.O. No: 10682201
CUST. PO No:	

TITLE: ELEVATION

FOR: CANADIAN HUNTER 200 HP BOOSTER COMPRESSOR

DWG. No: 10682-201 | SHEET No: 3 OF 4 | REV: 2