THE INFORMATION CONTAINED HEREIN IS THE CONFIDENTIAL PROPERTY OF TOROMONT PROCESS SYSTEMS AND IS NOT FOR PUBLICATION, AND NO PART THEREOF SHALL BE COPIED OR COMMUNICATED TO A THIRD PARTY WITHOUT AUTHORIZATION FROM TOROMONT PROCESS SYSTEMS.

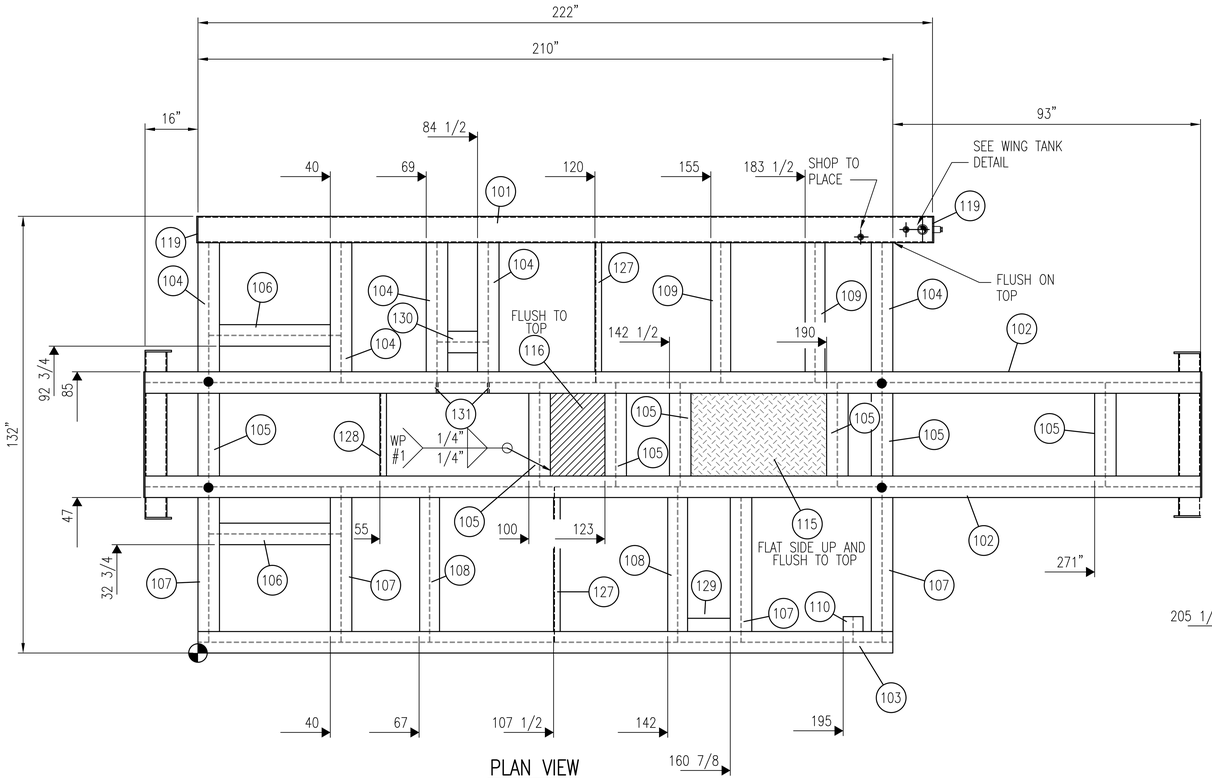

PLAN VIEW

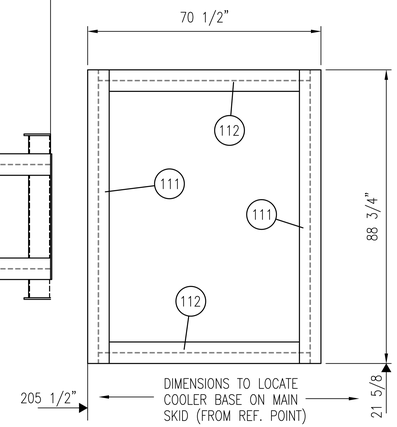

BILL OF MATERIAL			
ITEM	QTY	DESCRIPTION	MATERIAL
101	1	H.S.S.: 8" X 12" X 3/8" THK X 222" LG	SA-36
102	2	W12 X 26 X 319" LG	SA-36
103	1	W12 X 26 X 210" LG	SA-36
104	5	W12 X 26 X 42 1/8" LG	SA-36
105	7	W12 X 26 X 31 1/4" LG	SA-36
106	2	W12 X 26 X 39 3/4" LG	SA-36
107	4	W12 X 26 X 46 3/4" LG	SA-36
108	2	W6 X 15 X 46 3/4" LG	SA-36
109	2	W6 X 15 X 42 1/8" LG	SA-36
110	1	W6 X 15 X 7 5/8" LG	SA-36
111	2	W12 X 26 X 88 3/4" LG	SA-36
112	2	W12 X 26 X 63 3/4" LG	SA-36
113	1	CHECKER PLATE: 3/16" THK 48" X 210" LG	SA-36
114	1	CHECKER PLATE: 3/16" THK 84" X 210" LG	SA-36
115	1	CHECKER PLATE: 3/16" THK 25" X 41" LG	SA-36
116	1	PLATE: 1/2" THK X 16 1/2" X 25" LG	SA-36
117	4	PLATE: 3/8" THK X 9" DIA.	SA-36
118	2	FLAT BAR: 3/8" THK X 6" X 38" LG.	SA-36
119	2	PLATE: 3/8" THK X 8" X 12" LG.	SA-36
120	3	COUPLING: 1"-3000# NPT	SA-105
121	1	PLUG: 1"-3000# HEX NPT	SA-105
122	1	PIPE CAP: 2"-3000# NPT	SA-234-WPB
123	1	PIPE: 2" NOM SCH STD WT X 20" LG. (CTS)	SA-106-B
124	2	PIPE: 6" NOM SCH STD WT X 50" LG.	SA-106-B
125	2	PIPE: 1" NOM SCH 80 WT X 6" LG. (C.T.S.)	SA-106-B
126	2	ELBOW: 1"-3000# 90° ELBOW NPT	SA-105
127	2	ANGLE: 2" X 2" X 1/4" THK X 46 3/4"	SA-36
128	1	ANGLE: 2" X 2" X 1/4" THK X 42 1/8"	SA-36
129	1	FLAT BAR: 3/8" THK X 4" X 13" LG	SA-36
130	1	W12 X 26 X 15 1/4" LG	SA-36
131	2	PLATE: 1/2" THK X 3" X 11 7/16" LG.	SA-36

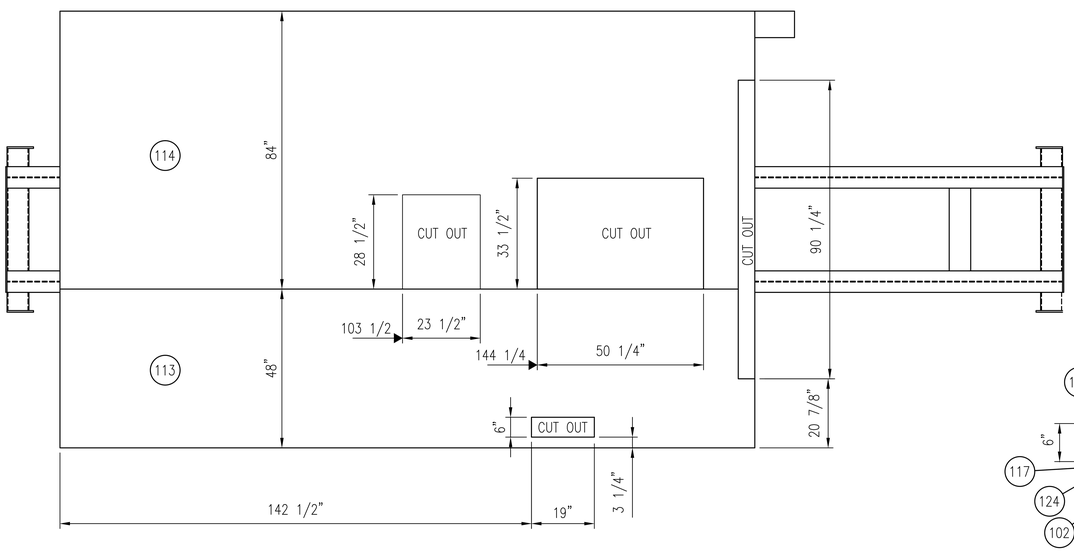

CHECKER PLATE DETAIL

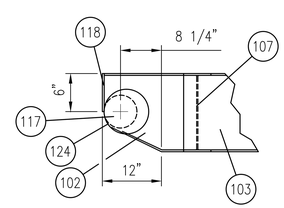

DRAG BAR DETAIL

NOT TO SCALE

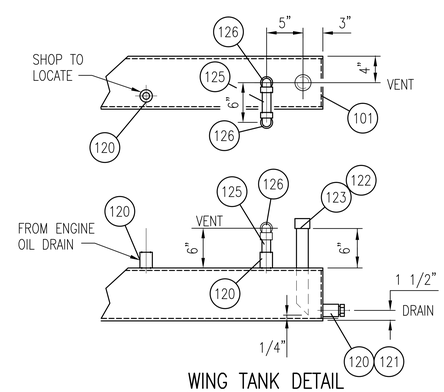

WING TANK DETAIL

NOT TO SCALE

GENERAL NOTES:

1. ALL TAIL DIMENSIONS FROM REFERENCE POINT.
2. WEIGHT OF SKID STEEL BASE: 7450 LBS
   WEIGHT OF RAISED BASE: 745 LBS
   TOTAL WEIGHT: 8195 LBS
3. COPE FLANGES WHERE REQUIRED.
4. ALL WELDS TO BE 1/4" FILLETS ALL AROUND, UNLESS OTHERWISE NOTED.
5. ALL CUT LENGTHS ARE EXACT TOL +0.0"/-0.125" (+0 MM/-3 MM)
6. ALL BOLT HOLES ARE 3/4"ø(19 MMø) UNLESS OTHERWISE NOTED.
7. SURFACE PREP: SANDBLAST TO SSPC-SP6.
   PRIMER: ONE COAT OF RED OXIDE PRIMER (SPEC # PRI-1)
   PAINT: ONE COAT OF PLATINUM GREY ENAMEL. (SPEC # FIN-1)
8. ● FULL PENETRATION STRENGTH WELD IS REQ'D AT THESE LOCATIONS.
9. PERIMETER AND ALL PANEL JOINTS OF CHECKER PLATE ARE TO BE SEAL WELDED. SKID MEMBERS TO UNDERSIDE OF CHECKER PLATE TO BE STITCH WELDED AT 2"(50 MM) OF FILLET ON 16"(406 MM) CENTERS.

FULL PENETRATION WELD

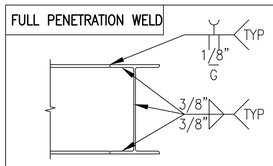

NOTES:

1. FULL PENETRATION WELD ON FLANGE.
2. BACK GOUGE TO SOUND METAL AFTER WELDING SQUARE WELD
3. USE SMAW (7018 WELDING ROD) ON BOTH SIDES.

REV.	DESCRIPTION	DATE	BY	APPR.
2	AS BUILT	JUL 3/01	SS	
1	ISSUED FOR CONSTRUCTION	DEC 19/00	SB	GO

PERMIT TO PRACTICE STAMP

ENGINEER STAMP

TOROMONT / TOROMONT PROCESS SYSTEMS

TITLE: SKID STEEL

FOR: CANADIAN HUNTER 200 HP BOOSTER COMPRESSOR

DRAWN BY: P. NOBLE	DATE: DEC 19/00
CHKD. BY: G. O'GALLAGHER	SCALE: 1/2" = 1'-0"
APPR. BY: G. O'GALLAGHER	W.O. No: 10862301
CUST. PO No:	DWG. No: 10682-301

SHEET No: 1 OF 5 | REV: 2