Cenovus Energy
Foster Creek West Pads SAP

FINAL DATABOOK

Hyundai Electric

Refrigerant Compressor Motor

2000 HP

KM-9700

PO: P482355

Table of Contents:

HYUNDAI ELECTRIC

Customer	:	Spartan Controls
Project Name	:	PROPAK-CENOVUS ENERGY
Hyundai Electric Document No.	:	20193136RMH840
Motor Tag No.	:	FCI-WS2-KM-9700
Customer Po No.	:	830040056

SPECIFICATION for INDUCTION MOTOR


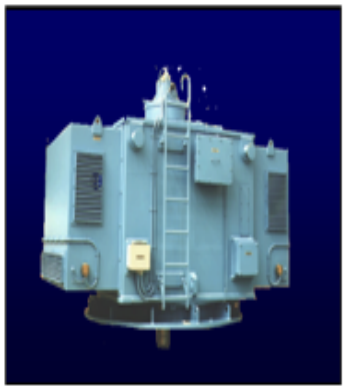

FINAL DOCUMENT PACKAGE - MAY 2020

2	2020-02-17	For working	J.Y.KIM	J.T.JUN	S.H.KO
1	2020-01-14	For working	J.Y.KIM	J.T.JUN	S.H.KO
0	2019-12-05	For Approval	J.Y.KIM	J.T.JUN	J.P.KIM
No.	DATE	DESCRIPTION	PREPARED BY	CHECKED BY	APPROVED BY

HYUNDAI ELECTRIC

AC INDUCTION MOTOR DATA SHEET

HYUNDAI ELECTRIC

Doc. No. MDS - 19RMH840

Project Name	PROPAK - CENOVUS ENERGY	Item No.	2 FCI-WS2-KM-9700	Quantity	1 set
Project No.	20193136RMH840				

GENERAL SPECIFICATION

Frame Size		450
Type		HNP3 451-28E
Enclosure(Protection)		WP II (IP 24W)
Method of Cooling		IC01
Rated Frequency		60 Hz
Number of Phases		3
Insulation Class		■ F □ B □ H
Temp. Rise at full load (by resistance method)		
	at 1.0 S.F	B class
Motor Location		■ Indoor □ Outdoor
Altitude		Less than 1000 meters
Relative Humidity		Less than 90 %
Ambient Temp.		10~40 ℃ (Max.)
Duty Type		Continuous (S1)
Service Factor		1.15
Mounting		■ B3 □ B5 □ V1 □
Bearing	Type	Split Sleeve
	DE/N-DE	BCF 9-90 / BCF 9-90
	Lubricant	SELF OIL (ISO VG 32)
External Thrust		N/A
Coupling Method		■ Direct □ V-Belt
Shaft Extension		■ Single □ Double
Application		Compressor
Area classification		Hazardous area
Type of Ex-Protection		Class I, Division 2, Group C&D, T3
Applicable Standard		IEC,IEEE,NEMA,CSA

PERFORMANCE DATA

Rated Output		2000 HP	
Number of Poles		2	
Rotor Type		Squirrel Cage	
Starting Method*		SOFT STARTER	
Rated Voltage		4000 V	
Current	Full Load	251.3 A	
	Locked-rotor**	600 %	1508.1 A
Efficiency			
	50% Load	94.2 %	
	75% Load	95.0 %	
	100% Load	95.2 %	
Power Factor(p.u)			
	50% Load	0.85	
	75% Load	0.89	
	100% Load	0.90	
Speed at Full Load		3554 rpm	
Torque			
	Full Load	408.9 kg·m	
	Locked-rotor**	85 %	
	Breakdown**	210 %	
Moment of Inertia (J)			
	Load	6.52 kg.m²	
	Motor 2	14.82 kg.m²	
Sound Pressure Level (No-load & mean value at 1m from motor)		85 dB(A)	
Vibration	(Bearing housing)	2.8 mm/sec(r.m.s)	
	(Shaft)	65 ㎛(peak-peak)	
Permissible number of consecutive starts	Cold	2 times	
	Hot	1 time	
Motor Weight		5300 kg	

REMARK

Note: Others not mentioned in this data sheet shall be in accordance with maker standard.
Above technical data are only design values and shall be guaranteed with tolerance of applicable standard.
Inspection and performance test shall be maker standard, if not mentioned.
* In case of Inverter-Fed Motor, performance data is based on sine wave tests.
** The data are based on rated voltage & frequency, and data are expressed as a percentage of full load value.

REMARK	REV.	CONTENTS	DATE	DSN	CHK	APPD
Revised Item No.	2	For working	2020-02-17	J.Y.KIM	J.B.KIM	S.H.KO
Add Item No.	1	For working	2020-01-14	J.Y.KIM	J.T.JUN	S.H.KO
	0	For Approval	2019-12-05	J.Y.KIM	J.T.JUN	J.P.KIM

HYUNDAI ELECTRIC	Instrument & Miscellaneous part list	Doc. No.
		IML-19RMH840

1. Instrument List

Designation	Specification	Q'ty	Range (If applicable)	Set point (If applicable)	Model	Manufacturer	Remarks
Winding Temperature Detector	PT100 Ω at 0deg.C Single 3wire Ex e	2ea/Phase	0 ~150 deg.C	Alarm:130deg.C Trip :135deg.C		Manufacturer standard	
Bearing Temperature Detector	PT100 Ω at 0deg.C Dual 3wire Ex e	1ea/Bearing	0 ~200 deg.C	Alarm: 95deg.C Trip : 100deg.C		Manufacturer standard	
Air Differential Pressure Switch		1st/Motor	0.4~1.6 inWTR	0.5 inWTR	1950-1-2F	DWYER	
Space Heater	1Ph 130V 300W	1st/Motor	N/A	N/A		Manufacturer standard	

2. Miscellaneous parts

Designation	Q'ty	Remark
Jacking bolt	1st / Motor	SUS (M24 x L70)
Dowel Pin	1st / Motor	SUS
Constant Level Oiler	1st / Motor	for DE, N-DE Bearing

REV	DATE	DSN	CHK	APPD
0	2019-12-05	J.Y.KIM	J.T.JUN	J.P.KIM

HYUNDAI ELECTRIC	SPEED-TORQUE & CURRENT CURVE	CURVE NO. STC - 19RMH840

Type	:	HNP3 451-28E		Motor Specification	:	2000 HP	2 P 60 Hz
Full Load Torque	:	408.9	kg.m	Speed at Full Load	:	3554	rpm
Motor moment of Inertia (J)	: 1	14.82	kg·m²	Rated Voltage	:	4000	V
Load moment of Inertia (J)	:	6.52	kg·m²	Full Load Current	:	251.3	A

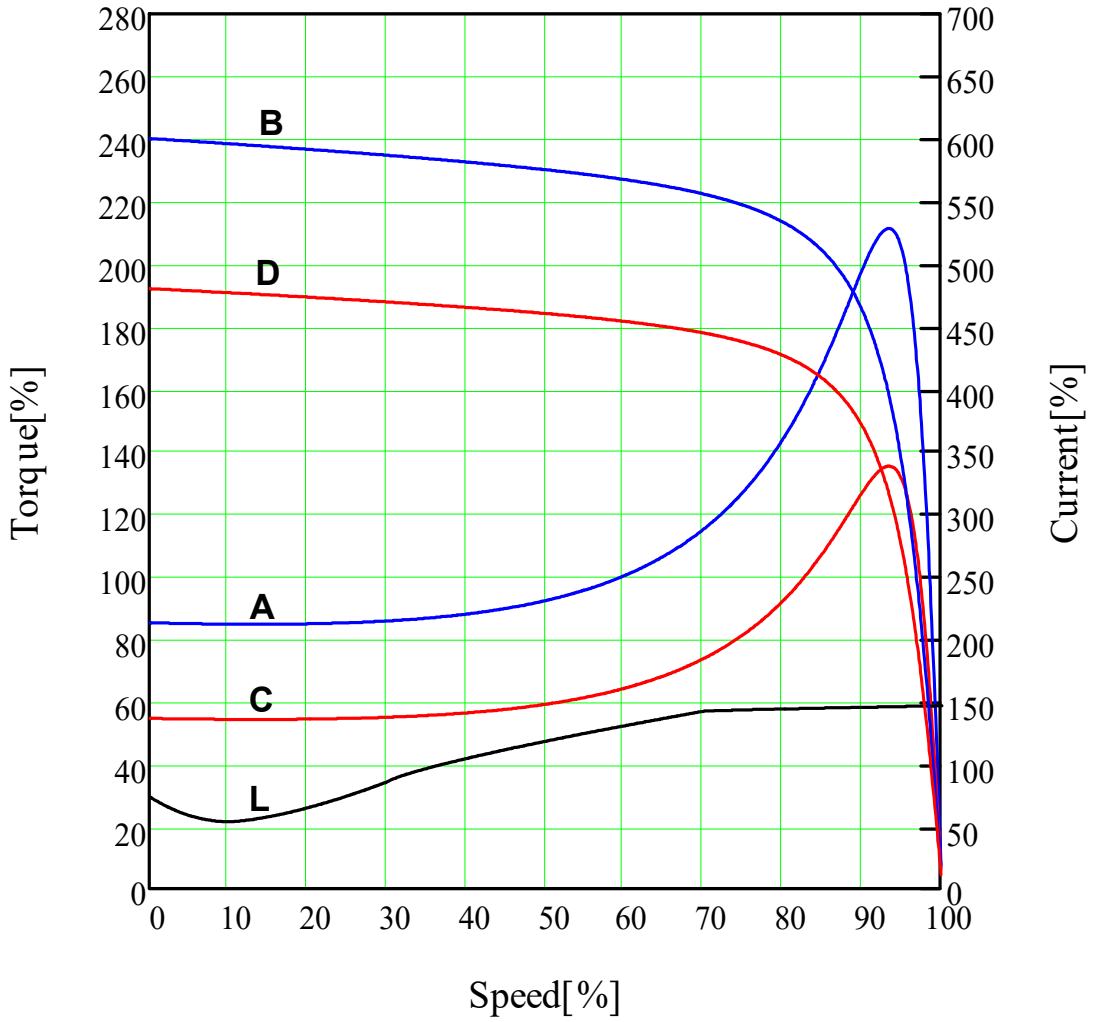

NOTE

A: SPEED-TORQUE CURVE AT RATED VOLTAGE
B: SPEED-CURRENT CURVE AT RATED VOLTAGE
C: SPEED-TORQUE CURVE AT 80% RATED VOLTAGE
D: SPEED-CURRENT CURVE AT 80% RATED VOLTAGE
L: SPEED-TORQUE CURVE OF THE LOAD

* J = GD^2 / 4

REMARK.	REV.	CONTENTS	DATE	DSN	CHK	APPD
	1	Rev.1	2020-02-24	J.H.SEO	Y.S.KIM	Y.W.JUNG
	0	ORIGINAL ISSUE	2019-11-15	J.H.SEO	Y.S.KIM	Y.W.JUNG

HYUNDAI ELECTRIC	THERMAL LIMIT & TIME CURRENT CURVE	CURVE NO. TLC - 19RMH840

Type	:	HNP3 451-28E		Motor Specification	:	2000 HP	2 P 60 Hz
Full Load Torque	:	408.9	kg.m	Speed at Full Load	:	3554	rpm
Motor moment of Inertia (J)	: △1	14.82	kg·m²	Rated Voltage	:	4000	V
Load moment of Inertia (J)	:	6.52	kg·m²	Full Load Current	:	251.3	A

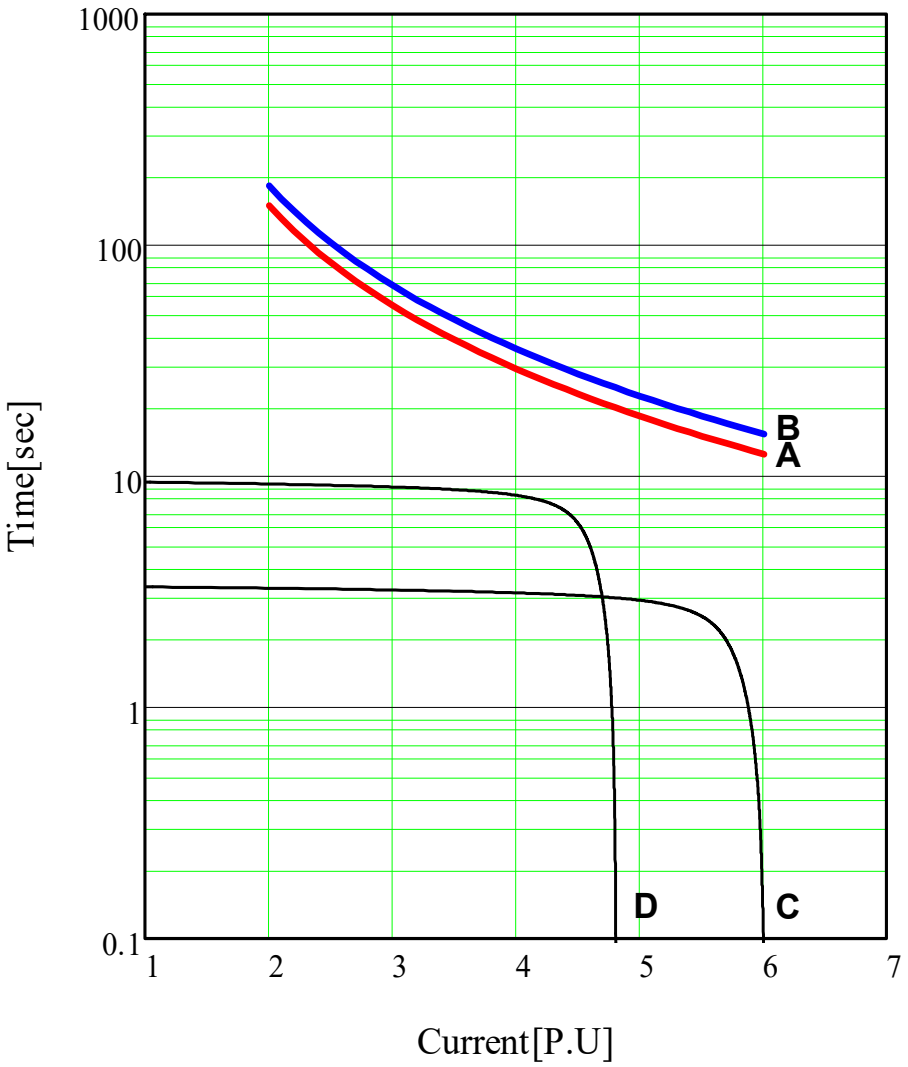

NOTE

A: THERMAL LIMIT CURVE AT HOT CONDITION (Approx. 13 sec)
B: THERMAL LIMIT CURVE AT COLD CONDITION (Approx. 15 sec)
△1 C: TIME - CURRENT CURVE AT RATED VOLTAGE (Approx. 3.4 sec)
△1 D: TIME - CURRENT CURVE AT 80% RATED VOLTAGE (Approx. 9.6 sec)

REMARK.	REV.	CONTENTS	DATE	DSN	CHK	APPD
	1	Rev.1	2020-02-24	J.H.SEO	Y.S.KIM	Y.W.JUNG
	0	ORIGINAL ISSUE	2019-11-15	J.H.SEO	Y.S.KIM	Y.W.JUNG

HYUNDAI ELECTRIC	SPEED VS POWER FACTOR CURVE	CURVE NO. SPC - 19RMH840

Type	:	HNP3 451-28E		Motor Specification	:	2000 HP 2 P	60 Hz
Full Load Torque	:	408.9	kg.m	Speed at Full Load	:	3554	rpm
Motor moment of Inertia (J)	: 1	14.82	kg·m²	Rated Voltage	:	4000	V
Load moment of Inertia (J)	:	6.52	kg·m²	Full Load Current	:	251.3	A

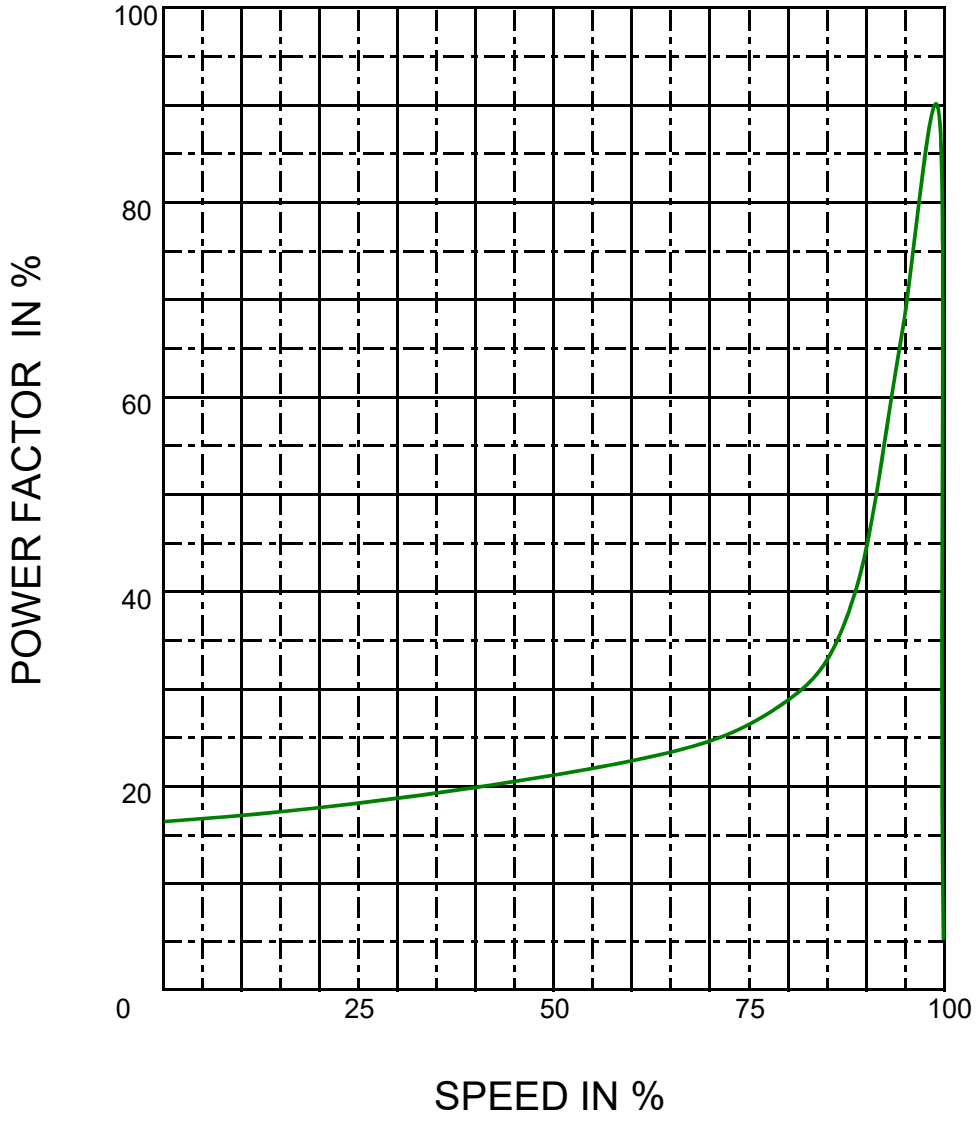

POWER FACTOR CURVE DURING THE STARTING CYCLE

REMARK	REV.	CONTENTS	DATE	DSN	CHK	APPD
	1	Rev.1	2020-02-24	J.H.SEO	Y.S.KIM	Y.W.JUNG
	0	ORIGINAL ISSUE	2019-11-15	J.H.SEO	Y.S.KIM	Y.W.JUNG

HYUNDAI ELECTRIC

본 도면은 현대일렉트릭(주) 재산이므로 허가없이 복사할 수 없음 (취급유의)

THIS DRAWING IS PROPRIETARY TO HYUNDAI ELECTRIC. NO PART OF THIS DRAWING MAYBE REPRODUCED WITHOUT THE PERMISSION OF HYUNDAI ELECTRIC.

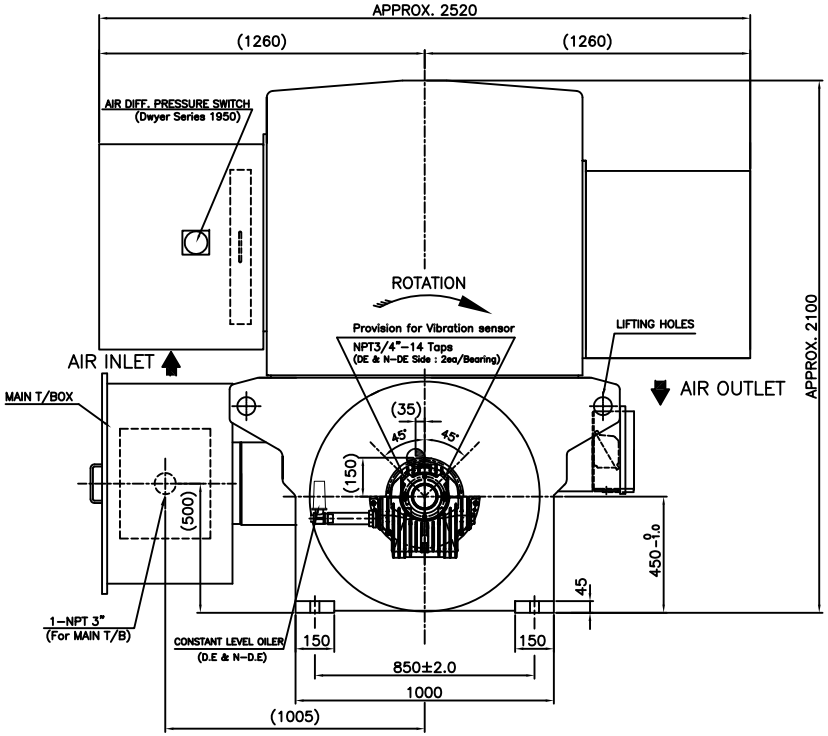

VIEW FROM DRIVE END SIDE

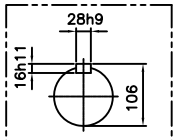

SHAFT DETAIL

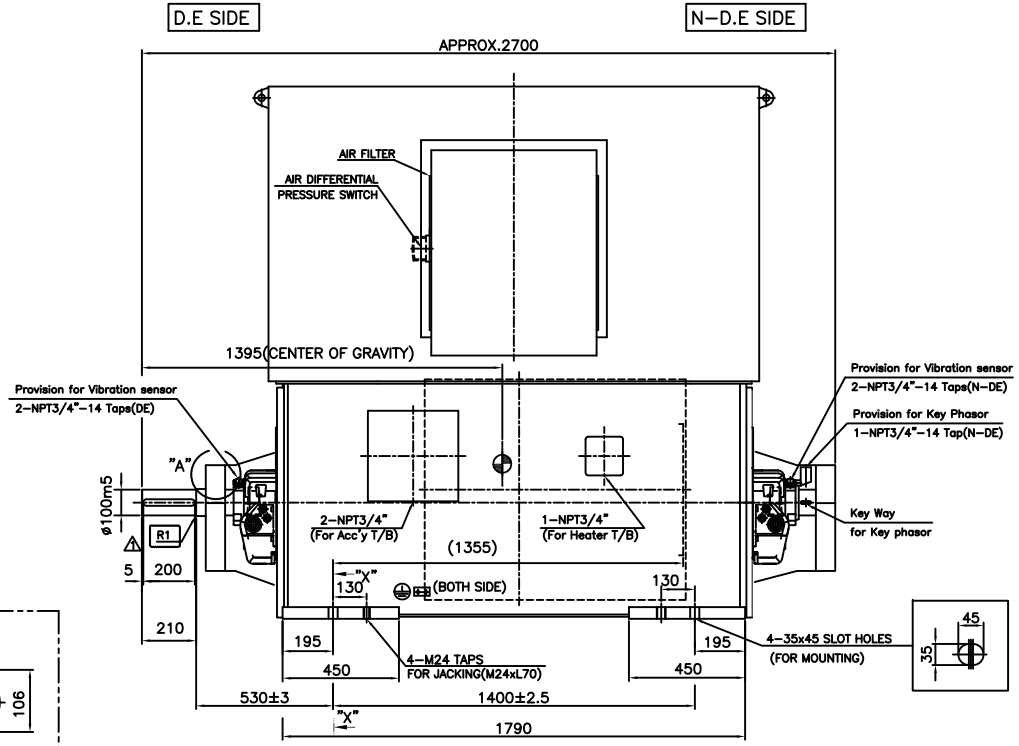

TYPE	OUTPUT ⚠	POLE	VOLT.	FREQ.	ENCLOSURE	INSUL. CLASS	MOUNT'G	BEARING		TOTAL WEIGHT	MAX. FOUNDATION LOAD BY 2 PHASE SHORT CIRCUIT TORQUE	
								D.E SIDE	N-D.E SIDE		DOWN	UP
HRP3 451-28E	2000 HP	2 P	4000 V	60Hz	IP24W	F	B 3	SLEEVE BEARING (SELF OIL LUB.)		5300 kg	66 kN	14 kN

The rotor is dynamically balanced with a half key mounted in the shaft extension; therefore, the coupling shall be balanced accordingly. And the coupling key shall be mounted correctly to prevent excessive vibration due to additional unbalance generated by incorrect key profile.

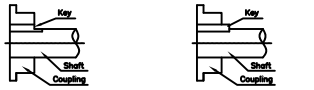

Correct Key Profile Incorrect Key Profile

TECHNICAL INFORMATION

1) BEARING

BEARING	Drive End	Non-Drive End
Bearing Type	SLEEVE	SLEEVE
Lubrication method	SELF OIL LUB	SELF OIL LUB
Oil Viscosity Class	ISO VG 32	ISO VG 32
Oil Quantity	2.9 liter	2.9 liter

2) CONTROL SETTING(Included Ambient Temp.):

	Winding(W.T.D)	Bearing(B.T.D)
Alarm	130 °C	95 °C
Trip	135 °C	100 °C

3) WINDING TEMPERATURE DETECTOR

A) Number and Type :2EA/Phase, Pt 100 ohm at 0°C, Single, Ex e

4) BEARING TEMPERATURE DETECTOR

A) Number and Type : 1EA/Bearing, Pt 100 ohm at 0°C, DUAL, Ex e

5) SPACE HEATER : 1 PHASE, 120 V, 200 W

6) AIR DIFFERENTIAL PRESSURE SWITCH

A) Number and Type : 1EA/Motor(Inlet), DWYER/1950-1-2F

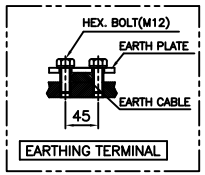

EARTHING TERMINAL

NOTE

1) THIS MOTOR IS DESIGNED TO BE OPERATED IN ARROW DIRECTION.

2) THE BOTH SIDE BEARINGS ARE INSULATED(D.E SIDE BEARING IS SHORT-CIRCUITED WITH A EARTHING LUG) TO PREVENT BEARING DAMAGE FROM SHAFT CURRENT

4) THIS MOTOR CANNOT WITHSTAND AXIAL THRUST LOAD COMING FROM THE DRIVE END SIDE.

5) RECOMMENDED VIBRATION SENSOR & KEY PHASOR LENGTH : 94mm

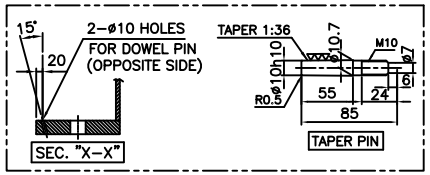

SEC. "X-X" TAPER PIN

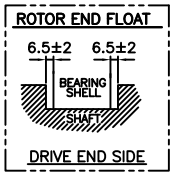

DRIVE END SIDE

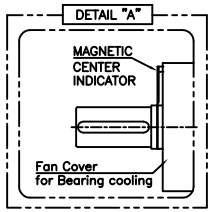

REV	DATE	CONTENTS	REVD BY	CHKD BY	CHKD BY	APPD BY
⚠	2020.01.14	Correct typo(2500->2000)	J.Y.KIM	J.T.JUN	---	S.H.KO

Q'TY	DESCRIPTION		MATERIAL	DIMENSION	WEIGHT	PART NO.	REMARK	NO.
APPD BY	J.P.KIM	UNIT	mm	SUBJECT			DWG SIZE	A2 (1:15)
CHKD BY	J.T.JUN	SCALE	1/15	TITLE				
CHKD BY	--	PROJEC'N	3rd Angle	OUTLINE				
DSND BY	김지현	DATE	2019-12-04					

HYUNDAI ELECTRIC

REF. NO	20193136RMH840	Sheet No.	of
DWG NO	HM-099283	Revision No.	1

HYUNDAI ELECTRIC

본 도면은 현대일렉트릭(주) 재산이므로 허가없이 복사할 수 없음 (취급유의)

THIS DRAWING IS PROPRIETARY TO HYUNDAI ELECTRIC. NO PART OF THIS DRAWING MAYBE REPRODUCED WITHOUT THE PERMISSION OF HYUNDAI ELECTRIC.

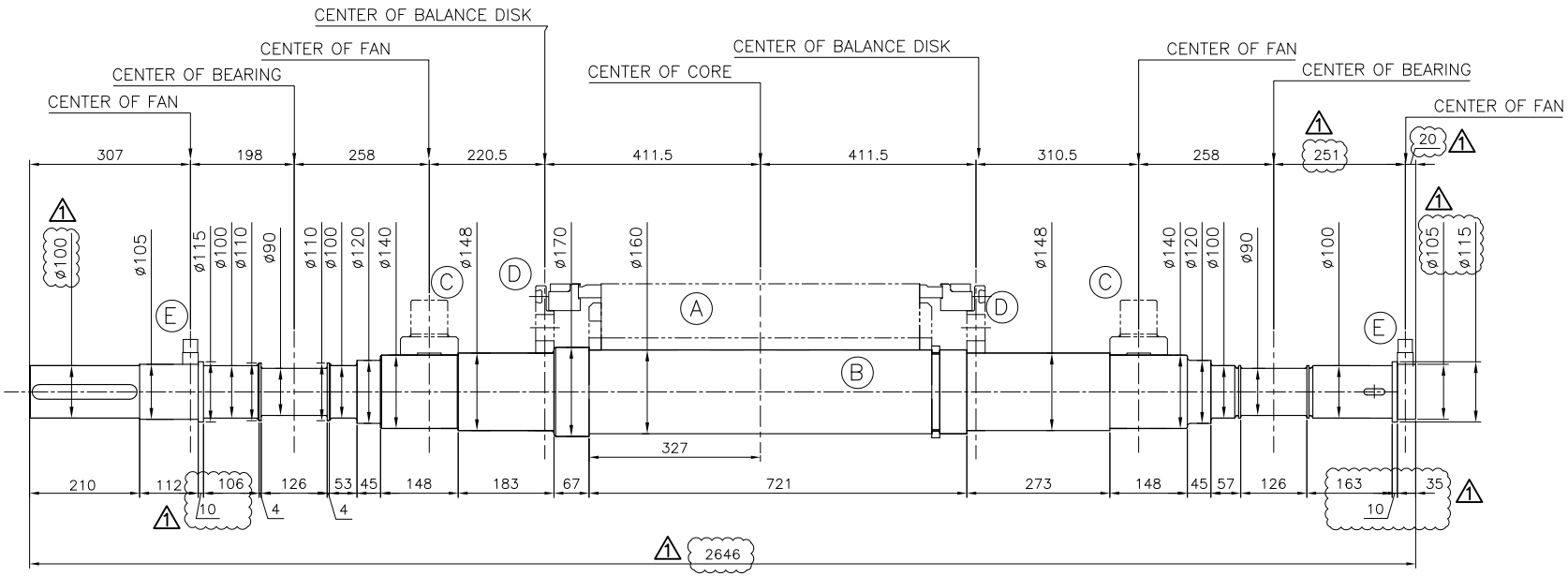

RATED OUTPUT	POLE	FREQ.	VOLTAGE
2000 HP	2	60 Hz	4000V

		Ⓐ CORE & ROTOR BAR ASS'Y	Ⓑ SHAFT 1	Ⓒ INTERNAL FAN (2EA)	Ⓓ BALANCE DISK (2EA)	Ⓔ BEARING COOLING FAN (2EA)	ROTOR COMPLETE
WEIGHT	kg	500	293	36	31	2	1 862
MOMENT OF INERTIA(J)	kg.m²	15.13	0.75	0.34	0.58	0.01	14.82

$GD^2 = 4J$

NOTE:
1. SHAFT MATERIAL : SF590A
2. SHAFT STIFFNESS,
   -BETWEEN DRIVE END SIDE AND CENTER LINE OF CORE
   1 $K = 9.74 \times 10^5$ Nm/rad
3. SHEARING MODULUS, $G = 8.3 \times 10^5$ kgf/cm²
4. ULTIMATE TENSILE STRENGTH = Min. 900 MPa

Q'TY	DESCRIPTION	MATERIAL	DIMENSION	WEIGHT	PART NO.	REMARK	NO.

APPD BY	S. H. KO	UNIT	mm	SUBJECT	2019RMH840
CHKD BY	J. T. JUN	SCALE	1/10	DWG SIZE	A3 (1:10)
CHKD BY	———	PROJEC'N	3rd Angle	TITLE	SHAFT DIMENSION DRAWING
DSND BY	김주필	DATE	2020-01-14		
HYUNDAI ELECTRIC				REF. NO	
				DWG NO	3M-232154
				Sheet No.	of
				Revision No.	1

REV	DATE	CONTENTS	REVD BY	CHKD BY	CHKD BY	APPD BY
1	2020.02.21	Revision of Mark 1	J.Y.KIM	J.S.PARK	J.B.KIM	S.H.KO

HYUNDAI ELECTRIC

본 도면은 현대일렉트릭(주) 재산이므로 허가없이 복사할 수 없음 (취급유의)

THIS DRAWING IS PROPRIETARY TO HEES. NO PART OF THIS DRAWING MAYBE REPRODUCED WITHOUT THE PERMISSION OF HEES.

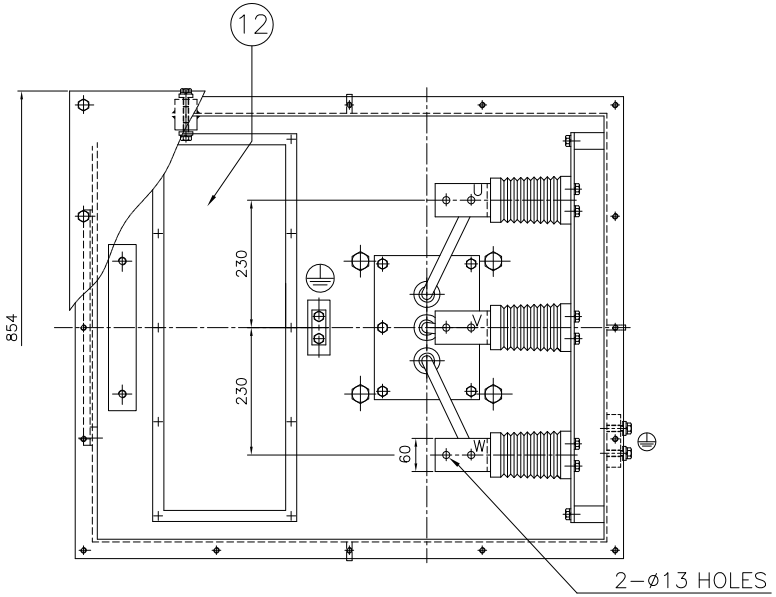

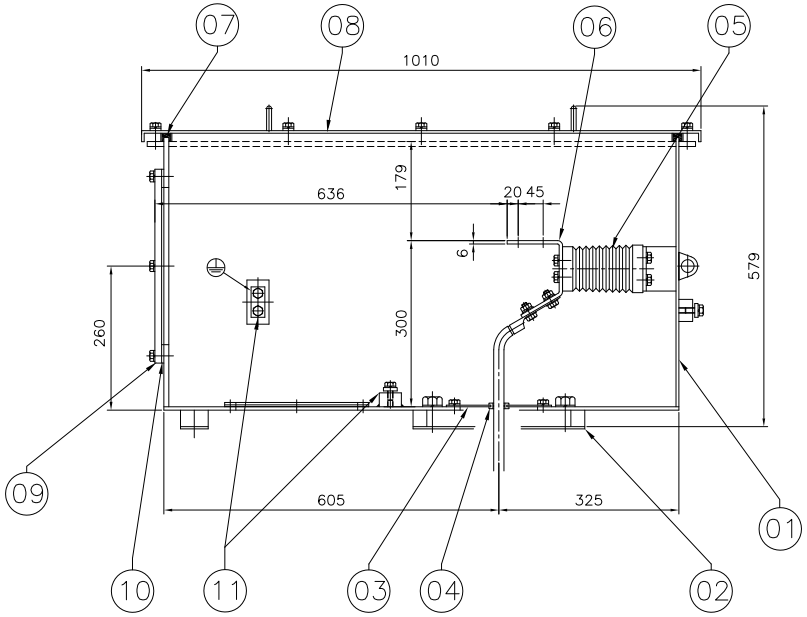

⚠ CAUTION

Relation between terminal markings and direction of rotation

Application rule : IEC / NEMA MG-1

1. Direction of rotation (View from motor drive end.)

① The terminal marking is arranged that clockwise rotation is obtained when the alphabetical sequence of the letters(e.g. U, V, W) corresponds to the time sequence of the system phase voltages.

② For counter clockwise rotation, the time sequence of the system phase voltages shall be reversed by rearrangement of the supply cables, (e.g. L2 and L3)

2. The motor is designed to be operated in arrow direction which is Indicated on motor.

Terminal Marking arrangement

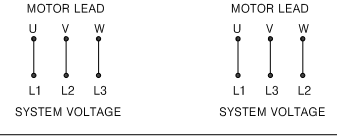

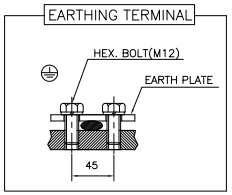

DESCRIPTION	NO.
PRESSURE DIAPHRAM	12
EARTH TERMINAL ASS'Y	11
PACKING	10
GLAND PLATE	9
TERMINAL BOX COVER	8
PACKING	7
CONNECTOR	6
INSULATOR	5
CABLE GROMMET	4
CABLE HOLDER	3
PACKING	2
TERMINAL BOX BODY	1

Q'TY	DESCRIPTION	MATERIAL	DIMENSION	WEIGHT	PART NO.	REMARK	NO.

APPD BY	J.P.KIM	UNIT	mm	SUBJECT	DWG SIZE A3 (1/10)
CHKD BY	J.T.JUN	SCALE	NONE	TITLE	MAIN T/BOX ASS'Y
CHKD BY	–	PROJEC'N	3각법(3rd Angle)		
DSND BY	J.Y.KIM	DATE	2019-12-05		
HYUNDAI ELECTRIC				REF. NO	Sheet No. of
				DWG NO 3M-121419	Revision No. 0

REV	DATE	CONTENTS	REVD BY	CHKD BY	CHKD BY	APPD BY

HYUNDAI ELECTRIC

본 도면은 현대일렉트릭(주) 재산이므로 허가없이 복사할 수 없음 (취급유의)

THIS DRAWING IS PROPRIETARY TO HYUNDAI ELECTRIC. NO PART OF THIS DRAWING MAYBE REPRODUCED WITHOUT THE PERMISSION OF HYUNDAI ELECTRIC.

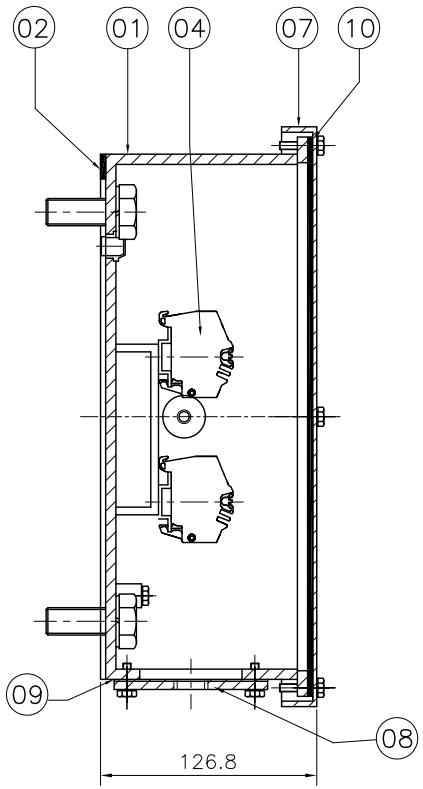

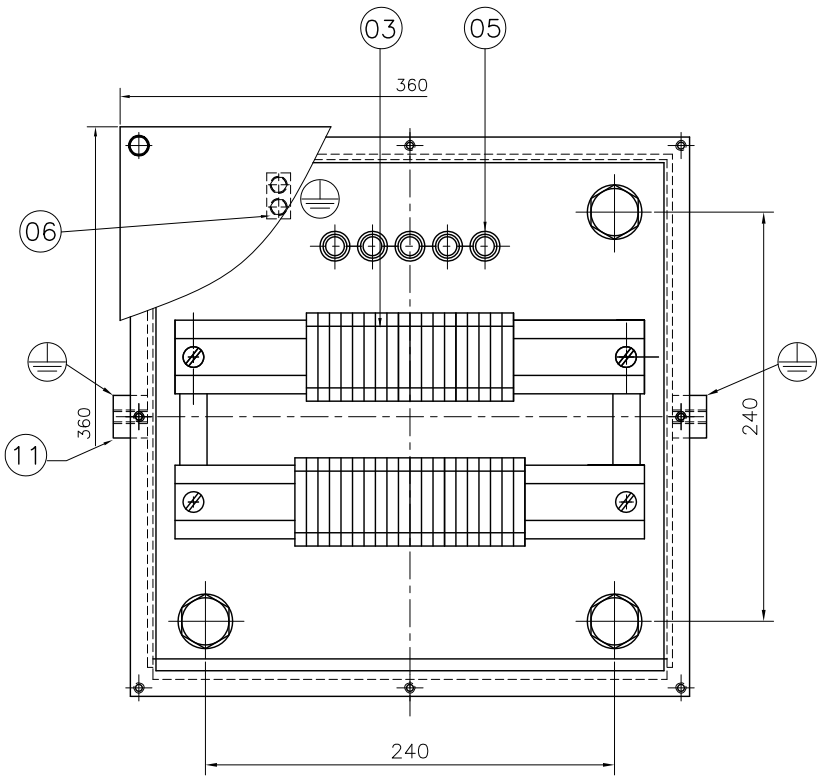

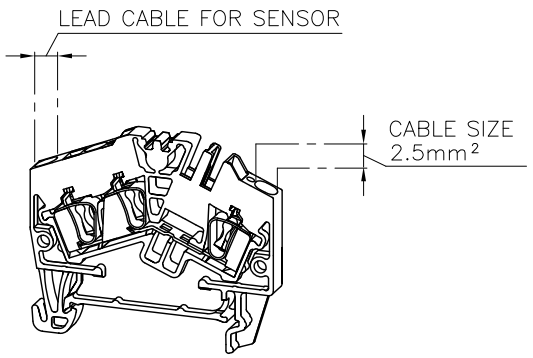

ZDU2.5-2/3AN(BLUE)

DETAIL OF TERMINAL BLOCK(Maker: Weidmuller)

DESCRIPTION	NO.
EARTH TERMINAL ASS'Y(M8)	11
GASKET	10
GASKET	9
CABLE GLAND PLATE	8
TERMINAL BOX COVER	7
EARTH TERMINAL ASS'Y(M5)	6
GROMMET	5
TERMINAL BLOCK	4
RAIL	3
GASKET	2
TERMINAL BOX BODY	1

REV	DATE	CONTENTS	REVD BY	CHKD BY	CHKD BY

Q'TY	DESCRIPTION	MATERIAL	DIMENSION	WEIGHT	PART NO.	REMARK	NO.

APPD BY	J.P.KIM	UNIT	mm	SUBJECT	DWG SIZE A3 (1:2.5)
CHKD BY	J.T.JUN	SCALE	1/2.5	TITLE	ACC'Y T/B ASS'Y
CHKD BY	--	PROJEC'N	3 면(3rd Angle)		
DSND BY	J.T.KIM	DATE	2019-12-05		
HYUNDAI ELECTRIC				REF. NO	
				DWG NO	3M-085290
				Revision No.	0

HYUNDAI ELECTRIC

본 도면은 현대일렉트릭(주) 재산이므로 허가없이 복사할 수 없음 (취급유의)

THIS DRAWING IS PROPRIETARY TO HEES. NO PART OF THIS DRAWING MAYBE REPRODUCED WITHOUT THE PERMISSION OF HEES.

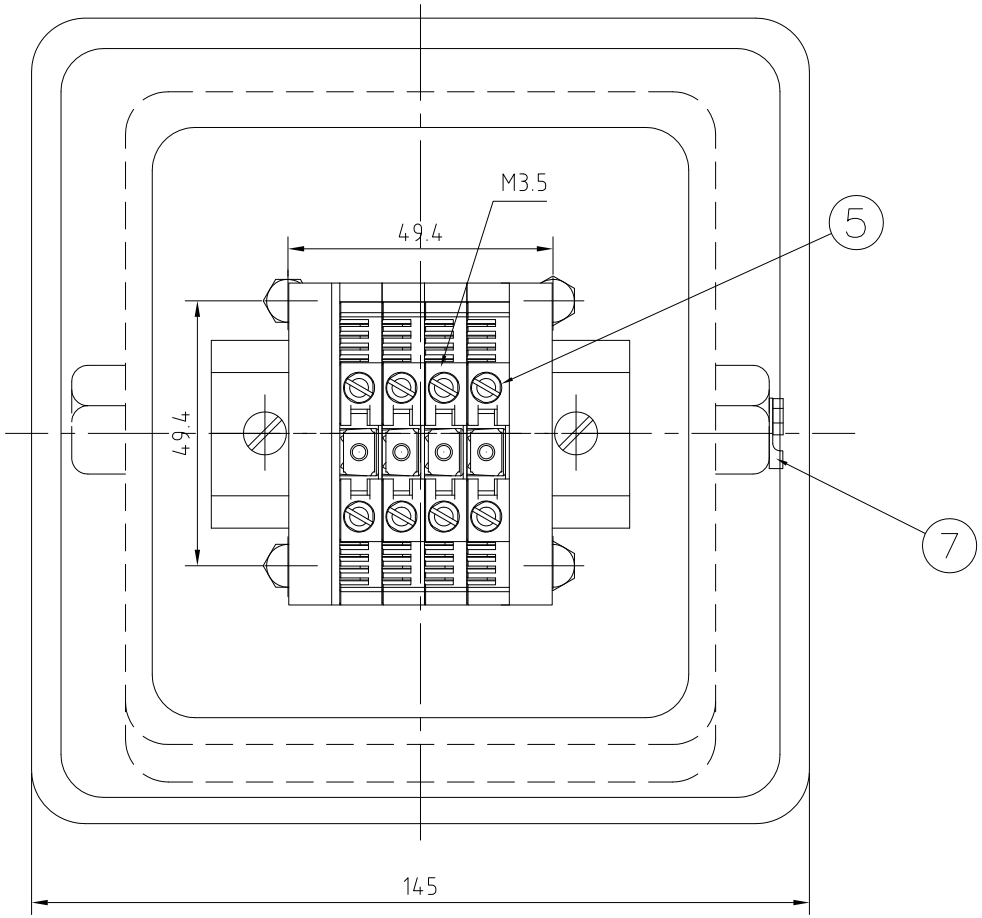

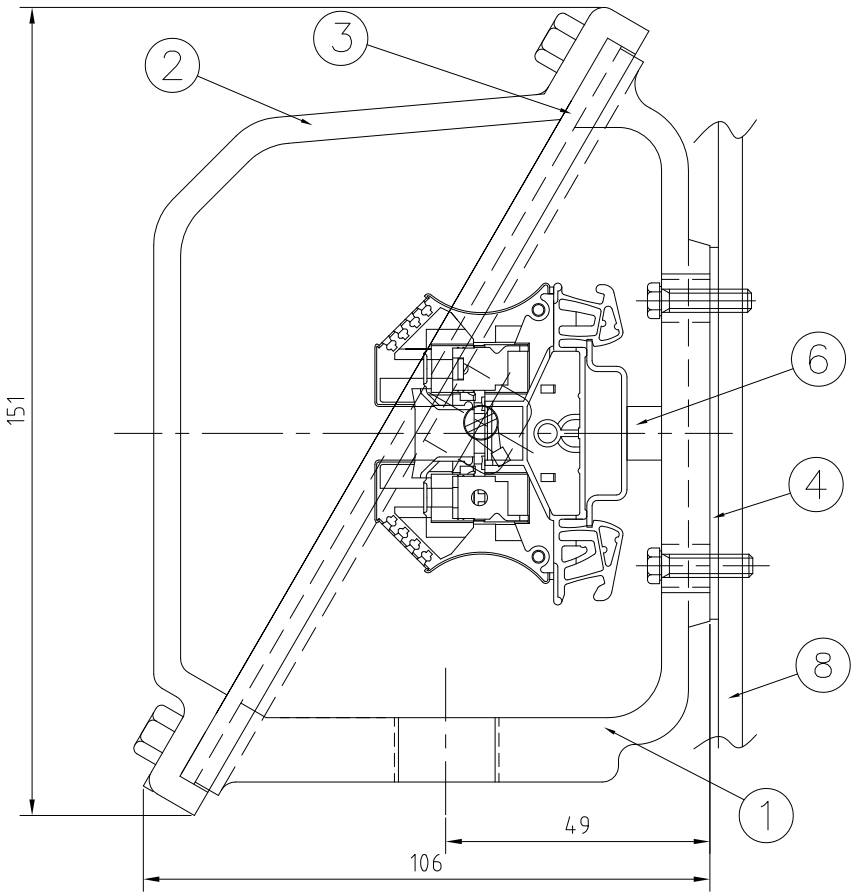

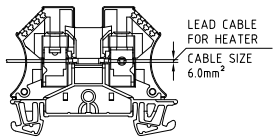

WDU 6

DETAIL OF TERMINAL BLOCK(Maker: Weidmuller)

SIDE COVER PLATE	8
EARTH'G TERMINAL LUG(M5)	7
SUPPORT RING	6
TERMINAL BLOCK	5
GASKET(C/B)	4
PACKING(COVER)	3
T/BOX COVER	2
T/BOX BODY	1
DESCRIPTION	NO.

REV	DATE	CONTENTS	REVD BY	CHKD BY	CHKD BY	APPD BY

Q'TY	DESCRIPTION	MATERIAL	DIMENSION	WEIGHT	PART NO.	REMARK	NO.

APPD BY	J.P.KIM	UNIT	MM	SUBJECT	SUBJECT
CHKD BY	J.T.JUN	SCALE	1/8		DWG SIZE A3(1:8)
CHKD BY	--	PROJEC'N	3각법(3rd Angle)	TITLE	HEATER T/BOX ASS'Y
DSND BY	J.Y.KIM	DATE	2019-12-05		
HYUNDAI ELECTRIC				REF. NO	
				DWG NO	3M-118347
				Revision No.	0

HYUNDAI ELECTRIC

본 도면은 현대일렉트릭(주) 재산이므로 허가없이 복사할 수 없음 (취급유의)

THIS DRAWING IS PROPRIETARY TO HYUNDAI ELECTRIC. NO PART OF THIS DRAWING MAYBE REPRODUCED WITHOUT THE PERMISSION OF HYUNDAI ELECTRIC.

ACC'Y T/BOX WIRING DIAGRAM

Winding temp. sensor
(Pt 100 ohm at 0°C, 3-Wire, Single)

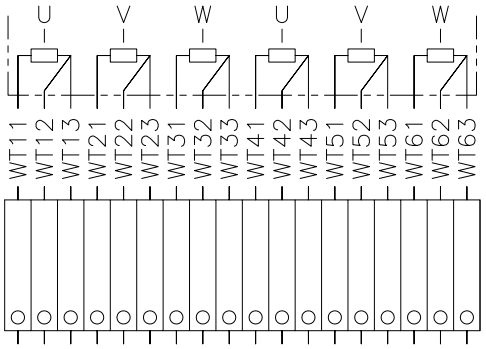

Bearing temp. sensor
(Pt 100 ohm at 0°C, 3-Wire, Dual)

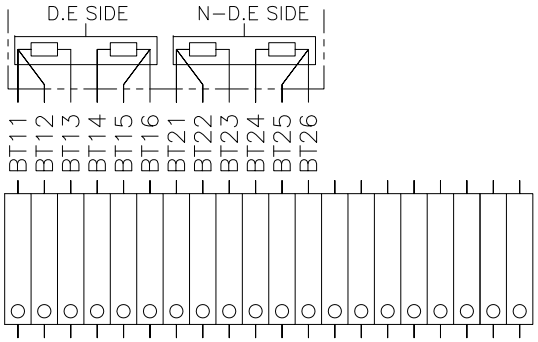

NOTE

1) WT11,12,13/41,42,43 ; Winding temp. sensor (U)
2) WT21,22,23/51,52,53 ; Winding temp. sensor (V)
3) WT31,32,33/61,62,63 ; Winding temp. sensor (W)

} Pt 100 ohm at 0 °C

4) BT11,12,13,14,15,16 : Bearing temp. sensor (DE Side)
5) BT21,22,23,24,25,26 : Bearing temp. sensor (N-DE Side)

} Pt 100 ohm at 0 °C

HEATER T/BOX WIRING DIAGRAM

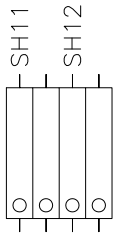

NOTE

1) SH11, 12 ; SPACE HEATER

AIR DIFFERENTIAL PRESSURE SWITCH

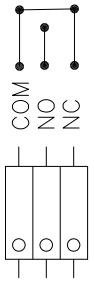

S/W Type : SPDT Rating 15A at 125,250,480VAC

REV	DATE	CONTENTS	REVD BY	CHKD BY	CHKD BY	APPD BY

APPD BY	J.P.KIM	UNIT	MM	SUBJECT	DWG SIZE A3 (N/S)
CHKD BY	J.T.JUN	SCALE	N/A	TITLE	WIRING_DIAGRAM
CHKD BY		PROJEC'N	3각법(3rd Angle)		
DSND BY	J.Y.KIM	DATE	2019-12-05		
HYUNDAI ELECTRIC				REF. NO	Sheet No. of
				DWG NO 3M-110000	Revision No. 0

REV	DATE	CONTENTS	REVD BY	CHKD BY	CHKD BY	APPD BY
1	2020.01.14	ADD TAG No. PLATE AND REVISED SERVICE FACTOR	J.P.KIM	J.T.JUN	——	S.H.KO
2	2020.02.17	REVISED TAG No.	J.Y.KIM	J.B.KIM	——	S.H.KO

HYUNDAI 3 PHASE INDUCTION MOTOR

C US

OUTPUT	2000HP, 2P	INPUT	3Phase,4000V,251.3A,60Hz
FRAME SIZE	450	ROTOR TYPE	SQUIRREL CAGE
TYPE	HNP3 451-28E	DUTY TYPE	S1 (Continuous)
ENCLOSURE TYPE	WP II (IP24W)	SERVICE FACTOR	1.15 1
SPEED AT FULL LOAD	3554 rpm	INSULATION CLASS	F
AMBIENT TEMP.	10～40 °C	TEMPERATURE RISE	B class
EFFICIENCY	95.2 %	POWER FACTOR	0.90
BEARING(D.E)	SLEEVE	BEARING(N-D.E)	SLEEVE
SPACE HEATER	1 ø 120 V 200 W		
WEIGHT	5300 kg	CODE LETTER	F
SERIAL NO.		MANUFACT'G DATE	
Class I, Division 2, Group C&D, T3			

MADE IN KOREA

4M-091240

20193136RMH840001

2

Motor Tag No.

FCI-WS2-KM-9700

LUBRICATION FOR BEARING

VISCOSITY ISO VG 32 SAE

FORCED LUB.	OIL RATE	D-END BEARING	ℓ /min
		ND-END BEARING	ℓ /min
	OIL PRESSURE		kgf/cm²
SELF LUB.	OIL Q'TY	D-END BEARING 2.9	ℓ
		ND-END BEARING 2.9	ℓ

OIL CHARGING DURING STANDSTILL ONLY

Q'TY	DESCRIPTION	MATERIAL	DIMENSION	WEIGHT	PART NO.	REMARK	NO.

APPD BY	J.P.KIM	UNIT	mm
CHKD BY	J.H.YOO	SCALE	Non Scale
CHKD BY		PROJEC'N	3rd Angle
DSND BY	C.M.EOM	DATE	2019-11-07

SUBJECT

DWG SIZE S/A4(1-1)

TITLE NAME PLATE

HYUNDAI ELECTRIC

REF. NO

Sheet No. of

DWG NO 4M-077056

Revision No. 2

HYUNDAI ELECTRIC

본 도면은 현대일렉트릭(주) 재산이므로 허가없이 복사할 수 없음 (취급유의)

THIS DRAWING IS PROPRIETARY TO HYUNDAI ELECTRIC. NO PART OF THIS DRAWING MAYBE REPRODUCED WITHOUT THE PERMISSION OF HYUNDAI ELECTRIC.

1. SCOPE

This procedure defines surface preparation and the painting procedure at shop stage.

Non-ferrous metals and stainless steel will not be painted, unless otherwise specified.

2. SURFACE PREPARATION

2.1 Oil, grease and crayon marks will be cleaned off with petro chemical solvent-according to SSPC SP-1.

2.2 Blast cleaning will be carried out in accordance with Sa2.5 (or SSPC SP-10) standard.

2.3 Surface to be coated will be cleaned, dried and free from all contaminations.

2.4 Rust, weld spatter, cutting burr and other surface contaminants will be removed by the power and hand tools before coating.

2.5 In principle, surface preparations will be done only when the weather condition allows.

Painting work must be done within 4 hours after surface completion.

<Recommended temperature>

-. Air temperature: 5 ~ 40 deg. C

-. Relative humidity: under 85%

-. Surface temperature: 3 deg.C above the dew point

3. PAINTING PROCEDURE

3.1 Preparation of paint

Paint shall be prepared for the application according to the manufacturer's datasheet.

Individual components of multi-component paints must be stirred before mixing.

If thinner is required, only designated thinner shall be used and thinning rate may be adjusted according to the job condition.

3.2 Application method

3.2.1 Airless spray may be most effective in obtaining specified thickness at once.

3.2.2 Keep the spray gun at constant a distance (approx. 30cm) and perpendicular to the surfaces.

3.2.3 Brush or roller shall only be used for tiny areas and welding seams.

3.3 Application work

3.3.1 Welding seams, corners and edges shall always receive a stripe coat before full coating in order to obtain adequate film build.

3.3.2 Bolt jointing surroundings and flange matching faces shall be blanked off or otherwise protected from painting unless otherwise accepted.

3.3.3 D.F.T shall be the painting specification.

3.3.4 Each coat shall be allowed enough time to dry between coats.

3.3.5 Painting work is only allowed to be completed inside of the shop area.

4. INSPECTION

4.1 Inspection of surface perparation

4 .1.1 Surface cleanliness shall be checked by visual or ISO hand book in accordance with ISO8501:1

4.1.2 Surface roughness shall be cheked by replica tape in accordance with ISO8503-5

4 .2 Painting inspection

4.2.1 Visual check (Wrinkling, sagging, pin-hole and other surface defects)

4.2.2 N.D.F.T shall be checked every coat according to ISO12944-5

4.2.3 Areas that are required to be painted, but are not painted must be identified.

T hese areas must be touched-up following the requirements identified in this paint procedure.

5. COATING REPAIR

5 .1 Defective paint work will be removed, and the surface re-prepared and repainted according to the original specifications.

5 .2 Damaged parts on the coated surface will be cleaned by power tool and touched-up with the same coating system initially applied.

6. PAINTING SYSTEM

6.1 Item : Motor

6.2 Painting schedule

Location	Surface preparation	Coat	Painting details
Internal	Sa2.5	Primer	EPOXY PRIMER Brand : Korepox Primer EP1160(H) Manufacture : KOREA CHEMICAL CO., LTD Color :Gray Nominal Dry film thickness : 60 ㎛ Coating method : spray Curing method: Air drying
External	Sa2.5	Primer	EPOXY PRIMER Brand : Korepox Primer EP1160(H) Manufacture : KOREA CHEMICAL CO., LTD Color :Gray Nominal Dry film thickness : 60 ㎛ Coating method : spray Curing method: Air drying
		Final	POLYURETHANE Brand : Korethan Enamel UT6780(S) Manufacture : KOREA CHEMICAL CO., LTD Color :MUNSELL NO. 7.5 BG 6/1 Nominal Dry film thickness : 40 ㎛ Coating method : spray and/or brush Curing method : Air drying
	Total Nominal Dry film thickness		100 ㎛ * Stainless steel parts will not be painted.

Series 1950

Explosion-proof Differential Pressure Switches

Compact, Low Cost, Explosion-proof and Weatherproof

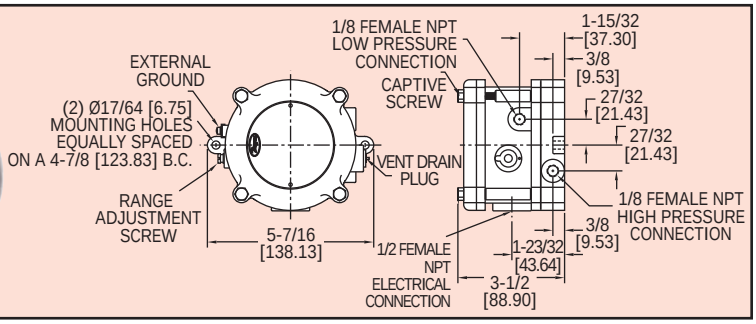

Model 1950 Explosion-Proof Differential Pressure Switch combines the best features of the popular Dwyer® Series 1900 Pressure Switch with an integral explosion-proof and weatherproof housing, making it an exceptional value for either application. It is CE, UL and CSA listed, FM approved for use in Class I, Div 1, Groups C and D, Class II Groups E, F, and G and Class III hazardous atmospheres (NEMA 7 & 9), Raintight NEMA 3 (IP54). Weatherproof features include a drain plug and O-ring seal in cover. Electrical connections are easily made by removing front cover. For convenience the set point adjustment screw is located on the outside of the housing. Twelve models offer set points from .03 to 20 in w.c. (7.5 to 5 kPa) and from .5 to 50 psi (0.035 to 3.5 bar). The unit is very light and compact – about half the weight and bulk of other explosion-proof or weather-proof switches with separate enclosures.

SPECIFICATIONS
Service: Air and non-combustible, compatible gases.
Wetted Materials: Consult factory.
Temperature Limits: -40 to 140°F (-40 to 60°C); 0 to 140°F (-17.8 to 60°C) for 1950P-8, 15, 25, and 50. -30 to 130°F (-34.4 to 54.4°C) for 1950-02.
Pressure Limits: Continuous: 1950's - 45 in w.c. (0.11 bar); 1950P's - 35 psi (2.41 bar); 1950P-50 only - 70 psi (4.83 bar). Surge: 1950's - 10 psi (0.69 bar), 1950P's - 50 psi (3.45 bar), 1950P-50 only - 90 psi (6.21 bar).
Enclosure Rating: NEMA 3 (IP54), NEMA 7 & 9.
Switch Type: Single-pole double-throw (SPDT).
Electrical Rating: 15 A @, 125, 250, 480 VAC, 60 Hz. Resistive 1/8 HP @ 125 VAC, 1/4 HP @ 250 VAC, 60 Hz.
Electrical Connections: 3 screw type, common, normally open and normally closed.
Process Connections: 1/8″ female NPT.
Mounting Orientation: Diaphragm in vertical position. Consult factory for other position orientations.
Set Point Adjustment: Screw type on top of housing.
Weight: 3.25 lb (1.5 kg); 1950-02 model, 4.4 lb (2 kg).
Agency Approvals: CE, UL, CSA, FM.

Series 1950 Switches - Operating Ranges and Dead Bands

Model	Range, Inches W.C.	Approximate Dead Band at Min. Set Point	Approximate Dead Band at Max. Set Point	Price
1950-02-2S	.03 to .10	.025	.05	**$188.75**
1950-00-2F	.07 to .15	.04	.05	**130.00**
1950-0-2F	.15 to .50	.10	.15	**130.00**
1950-1-2F	.4 to 1.6	.15	.20	**130.00**
1950-5-2F	1.4 to 5.5	.30	.40	**130.00**
1950-10-2F	3 to 11	.40	.50	**130.00**
1950-20-2F	4 to 20	.40	.60	**130.00**

Model*	Range, PSID	Approximate Dead Band at Min. Set Point	Approximate Dead Band at Max. Set Point	Price
1950P-2-2F	0.5 to 2	.3	.3	**$151.00**
1950P-8-2F	1.5 to 8	1.0	1.0	**151.00**
1950P-15-2F	3 to 15	.9	.9	**151.00**
1950P-25-2F	4 to 25	.7	.7	**151.00**
1950P-50-2F	15 to 50	1.0	1.5	**151.00**

CAUTION: For use only with air or compatible gases. Applications with hazardous atmospheres and a single positive pressure may require special venting. *P=PSID range models

Series 1950G

Explosion-proof Differential Pressure Switch

Explosion-proof, Weatherproof, Compatible with Natural Gases

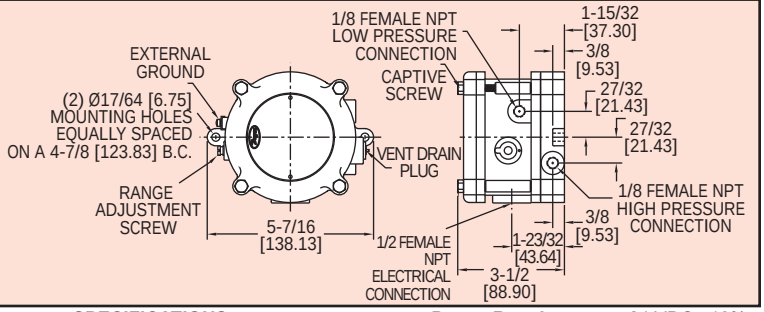

The Model 1950G Explosion-Proof Switch combines the best features of the popular Dwyer® Series 1950 Pressure Switch with the benefit of natural gas compatibility. Units are rain-tight for outdoor installations, and are UL listed for use in Class I, Groups A, B, C, & D; Class II, Groups E, F, & G and Class III atmospheres, Directive 94/9/EC (ATEX) Compliant for CE Ex II 2G Exd IIB + H_2 T6, CSA & FM approved for Class I, Div 1, Groups B, C, D; Class II, Div 1, Groups E, F, G and Class III atmospheres IECEx Exd IIB + H_2 T6 (-40°C < Ta < +60°C). The 1950G is very compact, about half the weight and bulk of equivalent conventional explosion-proof switches.

Easy access to the SPDT relay and power supply terminals is provided by removing the top plate of the aluminum housing. A supply voltage of 24 VDC, 120 or 240 VAC is required. A captive screw allows the cover to swing aside while remaining attached to the unit. Adjustment to the set point of the switch can be made without disassembly of the housing.

SPECIFICATIONS
Service: Air and compatible combustible gases.
Wetted Materials: Contact factory.
Temperature Limits: 0 to 140°F (-17 to 60°C).
Note: Set point drift may occur with ambient temperature changes.
Pressure Limits: 45 in w.c. (11.2 kPa) continuous; 10 psig (68.95 kPa) surge.
Enclosure Rating: NEMA 3 (IP54), NEMA 7 & 9.
Switch Type: 1 Form C relay (SPDT).
Electrical Rating: 10A, 120/240 VAC, 28 VDC. Resistive 50 mA, 125 VDC.
Power Requirements: 24 VDC ±10%. 120 or 240 VAC ±10% optional.
Electrical Connections: Internal terminal block.
Process Connections: 1/8″ female NPT.
Mounting Orientation: Diaphragm in vertical position. Consult factory for other position orientations.
Set Point Adjustment: Screw type on top of housing.
Weight: 2 lb, 15.7 oz (1.35 kg).
Agency Approvals: CE, UL, CSA, FM, ATEX, IECEx.

UL, CSA, FM Model	ATEX Model	Range, Inches W.C.	Approximate Dead Band at Min. Set Point	Approximate Dead Band at Max. Set Point
1950G-00-B-24-NA	**1950G-00-B-24**	.07 to .15	.04	.06
1950G-0-B-24-NA	**1950G-0-B-24**	.15 to .50	.06	.11
1950G-1-B-24-NA	**1950G-1-B-24**	.4 to 1.6	.11	.29
1950G-5-B-24-NA	**1950G-5-B-24**	1.4 to 5.5	.4	.9
1950G-10-B-24-NA	**1950G-10-B-24**	3 to 11	.9	1.8
1950G-20-B-24-NA	**1950G-20-B-24**	4 to 20	1.2	3.0

Series 1950G-XX-B-24-NA **$198.00**
Series 1950G-XX-B-24, ATEX **279.50**
Series 1950G-XX-B-240-NA, 240 VAC **231.00**
Series 1950G-XX-B-120-NA, 120 VAC **198.00**

WATCHDOG® OILERS

The Watchdog® closed system oiler is designed for bearing housings, gear boxes, and other oil sump applications. It is ideal for use in the chemical processing, power generation, pulp and paper, and utility industries. The viewport provides visual indication of lubricant level and condition. Mounted on the centerline of the desired oil level, these constant level oilers do not require any adjustment or level setting.

FEATURES

- Closed system design prevents contamination and spillage
- No vent line to pump bearing housing required, simplifying installation
- 2 oz. or 4 oz. reservoirs provide oil make-up
- Mounts on centerline of desired oil level, and does not require adjustment or level setting
- Integral viewport eliminates need for additional component

SPECIFICATIONS

	Aluminum Body	Thermoplastic Body	Stainless Steel Body
Body	Cast Aluminum	Polysulfone	Stainless Steel
Reservoir	Glass	Polysulfone	Glass
Viewport	Glass	Polysulfone	Glass
Max. Operating Temp.	325°F/160°C	325°F/160°C	325°F/160°C
O-Ring	Viton®	Viton®	Viton®

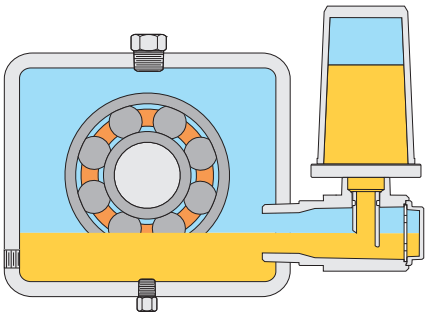

Watchdog Oiler mounted on centerline of desired oil level

SELECTION CHART

Model No.	Style	Capacity	Connection	Wire Guard	Dimensions (in.)		
					A	B	C
31804	Thermoplastic Body, Reservoir and Viewport	4 oz.	1 NPT	No	5-3/4	3-9/32	1
31818	Aluminum Body, Glass Reservoir and Viewport	4 oz.	1/2 NPT	No	6-1/4	4-1/8	1/2
31820		4 oz.	3/4 NPT	No	6-1/4	3-1/4	3/4
31821		4 oz.	1 NPT	No	6-1/4	3-1/4	1
31822		4 oz.	3/4 BSPT	No	6-1/4	4-1/8	3/4
31823		4 oz.	1 BSPT	No	6-1/4	3-1/4	1
31824		4 oz.	3/4 NPT	Yes	6-1/2	3-3/8	3/4
31825		4 oz.	1 NPT	Yes	6-1/2	3-3/8	1
31826		4 oz.	3/4 BSPT	Yes	6-1/2	4-1/8	3/4
31827		4 oz.	1 BSPT	Yes	6-1/2	3-3/8	1
31828		4 oz.	1/2 NPT	Yes	6-1/2	4-1/8	1/2
31829	Stainless Steel Body, Glass Reservoir and Viewport	4 oz.	1 NPT	No	6-1/4	3-1/4	1

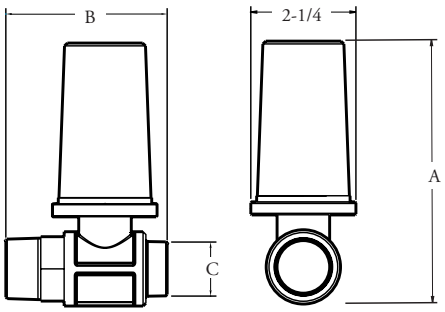

1. PROJECT NAME : PROPAK- CENOVUS ENERGY

2. CUSTOMER : Spartan Controls

3. WORK DESCRIPTION : THREE PHASE INDUCTION MOTOR

Ref. No of HE	Specifications	Quantity	Driven machine
20193136RMH840	2000HP 2P 4000V 60Hz	1	Compressor

HYUNDAI ELECTRIC & ENERGY SYSTEM CO., LTD.
ROTATING MACHINERY DESIGN DEPARTMENT

0	2019.11.13	J.H.SEO	--	Y.S.KIM	Y.W.JUNG	FOR APPROVAL
REV.	DATE	PREPARED BY	CHECKED BY	REVIEWED BY	APPROVED BY	DESCRIPTION

HE	I. INSPECTION & TEST PLAN	
WORK DESCRIPTION THREE PHASE INDUCTION MOTOR		PJT. No.: 20193136
I.T.P No. : ITP - 19RMH840	REV. No. : 0	PAGE : 2 OF 9

No.	Test item	Applied code	Inspected by						Remarks
			SELLER		BUYER		OWNER		
			Type	Routine	Type	Routine	Type	Routine	
1	**Final inspection**								
1.1	Visual & dimensional inspection	Approved spec.	H	--	W	--	W	--	
1.2	Measurement of winding resistance	IEEE 112	H	--	W	--	W	--	
1.3	Locked rotor test	IEEE 112	H	--	W	--	W	--	
1.4	No-load test and direction of rotation check	IEEE 112	H	--	W	--	W	--	
1.5	Measurement of noise level	NEMA MG1	H	--	W	--	W	--	
1.6	Measurement of vibration	NEMA MG1	H	--	W	--	W	--	
1.7	Determination of characteristics	IEEE 112, IEC 60034	H	--	W	--	W	--	
1.8	Temperature rise test	IEEE 112	H	--	W	--	W	--	
1.9	Measurement of insulation resistance	IEEE 43	H	--	W	--	W	--	
1.10	Withstand voltage test	NEMA MG1	H	--	W	--	W	--	
1.11	Other tests(WTD,BTD & Space heater)	M.STD	H	--	W	--	W	--	

Inspection Category : Type : Type test with 1(one) motor per same type & rating

Routine : Routine test with the remained motors which shall not be type-tested

Abbreviation : H : Hold Point (Internal Shop Test and Inspection by HE)

R : Test Report Review

W : Witness Point

Special note :

1. PROJECT NAME : PROPAK-CENOVUS ENERGY

2. CUSTOMER : Spartan Controls

3. WORK DESCRIPTION : THREE PHASE INDUCTION MOTOR

Ref. No of HE	Specifications	Quantity	Driven machine
20193136RMH840	2000HP 2P 4000V 60Hz	1	Compressor

HYUNDAI ELECTRIC & ENERGY SYSTEM CO., LTD.
ROTATING MACHINERY DESIGN DEPARTMENT

1. Final Inspection

1.1 Visual & dimensional inspection

1.1.1 Method of inspection

1) Outline dimensions of main parts and dimensions related to outside connection shall be confirmed to be in conformity to the approved drawings.

2) The following items shall be confirmed to be in conformity to the related specifications and the approved drawings.

- Model, form & type, rating, class of insulation, name plate, painting, accessories, and quantities.

1.1.2 Acceptance criteria

1) In accordance with approved spec. & drawings

1.2 Measurement of winding resistance

1.2.1 Method of test

1) The resistance of the stator winding shall be measured between terminals at an ambient temperature.

2) The measurement shall be carried out with direct current by digital meter.

1.2.2 Acceptance criteria

1) Maximum unbalance of resistance between phase and phase shall not exceed ±1% of mean value.

1.3 Locked rotor test

1.3.1 Method of test

1) With the rotor locked at the appropriate position at an ambient temperature, primary current, supply voltage, and input power shall be measured by applying approximately the rated load current of the rated frequency, 1/2 of the rated frequency and 1/4 of the rated frequency to the stator windings.

2) For squirrel cage motors, locked rotor test shall also be carried out at the rated frequency and approximately 200% of the rated primary current.

1.3.2 Acceptance criteria

1) In accordance with acceptance criteria of determination of characteristics

1.4 No load test and Direction of rotation check

1.4.1 Method of test

1) The no-load test of the motor shall be performed by measuring the primary current, the input power and nominal speed by operating the motor at no-load condition with rated voltage and frequency at an ambient temperature.

2) During operation with no-load, the following items shall be confirmed.

(a) Direction of rotation (b) Direction of cooling air flow

(c) Mechanical losses and iron losses

1.4.2 Acceptance criteria

1) The difference between the no-load current in each line and mean value shall not exceed 5% above or below of the mean value.

2) In accordance with approved spec. & drawings

1.5 Measurement of noise level

1.5.1 Method of test

1) With the motor driven at its rated speed at no-load and giving its rated voltage, noise level of the motor shall be measured with sound level meter.

2) It is desirable to select the place and method such that the sound reflection is small as far as possible.

3) The measurement shall be made at 4 points 1[m] apart from both sides and both shaft ends of motor respectively at the height of shaft center.

4) The noise level of the motor shall be obtained by the mean value of each points.

5) When the difference between synthesized noise and background noise is more than 10 dB, the effect of background noise may be neglected. When the difference is less than 10 dB, the measured noise shall be calculated by correcting in the following table.

(Table 1) Unit: dB

Difference between synthesized noise and background noise	3	4	5	6	7	8	9
Correction value	-3	-2		-1			

1.5.2 Acceptance criteria

1) In accordance with approved spec.

1.6 Measurement of vibration

1.6.1 Method of test

1) The motor shall be run at no load with rated frequency and rated voltage.
2) The levels of vibration severity shall be measured on the bearing housings in the three coordinate directions of horizontal, vertical and axial.
3) The shaft radial vibration measurements shall be taken using vibration sensors when the vibration sensors are supplied.

1.6.2 Acceptance criteria

1) The vibration value shall not exceed the limit specified in the approved spec.

1.7 Determination of characteristics

1.7.1 Method of determination of characteristics

1) Load characteristics shall be determined in accordance with equivalent circuit calculation method on base of the result obtained from no-load, locked rotor test and winding resistance.
2) Below data shall be submitted for each load ; 25%, 50%, 75%, 100% & 125%
   - Primary current
   - Power factor
   - Efficiency
   - Slip
3) Others
   - Locked rotor current
   - Locked rotor torque
   - Breakdown torque

1.7.2 Acceptance criteria

1) Tolerances in (Table 2) are applied to the guaranteed values of characteristics of induction motor.
2) In case where the minimum or maximum value is guaranteed in the specifications, no tolerances shall be applied.

(Table 2)

Item	Kind of quantity	Tolerance	Remark
1	Efficiency η up to and 150kW above 150kW	 - 15% of (1 - η) - 10% of (1 - η)	
2	Power factor, cos φ	- 1/6 × (1 - cos φ)	Min. : 0.02 Max. : 0.07
3	Slip at full load and at working temp.	± 20% of the slip	>= 1 kW
4	Breakdown torque	- 10% of the torque	
5	Locked rotor torque	- 15% of the torque	
6	Locked rotor current	+ 20% of the current	

1.8 Temperature rise test

1.8.1 Method of test

1) Reference ambient temperature

In case temperature of air is taken as the reference ambient, it shall be measured by means of thermometers or RTD, place at different points around and at a distance of one or two meters from the motor and half as high as its height, and protected so as to avoid effect of heat radiation and stray draughts. The mean of the measured values shall be taken.

2) Loading method : Equivalent loading method

The motor to be tested is operated at no-load from a main power source, and auxiliary power of difference frequency is superposed.
Generally, temperature rises are determined by adjusting the voltage and frequency of auxiliary power generator so that the primary current is nearly equal to the rated value.
The rated current means the current which is decided by the above test item, "Determination of characteristics."
When a long time is required to attain steady temperature, reasonable (25% to 50%) overloads during the preliminary heating period are permissible in order to shorten the time of test. Any overload shall be removed before the temperature goes above the expected final temperature.

3) Temperature rise of windings are determined by resistance method as following. They give the mean temperature rises of windings.

$\triangle t = (R2 / R1)(235 + t1) - (235 + t2)$

where : $\triangle t$ = temperature rise of windings
R2 = resistance of windings hot, Ω
R1 = resistance of windings cold, Ω
t1 = temperature of windings at the time when R1 is measured.
t2 = the ambient temperature at the time when R2 is measured.
(in case of TEWAC motor, t2 is the temperature of cooling water at the end of the temperature rise test)
235 = constant for copper

4) Duration time of temperature rise test

The temperature test shall continue until there is 1℃ or less change in temperature rise above the ambient temperature over a 30-minute period.

5) The measurement of temperatures after shutdown by the resistance method requires a quick shutdown of the motor at the end of the temperature test.
If the initial resistance reading is obtained within the time interval indicated in the following (Table 3), this reading is accepted as the temperature measurement and extrapolation to the instant of switching off power is unnecessary.
(Table 3)

Rated output, P_N [kW]	Time interval after switching off powers [s]
50 or LESS	30
Above 50 to 200	90
Above 200 to 5000	120

6) Bearing temperature rise test
Temperature rise of bearing are determined by means of RTD or thermometers as following formula.

$\triangle t1 = T1 - T2$

where T1 = Temperature of bearing at the time
T2 = Ambient Temperature (Anti-friction or self-cooled sleeve bearing)
The oil temperature (Forced feed oil lubrication sleeve bearing)

Bearing temperature rise shall not exceed
a) Anti-friction bearing, Self-cooled sleeve bearing
: Alarm temperature for bearing - Maximum design ambient temperature
b) Forced feed oil lubrication sleeve bearing
: Alarm temperature for bearing - Maximum feed inlet temperature of oil

1.8.2 Acceptance criteria
1) In accordance with approved spec.

< Note >
In case of self-cooled sleeve bearing, the bearing temperature rise on the approved spec is based on the maximum design ambient temperature. In case that the ambient temperature around the tested motor is lower than the maximum design ambient temperature, the acceptable temperature rise shall be adjusted accordingly, because viscosity of the oil in the bearing which is closely related to the bearing temperature rise is changed with an ambient temperature.

1.9 Measurement of insulation resistance

1.9.1 Method of test
1) The measurement shall be carried out before and after high voltage test.
2) Insulation resistance shall be measured between windings and earth with DC 2500(V) megger on high voltage windings and D.C 500(V) megger on low voltage windings.

1.9.2 Acceptance criteria

1) Shall be more than 100MΩ (form wound coils for high voltage windings.)

2) Shall be more than 5MΩ (random wound stator coils and form wound coils for low voltage windings.)

1.10 Withstand voltage test

1.10.1 Method of test

1) The test voltage shall be applied, as specified in (Table 4), between the windings under test and the frame of the machine, with core and any windings or sections of the windings not under test and electrical circuits of auxiliary components connected to the frame.

2) The test voltage shall be of power frequency and as near as possible to a sine wave form. However, for machines with a rated voltage 6kV or greater, when power frequency equipment is not available, then by agreement a d.c. test may be carried out at a voltage 1.7 times the r.m.s value given in Table 4.

3) The test shall be started at a voltage not exceeding half of the full test voltage, and then the voltage shall be increased to the full value, steadily or in steps of not more than 5% of the full value, the time allowed for the voltage increase from half to full value being not less than 10 s. The full test voltage shall be maintained for 1 minute.

(Table 4)

Item	Parts to be tested	Test voltage (r.m.s.)
1	Primary windings	1000V plus twice the rated voltage
2	Auxiliary components	In accordance with items 1 above as appropriate for their supply voltage

1.10.2 Acceptance criteria

1) All windings shall withstand without any injury.

1.11 Other tests (WTD, BTD & Space heater)

1.11.1 Method of test

1) Measurement of resistance for Space heater

2) Measurement of insulation resistance for WTD, BTD & Space heater

3) High potential test for Space heater

1.11.2 Acceptance criteria

1) Resistance : In accordance with approved spec.

2) Insulation resistance : More than 10 MΩ

3) Shall withstand without a damage

HYUNDAI ELECTRIC

HEAD OFFICE
12nd FLOOR, 75, YULGOK-RO, JONGNO-GU,
SEOUL, KOREA
TEL: (02)746-7650 ~ 2

ULSAN OFFICE
700, BANGEOJINSUNHWAN-DORO,
DONG-GU, ULSAN, KOREA
TEL: (052)202-6771 FAX: (052)202-6780

INSPECTION & TEST REPORT

PJT Name	PROPAK - CENOVUS ENERGY		
Project No.	20193136RMH840	Serial No.	20193136RMH840001
Type	HNP3 451-28E	Quantity	1 Unit
Specification	3Phase, 2000 [HP], 60 [Hz], 2P, 4000 [V]		
ITEM NO.: FCI-WS2-KM-9700			

TEST ITEMS

Final inspection

1. Visual & dimensional inspection
2. Measurement of winding resistance
3. Locked rotor test
4. No-load test and Direction of rotation check
5. Measurement of noise level
6. Measurement of vibration
7. Determination of characteristics
8. Temperature rise test
9. Measurement of insulation resistance
10. Withstand voltage test
11. Other tests (WTD, BTD & Space heater)

TEST RESULT: Accept

Approved By: T.W.Lee

Checked By: HYUNDAI T-104 2020.5.12 정규원 ELECTRIC-QA

Tested By: HYUNDAI T-158 2020.5.12 ELECTRIC-QA

Reviewed and Witnessed By:

HYUNDAI ELECTRIC

Test Report of 3 Phase Induction Machine

PJT Name	PROPAK - CENOVUS ENERGY	Project no.	20193136RMH840
model no.	HNP3 451-28E	Serial no.	20193136RMH840001
item no.	FCI-WS2-KM-9700	shaft no.	9RMH840

general rating

Output HP	2000	poles	2	voltage [V]	4000
Frequency [Hz]	60.0	speed [rpm]	3554.0	current [A]	251.3
Service factor	1.15	insulation	F	max. amb. [℃]	40
time rating	S1	enclose	WP II - IP24W	weight [Kg]	5300
DE. bearing:	SLEEVE	NDE. bearing:	SLEEVE	efficiency [pu]	0.9520

winding resistance in [Ω] at ambient temperature 19.2 [℃]

phase	Ru-v:	Rv-w:	Rw-u:	averaged:	max. deviation [%]
stator	0.09995	0.09990	0.09997	0.09994	0.04
rotor	***	***	***	***	***

no load and short circuit(locked rotor) **current unbalance**

item	[V]	[A]	[kW]	[Hz]	Iu [A]	Iv [A]	Iw [A]	deviation [%]
no load	4000.0	40.78	25.19	60.00	40.73	40.9	40.72	0.29
locked rotor	933.3	253.79	75.99	60.00	***	***	***	***
rotor voltage	***	[V]	Direction of Rotation		C.W with U.V.W Connection			(Viewed from D.E)

vibration measurement

position	horizontal	vertical	axial	remark
DE	1.5	2.0	0.9	meas. Unit
NDE	0.9	1.5	1.2	mm/s(rms)

temperature rise in [K]

stator (R/E)	39.8 / 46.8	[V]	4000
rotor (R)	***	[Hz]	60
de. bearing	32.7	[A]	244.2
nde bearing	31.3	[kW]	***
slip ring	***	[Nm]	***
***	***	[rpm]	***

noise level in dB(A) at 1 [m] distance from major frame

averaged sound level (@)	remark
79.6	Background noise : 73

@ averaged value from 4 measured result (measured at front, rear, right, left side of machine)
This noise value is corrected by background noise

insulation resistance in [MΩ]

item	before test	after test	test voltage [V]
stator	29850	30600	2500
Rotor	***	***	***
E.T.D.	1000	1000	500
heater	1000	1000	500

high voltage test

item	test voltage [V]		duration [s]
stator	AC	9000	60
Rotor	***	***	***
E.T.D.	AC	***	***
heater	AC	1500	60

over load and over speed

item	test value	duration [s]	Remark
over load	*** [%] of rated load(current)	***	***
over speed	*** [%] of rated speed	***	***

accessories and other data

space heater	1	phase	200	[W]	120	[V]	71.7 [Ω]
name of item	accessory type	Q'ty	check result	Remark			
winding temperature	PT100	6	Good	***			
bearing temperature	PT100(Dual)	2	Good	***			
air temperature	***	***	***	***			
additional	***	***	***	***			

* Measurement of shaft vibration(㎛p-p) : DE~ X:28 Y:34, NDE~ X:8 Y:5

Tested By

HYUNDAI T-158 2020 5 12 ELECTRIC-CO.

We hereby confirm that the specified test were carried out in accordance with applicable standard(s) and that the satisfactory test result were obtained.

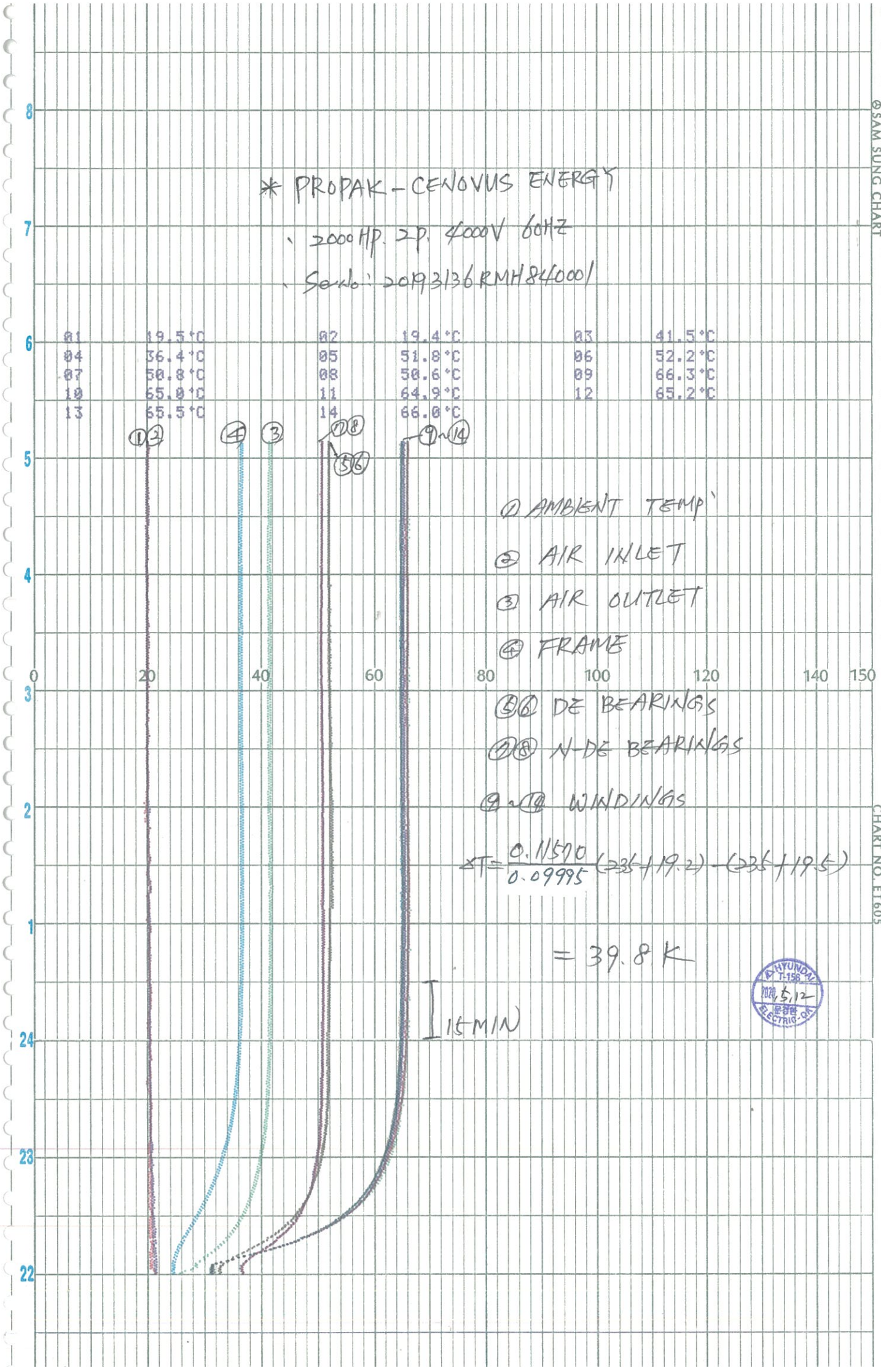
* PROPAK - CENOVUS ENERGY
· 2000 HP. 2P. 4000V 60HZ
· Serial: 2019 3136 RMH84000/
01 19.5°C
02 19.4°C
03 41.5°C
04 36.4°C
05 51.8°C
06 52.2°C
07 50.8°C
08 50.6°C
09 66.3°C
10 65.0°C
11 64.9°C
12 65.2°C
13 65.5°C
14 66.0°C
① AMBIENT TEMP
② AIR INLET
③ AIR OUTLET
④ FRAME
⑤⑥ DE BEARINGS
⑦⑧ N-DE BEARINGS
⑨~⑭ WINDINGS
ΔT = 0.11570 / 0.09995 (236+19.2) − (236+19.5)
= 39.8 K
15 MIN
0
20
40
60
80
100
120
140
150
22
23
24
1
2
3
4
5
6
7
8
SAM SUNG CHART
CHART NO. ET605

HYUNDAI ELECTRIC

Determination of characteristics of 3 phase induction machine

PJT Name	PROPAK - CENOVUS ENERGY	Project no.	20193136RMH840
model no.	HNP3 451-28E	Serial no.	20193136RMH840001

basic rating

Output HP	2000	poles	2	voltage [V]	4000
Frequency [Hz]	60.0	speed [rpm]	3554.0	current [A]	251.3
Service factor	1.15	insulation	F	max. amb. [℃]	40

winding resistance in [Ω]

measured value at	19.2	[℃]	u-v:	0.09995	v-w:	0.09990	w-u: 0.09997
averaged phase resistance (refer to Y connection) [Ω]			0.064871		at specified temperature	95.00	[℃]

no load and short circuit(locked rotor) + actual load point for correction

item	[V]	[A]	[kW]	[Hz]	[℃]	line-line [Ω]	[rpm]
no load	4000.0	40.78	25.190	60.00	25.10	***	***
locked rotor	263.21	251.73	37.610	15.00	19.40	***	***
	491.75	251.38	48.960	30.00	19.80	***	***
	933.30	253.79	75.990	60.00	20.40	***	***
	1735.90	503.20	280.000	60.00	21.20	***	***
	***	***	***	***	***	***	***
actual load	***	***	***	***	***	***	***

summary of constants

temperature constant	stator: 235.0		Rotor: 235.0	
constant loss	Wh = 6.526	[kW]	Wf = 18.409	[kW]
stray load loss	Wll = 7.836 [kW]		at primary current I1 = 251.30	[A]
reactance ratio	X1/X2 = 0.6700			

f2	[Hz]	1.200	15.00	30.00	60.00	60.00	***
stator current	[A]	***	251.73	251.38	253.79	503.20	***
V1	[V]	2309.4	2309.4	2309.4	2309.4	2309.4	***
r1	[ohms]	0.064871	0.064871	0.064871	0.064871	0.064871	***
r2	[ohms]	0.118185	0.201317	0.282388	0.462659	0.426682	***
rfe	[ohms]	2370.55	2372.33	2375.22	2379.16	2383.68	***
X1	[ohms]	9.4983E-01	9.2873E-01	8.9471E-01	8.4830E-01	7.9513E-01	***
X2	[ohms]	1.4177E+00	1.3862E+00	1.3354E+00	1.2661E+00	1.1868E+00	***
bm	[mhos]	1.7884E-02	1.7878E-02	1.7867E-02	1.7852E-02	1.7835E-02	***
gfe	[mhos]	4.2184E-04	4.2153E-04	4.2101E-04	4.2032E-04	4.1952E-04	***
corrected constant from actual load point reading				Xm = ***		r2 = ***	

summary of load characteristics

load	[pu]	0.25	0.50	0.75	1.00	1.25	2.26
current	[A]	72.6	124.8	182.4	244.2	311.2	795.0
efficiency	[pu]	0.9307	0.9559	0.9606	0.9595	0.9553	0.8810
power factor	[pu]	0.7963	0.9025	0.9217	0.9193	0.9055	0.6956
slip	[pu]	0.00303	0.00601	0.00918	0.01265	0.01659	0.06260
torque	[kg.m]	101.3	203.1	305.7	409	513.3	974.6

locked rotor and break down characteristics

locked rotor current [A]	1264	break down torque [pu]	2.383
locked rotor torque [pu]	0.899	***	***

HYUNDAI T-158 2020. 5. 12 품질보증 ELECTRIC.CO.

HYUNDAI ELECTRIC

Segregation of no load loss

PJT Name	PROPAK - CENOVUS ENERGY	Project no.	20193136RMH840
model no.	HNP3 451-28E	Serial no.	20193136RMH840001

basic rating

Output HP	2000	poles	2	voltage [V]	4000
Frequency [Hz]	60.0	speed [rpm]	3554.0	current [A]	251.3
Service factor	1.15	insulation	F	max. amb. [℃]	40

winding resistance in [Ω]

measured value at	19.20 [℃]	u-v:	0.09995	v-w: 0.09990	w-u: 0.09997
averaged phase resistance (refer to Y connection)		0.049970	[Ω]		

no load reading

[V]	[A]	[kW]	[Hz]	[rpm]	[℃]	line-line [Ω]
4399.80	51.52	27.880	60.00	***	25.10	***
4000.00	40.78	25.190	60.00	***	25.10	***
3680.40	34.82	23.830	60.00	***	25.10	***
3359.50	30.29	22.760	60.00	***	25.10	***
3053.70	26.66	22.050	60.00	***	25.10	***
2719.40	23.88	21.370	60.00	***	25.10	***
2400.20	21.10	20.650	60.00	***	25.10	***
2079.80	18.46	20.110	60.00	***	25.10	***
1760.20	16.16	19.630	60.00	***	25.10	***
***	***	***	***	***	***	***

calculation and measured result

no load core loss	[kW]	6.526
friction and windage loss	[kW]	18.409
no load current	[A]	40.80

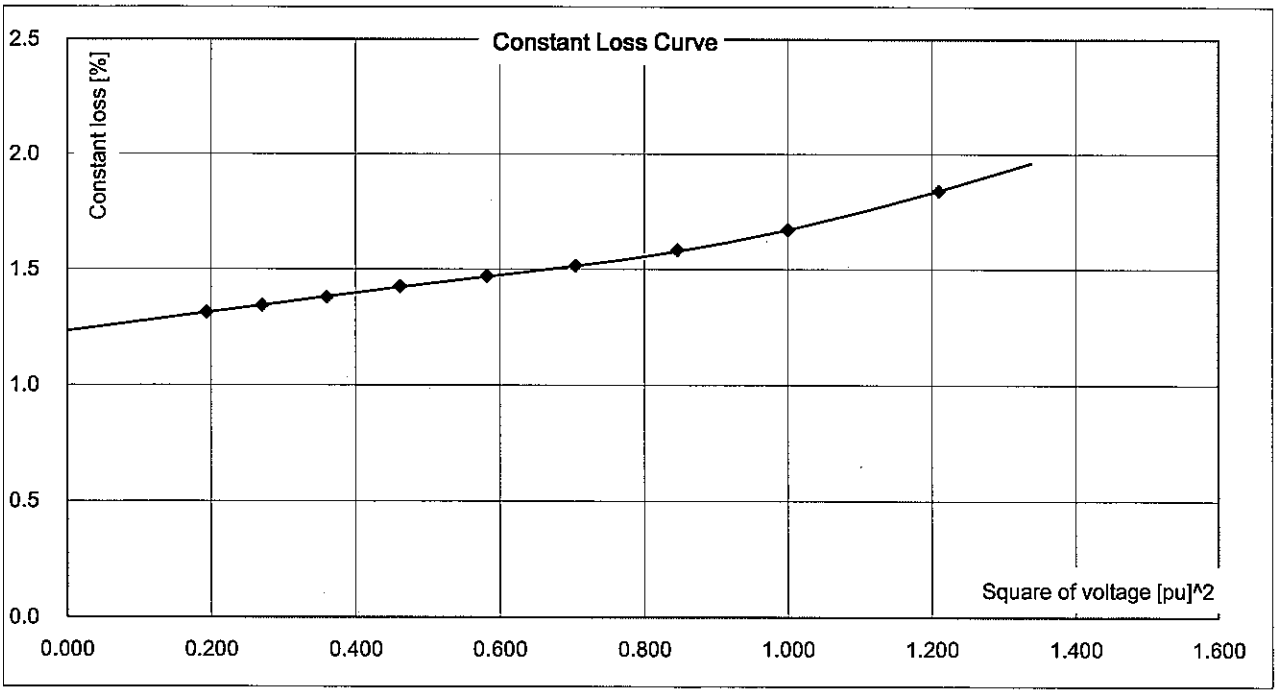

HYUNDAI T-158 2020. 5. 12 ELECTRIC-QA

	INSPECTION REPORT 검사 성적서			CHECKED BY : 검 토 자	
PROJ. NO. 수주번호	20193136RMH840	SPEC 용량,형식	2000HP,2P,4000V	INSP. DATE 검 사 일	
PROJ.NAME 수 주 명	PROPAK-CENOVUS ENERGY	DWG. NO. 도면번호	HM-099283/R.3	INSPECTOR 검 사 자	
		Q'TY 수 량	1SET	SERIAL NO. 일련번호	20193136RMH840001

FINAL CHECK SHEET(D)

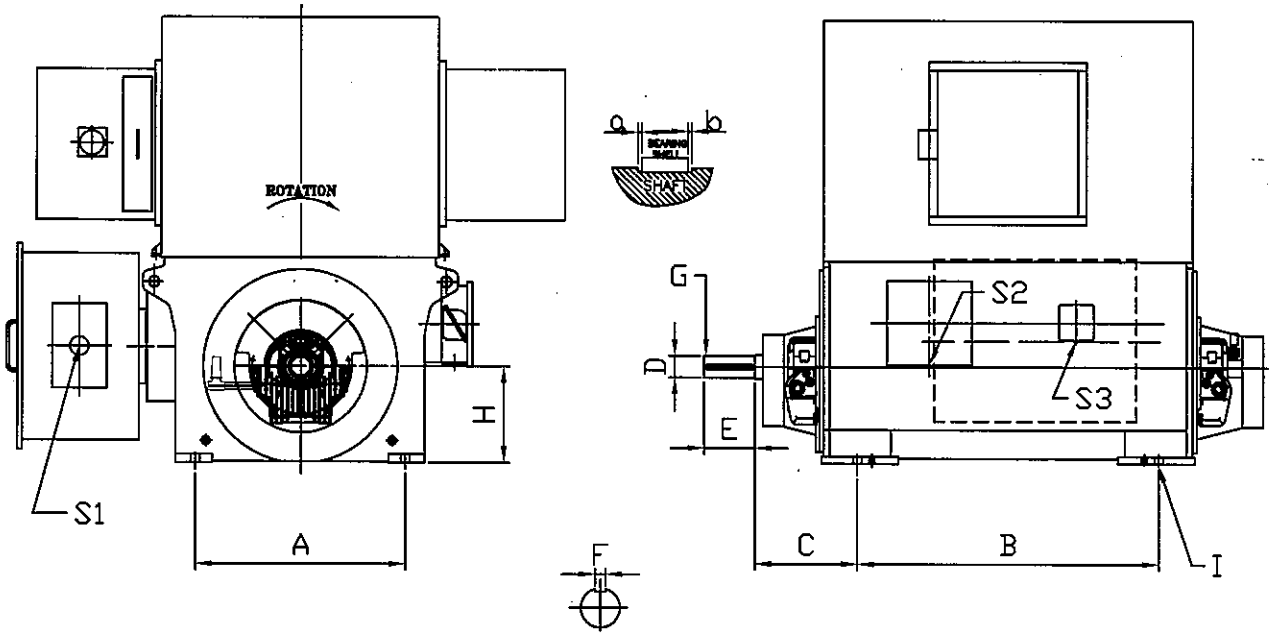

CHECK POINT G, SHAFT RUN-OUT CHECK

CHECK DEVICE : V-CALIPERS, MICROMETER, DEPTH GAUGE

PART \ MK	A	B	C	D	E	F	G	H	I	
SPEC	±2.0 850	±2.5 1400	±3.0 530	+0.028 +0.013 ø100	±0.5 210	-0.022 -0.074 28	max. 0.070	0 -1.0 450	4-35X45	
CHECK	+0.1	+0.1	-0.5	+0.028	±0	-0.060	0.02	-0.6	4-35X45	

PART \ MK	S1	S2	S3	a	b					
SPEC	1-NPT3"	2-NPT3/4"	1-NPT3/4"	±2.0 6.5	±2.0 6.5					
CHECK	1-NPT3"	2-NPT3/4"	1-NPT3/4"	+0.1	-0.1					

NOTE(특기)

VISUAL INSPECTION : AC

AC : ACCEPT (양호)	RJ : REJECT (불량)	NA : NOT APPLICATION (해당없음)	FINAL INSPECTION 최 종 판 정	합 격 ACCEPT

A4(210mm x 297mm)

INSPECTION REPORT
검사 성적서

CHECKED BY :
검토자 :

PROJ.NO 수주번호	20193136RMH840	SPEC 용량,형식	2000HP 2P 4000V	INSP.DATE 검사일	
PROJ.NAME	PROPAK-CENOVUS ENERGY	DWG.NO 도면번호	P-20193136 Rev. 0	INSPECTOR 검사자	
		Q'TY 수량	1 SET	SERIAL.NO 일련번호	20193136RMH84000 1

FINAL PAINT CHECK SHEET

****

(UNIT : ㎛)

PART 구분	INSPECTION ITEM 검 사 항 목	SPEC 기 준 값	CHECK (검사) NO. 1	NO.	NO.	REMARK
Prime Coat.	PAINT MT'L(재질)	EP 1160(H)	EP 1160(H)	*	*	
	COLOR(색상)	Gray	Gray	*	*	
	THICKNESS(두께)	60㎛	65㎛	*㎛	*㎛	
	T,Hu,D/P,:5~40℃ , 85%이하↓		TEMP 12 ℃ HUMIDITY 53 % DEW POINT 2.7			
Intermediate Coat.	PAINT MT'L(재질)	*	*	*	*	
	COLOR(색상)	*	*	*	*	
	THICKNESS(두께)	*	*	*	*	
	T,Hu,D/P,:5~40℃ , 85%이하↓		TEMP ℃ HUMIDITY % DEW POINT			
Finish Coat.	PAINT MT'L(재질)	UT6780(S)	UT6780(S)	*	*	
	COLOR(색상)	7.5 BG 6/1	7.5 BG 6/1	*	*	
	THICKNESS(두께)	40㎛	105-160㎛	*㎛	*㎛	
	T,Hu,D/P,:5~40℃ , 85%이하↓		TEMP 21 ℃ HUMIDITY 69 % DEW POINT 15.1			
Total Dry film thickness		MIN 100 ㎛	105-160㎛	*㎛	*㎛	

* VISUAL (외관): ACCEPT

* NOTE (노트):

AC : ACCEPT 양 호 RJ : REJECT 불 량 NA : NOT APPLICABLE 해 당 없 음

FINAL DECISION 최 종 판 정 합 격 ACCEPT

A4 (210mm × 297mm)

Measuring Equipment List of Motor Test

HE.QM

NO.	Name	Serial NO.	Calibration Date	Recalibration Date	Remarks
1	Mega ohm meter (5000V)	101154582	2019-09-27	2020-09-27	MEGGER
2	Temperature recorder	S5GB11005	2019-09-06	2020-09-06	YOKOGAWA
3	Nano volt micro ohm meter	MY42002113	2019-11-20	2020-11-20	AGILENT
4	Sound level meter	00821018	2019-06-12	2020-06-12	RION
5	Vibration meter	08970254	2019-12-06	2020-12-06	RION
6	Precision power Analyzer	91M812517	2019-10-15	2020-10-15	YOKOGAWA
7	High voltage tester	9663	2019-06-28	2020-06-28	Dong Myung Electric
8	Digital multi-meter	24070049	2019-09-06	2020-09-06	FLUKE
9	AC-Voltage Meter	76AE0582	2019-11-06	2020-11-06	YOKOGAWA
10	AC-Ampere Meter	37122M	2019-12-04	2020-12-04	YOKOGAWA
11	Tacho meter(RPM)	N560314	2019-08-29	2020-08-29	LUTRON
12	Insulation tester(500V)	84NA1015	2019-11-06	2020-11-06	YOKOGAWA
13	Axis Vibration Meter	yd820743	2019-06-12	2020-12-12	BENTLY NEVADA

Measuring Equipment List of Motor Test

NO.	Name	Size	Serial NO.	Calibration Date	Recalibration Date	Remarks
1	깊이게이지(Depth gauge)	0 - 300 mm	620897	2020-03-09	2021-03-09	MITUTOYO
2	버니어캘리퍼스(Vernier Calipers)	0 - 300 mm	17167601	2020-01-16	2021-01-16	MITUTOYO
3	버니어캘리퍼스(Vernier Calipers)	0 - 1 500 mm	517213	2020-03-09	2021-03-09	MITUTOYO
4	높이게이지(Vernier Height gauge)	0 - 1 000 mm	508090	2020-03-10	2021-03-10	MITUTOYO
5	다이얼게이지(Dial gauge)	0 - 10 mm	SXG867	2020-04-04	2021-04-04	MITUTOYO
6	내측 마이크로미터(Caliper Micrometer)	25 - 50 mm	202375	2019-09-03	2020-09-03	MITUTOYO
7	외측 마이크로미터(Outside Micrometer)	100 - 125 mm	544757	2020-03-10	2021-03-10	MITUTOYO
8	Digital Coating Thickness Tester	-	645072	2020-03-10	2021-03-10	MITUTOYO
9	줄자(Tape Measure)	5.0M	KMC-21	2019-06-13	2021-06-13	KOMELON
10			Blank			
11			Blank			
12			Blank			
13			Blank			
14			Blank			
15			Blank			

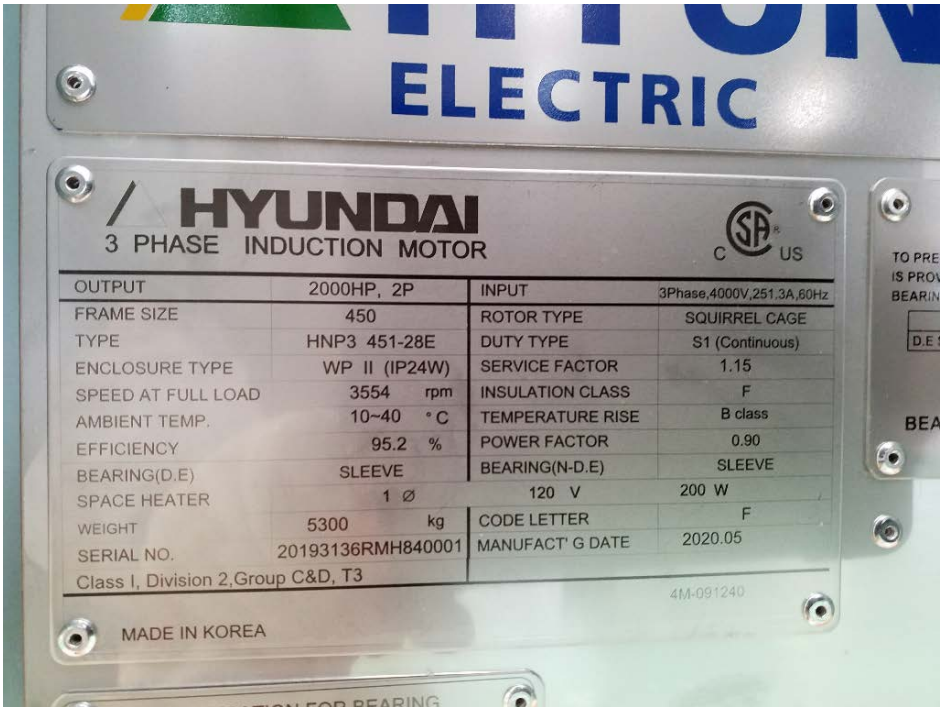

HQ & Sales Office
Bundang First Tower 5th Floor
55, Bundang-ro, Bundang-gu,
Seongnam-si, Gyeonggi-do,
13591, **Korea**

Calgary,Canada Office
64 Foster Road S.E.
Calgary, Alberta
Canada, T2H 0W1
Phone: 403-695-0907
Email:
elecmtrs@hotmail.com

Main Factory
1000, Bangeojinsunhwan-doro, Dong-gu,Ulsan,
682-792, **Korea**

Hyundai Heavy Industries Group
HYUNDAI ELECTRIC

Essential for Today
Potential for Tomorrow

HQ & Sales Office
Bundang First Tower 5th Floor
55, Bundang-ro, Bundang-gu,
Seongnam-si, Gyeonggi-do,
13591, **Korea**

Calgary,Canada Office
64 Foster Road S.E.
Calgary, Alberta
Canada, T2H 0W1
Phone: 403-695-0907
Email:
elecmtrs@hotmail.com

Main Factory
1000, Bangeojinsunhwan-doro, Dong-gu,Ulsan,
682-792, **Korea**

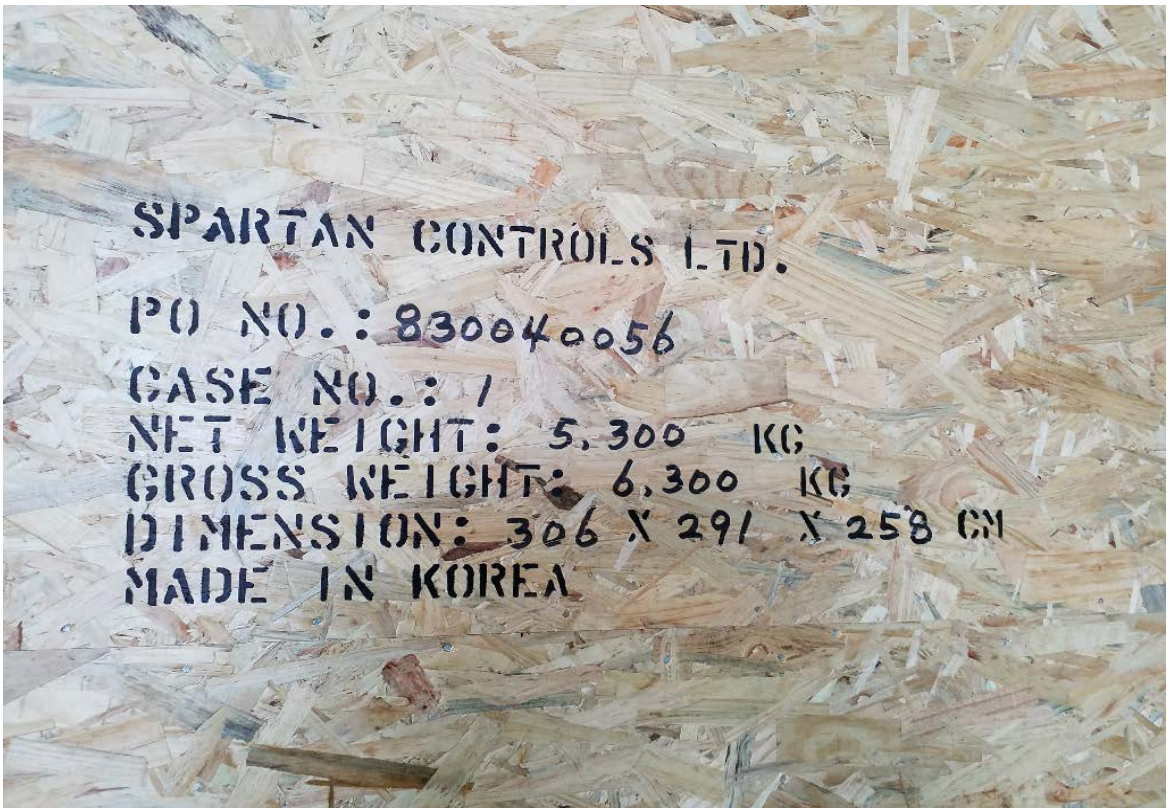

HQ & Sales Office
Bundang First Tower 5th Floor
55, Bundang-ro, Bundang-gu,
Seongnam-si, Gyeonggi-do,
13591, **Korea**

Calgary,Canada Office
64 Foster Road S.E.
Calgary, Alberta
Canada, T2H 0W1
Phone: 403-695-0907
Email:
elecmtrs@hotmail.com

Main Factory
1000, Bangeojinsunhwan-doro, Dong-gu,Ulsan,
682-792, **Korea**

HQ & Sales Office
Bundang First Tower 5th Floor
55, Bundang-ro, Bundang-gu,
Seongnam-si, Gyeonggi-do,
13591, **Korea**

Calgary,Canada Office
64 Foster Road S.E.
Calgary, Alberta
Canada, T2H 0W1
Phone: 403-695-0907
Email:
elecmtrs@hotmail.com

Main Factory
1000, Bangeojinsunhwan-doro, Dong-gu,Ulsan,
682-792, **Korea**

LONG TERM STORAGE MANUAL

FOR

INDUCTION MOTORS / GENERATORS

(Document No. : HHI-manual-S001)

HYUNDAI HEAVY INDUSTRIES CO., LTD.

Storage Preparation and Maintenance during and after Relatively Long Storage Periods

As would be performed for extended shutdown and prior to startup.

Induction Motors / Generators

Maintenance

If a machine will be out of service for more than three months, the unit should be packaged according to TABLE 1 and then maintained per TABLE 2. The intervals depend on the operating and site conditions. The following work is recommended under normal conditions.

Long Term Package conditions. Table 1

Package condition	Machine with export packing.	Without packing or machine with domestic packing.
	Machine should be stored in the correct mounting position. Machine should be covered with suitable water-proof canvas. Vertical motors should be stored upright (not lying down).	
Storage location	1. Machine with packing should preferably not be stored outdoors. Where possible, machines should be stored indoors in a clean, dry area. 2. If indoor storage is impossible for machine with packing, it is recommended storing it under a weather-proof roof, or alternatively cover it with canvas.	1. Machine should not be stored outdoors. Where possible, machine should be stored indoors in a clean, dry area. 2. If indoor storage is impossible for totally-enclosed, outdoor application machine, it is recommended to cover it with canvas.
Care of packing	1. Assess the storage conditions. (1) Stacking of heavy machines atop one another is not recommended. Machines should be stored in such a way to avoid base and frame distortion. (2) Attention should be paid to the load capacity of the floor. Care should be taken that the floor, on which the machine is stored is not subjected to vibration and is free from moisture.	
	(3) Storing of machines for longer than one year is not recommended. If storage is continued, the procedures described in Table 2 should be done every year, and 1) Seal the silica-gel within packing and replace at regular intervals. 2) Fully seal the packing.	(3) The store room should be well ventilated and selected for protection against moisture and dirt. 2. Cover the air intake and discharge openings of open-enclosure machine by canvas to prevent dust deposits inside the machine. 3. If storage conditions are desired even after completed installation of the machine, the machine should be protected against ingress of foreign material by a temporary covering.

Maintenance During Storage and Prior to Starting. Table 2

	During long storage	Prior to operation
External, unpainted metal surfaces.	Apply the following rust-preventive materials or equal : RUST VETO 244. 342.(E.F.Houghton). P101(Nippon Sekiyu). TECTYL 506(Valvoline Oil).	Remove the rust-preventives with suitable solvents.
Bearings.	Rotate the shaft slowly at least 10 revolutions by hand when possible, or for several minutes by temporarily operating the machine once a month when the machine is installed and is ready for operation according to instructions below for a bearing. Exception : Not required in machine with export packing.	1. Check to see that shaft locking-provisions and temporary-covers have been removed, when provided. 2. Check for irregular noise by shaft rotation by hand. 3. If possible, check that bearings are free from rust.
Regreasable anti-friction bearings.	When a machine is out of service for more than one month after installation, supply the following amount of grease to the bearing once a year while rotating the shaft by hand once a month. Regreasing amount is indicated on the rating plate. Supply the grease once a year. Prior to grease supply, Open the grease outlet. Remove the original grease to avoid excessive grease filling into the bearing cavity and to avoid grease leaks from shaft seals.	1. Remove the old grease from the grease outlet opening before beginning operation. 2. Supply new lubricant of the amount indicated on rating plate while rotating the shaft by hand or while the machine is running. 3. Remove old grease by running the machine for a few hours with the grease outlet open.

Oil lubricated bearings	1. When a machine is out of service for more than one month after installation, fill the reservoir with lubricant up to the proper line on the oil level gauge, and the following should be performed monthly : (1) Lubricate a machine with combined angular-contact ball (72 or 73 series) bearings by operating it for about 10 minutes. Lubricate the bearing of a large output machine (provided with oil inlet plug on the top of oil reservoir) by pouring oil through the oil inlet. Then immediately rotate its shaft at least 10 revolutions by hand. After that, drain off excess oil. (2) For a machine with a spherical-roller thrust (293 or 294 series) bearings, run the machine for about 10 minutes or rotate the shaft at least 10 revolutions by hand. (3) In a machine with sleeve bearings, the machine should be run for about 10 minutes or the shaft rotated at least 10 revolutions by hand. When rotating the shaft, supply about 50 to 100cm3 of the lubricating oil through the screw plug (or sight-glass) of the bearing housing. 2. Replace with new oil once every year.	1. Open the drain plug and remove the original oil. The bearing inside shall be cleaned. Fill the reservoir with the new lubricant up to the proper line on the oil level gauge. 2. In a forced-feed, oil-lubricated bearing. (1) Clean the inside of the oil pipes and refresh them, when required. (2) Fill the bearings connected to a forced feed oil system with specified oil, check the system for satisfactory operation.
Insulated windings	Insulation resistance between winding and earth should be measured every six months (Every year in a machine with export packing), and before the machine is started. If low insulation resistance value is measured, open the terminal-box cover and, if the value does not increase, winding should be dried before being energized.	

Table 2 (Continued)

Anti-condensation heater, when provided.	Heater should be energized, in machine without packing, when power-supply cables and heater leads are connected. To prevent moisture accumulation, some form of heating must be utilized to prevent condensation. The heater should maintain the winding temperature at a minimum of 5℃ above ambient.	Heater should be disconnected before starting the machine.
Water drain plug, when provided.	Drain water by opening the drain plug in the enclosure.	
	At regular intervals of not longer than six months. One year in a machine with export packing.	-
Slip rings	Check the surface for signs of corrosion every six months and prior to operation (one year in a machine with export packing.)	
Openings	Any unused cable entry into terminal box(s) should be closed.	Remove the temporary protection covers, when provided
Painted external surfaces	Repaint at regular intervals, when necessary.	

Inspection items prior to operation, in addition to items described above :

Enclosure :

(1) Check that cooling air can flow unobstructed to and from the machine.

(2) Check the enclosure and external rotating parts for damage or corrosion.

(3) Check to insure that rotating parts do not contact with stationary parts.

(4) Inspect the shaft sealing for correct mounting.

(5) Check that screws and base or flange-bolts have been tightened.

(6) To maintain the necessary degree of protection required for enclosures of machines used for outdoor applications, refit gaskets, when provided. Carefully coat all surfaces to be sealed with a sealing agent when reassembling.

Terminal box, terminals :

(1) Check cable terminals are correctly connected electrically.

(2) Check all electrical terminals to assure tightness.

(3) With flexible leads : Check the cable connections are properly insulated, all bare, live metal should be wrapped with insulation tape.

(4) Make sure that direction of rotation of the machine is correct.

Storage of Spare Parts

Storage Locations :

All packages should be stored in an area that is well ventilated and selected for protection against moisture and dirt. Store spare anti-friction bearings in a place not subject to vibration.

Packing Conditions :

(1) Anti-friction bearings : Store spare bearings with packing which protects for long storage-periods.

(2) Sleeve bearings : Apply RUST VETO HEAVY (E.F.Houghton), TECTYL 506 (Valvoline Oil), or equal to finished surfaces, P103 (Nippon Sekiyu) or equal on the lining. Re-coat them every year.

(3) Other parts : Assure the packing is fully sealed.

Manual Rotation

If rotating the shaft by hand is difficult, a jig for starting as shown below may be required depending on the actual coupling size. Couple the jig with the coupling and push or pull the handle using hydraulic jacking or a chain block. Once the shaft starts rotating, a pipe may be applied to the eye bolt to maintain the rotation.

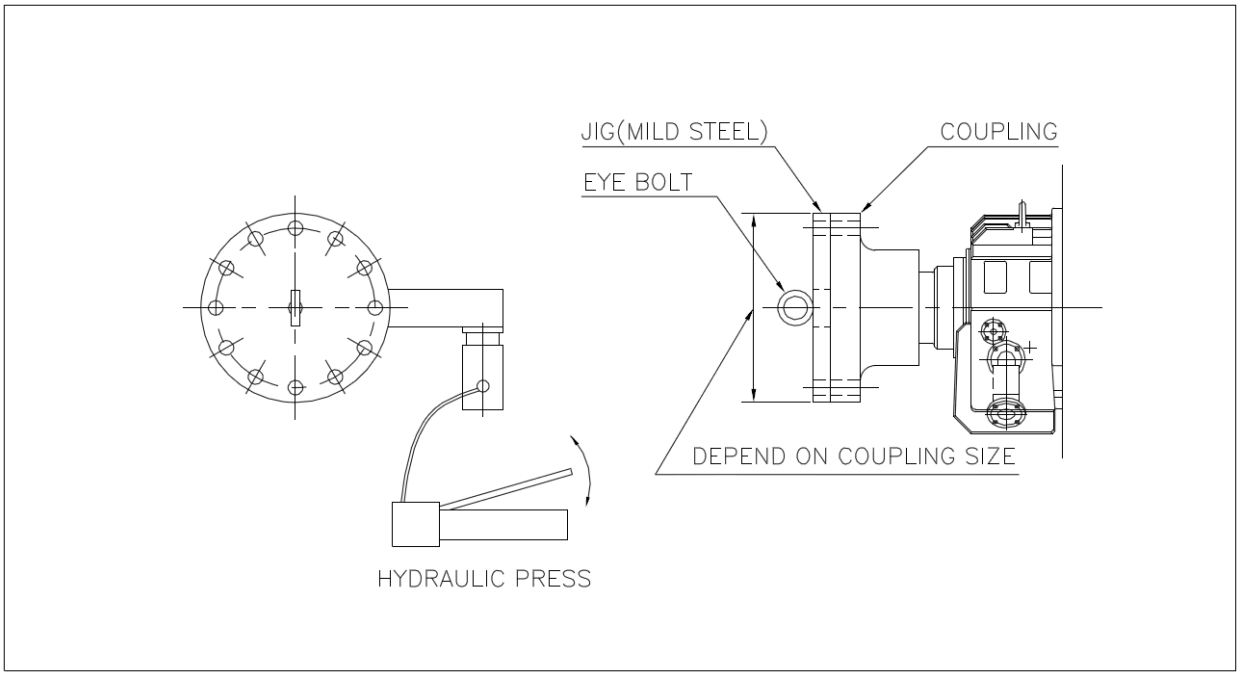

End.