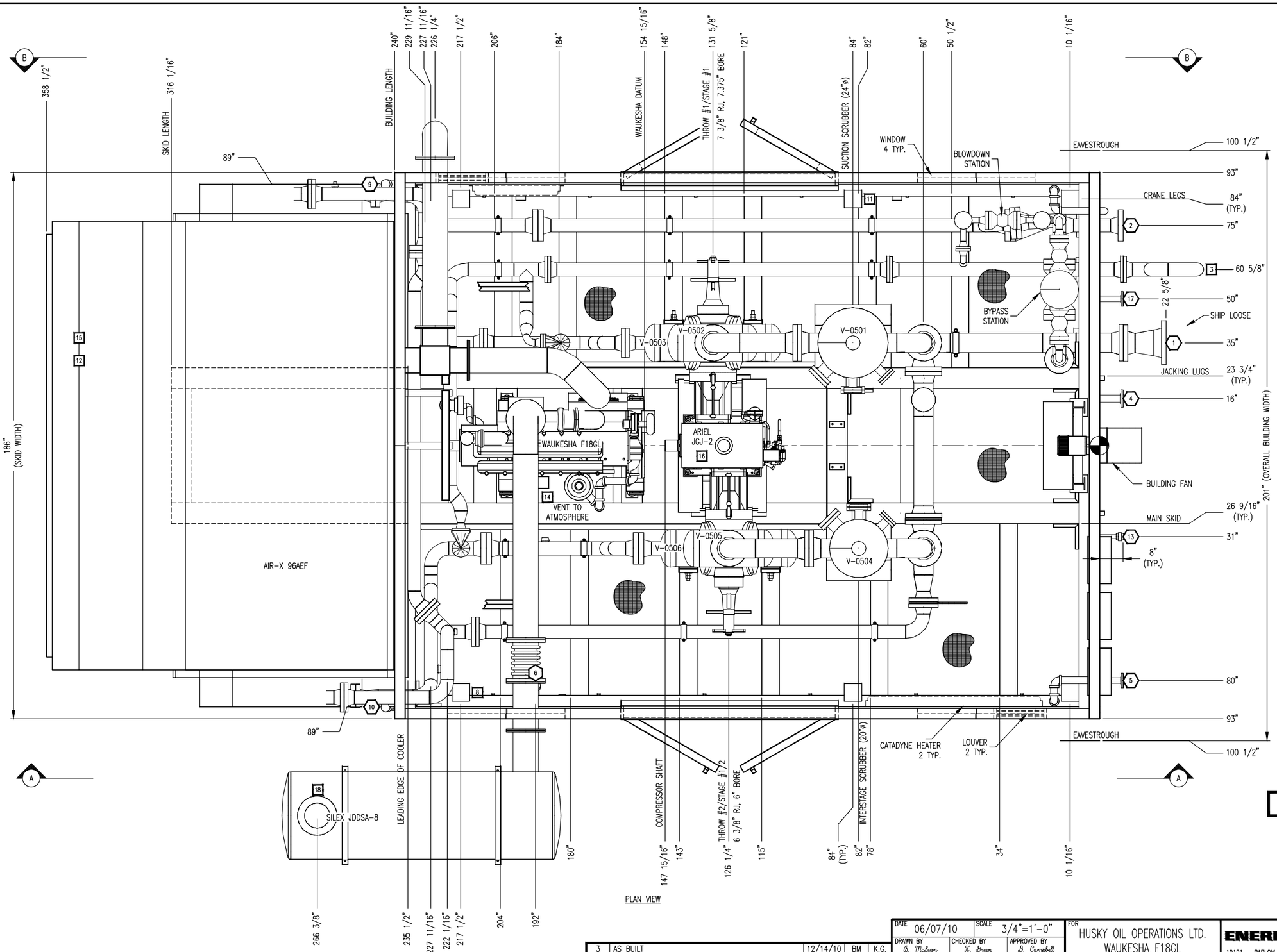

NOZZLE SCHEDULE

MARK	SERVICE	SIZE	RATING	TYPE
1	AIR INLET	8"	300#	RF
2	FINAL DISCHARGE	4"	600#	RF
3	HIGH PRESSURE VENT HEADER (AIR)	4"	150#	RF
4	SCRUBBER DRAIN HEADER	2"	150#	RF
5	FUEL GAS INLET	1 1/2"	150#	RF
6	GLYCOL STAND PIPE	2"	3000#	MNPT
7	RECIP BYPASS OUTLET	4"	600#	RF
8	GLYCOL FILL	1"	3000#	FNPT
9	WASTE OIL DRAIN	2"	3000#	MNPT
10	WASTE GLYCOL DRAIN	2"	3000#	MNPT
11	ENGINE/COMP LUBE OIL FILL	3/4"	–	HOSE
12	STARTER VENT	2"	–	PIPE
13	INSTRUMENT AIR SUPPLY	1"	3000#	FNPT
14	HIGH PRESSURE VENT HEADER (GAS)	2"	–	–
15	LP INSTRUMENT VENT HEADER	1"	–	PIPE
16	COMPRESSOR OIL FILL	2"	–	MNPT
17	START GAS INLET	1 1/2"	150#	RF
18	EXHAUST	8"	12GA	TUBE

GENERAL SPECIFICATIONS

OVERALL PACKAGE LENGTH			31'-9 1/8"
OVERALL PACKAGE WIDTH			16'-9"
OVERALL PACKAGE HEIGHT (w/STACK)			24'-9"
OVERALL OPERATING PACKAGE WEIGHT (LBS)			75500
MAIN SKID SHIPPING WEIGHT (LBS)			74300
BRIDGE CRANE RATING			3 TON
SEAL PAN	■ FLAT	☐ NONE	☐ SLOPED
LOADING METHOD	☐ LIVE ROLL	☐ CRANE	■ JACK & ROLL

NOTES:

1. ALL (Z) DIMENSIONS TAKEN FROM TOP OF SKID.
2. ALL OTHER NOTES FOUND ON DWG. #LEGEND.
3. ALL SKID EDGE CONNECTIONS ±1/4" TOLERANCE.
4. ✪ ALL TAIL DIMENSIONS FROM REFERENCE POINT.
6. SKID DEPTH:
5. CENTER OF GRAVITY:
   'X' FROM REF. POINT: 164.287
   'Y' FROM REF. POINT: 0.839
   'Z' FROM REF. POINT: 30.798

'Z' DIMENSION FROM TOP OF SKID

DESTROY PREVIOUS COPIES

FINAL AS BUILT

NAME B. McLean DATE 12/14/10

REV	DESCRIPTION	DATE	BY	APR
3	AS BUILT	12/14/10	BM	K.G.
2	REMOVE HOT BYPASS SPOOLING – IFC	09/15/10	BM	K.G.
1	ISSUED FOR CONSTRUCTION	08/04/10	TT	K.G.

DATE 06/07/10 SCALE 3/4"=1'-0"

DRAWN BY B. McLean CHECKED BY K. Green APPROVED BY B. Campbell

CUST PO N/A

STEP CODE 198 298 490 511 591

FOR HUSKY OIL OPERATIONS LTD.
WAUKESHA F18GL
ARIEL JGJ/2-1/2 STD

ENERFLEX
10121 – BARLOW TRAIL N.E.
CALGARY ALBERTA CANADA

PERMIT TO PRACTISE APEGGA PERMIT: No. P8651

TITLE PLAN VIEW

DWG NO 31834-201 SHT 1 REV 3

THE INFORMATION CONTAINED HEREIN IS THE CONFIDENTIAL PROPERTY OF TORQMONT ENERGY SYSTEMS AND IS NOT FOR PUBLICATION, AND NO PART THEREOF SHALL BE COPIED OR COMMUNICATED TO A THIRD PARTY WITHOUT AUTHORIZATION FROM TORQMONT ENERGY SYSTEMS.

C:\Users\bmclean.TES\appdata\local\temp\AcPublish_1860\31834-MODEL-AS-BUILT.dwg

PLOT DATE January 07, 2011

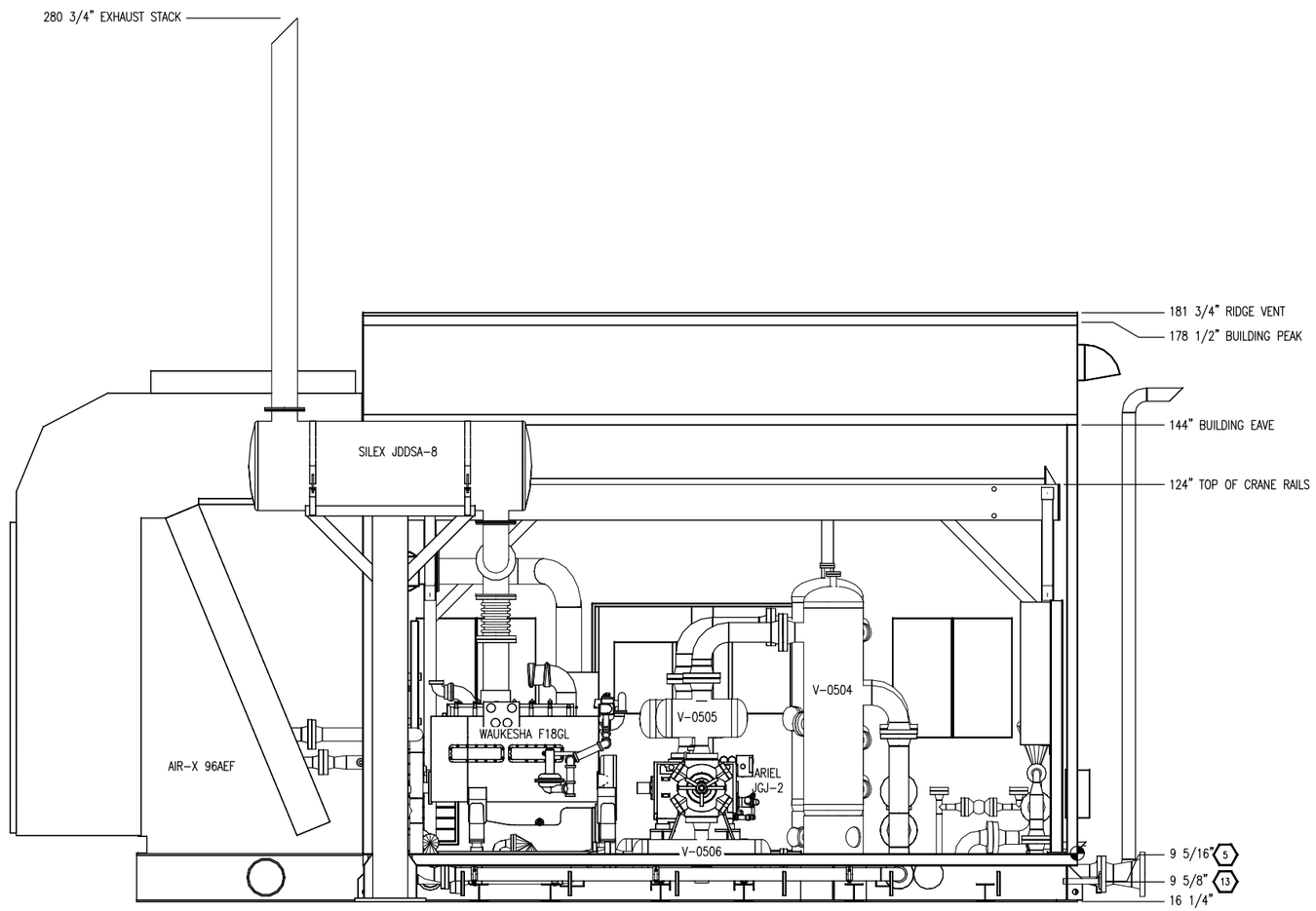

ELEVATION VIEW A-A

DESTROY PREVIOUS COPIES

FINAL AS BUILT

NAME B. McLean DATE 12/14/10

PERMIT TO PRACTISE APEGGA PERMIT: No. P8651

NOTE:
ALL TAIL DIMENSIONS ARE TAKEN FROM REFERENCE POINT ⊕ AT TOP OF SKID

REV	DESCRIPTION	DATE	BY	APR
3	AS BUILT	12/14/10	BM	K.G.
2	REMOVE HOT BYPASS SPOOLING - IFC	09/15/10	BM	K.G.
1	ISSUED FOR CONSTRUCTION	08/04/10	TT	KG

DATE 06/07/10 SCALE 1/2"=1'-0"

DRAWN BY B. McLean CHECKED BY K. Green APPROVED BY D. Campbell

CUST PO N/A

STEP CODE 198 298 490 511 591

FOR HUSKY OIL OPERATIONS LTD.
WAUKESHA F18GL
ARIEL JGJ/2-1/2 STD

ENERFLEX
10121 - BARLOW TRAIL N.E.
CALGARY ALBERTA CANADA

TITLE ELEVATION 'A-A'

DWG NO 31834-201 SHT 2 REV 3

THE INFORMATION CONTAINED HEREIN IS THE CONFIDENTIAL PROPERTY OF TOROMONT ENERGY SYSTEMS AND IS NOT FOR PUBLICATION, AND NO PART THEREOF SHALL BE COPIED OR COMMUNICATED TO A THIRD PARTY WITHOUT AUTHORIZATION FROM TOROMONT ENERGY SYSTEMS.

C:\Users\bmclean.TES\appdata\local\temp\AcPublish_1860\31834-MODEL-AS-BUILT.dwg
PLOT DATE January 07, 2011

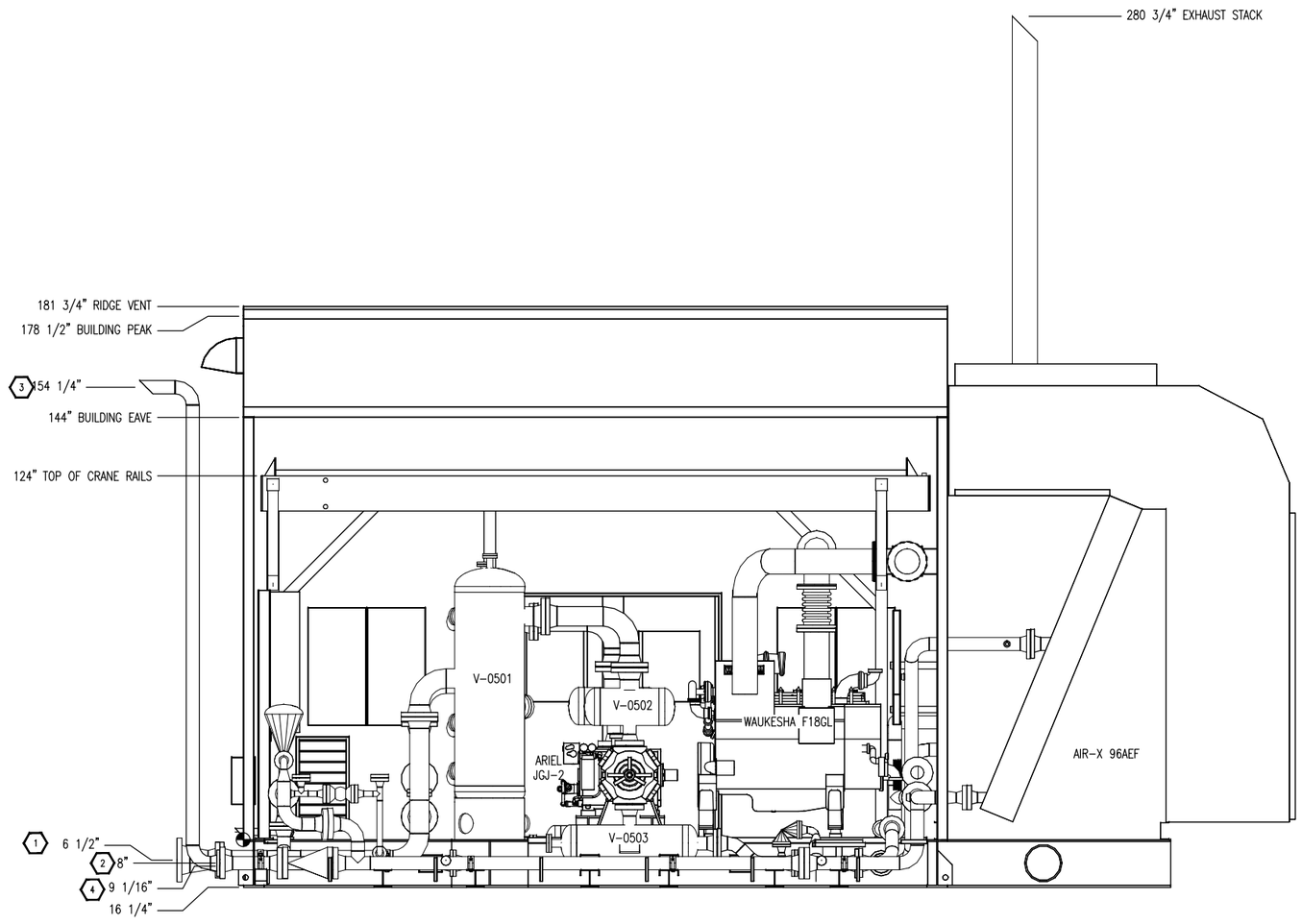

ELEVATION VIEW B-B

NOTE:
ALL TAIL DIMENSIONS ARE TAKEN FROM REFERENCE POINT ⊕ AT TOP OF SKID

REV	DESCRIPTION	DATE	BY	APR
3	AS BUILT	12/14/10	BM	K.G.
2	REMOVE HOT BYPASS SPOOLING - IFC	09/15/10	BM	K.G.
1	ISSUED FOR CONSTRUCTION	08/04/10	TT	KG

DATE 06/07/10 | SCALE 1/2"=1'-0"
DRAWN BY B. McLean | CHECKED BY K. Green | APPROVED BY B. Campbell
CUST PO N/A
STEP CODE 198 298 490 511 591

FOR HUSKY OIL OPERATIONS LTD.
WAUKESHA F18GL
ARIEL JGJ/2-1/2 STD

ENERFLEX
10121 - BARLOW TRAIL N.E.
CALGARY ALBERTA CANADA

DWG NO 31834-201 | SHT 3 | REV 3

TITLE ELEVATION 'B-B'

PERMIT TO PRACTISE APEGGA PERMIT: No. P8651

DESTROY PREVIOUS COPIES

FINAL AS BUILT
NAME B. McLean DATE 12/14/10

THE INFORMATION CONTAINED HEREIN IS THE CONFIDENTIAL PROPERTY OF TORQMONT ENERGY SYSTEMS AND IS NOT FOR PUBLICATION, AND NO PART THEREOF SHALL BE COPIED OR COMMUNICATED TO A THIRD PARTY WITHOUT AUTHORIZATION FROM TORQMONT ENERGY SYSTEMS.

C:\Users\jmclean.TES\appdata\local\temp\AcPublish_1860\31834-MODEL-AS-BUILT.dwg
PLOT DATE January 07, 2011

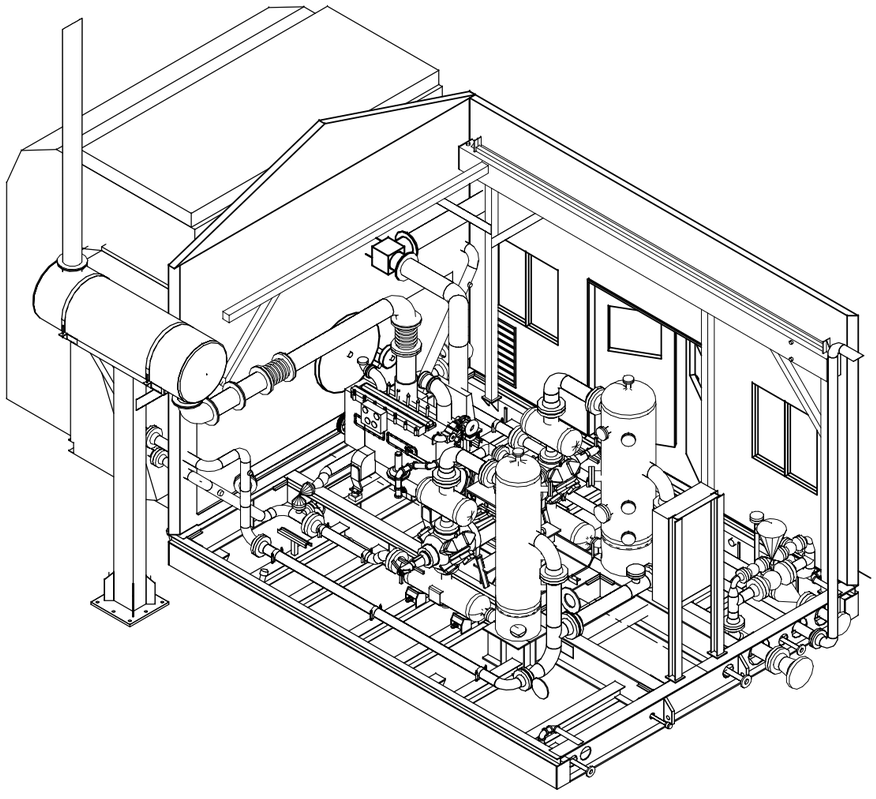

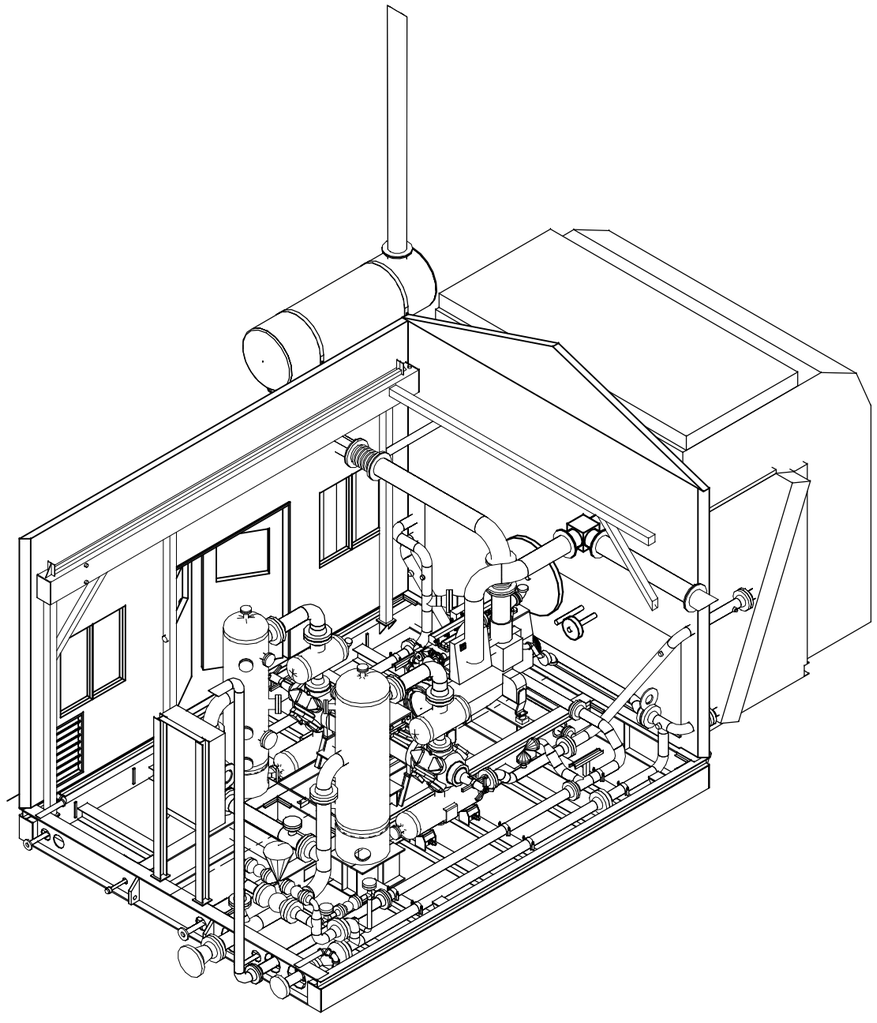

3D VIEW

DESTROY PREVIOUS COPIES

FINAL AS BUILT

NAME B. McLean DATE 12/14/10

REV	DESCRIPTION	DATE	BY	APR
3	AS BUILT	12/14/10	BM	K.G.
2	REMOVE HOT BYPASS SPOOLING - IFC	09/15/10	BM	K.G.
1	ISSUED FOR CONSTRUCTION	08/04/10	TT	KG

DATE 06/07/10 | SCALE 3/8"=1'-0"

DRAWN BY B. McLean | CHECKED BY K. Green | APPROVED BY D. Campbell

CUST PO N/A

STEP CODE 198 298 490 511 591

FOR HUSKY OIL OPERATIONS LTD.
WAUKESHA F18GL
ARIEL JGJ/2-1/2 STD

ENERFLEX
10121 - BARLOW TRAIL N.E.
CALGARY ALBERTA CANADA

PERMIT TO PRACTISE APEGGA PERMIT: No. P8651

TITLE 3D VIEW

DWG NO 31834-201 | SHT 4 | REV 3

THE INFORMATION CONTAINED HEREIN IS THE CONFIDENTIAL PROPERTY OF TORQMONT ENERGY SYSTEMS AND IS NOT FOR PUBLICATION, AND NO PART THEREOF SHALL BE COPIED OR COMMUNICATED TO A THIRD PARTY WITHOUT AUTHORIZATION FROM TORQMONT ENERGY SYSTEMS.

C:\Users\bmcclean.TES\appdata\local\temp\AcPublish_1860\31834-MODEL-AS-BUILT.dwg
PLOT DATE January 07, 2011

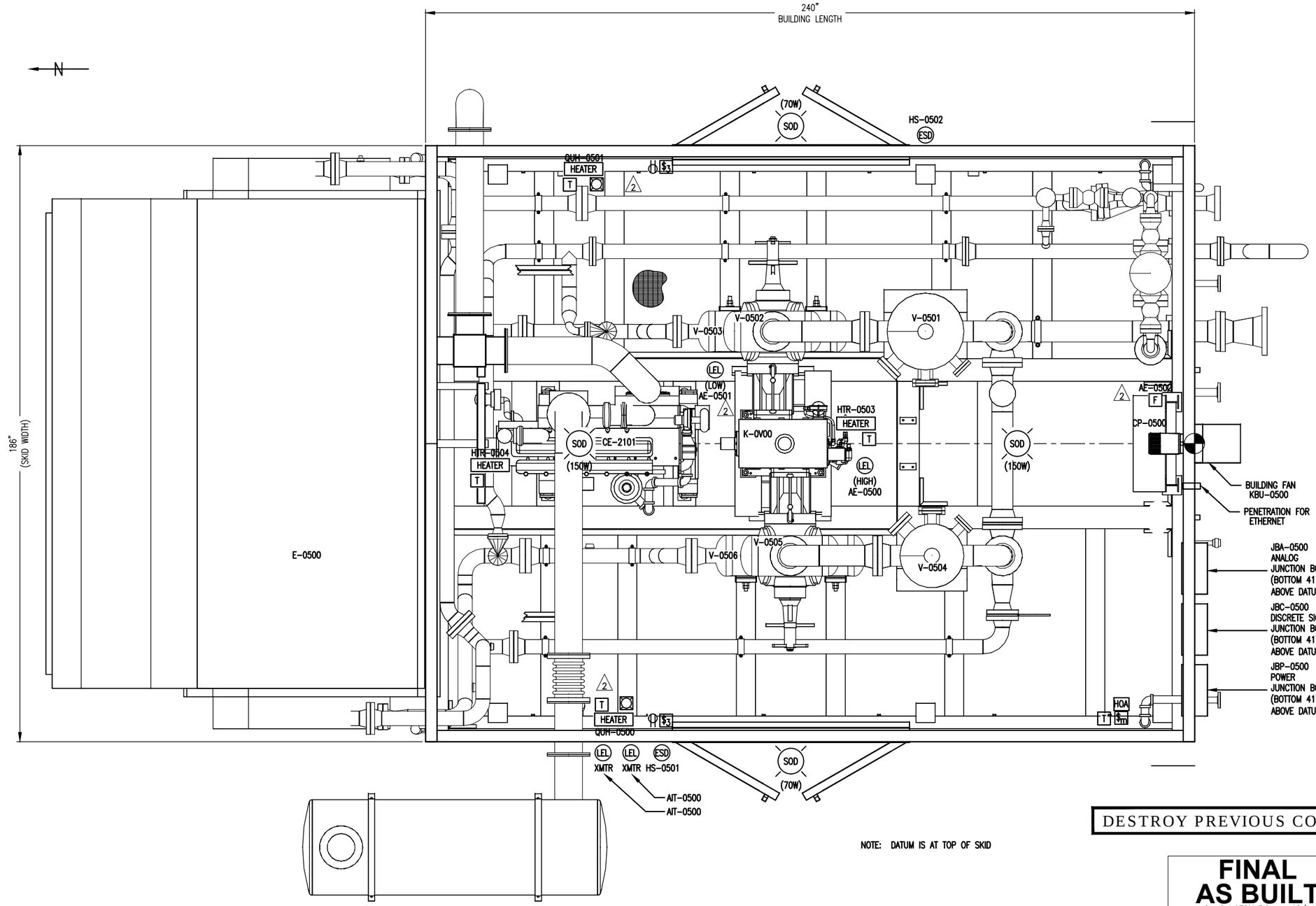

NOTE: DATUM IS AT TOP OF SKID

PLAN VIEW

DESTROY PREVIOUS COPIES

FINAL AS BUILT
NAME C. EASTHOPE DATE 12/14/10

ELECTRICAL LEGEND

SYMBOL	DESCRIPTION
	LIGHT
INC	INCANDESCENT LIGHT
SOD	H.P. SODIUM LIGHT
E	BATTERY POWERED EMERGENCY LIGHT
	RECEPTACLE
T	THERMOSTAT
F	FIRE EYE
H F	FIRE PULL STATION
R	COMBUSTIBLE LEL GAS ALARM BEACON
B	TOXIC GAS H2S ALARM BEACON
C F	FIRE ALARM STROBE
F	ALARM HORN
CO	CO SENSOR
LEL	COMBUSTIBLE DETECTION
H2S	H2S SENSOR
HEATER	HEATER
TIME	TIMER SWITCH
ESD	EMERGENCY SHUT DOWN BUTTON
	-
	-
	-
	-
	-

REV	DESCRIPTION	DATE	BY	APR
4	AS BUILT	12/14/10	CE	K.G.
3	REVISE AS PER CUSTOMER MARK UP	10/29/10	CE	K.G.
2	REVISE AS PER CUSTOMER MARK UP	10/27/10	BM	K.G.
1	ISSUED FOR CONSTRUCTION	08/04/10	BM	K.G.

DATE 06/17/10 | SCALE 3/4"=1'-0"
DRAWN BY B. McLean | CHECKED BY K. Green | APPROVED BY B. Campbell
CUST PO N/A
STEP CODE 198 298 490 511 591

FOR HUSKY OIL OPERATIONS LTD.
WAUKESHA F18GL
ARIEL JGJ/2-1/2 STD

ENERFLEX
10121 - BARLOW TRAIL N.E.
CALGARY ALBERTA CANADA

PERMIT TO PRACTISE APEGGA PERMIT: No. P8651

TITLE ELECTRICAL LAYOUT

DWG NO 31834-201 | SHT 5 | REV 4

THE INFORMATION CONTAINED HEREIN IS THE CONFIDENTIAL PROPERTY OF TORQMONT ENERGY SYSTEMS AND IS NOT FOR PUBLICATION, AND NO PART THEREOF SHALL BE COPIED OR COMMUNICATED TO A THIRD PARTY WITHOUT AUTHORIZATION FROM TORQMONT ENERGY SYSTEMS.

C:\Users\bmclean.TES\appdata\local\temp\AcPublish_1860\31834-M02EL-AS-BUILT.dwg
PLOT DATE January 07, 2011

FLOW DIAGRAM	LINE NUMBER	SERVICE	SIZE (INCH)	FROM	TO	TESI PIPE SPEC	WALL THICKNESS (SCHEDULE)	DESIGN PRESSURE (KPAG)	DESIGN TEMP. (Deg. C)	CORROSION ALLOWANCE (mm)	TEST PRESSURE (KPAG)	X-RAY	NOTES	PIPE MATERIAL	FLANGE MATERIAL	CODE	PWHT
31834-111-SHT. 1	6"-HG-INLET-1-L31R	NORMAL FLUID (AIR)	4 / 6 / 8	AIR INLET 4"-HG-BYPASS-1-C31R	V-0501 INLET 6"-HG-INLET-1-C31R	L31R	40 / 40 / 40	4516	-45/149	1.5875	6774	10%	1, 3	SA-333 Grade 6	SA-350-LF2	B31.3	NO
31834-111-SHT. 1	6"-HG-INLET-1-C31R	NORMAL FLUID (AIR)	3 / 6	6"-HG-INLET-1-L31R	4"-HG-IC1-1-C31R	C31R	40 / 40	4516	-29/149	1.5875	6774	10%	1, 3	SA-106-B	SA-105	B31.3	NO
31834-111-SHT. 1	6"-HG-V-0501-1-C31R	NORMAL FLUID (AIR)	6	V-0501 OUTLET	V-0502 INLET	C31R	40	4516	-29/149	1.5875	6774	10%	1, 3	SA-106-B	SA-105	B31.3	NO
31834-111-SHT. 1	4"-HG-CYL-0501-1-C31R	NORMAL FLUID (AIR)	1.5 / 4	V-0503 OUTLET	4"-HG-CYL-0501-2-L31R	C31R	XS / 40	4447	-29/177	1.5875	6671	10%	1, 3	SA-106-B	SA-105	B31.3	NO
31834-111-SHT. 1	4"-HG-CYL-0501-2-L31R	NORMAL FLUID (AIR)	1.5 / 2 / 4	4"-HG-CYL-0501-1-C31R	2"-HG-CYL-0501-1-C31R IC1 SECTION INLET	L31R	XS / XS / 40	4447	-45/177	1.5875	6671	10%	1, 3	SA-333 Grade 6	SA-350-LF2	B31.3	NO
31834-111-SHT. 1	2"-HG-CYL-0501-1-C31R	NORMAL FLUID (AIR)	2	4"-HG-CYL-0501-2-L31R	4"-HG-CYL-0502-2-L61R	C31R	XS	4447	-29/177	1.5875	6671	10%	1, 3	SA-106-B	SA-105	B31.3	NO
31834-111-SHT. 1	4"-HG-IC1-1-L31R	NORMAL FLUID (AIR)	4	IC1 SECTION OUTLET	4"-HG-IC1-1-C31R 4"-HG-IC1-2-C31R	L31R	40	4516	-45/149	1.5875	6774	10%	1, 3	SA-333 Grade 6	SA-350-LF2	B31.3	NO
31834-111-SHT. 1	4"-HG-IC1-1-C31R	NORMAL FLUID (AIR)	4 / 6	4"-HG-IC1-1-L31R	6"-HG-INLET-1-C31R	C31R	40 / 40	4516	-29/149	1.5875	6774	10%	1, 3	SA-106-B	SA-105	B31.3	NO
31834-111-SHT. 2	4"-HG-IC1-2-C31R	NORMAL FLUID (AIR)	4	4"-HG-IC1-1-L31R	4"-HG-AC-1-L61R	C31R	40	4516	-29/149	1.5875	6774	10%	1, 3	SA-106-B	SA-105	B31.3	NO
31834-111-SHT. 2	6"-HG-V-0504-1-C31R	NORMAL FLUID (AIR)	6	V-0504 OUTLET	V-0505 INLET	C31R	40	4516	-29/149	1.5875	6774	10%	1, 3	SA-106-B	SA-105	B31.3	NO
31834-111-SHT. 2	4"-HG-CYL-0502-1-C61R	NORMAL FLUID (AIR)	4	V-0506 OUTLET	4"-HG-CYL-0502-2-L61R	C61R	XS	8880	-29/177	1.5875	13320	10%	1, 3	SA-106-B	SA-105	B31.3	NO
31834-111-SHT. 2	4"-HG-CYL-0502-2-L61R	NORMAL FLUID (AIR)	1.5 / 2 / 3 / 4	4"-HG-CYL-0502-1-C61R 2"-HG-CYL-0501-1-C31R	4"-HG-PSV-1-C11R (PSV-0502 INLET) AC SECTION INLET	L61R	XS / XS / XS	8880	-45/177	1.5875	13320	10%	1, 3	SA-333 Grade 6	SA-350-LF2	B31.3	NO
31834-111-SHT. 2	4"-HG-AC-1-L61R	NORMAL FLUID (AIR)	3 / 4	AC SECTION OUTLET 4"-HG-IC1-2-C31R	4"-HG-AC-1-C61R	L61R	XS / XS	8880	-45/177	1.5875	13320	10%	1, 3	SA-333 Grade 6	SA-350-LF2	B31.3	NO
31834-111-SHT. 2	4"-HG-AC-1-C61R	NORMAL FLUID (AIR)	4	4"-HG-AC-1-L61R	4"-HG-AC-2-L61R 4"-HG-BYPASS-1-C61R	C61R	XS	8880	-29/177	1.5875	13320	10%	1, 3	SA-106-B	SA-105	B31.3	NO
31834-111-SHT. 2	4"-HG-AC-2-L61R	NORMAL FLUID (AIR)	4	4"-HG-AC-1-C61R	FINAL DISCHARGE	L61R	XS	8880	-45/177	1.5875	13320	10%	1, 3	SA-333 Grade 6	SA-350-LF2	B31.3	NO
31834-111-SHT. 2	4"-HG-BYPASS-1-C61R	NORMAL FLUID (AIR)	1.5 / 2 / 4	4"-HG-AC-1-C61R	4"-HG-BYPASS-1-C31R 1 1/2"-HG-BLOWDOWN-1-C11R	C61R	XS / XS / XS	8880	-29/177	1.5875	13320	10%	1, 3	SA-106-B	SA-105	B31.3	NO
31834-111-SHT. 2	4"-HG-BYPASS-1-C31R	NORMAL FLUID (AIR)	2 / 4	4"-HG-BYPASS-1-C61R	6"-HG-INLET-1-L31R	C31R	XS / 40	4516	-29/149	1.5875	6774	10%	1, 3	SA-106-B	SA-105	B31.3	NO
31834-111-SHT. 2	1 1/2"-HG-BLOWDOWN-1-C11R	NORMAL FLUID (AIR)	1.5	4"-HG-BYPASS-1-C61R	4"-HG-PSV-2-L11R	C11R	XS	1586	-29/149	1.5875	2379	10%	1, 3	SA-106-B	SA-105	B31.3	NO
31834-111-SHT. 2	4"-HG-PSV-1-C11R	NORMAL FLUID (AIR)	2 / 4	4"-HG-CYL-0501-1-C31R (PSV-0501 OUTLET) 4"-HG-CYL-0502-2-L61R (PSV-0502 OUTLET)	4"-HG-PSV-2-C11R	C11R	XS / 40	1586	-29/149	1.5875	2379	10%	1, 3	SA-106-B	SA-105	B31.3	NO
31834-111-SHT. 2	4"-HG-PSV-2-C11R	NORMAL FLUID (AIR)	4	4"-HG-PSV-1-C11R	4"-HG-PSV-2-L11R	C11R	40	1586	-29/149	1.5875	2379	10%	1, 3	SA-106-B	SA-105	B31.3	NO
31834-111-SHT. 2	4"-HG-PSV-2-L11R	NORMAL FLUID (AIR)	1.5 / 4	4"-HG-PSV-2-C11R 1 1/2"-HG-BLOWDOWN-1-C11R	4"-HG-PSV-3-L11R	L11R	XS / 40	1586	-45/149	1.5875	2379	10%	1, 3	SA-333 Grade 6	SA-350-LF2	B31.3	NO
31834-111-SHT. 2	4"-HG-PSV-3-L11R	NORMAL FLUID (AIR)	4	4"-HG-PSV-2-L11R	HIGH PRESSURE VENT HEADER	L11R	40	NA	NA	1.5875	NA	10%	1, 3	SA-333 Grade 6	SA-350-LF2	B31.3	NO

NOTE 1: TEST MEDIUM TO BE H_2O - MINIMUM DURATION 10 MINUTES
NOTE 2: TEST MEDIUM TO BE AIR
NOTE 3: 10% MPI ON ALL FILLET WELDS INCLUDING PSV GUSSETS

PSV TAG#	LOCATION	MAKE	MODEL #	INLET	OUTLET	SET AT
PSV-0501	STAGE #1 DISCHARGE	FARRIS	26FA12-140	1 1/2" - 300# RF	2" - 150# RF	4447.1 kPag @ 177C
PSV-0502	STAGE #2 DISCHARGE	FARRIS	26FA13-140	1 1/2" - 600# RF	2" - 150# RF	4447.1 kPag @ 177C

REVISIONS NO.	ISSUE	DATE
0	RELEASED FOR REGISTRATION	14-Oct-10

PROFESSIONAL ENGINEER ALBERTA
AFENWORK K. MALE
SEAL
Aug 19, 2010
APEGGA PERMIT: NO. P8651

HUSKY OIL OPERATIONS LTD
Site Name:: McMullen TCP
LSD: 03-35-078-25 W4
Waukesha F18GL
ARIEL JGJ/2-1/2 STD
AIR-X-LIMITED 96AEF

ENERFLEX

Project No.	Page No.	By:	Checked:	App'd:	Date:
31834	1 of 1	CK			14-Oct-10

V-0501 1ST STAGE SUCTION SCRUBBER

MFG: EFX
SIZE: 24" OD X 66" S/S
MAWP: 4516.1 kPag @ 149°C
MDMT: -29°C @ 4516.1 kPag
CA: 1/16"
MAT'L: SA-106-B
ELEMENTS: MESH PAD

V-0502 1ST STAGE SUCTION BOTTLE

MFG: EFX
SIZE: 12 3/4" OD X 20" S/S
MAWP: 4516.1 kPag @ 149°C
MDMT: -29°C @ 4516.1 kPag
CA: 1/16"
MAT'L: SA-106-B

V-0503 1ST STAGE DISCHARGE BOTTLE

MFG: EFX
SIZE: 12 3/4" OD X 36" S/S
MAWP: 4447.1 kPag @ 177°C
MDMT: -29°C @ 4447.1 kPag
CA: 1/16"
MAT'L: SA-106-B

CYL-0501 1ST STAGE COMPRESSION CYLINDER

MFG: ARIEL
MODEL: 7 3/8 RJ
SIZE: 7.375" BORE
MAWP: 5826.1 kPag
THROW: #1

IC1 1ST STAGE COOLER SECTION

MAWP: 4447.1 kPag @ 177°C
MDMT: -45°C @ 4447.1 kPag
CA: 1/16"

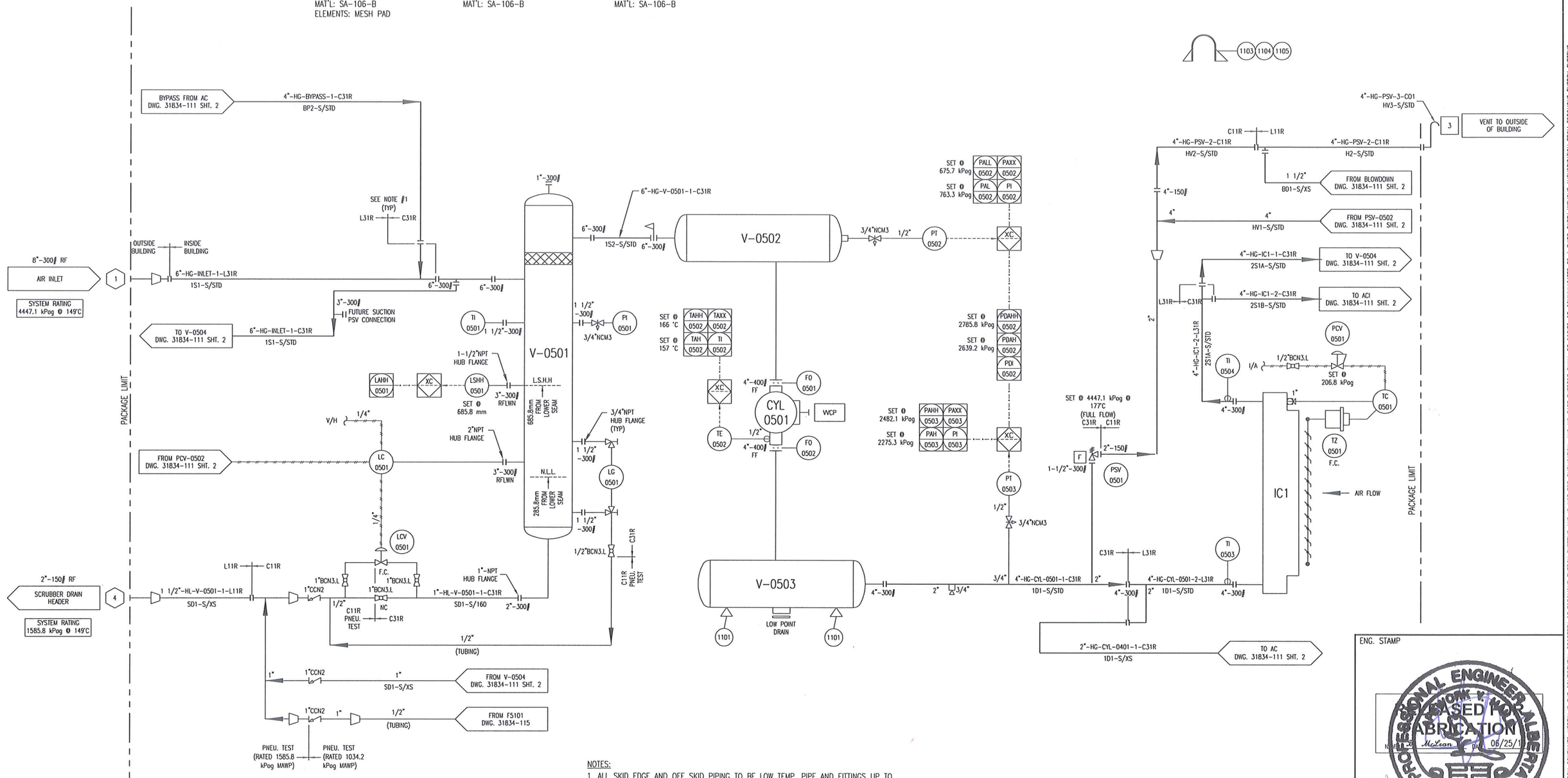

NOTES:
1. ALL SKID EDGE AND OFF SKID PIPING TO BE LOW TEMP. PIPE AND FITTINGS UP TO FIRST FLANGE BREAK INSIDE BUILDING.

REV	DESCRIPTION	DATE	BY	APR
3	FOR REGISTRATION	11/22/10	JH	KG
2	HOT BYPASS REMOVED	09/16/10	JH	KG
1	ISSUED FOR FABRICATION	06/25/10	BM	DC
A	ISSUED FOR APPROVAL	06/04/10	CE	DC

DATE 06/04/10 | SCALE NTS
DRAWN BY C. CASTROPE | CHECKED BY X. LIRECTI | APPROVED BY D. CAMPBELL
CUST PO N/A
STEP CODE 198 490 511 591

PERMIT TO PRACTISE APEGGA PERMIT: No. P8651

FOR HUSKY OIL OPERATIONS LTD.
WAUKESHA F18GL
ARIEL JGJ/2-1/2 STD

ENERFLEX
10121 - BARLOW TRAIL N.E.
CALGARY ALBERTA CANADA

ENG. STAMP
PROFESSIONAL ENGINEER ALBERTA
RELEASED FOR FABRICATION
06/25/10
AW 23/2010

TITLE P & I DIAGRAM PROCESS GAS STAGE #1

DWG NO 31834-111 | SHT 1 | REV 3

THE INFORMATION CONTAINED HEREIN IS THE CONFIDENTIAL PROPERTY OF TOROMONT ENERGY SYSTEMS AND IS NOT FOR PUBLICATION, AND NO PART THEREOF SHALL BE COPIED OR COMMUNICATED TO A THIRD PARTY WITHOUT AUTHORIZATION FROM TOROMONT ENERGY SYSTEMS.

PLOT DATE November 22, 2010
P:\30000 Projects\31834 Husky R400 F18GL JGJ2\DRAFTING\Pdd03\31834-111-REV3.dwg

V-0505 2ND STAGE SUCTION SCRUBBER

MFG: EFX
SIZE: 20" OD X 66" S/S
MAWP: 4516.1 kPag @ 149°C
MDMT: -29°C @ 4516.1 kPag
CA: 1/16"
MAT'L: SA-106-B
ELEMENTS: MESH PAD

V-0505 2ND STAGE SUCTION BOTTLE

MFG: EFX
SIZE: 12 3/4" OD X 20" S/S
MAWP: 4516.1 kPag @ 149°C
MDMT: -29°C @ 4516.1 kPag
CA: 1/16"
MAT'L: SA-106-B

V-0506 2ND STAGE DISCHARGE BOTTLE

MFG: EFX
SIZE: 12.75" OD X 36" S/S
MAWP: 8756.3 kPag @ 177°C
MDMT: -29°C @ 8756.3 kPag
CA: 1/16"
MAT'L: SA-106-B

CYL-0502 2ND STAGE COMPRESSION CYLINDER

MFG: ARIEL
MODEL: 6 3/8 RJ
SIZE: 6.000" BORE
MAWP: 8756.3 kPag
THROW: #2

AC 2ND STAGE COOLER SECTION

MAWP: 8873.6 kPag @ 177°C
MDMT: -45°C @ 8873.6 kPag
CA: 1/16"

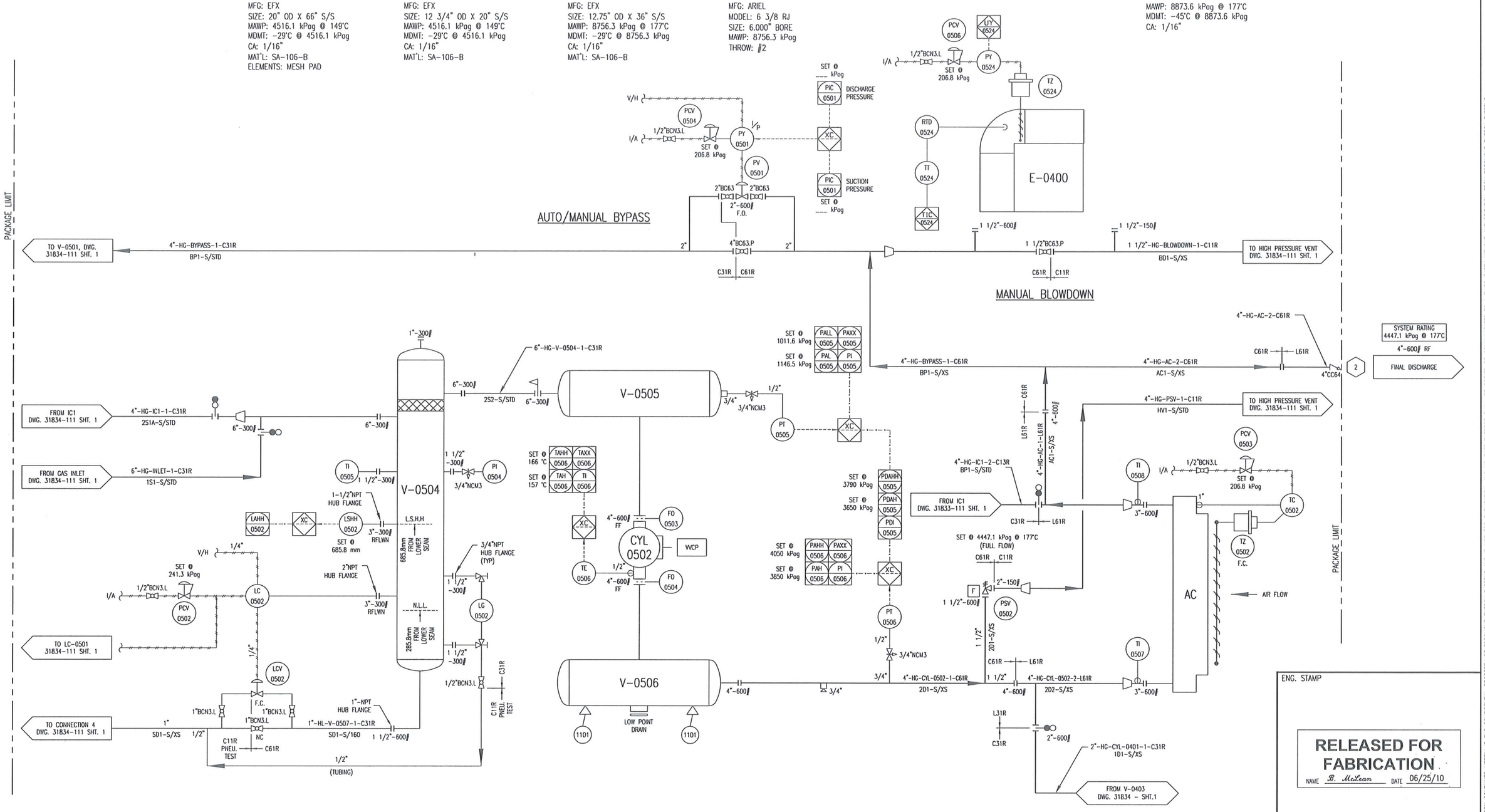

ENG. STAMP

RELEASED FOR FABRICATION
NAME B. McLean DATE 06/25/10

PERMIT TO PRACTISE APEGGA PERMIT: No. P8651

REV	DESCRIPTION	DATE	BY	APR
3	FOR REGISTRATION	11/22/10	JH	KG
2	HOT BYPASS REMOVED	09/16/10	JH	KG
1	ISSUED FOR FABRICATION	06/25/10	BM	DC
A	ISSUED FOR APPROVAL	06/04/10	CE	DC

DATE 06/04/10 | SCALE NTS
DRAWN BY C. EASTKOPE | CHECKED BY K. GREEN | APPROVED BY B. CAMPBELL
CUST PO N/A
STEP CODE 198 490 511 591

FOR HUSKY OIL OPERATIONS LTD. WAUKESHA F18GL ARIEL JGJ/2-1/2 STD

ENERFLEX
10121 - BARLOW TRAIL N.E. CALGARY ALBERTA CANADA

TITLE P & I DIAGRAM PROCESS GAS STAGE #2

DWG NO 31834-111 | SHT 2 | REV 3

THE INFORMATION CONTAINED HEREIN IS THE CONFIDENTIAL PROPERTY OF TORONTO ENERGY SYSTEMS AND IS NOT FOR PUBLICATION, AND NO PART THEREOF SHALL BE COPIED OR COMMUNICATED TO A THIRD PARTY WITHOUT AUTHORIZATION FROM TORONTO ENERGY SYSTEMS.

PLOT DATE November 22, 2010 P:\3000 Projects\31834 Husky R400 F18GL JGJ\DRAFTING\PAID\31834-111-REV3.dwg

PROJECT DESCRIPTION

ONE (1) AIR COMPRESSOR PACKAGE
FOR: HUSKY OIL OPERATIONS LTD.
LOCATION NAME: MCMULLEN THERMAL CONDUCTION PILOT (TCP) PROJECT
LSD: 03-35-078-25 W4

FABRICATED BY:

ENERFLEX LTD.
CALGARY, ALBERTA, CANADA

TANK CAPACITIES

GLYCOL STORAGE TANK:	330 LITERS
WASTE OIL STORAGE TANK:	330 LITERS
CYLINDER LUBE OIL DAYTANK:	300 LITERS
COMPR./ENGINE LUBE OIL DAYTANK:	300 LITERS

POWER REQUIREMENTS

ENGINE IGNITION SYSTEM:	VOL: 24 VDC
CONTROL PANEL:	VOL: 24 VDC
FIRE DETECTION:	VOL: 24 VDC
LEL DETECTION:	VOL: 24 VDC
LIGHTS:	VOL: 120 VAC
BUILDING HEATERS:	VOL: 120 VAC
BUILDING FANS:	VOL: 115 VAC
IMMERSION HEATERS:	VOL: 120 VAC

SYSTEM CONSUMABLES

COMPRESSOR CRANKCASE LUBE OIL:	ESSO GMA40, LOW ASH, 22.7 LITERS
COMPRESSOR CYLINDER LUBE OIL	ISO 100 SYNTHETIC, LOW ASH
ENGINE CRANKCASE LUBE OIL:	ESSO GMA40, LOW ASH, 166.6 LITERS
	NORKOOL, 50% ETHYLENE INHIBITED GLYCOL/WATER SOLUTION IN ENGINE & AUXILIARY JACKED WATER SYSTEMS
	EJW CAPACITY: 208 LITERS
	AJW CAPACITY: 95 LITERS

DESIGN SPECIFICATION:

ENERFLEX LTD. (EFX) SCOPE OF SUPPLY ON THIS PROJECT CONSISTS OF ONE SKIDDED GAS COMPRESSOR PACKAGE.

PACKAGE CONSISTS OF ONE (1) WAUKESHA F18GL ENGINE DRIVING AN ARIEL JGJ/2, ONE/TWO STAGE, AIR COMPRESSOR.

PRIMER: -TPS-SP-001, FIN-1, RED OXIDE
PAINT: -TPS-SP-001, FIN-1, 20-F "WARM GREY"
PROCESS PIPING:
- -10% RADIOGRAPHIC TESTING
- -10% MT ON FILLET WELDS
- -1/16" CORROSION ALLOWANCE
- -NO PWHT
- -SSPC-SP3
- -SPOOLING BETWEEN CONE STRAINER AND COMPRESSOR SUCTION FLANGE SANDBLASTED INTERNALLY SSPC-SP6
- -NO PICKLING
- -NDE INTERPRETATION TO BE CGSB
- -MTR'S REQUIRED

VESSELS:
- -5% RADIOGRAPHIC TESTING
- -10% MT ON FILLET WELDS
- -NO PWHT
- -SSPC-SP3
- -SUCTION VESSELS BETWEEN CONE STRAINER AND COMPRESSOR SUCTION FLANGE SANDBLASTED INTERNALLY SSPC-SP6
- -NO PICKLING
- -NDE INTERPRETATION TO BE CGSB
- -MTR'S REQUIRED

EQUIPMENT LIST (EACH EQUIPMENT NUMBER IS PRECEDED WITH A FUNCTIONAL LOCATION CODE.)

TAG NO.	DESCRIPTION	P&ID
V-0501	STAGE 1 SUCTION SCRUBBER	31834-111 SHT. 1
V-0502	STAGE 1 SUCTION BOTTLE	31834-111 SHT. 1
V-0503	STAGE 1 DISCHARGE BOTTLE	31834-111 SHT. 1
V-0504	STAGE 2 SUCTION SCRUBBER	31834-111 SHT. 2
V-0505	STAGE 2 SUCTION BOTTLE	31834-111 SHT. 2
V-0506	STAGE 2 DISCHARGE BOTTLE	31834-111 SHT. 2
CYL-0501	STAGE 1 COMPRESSION CYLINDER	31834-111 SHT. 1
CYL-0502	STAGE 2 COMPRESSION CYLINDER	31834-111 SHT. 2
IC1	STAGE 1 COOLER SECTION	31834-111 SHT. 1
AC	STAGE 2 COOLER SECTION	31834-111 SHT. 2
CE-0501	ENGINE	31834-112 SHT. 1
K-0500	RECIPROCATING GAS COMPRESSOR FRAME	31834-112 SHT. 1
CP-0501	CONTROL PANEL	31834-112 SHT. 1
E-0500	COOLER FRAME	31834-112 SHT. 1
E-0501	COMPRESSOR FRAME OIL COOLER	31834-113 SHT. 1
FR-0500	COMPRESSOR FRAME OIL FILTER	31834-113 SHT. 1
P-0500	COMPRESSOR LUBE OIL PUMP	31834-113 SHT. 1
P-0501	COMPRESSOR FRAME OIL PUMP	31834-113 SHT. 1
T-0500	LUBE OIL DAYTANK	31834-113 SHT. 1
T-0501	WASTE OIL TANK	31834-113 SHT. 1
T-0502	COMPRESSOR/ENGINE OIL DAYTANK	31834-114 SHT. 1
T-0503	WASTE GLYCOL TANK	31834-116 SHT. 1
T-0504	GLYCOL (EJW) SURGE TANK	31834-116 SHT. 1
T-0505	GLYCOL (AJW) SURGE TANK	31834-116 SHT. 2
P-0502	EJW PUMP	31834-116 SHT. 1
P-0503	AJW PUMP	31834-116 SHT. 2
EJW	EJW COOLER	31834-116 SHT. 1
AJW	AJW COOLER	31834-116 SHT. 2
FR-0501	AIR FILTER HOUSING	31834-117 SHT. 1

DESIGN CRITERIA & APPLICABLE CODES

SITE ELEVATION:		1886 FT ABOVE MEAN SEA LEVEL
BAROMETRIC PRESSURE:		94.518 KPAA
AMBIENT TEMPERATURE:	MAXIMUM	37.8°C
	MINIMUM	-45°C
WIND SPEED:	MAXIMUM	160 km/hr
PROCESS INLET:	DESIGN	4447.1 KPAG @ 149°C
PROCESS FINAL DISCHARGE:	DESIGN	8756.3 KPAG @ 177°C
INSTRUMENT GAS:	MINIMUM PRESSURE	344.7 KPAG
	MAXIMUM PRESSURE	1034.2 KPAG
	QUALITY	FILTERED/DRY, 50°F MAXIMUM DEW POINT
APPLICABLE CODE:	CODE PIPING	B31.3 - LATEST EDITION
	NON-CODE PIPING	TESI C01, 1mm CA
	VESSEL	ASME SECTION VIII
	EXCHANGER	ASME SECTION VIII
	STRUCTURAL	AWS D1.1
	ELECTRICAL	CEC
REGISTRATION:	VESSEL	AB, BC, SASK
MISCELLANEOUS:	GASKETS	CG TYPE, SPIRAL WOUND, CHLOROCARB FILLED, 316SS
	PROCESS PIPE	CARBON STEEL
	UTILITY PIPE	CARBON STEEL
	FLANGES	RAISED FACE (UNLESS OTHERWISE NOTED)
	ORIFICE PLATES	PER ACOUSTICAL STUDY
	THREAD SEALANT	JETLUBE ONLY (SWAK NOT PERMITTED)
TUBING & FITTINGS: (SPE-010-TUB)	PROCESS	TUBING - 316(SS) SMLS, 3/8" MIN ø
		FITTINGS - 316(SS)
		FERRULES - 316(SS)
	UTILITY	TUBING - 304(SS) SMLS
		FITTINGS - ZINC PLATED CS
		FERRULES - 316(SS) BACK / CS FRONT
	FRAME INTERNALS	TUBING - 316(SS) SMLS
		FITTINGS - ZINC PLATED (SS FERRULES)
ELECTRICAL:		RIGID ALUMINUM CONDUIT
SUITABLE FOR USE IN:		CLASS 1, DIV 2, GROUP D

ENG. STAMP

CERTIFIED AS BUILT
NAME B. McLean DATE 12/21/10

PERMIT TO PRACTISE APEGGA PERMIT: No. P8651

REV	DESCRIPTION	DATE	BY	APR
3	AS BUILT	12/21/10	BM	KG
2	REVISED CYLINDER LUBE OIL TYPE	12/13/10	BM	KG
1	ISSUED FOR FABRICATION	06/25/10	BM	DC
A	ISSUED FOR APPROVAL	06/04/10	CE	DC

DATE 06/04/10 | SCALE NTS
DRAWN BY C. EASTHOPE | CHECKED BY K. BIRCEN | APPROVED BY B. CAMPBELL
CUST PO N/A
STEP CODE N/A

FOR HUSKY OIL OPERATIONS LTD.
WAUKESHA F18GL
ARIEL JGJ/2-1/2 STD

ENERFLEX
10121 - BARLOW TRAIL N.E.
CALGARY ALBERTA CANADA

TITLE P & I DIAGRAM
PROJECT DESCRIPTION
AND OVERVIEW

DWG NO 31834-099 | SHT 1 | REV 3

THE INFORMATION CONTAINED HEREIN IS THE CONFIDENTIAL PROPERTY OF TOROMONT ENERGY SYSTEMS AND IS NOT FOR PUBLICATION, AND NO PART THEREOF SHALL BE COPIED OR COMMUNICATED TO A THIRD PARTY WITHOUT AUTHORIZATION FROM TOROMONT ENERGY SYSTEMS.

PLOT DATE January 07, 2011 C:\Users\bmclean.TES\appdata\local\temp\AcPublish_1860\31834-111-ASBUILT.dwg

V-0501 1ST STAGE SUCTION SCRUBBER

MFG: EFX
SIZE: 24" OD X 66" S/S
MAWP: 4516.1 kPag @ 149°C
MDMT: −29°C @ 4516.1 kPag
CA: 1/16"
MAT'L: SA-106-B
ELEMENTS: MESH PAD

V-0502 1ST STAGE SUCTION BOTTLE

MFG: EFX
SIZE: 12 3/4" OD X 20" S/S
MAWP: 4516.1 kPag @ 149°C
MDMT: −29°C @ 4516.1 kPag
CA: 1/16"
MAT'L: SA-106-B

V-0503 1ST STAGE DISCHARGE BOTTLE

MFG: EFX
SIZE: 12 3/4" OD X 36" S/S
MAWP: 4447.1 kPag @ 177°C
MDMT: −29°C @ 4447.1 kPag
CA: 1/16"
MAT'L: SA-106-B

CYL-0501 1ST STAGE COMPRESSION CYLINDER

MFG: ARIEL
MODEL: 7 3/8 RJ
SIZE: 7.375" BORE
MAWP: 5826.1 kPag
THROW: #1

IC1 1ST STAGE COOLER SECTION

MAWP: 4447.1 kPag @ 177°C
MDMT: −45°C @ 4447.1 kPag
CA: 1/16"

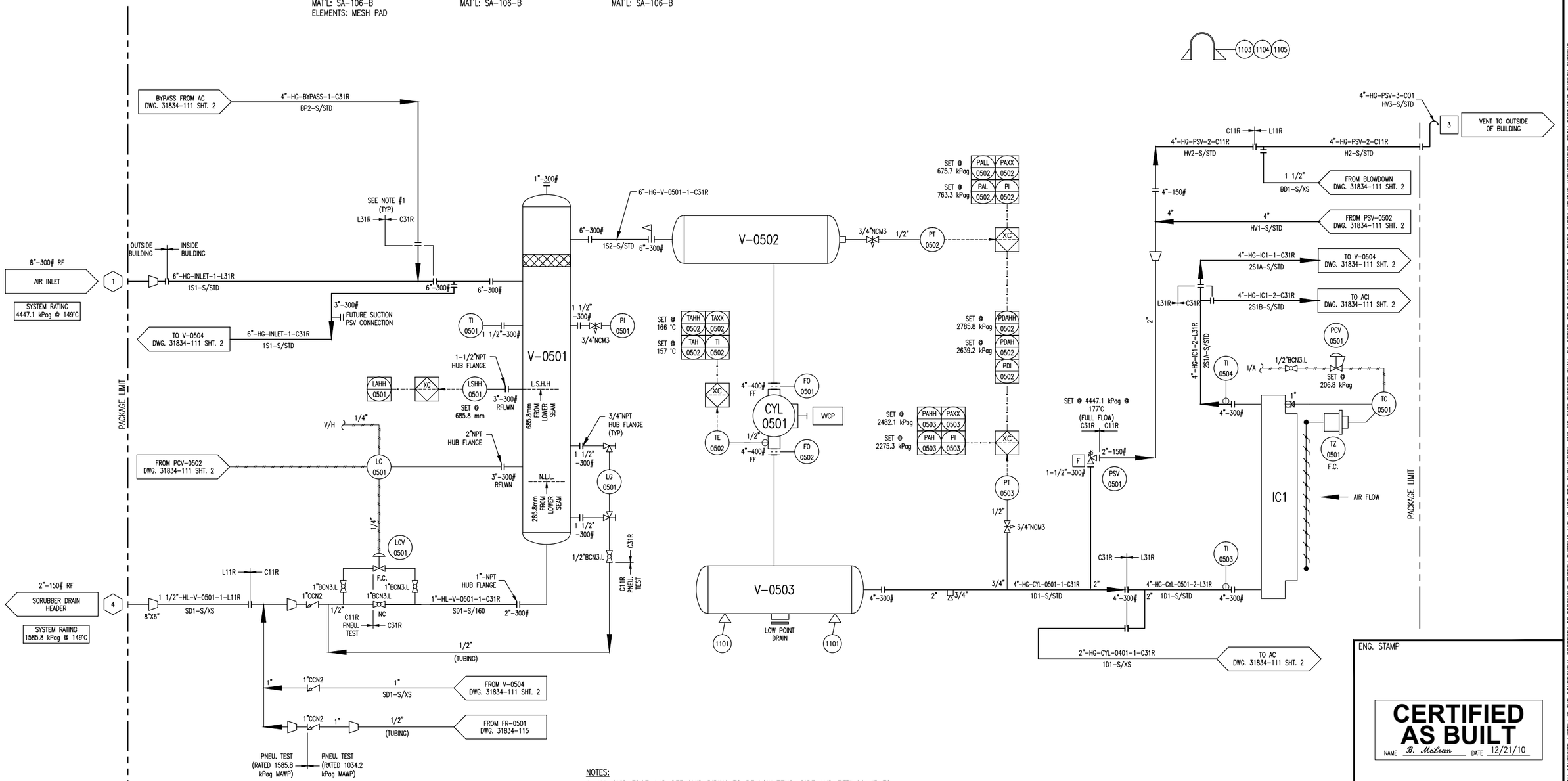

NOTES:
1. ALL SKID EDGE AND OFF SKID PIPING TO BE LOW TEMP. PIPE AND FITTINGS UP TO FIRST FLANGE BREAK INSIDE BUILDING.

REV	DESCRIPTION	DATE	BY	APR
4	AS BUILT	12/21/10	JH	KG
3	FOR REGISTRATION	11/22/10	JH	KG
2	HOT BYPASS REMOVED	09/16/10	JH	KG
1	ISSUED FOR FABRICATION	06/25/10	BM	DC
A	ISSUED FOR APPROVAL	06/04/10	CE	DC

DATE 06/04/10 | SCALE NTS
DRAWN BY C. EASTHOPE | CHECKED BY K. GREEN | APPROVED BY S. CAMPBELL
CUST PO N/A
STEP CODE 198 490 511 591

PERMIT TO PRACTISE APEGGA PERMIT: No. P8651

FOR HUSKY OIL OPERATIONS LTD. WAUKESHA F18GL ARIEL JGJ/2-1/2 STD

ENERFLEX
10121 – BARLOW TRAIL N.E.
CALGARY ALBERTA CANADA

TITLE P & I DIAGRAM PROCESS GAS STAGE #1

DWG NO 31834-111 | SHT 1 | REV 4

ENG. STAMP
CERTIFIED AS BUILT
NAME B. McLean DATE 12/21/10

THE INFORMATION CONTAINED HEREIN IS THE CONFIDENTIAL PROPERTY OF TOROMONT ENERGY SYSTEMS AND IS NOT FOR PUBLICATION, AND NO PART THEREOF SHALL BE COPIED OR COMMUNICATED TO A THIRD PARTY WITHOUT AUTHORIZATION FROM TOROMONT ENERGY SYSTEMS.

PLOT DATE January 07, 2011 C:\Users\bmclean.TES\appdata\local\temp\AcPublish_1860\31834-111-ASBUILT.dwg

V-0505 2ND STAGE SUCTION SCRUBBER

MFG: EFX
SIZE: 20" OD X 66" S/S
MAWP: 4516.1 kPag @ 149°C
MDMT: -29°C @ 4516.1 kPag
CA: 1/16"
MAT'L: SA-106-B
ELEMENTS: MESH PAD

V-0505 2ND STAGE SUCTION BOTTLE

MFG: EFX
SIZE: 12 3/4" OD X 20" S/S
MAWP: 4516.1 kPag @ 149°C
MDMT: -29°C @ 4516.1 kPag
CA: 1/16"
MAT'L: SA-106-B

V-0506 2ND STAGE DISCHARGE BOTTLE

MFG: EFX
SIZE: 12.75" OD X 36" S/S
MAWP: 8756.3 kPag @ 177°C
MDMT: -29°C @ 8756.3 kPag
CA: 1/16"
MAT'L: SA-106-B

CYL-0502 2ND STAGE COMPRESSION CYLINDER

MFG: ARIEL
MODEL: 6 3/8 RJ
SIZE: 6.000" BORE
MAWP: 8756.3 kPag
THROW: #2

AC 2ND STAGE COOLER SECTION

MAWP: 8873.6 kPag @ 177°C
MDMT: -45°C @ 8873.6 kPag
CA: 1/16"

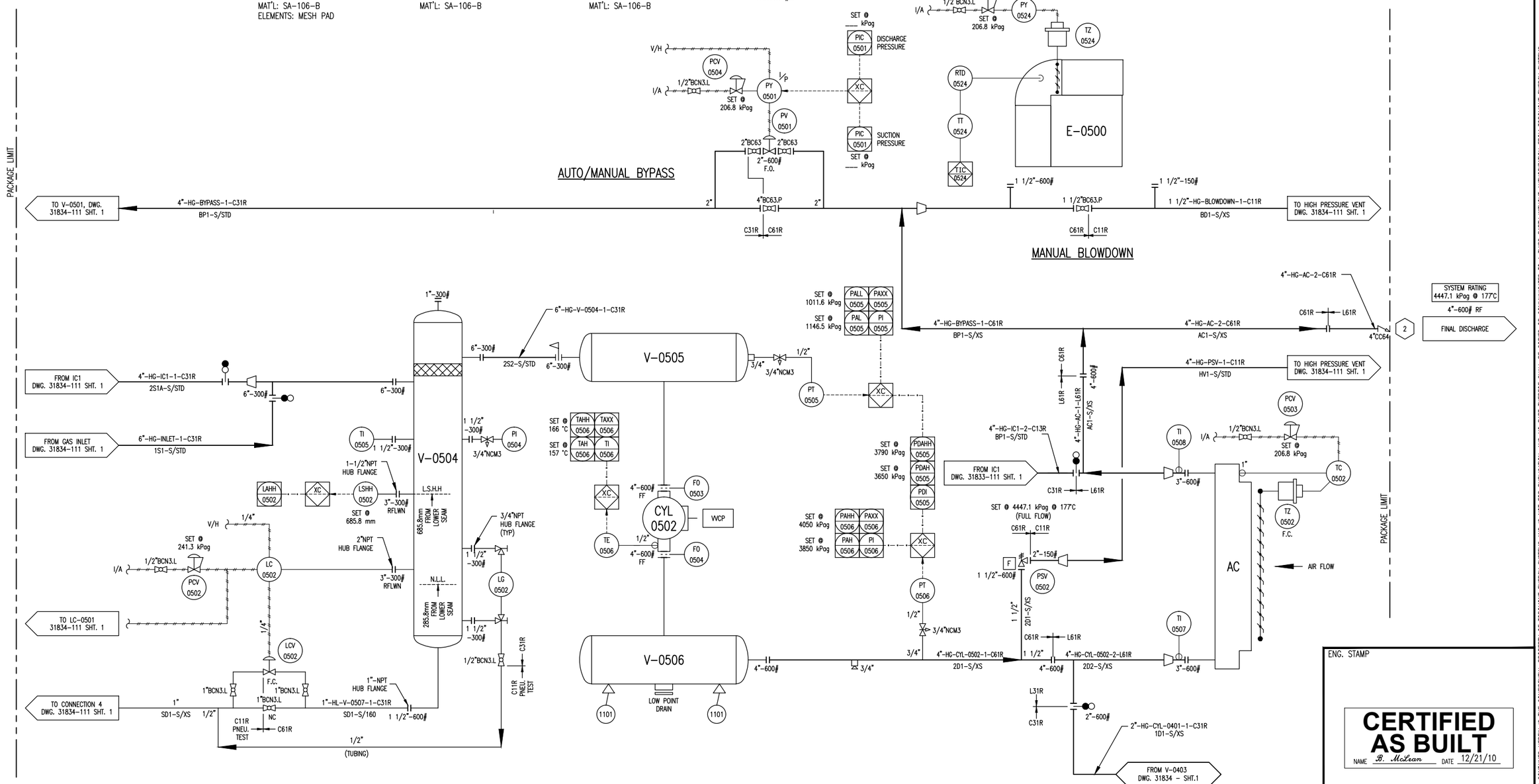

ENG. STAMP

CERTIFIED AS BUILT
NAME B. McLean DATE 12/21/10

PERMIT TO PRACTISE APEGGA PERMIT: No. P8651

REV	DESCRIPTION	DATE	BY	APR
4	AS BUILT	12/21/10	JH	KG
3	FOR REGISTRATION	11/22/10	JH	KG
2	HOT BYPASS REMOVED	09/16/10	JH	KG
1	ISSUED FOR FABRICATION	06/25/10	BM	DC
A	ISSUED FOR APPROVAL	06/04/10	CE	DC

DATE 06/04/10 | SCALE NTS
DRAWN BY C. EASTHOPE | CHECKED BY K. GREEN | APPROVED BY B. CAMPBELL
CUST PO N/A
STEP CODE 198 490 511 591

FOR HUSKY OIL OPERATIONS LTD. WAUKESHA F18GL ARIEL JGJ/2-1/2 STD

ENERFLEX
10121 - BARLOW TRAIL N.E.
CALGARY ALBERTA CANADA

TITLE P & I DIAGRAM PROCESS GAS STAGE #2

DWG NO 31834-111 | SHT 2 | REV 4

THE INFORMATION CONTAINED HEREIN IS THE CONFIDENTIAL PROPERTY OF TORQMONT ENERGY SYSTEMS AND IS NOT FOR PUBLICATION, AND NO PART THEREOF SHALL BE COPIED OR COMMUNICATED TO A THIRD PARTY WITHOUT AUTHORIZATION FROM TORQMONT ENERGY SYSTEMS.

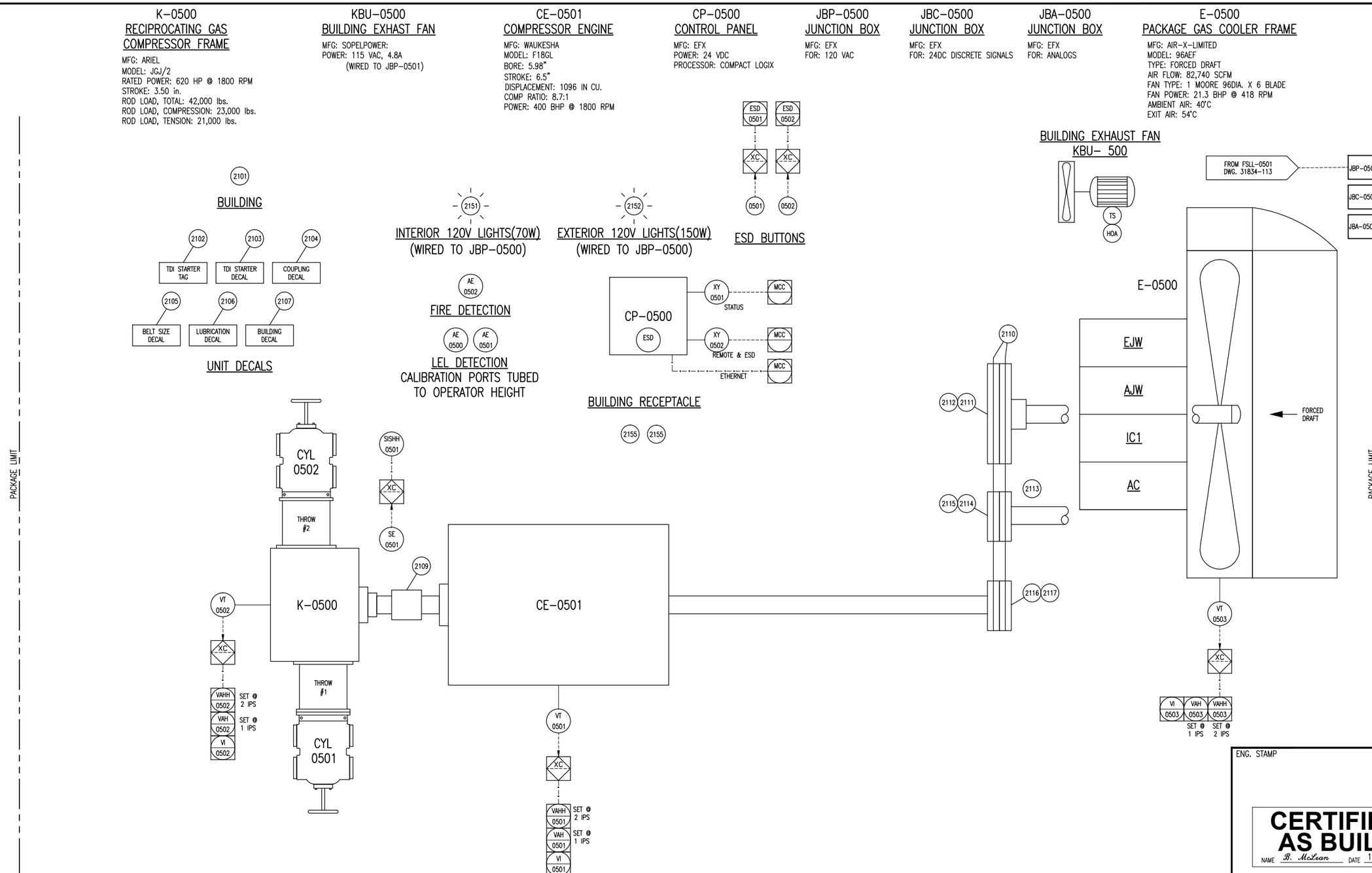

ENG. STAMP

CERTIFIED AS BUILT

NAME B. McLean DATE 12/21/10

PERMIT TO PRACTISE: APEGGA PERMIT: No. P8651

REV	DESCRIPTION	DATE	BY	APR
4	AS BUILT	12/21/10	JH	KG
3	FOR REGISTRATION	11/22/10	JH	KG
2	REVISED AS PER CUSTOMER MARK UP	09/16/10	JH	KG
1	ISSUED FOR FABRICATION	06/25/10	BM	DC
A	ISSUED FOR APPROVAL	06/04/10	CE	DC

DATE 06/04/10 SCALE NTS
DRAWN BY C.EASTHOPE CHECKED BY K.GREEN APPROVED BY D.CAMPBELL
CUST PO N/A
STEP CODE 151 198 511 712 721

FOR HUSKY OIL OPERATIONS LTD.
WAUKESHA F18GL
ARIEL JGJ/2-1/2 STD

ENERFLEX
10121 - BARLOW TRAIL N.E.
CALGARY ALBERTA CANADA

TITLE P & I DIAGRAM
DRIVE TRAIN / CONTROL PANEL

DWG NO 31834-112 SHT 1 REV 4

THE INFORMATION CONTAINED HEREIN IS THE CONFIDENTIAL PROPERTY OF TOROMONT ENERGY SYSTEMS AND IS NOT FOR PUBLICATION, AND NO PART THEREOF SHALL BE COPIED OR COMMUNICATED TO A THIRD PARTY WITHOUT AUTHORIZATION FROM TOROMONT ENERGY SYSTEMS.

C:\Users\bmclean.TES\appdata\local\temp\AcPublish_1860\31834-111-ASBUILT.dwg
PLOT DATE January 07, 2011

T-0500
CYL. LUBE OIL DAYTANK
MFG: EFX
SIZE: 12'x8'x1/4" HSS-18' 11"L
MAT'L: SA-36
CAPACITY: 300L

T-0501
WASTE OIL STORAGE TANK
MFG: EFX
SIZE: 12'x8'x1/4" HSS-19' 11"L
MAT'L: SA-36
CAPACITY: 330L

P-0500
COMPRESSOR LUBE OIL PUMP
MFG: ARIEL
PLUNGER PUMP
P/N: C-0084
DRIVE: PLUNGER

P-0501
COMPRESSOR FRAME OIL PUMP
MFG: ARIEL
MAX. FLOW: 10 GPM
P/N: B-0525
DRIVE: CHAIN

FR-0500
COMPRESSOR FRAME OIL FILTER
MFG: ARIEL
ELEMENT: ARIEL
P/N: A-0061

E-0501
COMPRESSOR FRAME OIL COOLER
MFG: ARIEL
MODEL: B-1962
DRAWING#: A-4154

P-0504
COMPRESSOR PRE-LUBE OIL PUMP
MFG: YAMADA
MAX. FLOW: 28 GPM

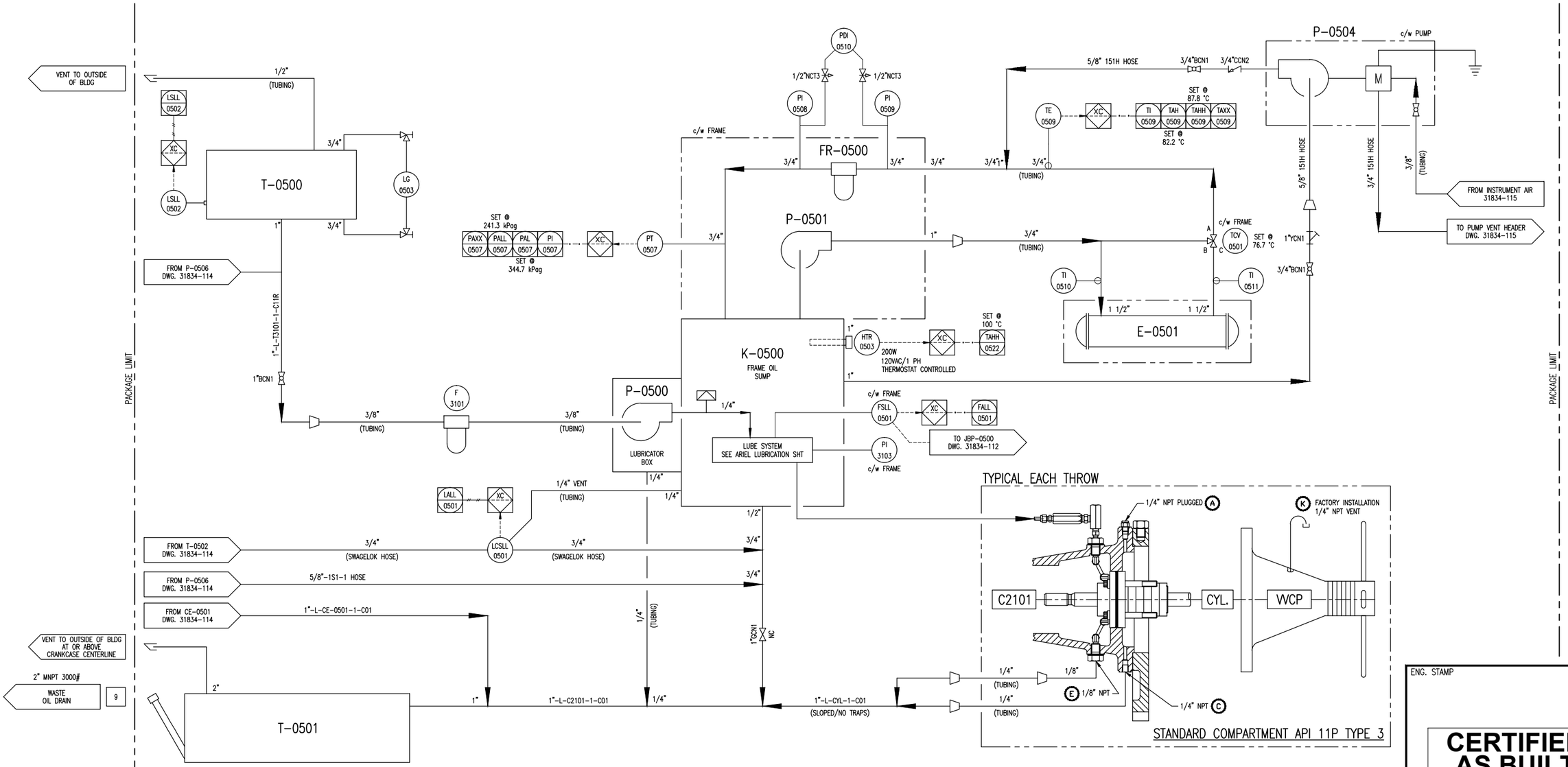

NOTES:
1. (LETTER) LETTER TAGS REFER TO DWG. #DANDV-ARIELSTD.

ENG. STAMP

CERTIFIED AS BUILT
NAME B. McLean DATE 12/21/10

PERMIT TO PRACTISE APEGGA PERMIT: No. P8651

REV	DESCRIPTION	DATE	BY	APR
4	AS BUILT	12/21/10	JH	KG
3	FOR REGISTRATION	11/22/10	JH	KG
2	REVISED AS PER CUSTOMER MARK UP	09/16/10	JH	KG
1	ISSUED FOR FABRICATION	06/25/10	BM	DC
A	ISSUED FOR APPROVAL	06/04/10	CE	DC

DATE 06/04/10 | SCALE NTS
DRAWN BY C. ENSTROPE | CHECKED BY K. GREEN | APPROVED BY B. CAMPBELL
CUST PO N/A
STEP CODE 198 511 591

FOR HUSKY OIL OPERATIONS LTD.
WAUKESHA F18GL
ARIEL JGJ/2-1/2 STD

ENERFLEX
10121 - BARLOW TRAIL N.E.
CALGARY ALBERTA CANADA

TITLE P & I DIAGRAM COMPRESSOR LUBE OIL / UTILITIES

DWG NO 31834-113 | SHT 1 | REV 4

THE INFORMATION CONTAINED HEREIN IS THE CONFIDENTIAL PROPERTY OF TOROMONT ENERGY SYSTEMS AND IS NOT FOR PUBLICATION, AND NO PART THEREOF SHALL BE COPIED OR COMMUNICATED TO A THIRD PARTY WITHOUT AUTHORIZATION FROM TOROMONT ENERGY SYSTEMS.

PLOT DATE January 07, 2011 C:\Users\bmclean.TES\appdata\local\temp\AcPublish_1860\31834-111-ASBUILT.dwg

P-0506
FRESH OIL TRANSFER PUMP
MFG: YAMADA
GPM: 21
DRIVE: PNEUMATIC

P-0508
ENGINE LUBE OIL PUMP
MFG: WAUKESHA
DRIVE: ENGINE

P-0505
ENGINE PRE-LUBE OIL PUMP
MFG: YAMADA
GPM: 3.4
DRIVE: PNEUMATIC

T-0502
COMPRESSOR/ENGINE OIL DAYTANK
MFG: EFX
SIZE: 12'x8'x1/4" HSS-18' 11"L
MAT'L: SA-36
CAPACITY: 300L

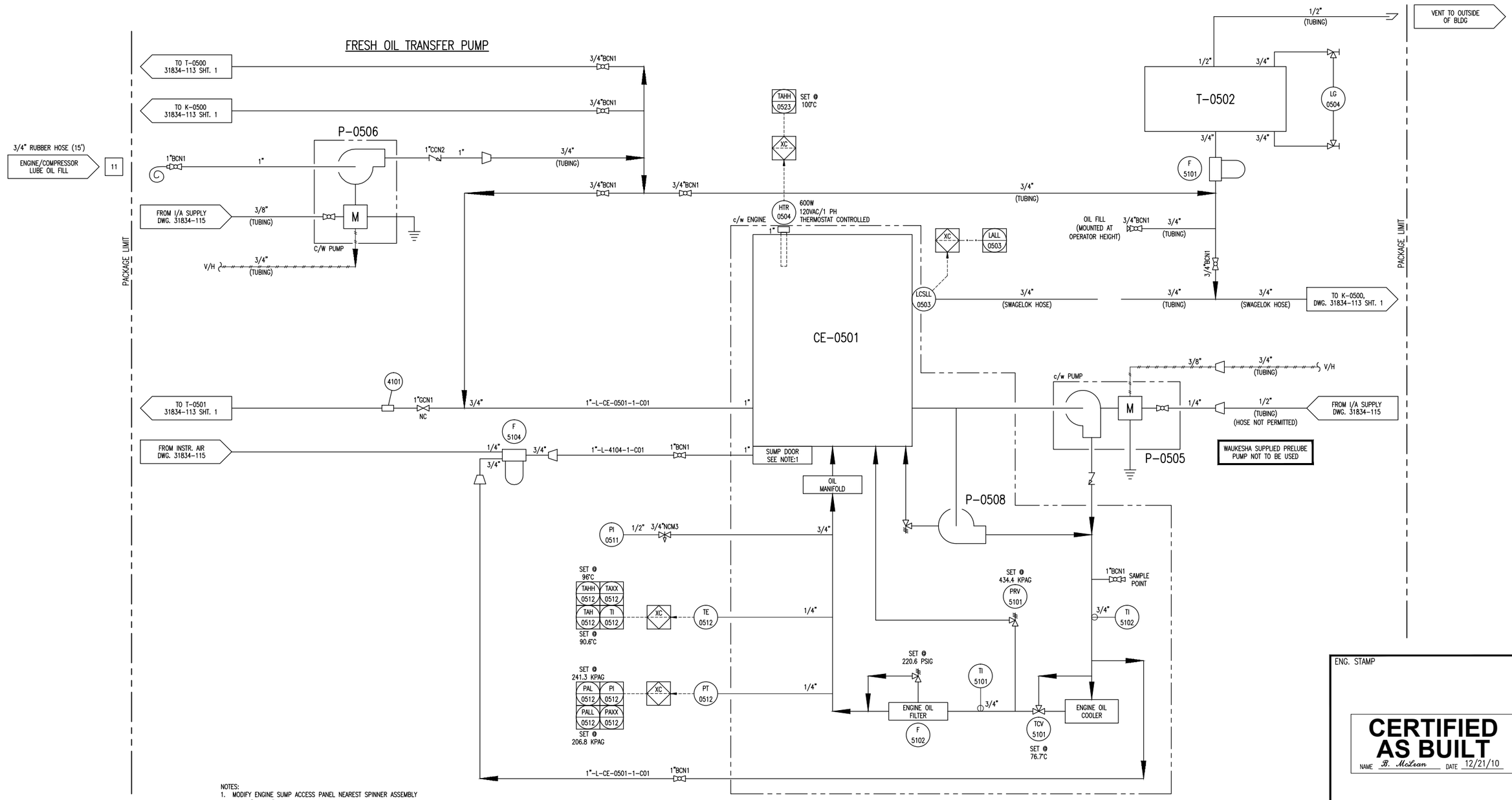

NOTES:
1. MODIFY ENGINE SUMP ACCESS PANEL NEAREST SPINNER ASSEMBLY WITH 1"-3000# COUPLING. INSTALL ABOVE OIL LEVEL.

ENG. STAMP

CERTIFIED AS BUILT
NAME B. McLean DATE 12/21/10

PERMIT TO PRACTISE APEGGA PERMIT: No. P8651

REV	DESCRIPTION	DATE	BY	APR
4	AS BUILT	12/21/10	JH	KG
3	FOR REGISTRATION	11/22/10	JH	KG
2	REVISED AS PER CUSTOMER MARK UP	09/16/10	JH	KG
1	ISSUED FOR FABRICATION	06/25/10	BM	DC
A	ISSUED FOR APPROVAL	06/04/10	CE	DC

DATE 06/04/10 SCALE NTS
DRAWN BY C. CASTROPE CHECKED BY K. GREEN APPROVED BY B. CAMPBELL
CUST PO N/A
STEP CODE 198 511 591

FOR HUSKY OIL OPERATIONS LTD.
WAUKESHA F18GL
ARIEL JGJ/2-1/2 STD

ENERFLEX
10121 - BARLOW TRAIL N.E.
CALGARY ALBERTA CANADA

TITLE P & I DIAGRAM
ENGINE LUBE OIL

DWG NO 31834-114 SHT 1 REV 4

THE INFORMATION CONTAINED HEREIN IS THE CONFIDENTIAL PROPERTY OF TOROMONT ENERGY SYSTEMS AND IS NOT FOR PUBLICATION, AND NO PART THEREOF SHALL BE COPIED OR COMMUNICATED TO A THIRD PARTY WITHOUT AUTHORIZATION FROM TOROMONT ENERGY SYSTEMS.

PLOT DATE January 07, 2011 C:\Users\bmclean.TES\appdata\local\temp\AcPublish_1860\31834-111-ASBUILT.dwg

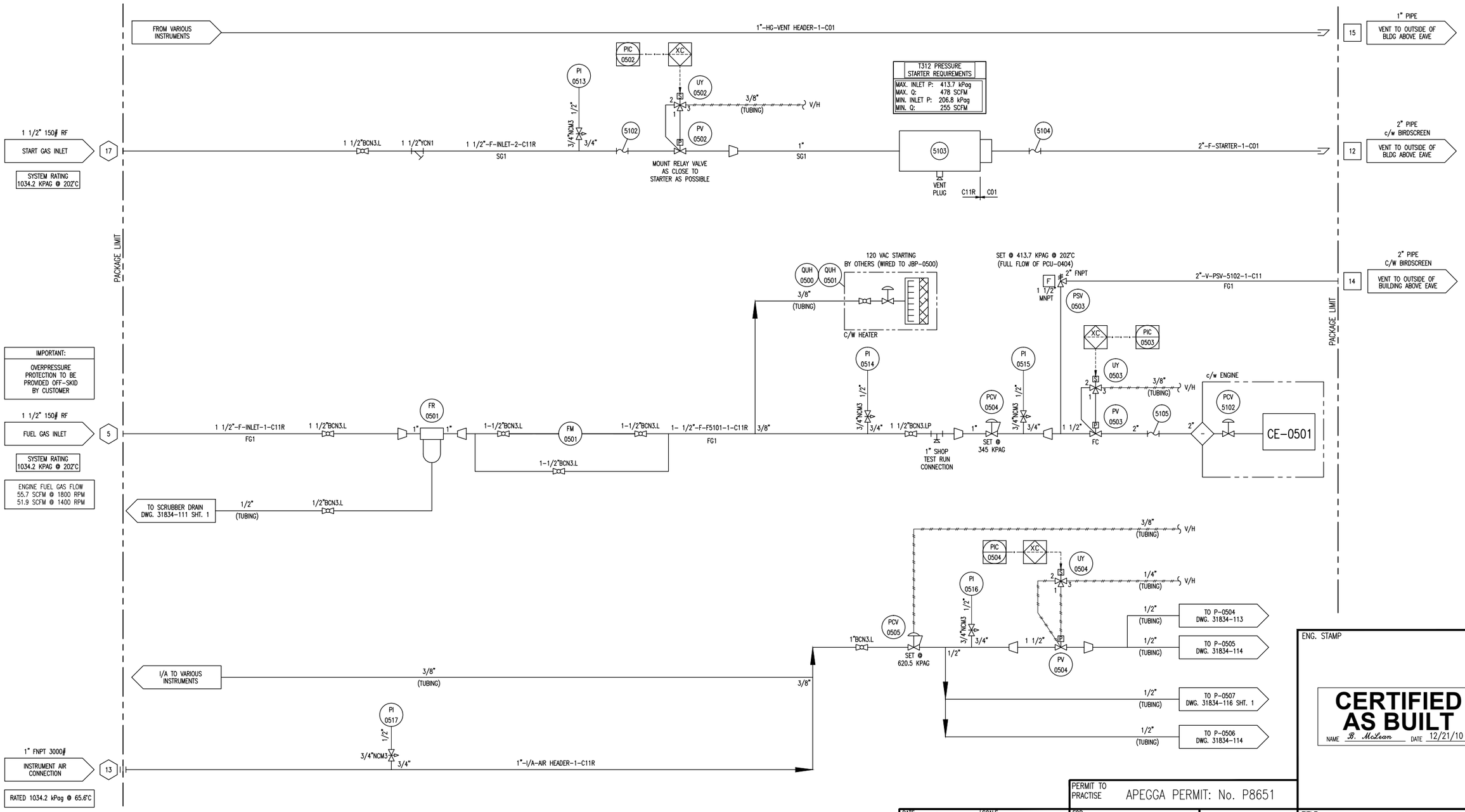

REV	DESCRIPTION	DATE	BY	APR
3	AS BUILT	12/21/10	JH	KC
2	FOR REGISTRATION	11/22/10	JH	KC
1	ISSUED FOR FABRICATION	06/25/10	BM	DC
A	ISSUED FOR APPROVAL	06/04/10	CE	DC

DATE 06/04/10 | SCALE NTS
DRAWN BY C. EASTHOPE | CHECKED BY K. GREEN | APPROVED BY B. CAMPBELL
CUST PO N/A
STEP CODE 198 511 591

PERMIT TO PRACTISE APEGGA PERMIT: No. P8651

FOR HUSKY OIL OPERATIONS LTD.
WAUKESHA F18GL
ARIEL JGJ/2-1/2 STD

ENERFLEX
10121 - BARLOW TRAIL N.E.
CALGARY ALBERTA CANADA

TITLE P & I DIAGRAM
START / FUEL GAS SUPPLY

DWG NO 31834-115 | SHT 1 | REV 3

ENG. STAMP
CERTIFIED AS BUILT
NAME B. McLean DATE 12/21/10

THE INFORMATION CONTAINED HEREIN IS THE CONFIDENTIAL PROPERTY OF TOROMONT ENERGY SYSTEMS AND IS NOT FOR PUBLICATION, AND NO PART THEREOF SHALL BE COPIED OR COMMUNICATED TO A THIRD PARTY WITHOUT AUTHORIZATION FROM TOROMONT ENERGY SYSTEMS.

PLOT DATE January 07, 2011 C:\Users\bmclean.TES\appdata\local\temp\AcPublish_1860\31834-111-ASBUILT.dwg

T-0503
WASTE GLYCOL TANK
MFG: EFX
SIZE: 12'x8'x1/4" HSS-19'-11"L
MAT'L: SA-36
CAPACITY: 330L

P-0507
GLYCOL TRANSFER PUMP
MFG: YAMADA
GPM: 49
DRIVE: PNEUMATIC

P-0502
ENGINE JACKET WATER PUMP
MFG: WAUKESHA
MAX. FLOW: 130 GPM
DRIVE: ENGINE

T-0504
GLYCOL (EJW) SURGE TANK
MFG: EFX
CAPACITY: 53L
SIZE: 10"TUBING x 60"LG
MAT'L: SA-36

EJW
ENGINE JACKET WATER COOLER SECTION
MAWP: 96.5 KPAG @ 149°C
NON-CODE VESSEL

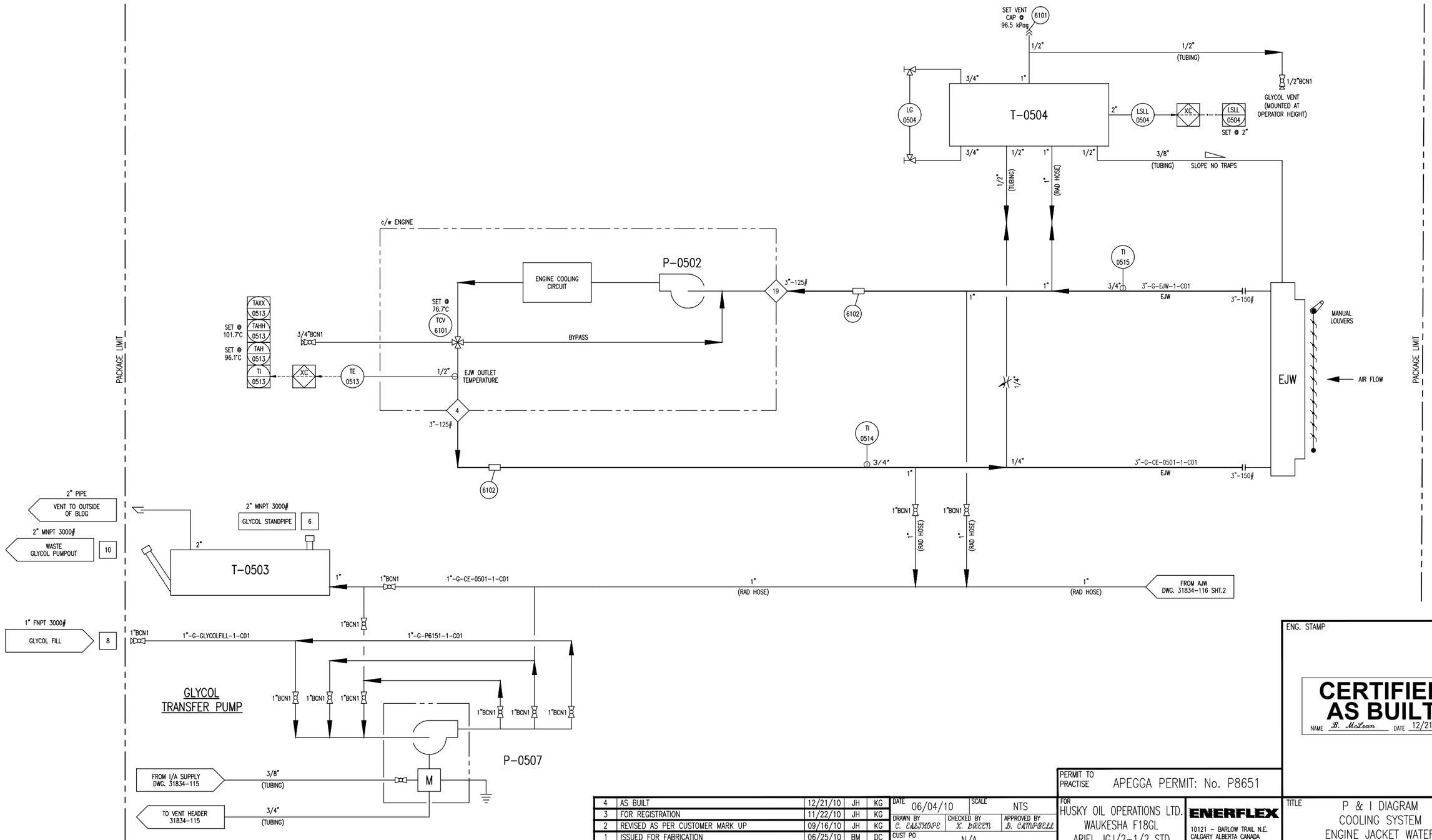

ENG. STAMP

CERTIFIED AS BUILT
NAME B. McLean DATE 12/21/10

PERMIT TO PRACTISE APEGGA PERMIT: No. P8651

REV	DESCRIPTION	DATE	BY	APR
4	AS BUILT	12/21/10	JH	KG
3	FOR REGISTRATION	11/22/10	JH	KG
2	REVISED AS PER CUSTOMER MARK UP	09/16/10	JH	KG
1	ISSUED FOR FABRICATION	06/25/10	BM	DC
A	ISSUED FOR APPROVAL	06/04/10	CE	DC

DATE 06/04/10 | SCALE NTS
DRAWN BY C. EASTHOPE | CHECKED BY K. GREEN | APPROVED BY B. CAMPBELL
CUST PO N/A
STEP CODE 198 511 531 591

FOR HUSKY OIL OPERATIONS LTD.
WAUKESHA F18GL
ARIEL JGJ/2-1/2 STD

ENERFLEX
10121 - BARLOW TRAIL N.E.
CALGARY ALBERTA CANADA

TITLE P & I DIAGRAM
COOLING SYSTEM
ENGINE JACKET WATER

DWG NO 31834-116 | SHT 1 | REV 4

THE INFORMATION CONTAINED HEREIN IS THE CONFIDENTIAL PROPERTY OF TOROMONT ENERGY SYSTEMS AND IS NOT FOR PUBLICATION, AND NO PART THEREOF SHALL BE COPIED OR COMMUNICATED TO A THIRD PARTY WITHOUT AUTHORIZATION FROM TOROMONT ENERGY SYSTEMS.

PLOT DATE January 07, 2011 C:\Users\bmclean.TES\appdata\local\temp\Acpublish_1860\31834-111-ASBUILT.dwg

E-0501
COMPRESSOR FRAME OIL COOLER
MFG: ARIEL
MODEL: B-1962
DWG #: A-4154

P-0503
AUXILIARY JACKET WATER PUMP
MFG: WAUKESHA
MAX. FLOW: 35 GPM
DRIVE: ENGINE

T-0505
GLYCOL (AJW) SURGE TANK
MFG: EFX
CAPACITY: 27L
SIZE: 10"TUBING x 60"LG
MAT'L: SA-36

AJW
AUXILIARY JACKET WATER COOLER SECTION
MAWP: 96.5 KPAG @ 149°C
NON-CODE VESSEL

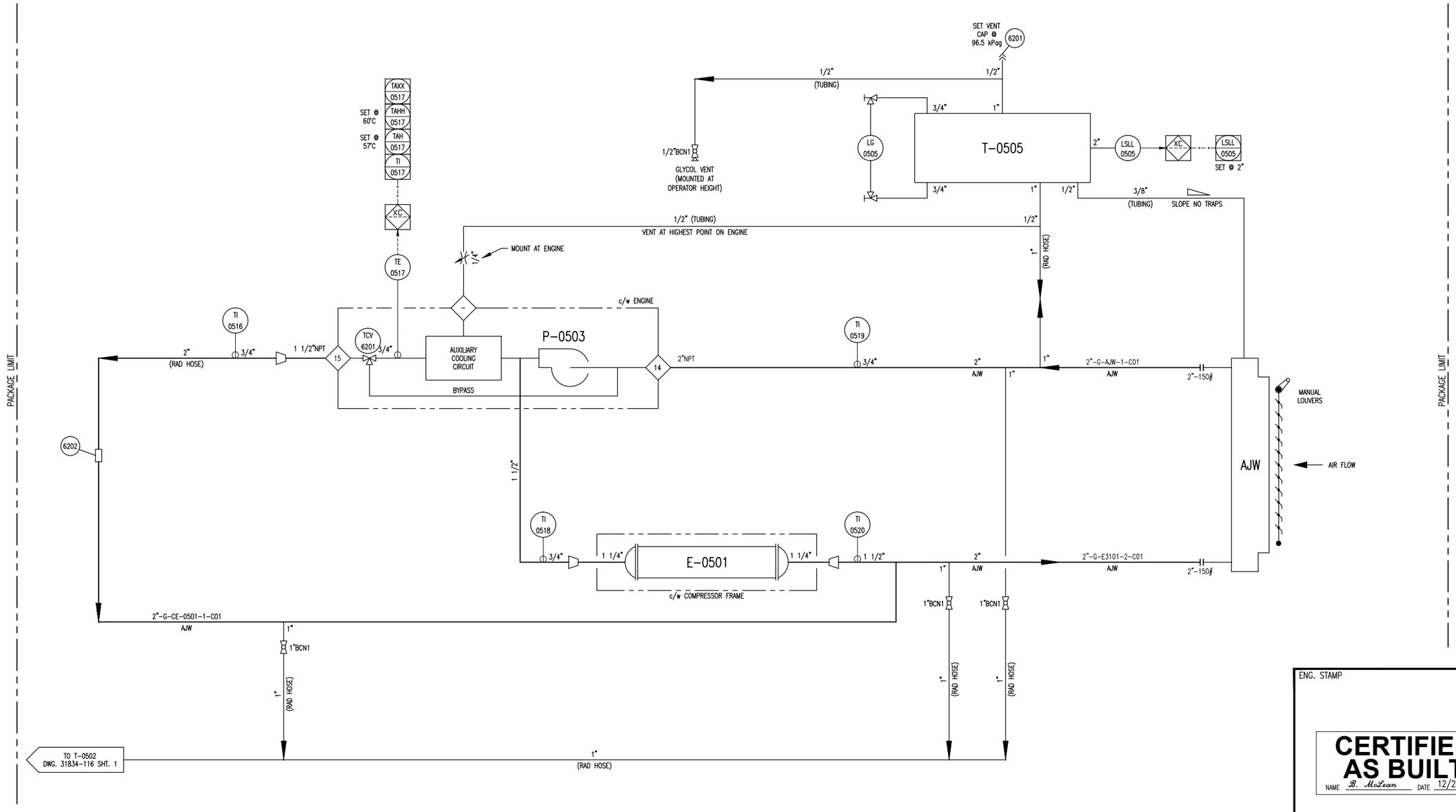

ENG. STAMP

CERTIFIED AS BUILT
NAME B. McLean DATE 12/21/10

PERMIT TO PRACTISE APEGGA PERMIT: No. P8651

REV	DESCRIPTION	DATE	BY	APR
4	AS BUILT	12/21/10	JH	KG
3	FOR REGISTRATION	11/22/10	JH	KG
2	REVISED AS PER CUSTOMER MARK UP	09/16/10	JH	KG
1	ISSUED FOR FABRICATION	06/25/10	BM	DC
A	ISSUED FOR APPROVAL	06/04/10	CE	DC

DATE 06/04/10 SCALE NTS
DRAWN BY C. EASTHOPE CHECKED BY K. GREEN APPROVED BY B. CAMPBELL
CUST PO N/A
STEP CODE 198 511 531 591

FOR HUSKY OIL OPERATIONS LTD.
WAUKESHA F18GL
ARIEL JGJ/2-1/2 STD

ENERFLEX
10121 – BARLOW TRAIL N.E.
CALGARY ALBERTA CANADA

TITLE P & I DIAGRAM
COOLING SYSTEM
AUXILIARY JACKET WATER

DWG NO 31834-116 SHT 2 REV 4

THE INFORMATION CONTAINED HEREIN IS THE CONFIDENTIAL PROPERTY OF TOROMONT ENERGY SYSTEMS AND IS NOT FOR PUBLICATION, AND NO PART THEREOF SHALL BE COPIED OR COMMUNICATED TO A THIRD PARTY WITHOUT AUTHORIZATION FROM TOROMONT ENERGY SYSTEMS.

PLOT DATE January 07, 2011 C:\Users\bmcclean\TES\appdata\local\temp\AcPublish_1860\31834-111-ASBUILT.dwg

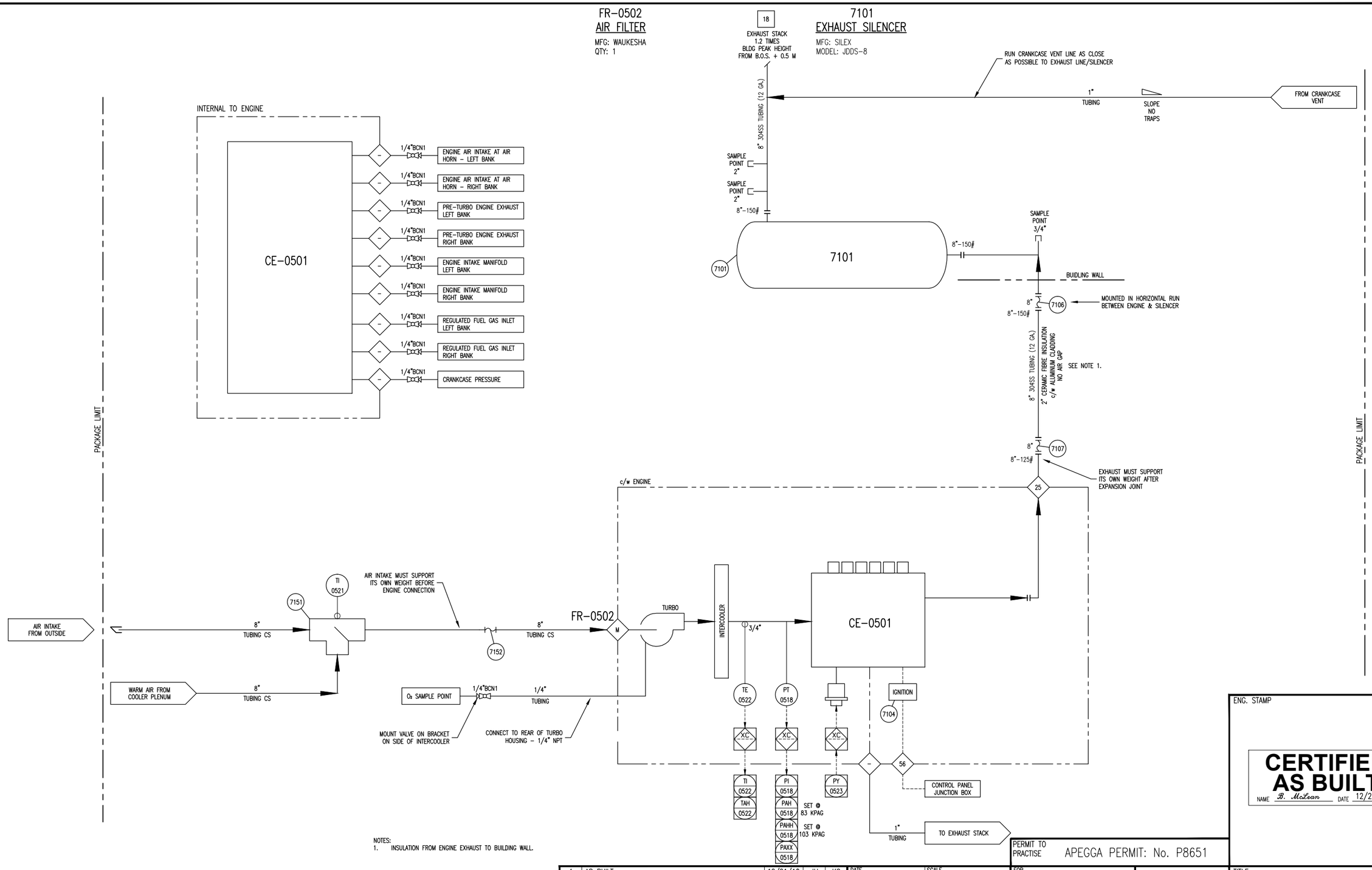

NOTES:
1. INSULATION FROM ENGINE EXHAUST TO BUILDING WALL.

REV	DESCRIPTION	DATE	BY	APR
4	AS BUILT	12/21/10	JH	KG
3	FOR REGISTRATION	11/22/10	JH	KG
2	REVISED AS PER CUSTOMER MARK UP	09/16/10	JH	KG
1	ISSUED FOR FABRICATION	06/25/10	BM	DC
A	ISSUED FOR APPROVAL	06/04/10	CE	DC

DATE 06/04/10 | SCALE NTS
DRAWN BY C. EASTHOPE | CHECKED BY K. GREEN | APPROVED BY D. CAMPBELL
CUST PO N/A
STEP CODE 198 511 531 591

PERMIT TO PRACTISE APEGGA PERMIT: No. P8651

FOR HUSKY OIL OPERATIONS LTD.
WAUKESHA F18GL
ARIEL JGJ/2-1/2 STD

ENERFLEX
10121 - BARLOW TRAIL N.E.
CALGARY ALBERTA CANADA

TITLE P & I DIAGRAM
AIR / EXHAUST SYSTEMS

DWG NO 31834-117 | SHT 1 | REV 4

ENG. STAMP
CERTIFIED AS BUILT
NAME B. McLean DATE 12/21/10

THE INFORMATION CONTAINED HEREIN IS THE CONFIDENTIAL PROPERTY OF TORQMONT ENERGY SYSTEMS AND IS NOT FOR PUBLICATION, AND NO PART THEREOF SHALL BE COPIED OR COMMUNICATED TO A THIRD PARTY WITHOUT AUTHORIZATION FROM TORQMONT ENERGY SYSTEMS.

C:\Users\jmclean.TES\appdata\local\temp\AcPublish_1860\31834-111-ASBUILT.dwg
PLOT DATE January 07, 2011

LINE IDENTIFICATION

A–B–CD–E–FGHI–J,J,J

A: NOMINAL LINE SIZE IN INCHES

B: FLUID

A	AMMONIA	L	LUBE OIL
C	CARBON DIOXIDE	N	NATURAL GAS
CO	CARBON MONOXIDE	O	OXYGEN
F	FUEL GAS	P	PROPANE
G	GLYCOL	PG	PURGE GAS
HG	HYDROCARBON GAS	S	STEAM
HL	HYDROCARBON LIQUID	SG	SYNGAS
IA	INSTR. AIR SUPPLY	V	WASTE PROCESS WATER
IG	INSTR. GAS SUPPLY	W	WATER

C: EQUIPMENT TYPE

AC	AFTER COOLER	IC	INTERSTAGE COOLER
B	BLOWER/FAN	M	MOTOR
C	COMPRESSOR	P	PUMP
E	EXCHANGER	S	OIL SKIMMER
F	FILTER	T	TANK
H	HEATER	V	PRESSURE VESSEL

D: EQUIPMENT NUMBER 1 TO 9 SEQUENTIAL NUMBERS

E: LINE NUMBER 1 TO 9 SEQUENTIAL NUMBERS FROM EQUIPMENT

FGHI: PIPING SPECIFICATION

F: MATERIAL GROUP
- C CARBON STEEL
- L LOW TEMPERATURE CARBON STEEL
- S STAINLESS STEEL

G: FLANGE CLASS (ANSI 16.5)

1	150#	9	900#
3	300#	15	1500#
6	600#	25	2500#

H: LINE MATERIAL SPECIFICATION REFERENCE
1 TO 9 SEQUENTIAL NUMBERS

I: SPECIFICATION REFERENCE
- R RECIPROCATING SPECIFICATION
- BLANK SCREW SPECIFICATION

JJJ: MODIFIER / GENERAL

H	HOT INSULATION	THICKNESS IN INCHES
C	COLD INSULATION	THICKNESS IN INCHES
PP	PERSONAL PROTECTION	THICKNESS IN INCHES
HT	HEAT TRACING	
ST	STEAM TRACING	
GT	GLYCOL TRACING	
ET	ELECTICAL TRACING	

EXAMPLE: 3"–A–V401–2–C11R–ET,1"

3"	LINE–SIZE
A	AMMONIA
V401	OIL SEPARATOR
2	SECOND LINE FROM VESSSEL
C11R	C CARBON STEEL LINE
	1 150# ANSI FLANGE RATING
	1 LINE MATERIAL SPECIFICATION REFERENCE
	R RECIPROCATING SPECIFICATION REFERENCE
ET,1"	ELECTRICAL TRACING, 1" THICK INSULATION

VALVE IDENTIFICATION

A"BCDE.F

A: NOMINAL VALVE SIZE IN INCHES

B: TYPE

A	ANGLE GLOBE	M	MANIFOLD
B	BALL	N	NEEDLE
C	CHECK	P	PLUG
G	GATE	S	STRAINER
L	GLOBE	U	BUTTERFLY

C: BODY MATERIAL

B	BRONZE	L	LOW TEMP. CARBON STEEL
C	CARBON STEEL	S	STAINLESS STEEL
I	CAST IRON		

D: END CONNECTIONS

		B	BUT WELD
1	FLANGED 150#	C	SW BY NPT
3	FLANGED 300#	F	NPT BY FLANGE MANIFOLD)
6	FLANGED 600#	N	NPT (SCREWED)
9	FLANGED 900#	M	NPT MALE BY NPT FEMALE
15	FLANGED1500#	S	SW (SOCKETWELD)
25	FLANGED 2500#	T	TUBE (SWAGELOCK)

E: IDENTIFIER – NUMBER USED TO SPECIFY VALVE
REFER TO VALVE DATA SHEETS

F: MODIFIER

C	CHAIN OPERATOR	O	OXYGEN SERVICE/CLEANING
E	EXTENDED BONNET	P	FULL PORT DESIGN
G	GEAR OPERATOR	R	RTJ FLANGED
L	LOCKING DEVICE	S	SPRING HANDLE (CLOSE)
N	NACE TRIM	X	SPECIAL SPECIFICATIONS

EXAMPLE: 6"GC11.C

6"	VALVE SIZE	C	CARBON STEEL	1	API–600
G	GATE	1	FLANGED 150#	C	CHAIN OPERATOR

LINE CODE

- MAIN PROCESS LINE
- SECONDARY PROCESS LINE
- AUXILIARY LINE
- INSTRUMENT LINE
- ELECTRIC LINE
- FILLED CAPILLARY TUBE
- PNEUMATIC LINE
- MECHANICAL LINK
- INSTRUMENT DATA LINK
- INTERCONNECTING PIPING
- SKID LIMIT
- FUTURE

VALVES

- ANGLE GLOBE VALVE
- BALL VALVE
- BUTTERFLY VALVE
- CHECK VALVE
- GATE VALVE
- GLOBE VALVE
- NEEDLE VALVE
- NEEDLE VALVE W/ BLEED PLUG
- PLUG VALVE
- 3–WAY VALVE
- 4–WAY VALVE

CONTROL VALVES

- POSITIONER DIAPHRAGM CONTROL VALVE
- OUTLET PRESSURE REGULATOR SELF–CONTAINED (FLOW)
- INLET PRESSURE REGULATOR SELF–CONTAINED (FLOW)
- PRESSURE DIFFERENTIAL CONTROL VALVE SELF–CONTAINED
- DIAPHRAGM CONTROL VALVE
- HYDRAULIC / PNEUMATIC PISTON OPERATED
- PNEUMATIC RELAY VALVE
- TWO–WAY SOLENOID VALVE
- THREE–WAY SOLENOID VALVE
- MOTOR ACTUATOR
- HAND CONTROL VALVE
- PRESSURE SAFETY / RELIEF VALVE
- X – DESIGNATES ORIFICE LETTER (SIZE)

MISCELLANEOUS

- SKID TIE–POINTS
- SKID CONNECTION NOT REQUIRING CUSTOMER TIE IN
- FLEXIBLE/ EXPANSION CONNECTION
- SPECTACLE BLIND (LINE OPEN)
- SPECTACLE BLIND (LINE CLOSED)
- BALL CHECK VALVE
- THROTTLE BLOCK
- BOTTLE CLAMP
- SPACER / ORIFICE
- CONE STRAINER
- BASKET STRAINER
- Y–PATTERN STRAINER
- TEE STRAINER
- OPEN DRAIN
- SPECIAL CLAMPING
- WEDGE SUPPORT
- UNION
- SIGHT GLASS
- LINE SIZE CHANGE
- SP 0000 – SPECIALTY ITEM
- THICKNESS – IN C – INSULATION – (C) COLD, (H) HOT, (HT) HEAT TRACING, (PP) PERSONNEL PROTECTION
- IN C – ELECTRIC HEAT TRACE
- IN C – STEAM OR GLYCOL HEAT TRACE
- VORTEX BREAKER
- DIAPHRAGM SEAL
- RUPTURE DISC FOR PRESSURE RELIEF
- RUPTURE DISC FOR VACUUM RELIEF

INSTRUMENT IDENTIFICATION GENERAL REFERENCE (ISA – S5.1)

	(MODIFIER)													
	FIRST LETTER	SUCCEEDING LETTERS	PRIMARY ELEMENT	INDICATOR	RECORDER	CONTROLLER BLIND	CONTROLLER INDICATING	CONTROLLER RECORDING	TRANS–MITTER	CONTROL SWITCH	CONTROL ALARM	CONTROL VALVE OR REGULATOR	SELF–ACTUATED VALVE	RELAY OR CONVERTER
A	ANALYSIS	ALARM	AE	AI	AR	AC	AIC	ARC	AT	AS( )	AA( )	AV		AY
B	BURNER FLAME	USER'S CHOICE	BE	BI	BR	BC			BT	BS( )	BA( )	BV		BY
C	CONDUCTIVITY	CONTROL (CLOSE)	CE	CI	CR	CC	CIC	CRC	CT	CS( )	CA( )	CV		CY
D	DENSITY OR MASS (DIFFERENTIAL)		DE	DI	DR	DC	DIC	DRC	DT	DS( )	DA( )	DV		DY
E	VOLTAGE	PRIMARY ELEMENT	EE	EI	ER	EC	EIC	ERC	ET	ES( )	EA)	EV		EY
F	FLOW (RATIO OR FRACTION)	SHUTDOWN FIRST OUT	FE	FI	FR	FC	FIC	FRC	FT	FS( )	FA)	FV	FCV	FY
G	GAUGING	GLASS	GE	GI	GR	GC	GIC	GRC	GT	GS( )	GA)	GV		
H	HAND	(HIGH)				HC	HIC		HT	HS( )		HV	HCV	HY
I	CURRENT	INDICATE	IE	II	IR	IC	IIC	IRC	IT	IS( )	IA( )			IY
J	POWER (SCAN)		JE	JI	JR	JC	JIC	JRC	JT	JS( )	JA( )			JY
K	TIME	CONTROL STATION		KI	KR	KC	KIC	KRC	KT	KS( )	KA( )			KY
L	LEVEL	LIGHT (LOW)	LE	LI	LR	LC	LIC	LRC	LT	LS( )	LA( )	LV	LCV	LY
M	MOISTURE, HUMIDITY	(MIDDLE OR INTERMEDIATE)	ME	MI	MR	MC	MIC	MRC	MT	MS( )	MA( )	MV		MY
N	USER'S CHOICE													
O	POINT	ORIFICE (OPEN)												
P	PRESSURE OR VACUUM	POINT	PE	PI	PR	PC	PIC	PRC	PT	PS( )	PA( )	PV	PCV	PY
Q	QUANTITY OR EVENT (INTEGRATE/TOTALIZE)			QI	QR	QC	QIC	QRC	QT	QS( )	QA( )	QV		QY
R	RADIOACTIVITY	RECORD OR PRINT	RE	RI	RR	RC	RIC	RRC	RT	RS( )	RA( )			RY
S	SPEED OR FREQUENCY	SWITCH		SI	SR	SC	SIC	SRC	ST	SS( )	SA)			SY
T	TEMPERATURE	TRANSMIT	TE	TI	TR	TC	TIC	TRC	TT	TS( )	TA( )	TV	TCV	TY
U	MULTI–VARIABLE	MULTI–FUNCTION		UI	UR	UC	UIC	URC				UV		
V	VISCOSITY OR VIBRATION	VALVE OR DAMPER	VE	VI	VR	VC	VIC	VRC	VT	VS( )	AA( )	VV		VY
W	WEIGHT OR FORCE	WELL	WE	WI	WR	WC	WIC	WRC	WT	WS( )	AA( )	WV		WY
X	UNCLASSIFIED	UNCLASSIFIED (DIAGNOSTIC)	XE	XI	XR	XC	XIC	XRC	XT	XS( )	SA( )	XV		XY
Y	USER'S CHOICE	RELAY OR COMPUTE												YY
Z	POSITION	DRIVE OR ACTUATE	ZE	ZI	ZR	ZC	ZIC	ZRC	ZT	ZS( )	ZA( )			ZY

(C) –CLOSE
(H) –HIGH ALARM
(HH)–HIGH SHUTDOWN
(O) –OPEN
(L) –LOW ALARM
(LL)–LOW SHUTDOWN

(XX) –DIAGNOSTIC SHUTDOWN (USED TO INDICATE THE DIAGNOSTIC CHECK REQ'D ON THE ANALOG INPUT)

VALVE CONNECTIONS

- SCREWED (NPT)
- FLANGED
- SOCKET WELDED (SW)
- NPT BY SW
- BUTT WELDED (BW)

INSTRUMENTS

- LOCAL MOUNTED
- LOCAL PANEL MOUNTED
- MOUNTED BEHIND OR IN LOCAL PANEL
- MAIN PANEL MOUNTED
- MOUNTED BEHIND OR IN MAIN PANEL
- BY OTHERS
- HUMAN MACHINE INTERFACE(HMI) ACCESSIBLE TO OPERATOR
- HUMAN MACHINE INTERFACE(HMI) ACCESSIBLE TO OPERATOR THROUGH LOCAL PLC
- BY OTHERS
- XC – PROGRAMMABLE LOGIC CONTROLLER (PLC) XC REPRESENTS GENERAL LOGIC
- XL* – PILOT LIGHT * COLOR–(A) AMBER, (G) GREEN, (R) RED, (B) BLUE, (O) ORANGE, (W) WHITE
- I – INTERLOCK
- E – ELECTRICAL (HARD WIRE) INTERLOCK
- THERMOWELL (FLANGED)
- THERMOWELL (THREADED)
- THERMOWELL (WELDED)

ABBREVIATIONS

BW	BUTT WELD	NC	NORMALLY CLOSED
CA	CORROSION ALLOWANCE	NO	NORMALLY OPEN
CS	CARBON STEEL	NPT	NATIONAL PIPE THREAD (SCREWED)
C/W	COMPLETE WITH	PB	PUSH BUTTON
CSC	CAR SEALED CLOSED	PL	PILOT LIGHT
CSO	CAR SEALED OPEN	PLC	PROGRAMMABLE LOGIC CONTROLLER
CUST	CUSTOMER	REV	REVERSE ACTING
DB	DEAD BAND	RF	RAISED FACE
Δ	DELTA (DIFFERENTIAL)	RTD	RESISTANCE TEMPERATURE DEVICE
DIR	DIRECT ACTING	RTJ	RING TYPE JOINT
ESD	EMERGENCY SHUTDOWN	S/F	SEAM TO FACE OF FLANGE
FC	FAIL CLOSED	SS	STAINLESS STEEL
FF	FLAT FACED	S/S	SEAM TO SEAM
FO	FAIL OPEN	SO	SLIP–ON
FLP	FAIL LAST POSITION	SW	SOCKET WELD
FX	FROST EXTENSION	SVU	SUCTION VALVE UNLOADER
FOT	FLAT ON TOP	T	TUBING
HI	HIGH	TESI	TOROMONT ENERGY SYSTEMS INC.
HLL	HIGH LIQUID LEVEL	V/H	VENT HEADER
HS	HAND SWITCH	VTA	VENT TO ATMOSHPERE
I/A	INSTRUMENT AIR	VVCP	VARIABLE VOLUME CONTROL POCKET
I/G	INSTRUMENT GAS	FVCP	FIXED VOLUME CONTROL POCKET
I/P	CURRENT TO PRESSURE	W/	WITH
I/O	INPUT / OUTPUT	W/O	WITHOUT
LLL	LOW LIQUID LEVEL		
LPD	LOW POINT DRAIN		
MAX	MAXIMUM		
MAWP	MAXIMUM ALLOWABLE WORKING PRESSURE		
MDMT	MAXIMUM DESIGN METAL TEMPERATURE		
MCC	MOTOR CONTROL CENTER		
MIN	MINIMUM		
NLL	NORMAL LIQUID LEVEL		

ENG. STAMP

CERTIFIED AS BUILT
NAME B. McLean DATE 12/21/10

REV	DESCRIPTION	DATE	BY	APR
1	ISSUED FOR FABRICATION	06/25/10	BM	DC
A	ISSUED FOR REFERENCE	XX/XX/XX	BY–R	APR–R

PERMIT TO PRACTISE APEGGA PERMIT: No. P8651

DATE XX/XX/XX | SCALE NTS
DRAWN BY Designer | CHECKED BY Engineer–C | APPROVED BY Engineer–A
CUST PO N/A
STEP CODE

FOR HUSKY OIL OPERATIONS LTD.
WAUKESHA F18GL
ARIEL JGJ/2–1/2 STD

ENERFLEX
10121 – BARLOW TRAIL N.E.
CALGARY ALBERTA CANADA

TITLE LEGEND

DWG NO 31834–199 | SHT 1 | REV 1

THE INFORMATION CONTAINED HEREIN IS THE CONFIDENTIAL PROPERTY OF TOROMONT ENERGY SYSTEMS AND IS NOT FOR PUBLICATION, AND NO PART THEREOF SHALL BE COPIED OR COMMUNICATED TO A THIRD PARTY WITHOUT AUTHORIZATION FROM TOROMONT ENERGY SYSTEMS.

C:\Users\bmclean.TES\appdata\local\temp\AcPublish_1860\31834-111-ASBUILT.dwg
PLOT DATE January 07, 2011

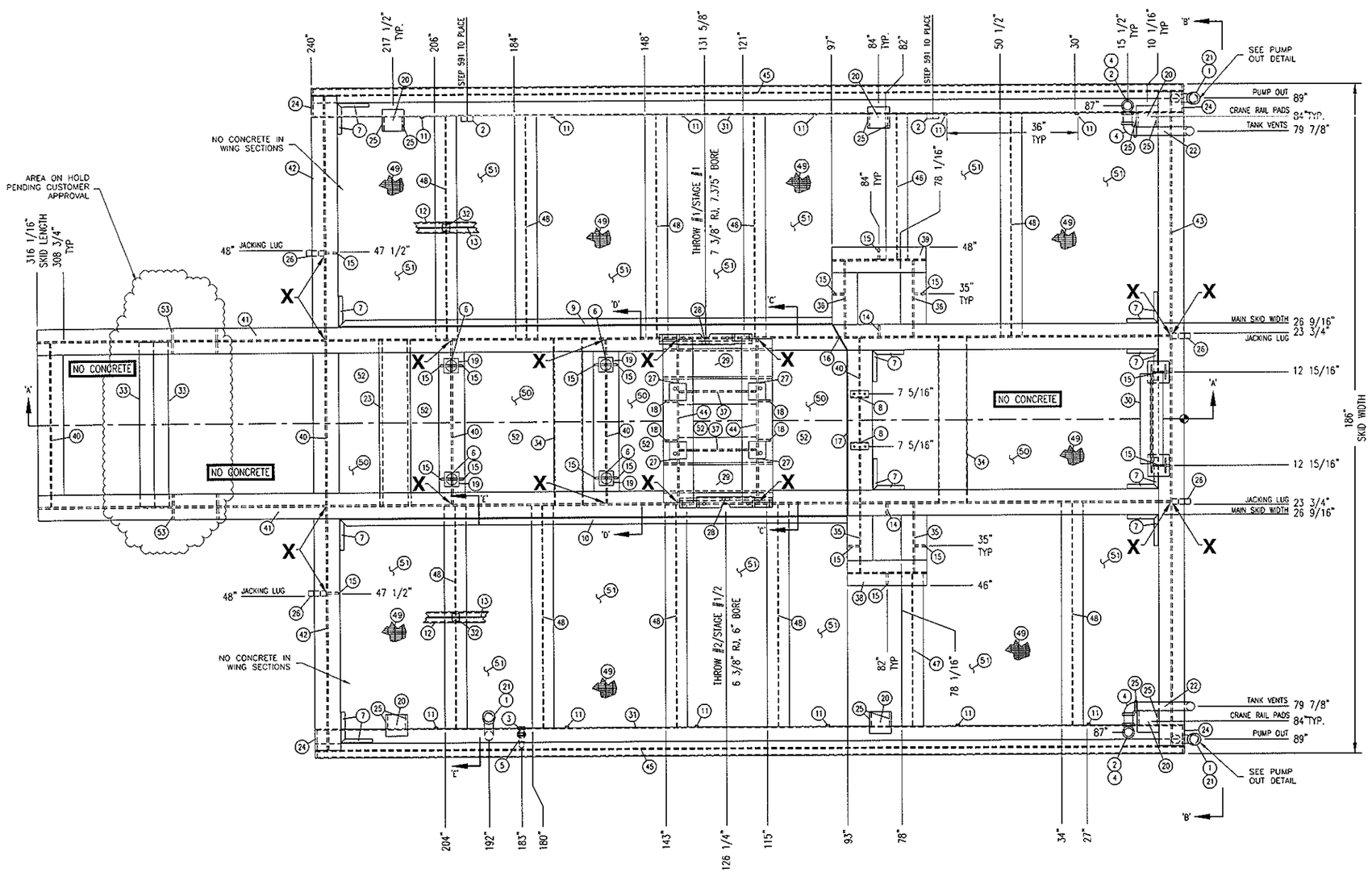

PLAN VIEW

BILL OF MATERIAL

MK	QTY	DESCRIPTION	MAT.	LENGTH	PART_NUMBER
1	3	CAP,2",3000#,NPT	SA-105	-	115-HRB-0200
2	4	COUPLING,2",3000#,NPT,HALF	SA-105	-	123-HRB-0200
3	1	ELBOW,1",3000#,450,NPT	SA-105	-	142-HRB-0100
4	4	ELBOW,2",3000#,900,NPT	SA-105	-	146-HRB-0200
5	1	PIPE,1",XS,SMLS,TOE×POE (CUT TO SUIT)	SA-106-B	4	600-HPA-0100
6	4	VIBRACON SM16 ADJUSTABLE CHOCK		-	NPN
7	1	ANGLE,1-1/4" X 1-1/4",3/16" THK	G40.2144W	900	005-HA-0125-0125-0018
8	2	ANGLE,2" X 2",1/4" THK	G40.2144W	5	005-HA-0200-0200-0025
9	1	ANGLE,2" X 2",1/4" THK	G40.2144W	135 15/16	005-HA-0200-0200-0025
10	1	ANGLE,2" X 2",1/4" THK	G40.2144W	139 15/16	005-HA-0200-0200-0025
11	12	CHANNEL,1" X 0.83#	G40.2144W	8	018-HA-0100-0008
12	2	CHANNEL,3" X 4.1#	G40.2144W	225 7/8	018-HA-0300-0041
13	2	FLAT BAR,1" X 1/4" THK	G40.2144W	225 7/8	010-HA-0100-0025
14	2	FLAT BAR,3" X 1/2" THK	G40.2144W	4 1/2	010-HA-0300-0050
15	18	FLAT BAR,3" X 1/2" THK	G40.2144W	15	010-HA-0300-0050
16	1	FLAT BAR,3/4" X 1/4" THK	G40.2144W	8 1/8	010-HA-0075-0025
17	1	FLAT BAR,3/4" X 1/4" THK	G40.2144W	46	010-HA-0075-0025
18	4	FLAT BAR,3-1/2" X 1/2" THK	G40.2144W	19 3/4	010-HA-0350-0050
19	4	MOUNTING BLOCK 4"SQUARE.x 2"t, C1018 COLD ROLLED, FLAT BAR(SEE DWG. EMB-H24-F18 REV.0)	C1018	4	NPN
20	6	FLAT BAR,6" X 1/2" THK	G40.2144W	6	010-HA-0600-0050
21	3	PIPE,2",S/80(XS),ERW	SA-106-B	15	602-HPB-0200
22	1	PIPE,2",S/80(XS),ERW	SA-106-B	48	602-HPB-0200
23	1	PIPE,8",XXS,SMLS	SA-106-B	46 3/8	600-PPA-0800
24	4	PLATE,1/2",SMOOTH X 1' X 8"	G40.2144W	12	040-HA-0050
25	12	PLATE,1/2",SMOOTH X 7 3/16" X 3 5/16"(ONE CUTS TWO)	G40.2144W	7 3/16	040-HA-0050
26	4	PLATE,1-1/2",SMOOTH X 1' X 5" (SEE DWG.# LIFT LUG REV.0)	G40.2144W	12	040-HA-0150
27	4	MOUNTING BLOCK 4 3/4"SQUARE.x 2"t, C1018 COLD ROLLED, FLAT BAR(SEE DWG. AREL-MB-JGRJ2 REV.0)	C1018	4 3/4	NPN
28	2	CYLINDER SUPPORT, SEE DWG. #JGJ-ALL CYLINDER SUPPORT	G40.2144W	-	NPN
29	2	PLATE,3/4",SMOOTH X 2'-6" X 10 3/4"	G40.2144W	30	040-HA-0075
30	1	PANEL STAND, 30" WIDE, SEE DWG. PANEL STAND REV.1	G40.2144W	-	NPN
31	2	TUBING,12"X8",1/4" THK	G40.21350W	239	020-HA-1200-0800-0025
32	12	TUBING,2"X2",3/16" THK	G40.21350W	9 1/8	020-HA-0200-0200-0018
33	2	TUBING,4"X4",1/4" THK	G40.21350W	47 1/4	020-HA-0400-0400-0025
34	2	TUBING,8"X6",1/4" THK	G40.21350W	46 3/8	020-HA-0800-0600-0025
35	2	WIDE FLANGE,16" X 50#	G40.2150W	19 1/16	034-HA-1600-0500
36	2	WIDE FLANGE,16" X 50#	G40.2150W	21 1/16	034-HA-1600-0500
37	2	WIDE FLANGE,16" X 50#	G40.2150W	21 5/16	034-HA-1600-0500
38	1	WIDE FLANGE,16" X 50#	G40.2150W	22	034-HA-1600-0500
39	1	WIDE FLANGE,16" X 50#	G40.2150W	26	034-HA-1600-0500
40	5	WIDE FLANGE,16" X 50#	G40.2150W	45 3/8	034-HA-1600-0500
41	2	WIDE FLANGE,16" X 50#	G40.2150W	312 5/16	034-HA-1600-0500
42	2	WIDE FLANGE,16" X 50#	G40.2150W	67 5/8	034-HA-1600-0500
43	1	WIDE FLANGE,16" X 50#	G40.2150W	181 11/16	034-HA-1600-0500
44	2	WIDE FLANGE,21" X 68#	G40.2150W	45 3/8	034-HA-2100-0680
45	2	WIDE FLANGE,4" X 13#	G40.2150W	240	034-HA-0400-0130
46	1	WIDE FLANGE,6" X 15#	G40.2150W	40 3/8	034-HA-0600-0150
47	1	WIDE FLANGE,6" X 15#	G40.2150W	42 3/8	034-HA-0600-0150
48	10	WIDE FLANGE,6" X 15#	G40.2150W	61 13/16	034-HA-0600-0150
49	-	BAR GRATING, 1" DEEP X 3/16"T (SQ. FT.)	-	220	049-19W4-HAP-0018-0100
50	1	PLATE,12 GA,SMOOTH SHEAR TO 3'-6" (CTS) (SHOP TO ORDER)	G40.2144W	228	044-HA-0012
51	-	PLATE,12 GA,SMOOTH (CTS) (SQ. FT.) (SHOP TO ORDER)	G40.2144W	200	044-HA-0012
52	-	CONCRETE, MIX 20B5GN1, 20 MPA, STRENGTH C/W AIR, 2292 KG/M CU. (142LBS/FT3) (M. CU.)(SEE SECTION A-A FOR LOCATIONS)	-	2.1	CONCRETE-20B57GN1-350
53	2	PIPE,2",XS	SA-106-B	7 1/16	602-JPB-1200

PROFESSIONAL ENGINEER ALBERTA
BRIAN J.R. SMIT
Sep 1/10

RELEASED FOR FABRICATION
NAME B. McLean DATE 07/08/10

IMPORTANT NOTICE TO OWNER/OPERATOR

THE DESIGN OF THE FOUNDATION FOR THIS COMPRESSOR PACKAGE IS NOT IN THE SCOPE OF SUPPLY BY TOROMONT ENERGY SYSTEMS INC. ("TESI"). AS SUCH, THE DESIGN AND ADEQUACY OF THE FOUNDATION IS ENTIRELY THE RESPONSIBILITY OF THE OWNER/OPERATOR AND/OR ITS ENGINEERING FIRM AND THEIR REPRESENTATIVES. REFER TO TESI DWG. NO. 31834-351, SHEET 1 FOR FURTHER INFORMATION, AND OWNER/OPERATOR'S OBLIGATIONS AND LEGAL LIMITATIONS.

NOTES

1. GRIND ALL ROUGH EDGES & WELD SPLATTER.
2. SANDBLAST INTERNALS OF GLYCOL STORAGE TANK PRIOR TO FINAL ASSEMBLY.
3. AIR PRESSURE TEST GLYCOL & OIL TANKS TO 10 PSI.
4. CONSTRUCT STRUCTURE FLUSH TO TOP UNLESS OTHERWISE NOTED.
5. ⊗ ALL TAIL DIMENSIONS FROM REFERENCE POINT.
6. WEIGHT OF SKID (w/o CONCRETE) 10,500 lbs.
7. 1/4" IN LENGTH HAS BEEN REMOVED FROM ITEMS #40 & 44 FOR FIT UP.
8. SEAL PAN IS FLAT.
9. PRIMER- TPS-SP-001, FIN-1, RED OXIDE
   PAINT- TPS-SP-001, FIN-1, 20-F "WARM GREY"
10. ALL WELDS TO BE 1/4" MIN. FILLETS ALL AROUND, UNLESS OTHERWISE NOTED.
11. ● FULL PENETRATION WELD REQUIRED AT THESE LOCATIONS.
12. X FULL STRENGTH WELD REQUIRED AT THESE LOCATIONS.

DESTROY PREVIOUS COPIES

REV	DESCRIPTION	DATE	BY	APR
2	REV. FOR CWB WELDING PROCEDURES.	07/08/10	BM	CK
1	ISSUED FOR CONSTRUCTION	06/30/10	BM	CK
A	ISSUED FOR APPROVAL	06/18/10	BM	CK

DATE 06/18/10 | SCALE 3/4"=1'-0"
DRAWN BY B. McLean | CHECKED BY C. Xam | APPROVED BY B. Campbell
CUST PO N/A
STEP CODE 400

FOR HUSKY OIL OPERATIONS LTD.
WAUKESHA F18GL
ARIEL JGJ/2-1/2 STD

ENERFLEX
10121 - BARLOW TRAIL N.E.
CALGARY ALBERTA CANADA

PERMIT TO PRACTISE APEGGA PERMIT: No. P8651

TITLE STRUCTURAL STEEL

DWG NO 31834-301 | SHT 1 | REV 2

THE INFORMATION CONTAINED HEREIN IS THE CONFIDENTIAL PROPERTY OF TOROMONT ENERGY SYSTEMS AND IS NOT FOR PUBLICATION, AND NO PART THEREOF SHALL BE COPIED OR COMMUNICATED TO A THIRD PARTY WITHOUT AUTHORIZATION FROM TOROMONT ENERGY SYSTEMS.

P:\30000 Projects\31834 Husky R400 F18GL JGJ2\31834-MODEL-0.dwg
PLOT DATE July 08, 2010

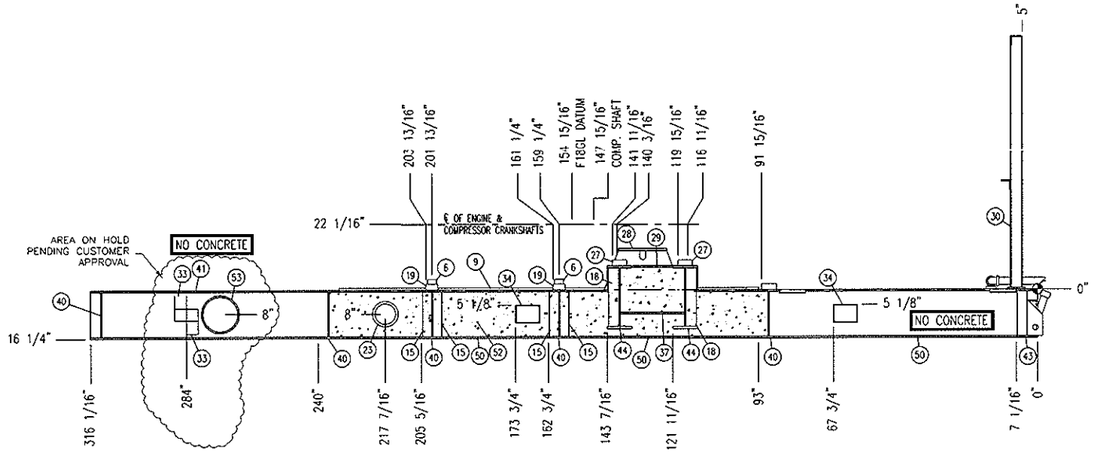

ELEVATION VIEW A-A
SCALE: 1/2"=1'-0"

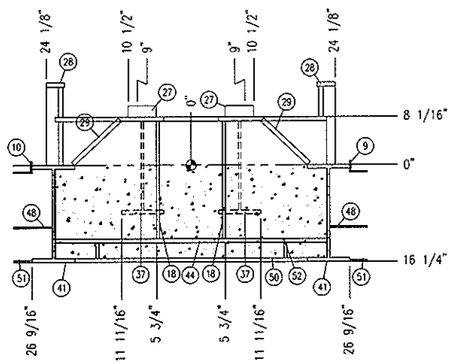

SECTION VIEW C-C
SCALE: 1"=1'-0"

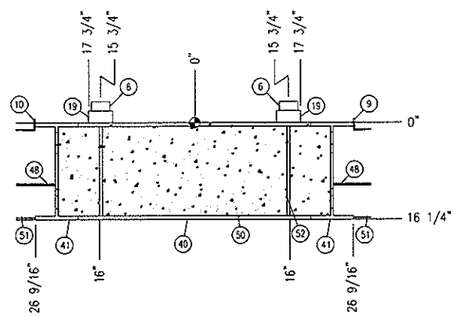

SECTION VIEW D-D
SCALE: 1"=1'-0"

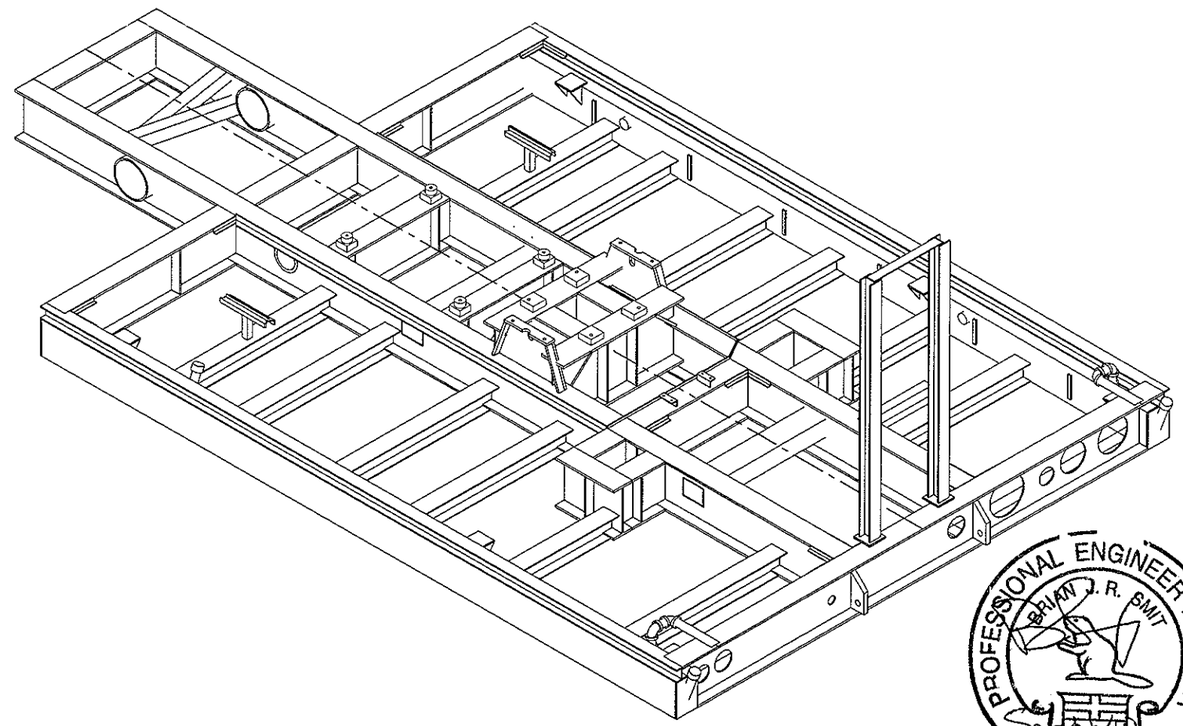

3D SKID ELEVATION
SCALE: NTS

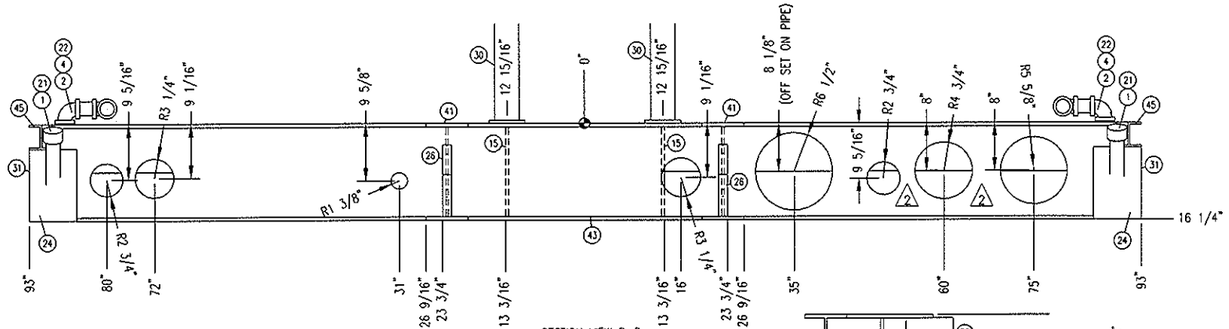

SECTION VIEW B-B
SCALE: 1"=1'-0"

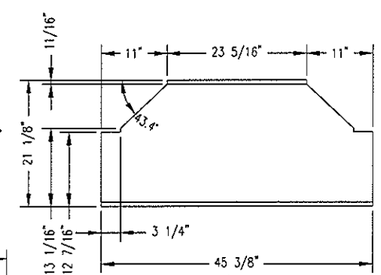

ITEM #44 DETAIL
SCALE: 1"=1'-0"

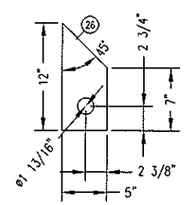

ITEM #26 DETAIL
SCALE: 1 1/2"=1'-0"

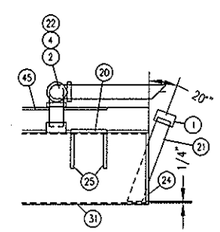

PUMP OUT DETAIL
SCALE: 1"=1'-0"

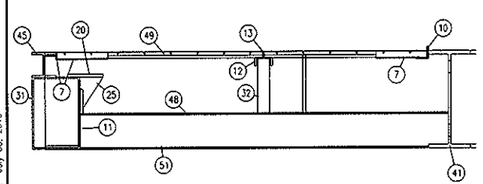

SECTION VIEW E-E
SCALE: 1"=1'-0"

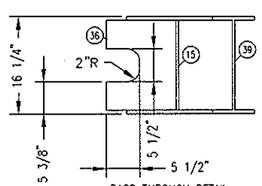

PASS THROUGH DETAIL
SCALE: NTS

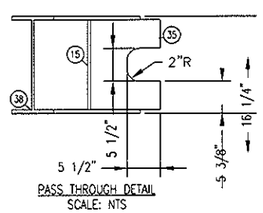

PASS THROUGH DETAIL
SCALE: NTS

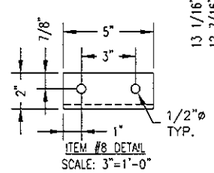

ITEM #8 DETAIL
SCALE: 3"=1'-0"

DESTROY PREVIOUS COPIES

RELEASED FOR FABRICATION
NAME B. McLean DATE 07/07/10

REV	DESCRIPTION	DATE	BY	APR
2	REV. VIEW B-B	07/07/10	BM	CK
1	ISSUED FOR CONSTRUCTION	06/30/10	BM	CK
A	ISSUED FOR APPROVAL	06/18/10	BM	CK

DATE 06/18/10 | SCALE AS SHOWN
DRAWN BY B. McLean | CHECKED BY C. Tam | APPROVED BY B. Campbell
CUST PO N/A
STEP CODE 400

FOR HUSKY OIL OPERATIONS LTD.
WAUKESHA F18GL
ARIEL JGJ/2-1/2 STD

ENERFLEX
10121 - BARLOW TRAIL N.E.
CALGARY ALBERTA CANADA

PERMIT TO PRACTISE APEGGA PERMIT: No. P8651

TITLE STRUCTURAL STEEL DETAILS & SECTIONS

DWG NO 31834-301 | SHT 2 | REV 2

PROFESSIONAL ENGINEER ALBERTA BRIAN J. R. SMIT

THE INFORMATION CONTAINED HEREIN IS THE CONFIDENTIAL PROPERTY OF TORQUOMONT ENERGY SYSTEMS AND IS NOT FOR PUBLICATION OR REPRODUCTION, NOR NO PART THEREOF SHALL BE COPIED OR COMMUNICATED TO A THIRD PARTY WITHOUT AUTHORIZATION FROM TORQUOMONT ENERGY SYSTEMS.

P:\30000 Projects\31834 Husky R400 F18GL JGJ2\31834-MODEL-0.dwg
PLOT DATE July 08, 2010

NOTES:

- **EXTERIOR WALLS TO BE:** 22GA TAN QC8315
- **EXTERIOR ROOF TO BE:** 22GA TAN QC8315
- **EXTERIOR TRIM TO BE:** 22GA METRO BROWN QC8228
- **DOORS TO BE PAINTED:** METRO BROWN QC8228
- **INTERIOR LINER TO BE:** 20GA 10% PERFORATED WHITE ALUM. OVER 3', 24GA WHITE ALUM BELOW
- **INSULATION IN WALLS:** R-12 FIBERGLASS BATT
- **INSULATION IN ROOF:** R-20 FIBERGLASS BATT
- **VAPOUR BARRIER TO BE:** 6 MIL

SURFACE AREA =	1219 SQR/FT.
APROX. TOTAL SHIPPING WEIGHT =	5200Lbs. BUILDING ONLY

- 2 - 18" x 32" MANUALLY OPERABLE LOUVERS c/w BIRD SCREENS
- 1 - 16" VENTURI XP. WALL MOUNTED EXHAUST FAN 115/230v, 1ph, 60hz, 1/4hp (36 ACPH) CLASS 1, DIV 1, GROUP C&D c/w BACKDRAFTDAMPER & WEATHER HOOD(TO BE INSTALLED)
- 2 - DOUBLE DOOR CANOPIES (SHIP LOOSE)
- CLIMASEAL FASTENERS THROUGHOUT
- P.ENG. STAMPED BUILDING DWGS. REQ'D. (ALBERTA REGISTERED)

- DESIGN LOADS: SLAVE LAKE AREA
  1/50 SNOW = 1.9kPa
  1/50 WIND = 0.37kPa

- APX. OVERALL BLDG. DIMENSIONS:
- WIDTH = 201"
- HEIGHT = 181" PLUS SKID

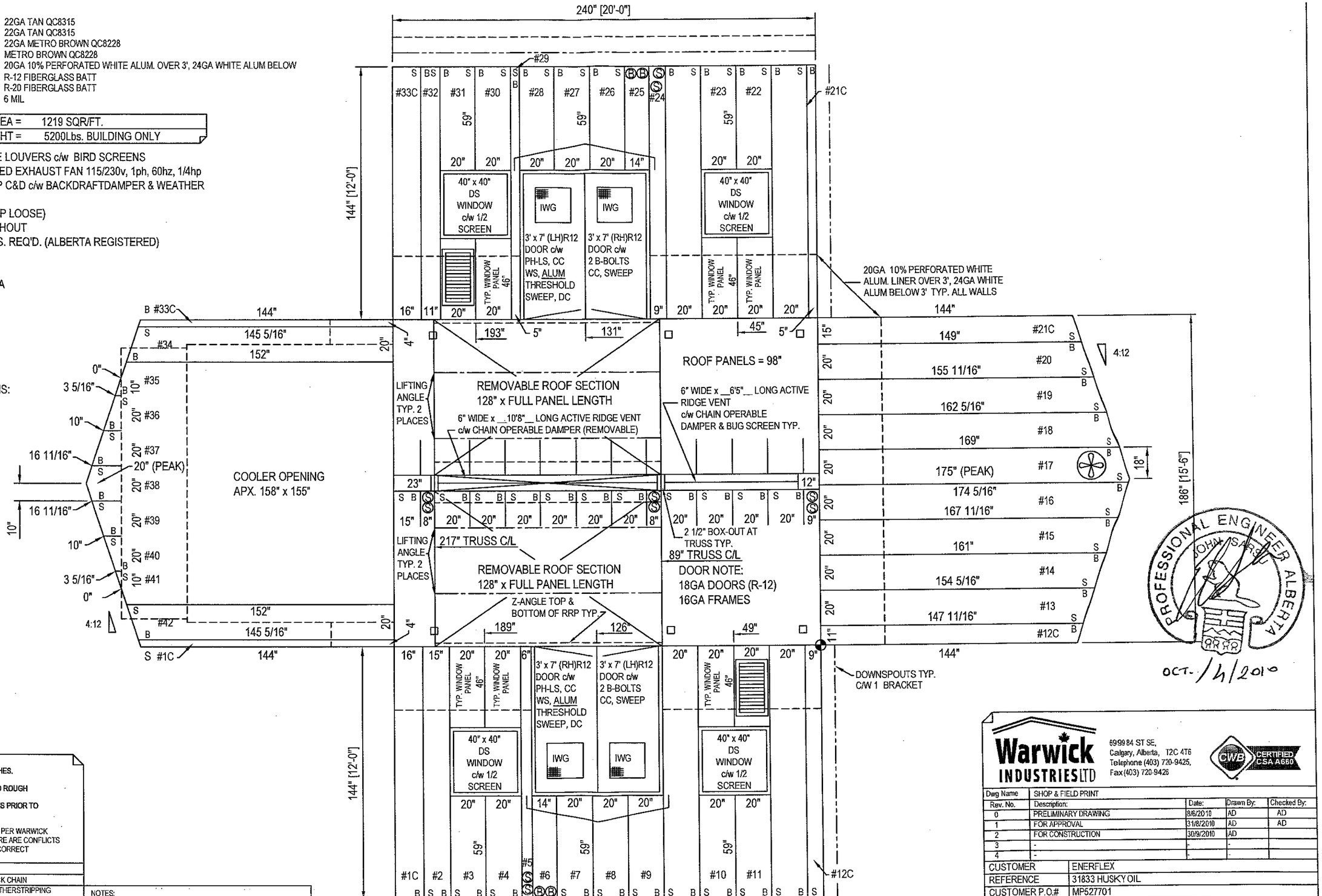

NOTE:
- ALL DIMENSIONS ARE IN INCHES AND DECIMAL INCHES.
- DO NOT SCALE DRAWINGS.
- ALL DIMENSIONS TO WINDOWS AND DOORS ARE TO ROUGH OPENINGS.
- CONFIRM LOCATION OF ANY LOUVERS AND OR FANS PRIOR TO INSTALLATION
- CENTER BUILDING ON SKID
- BUILDING INSTALLATION & ASSEMBLY SHALL BE AS PER WARWICK INSTALLATION MANUAL, AND DETAILS. WHERE THERE ARE CONFLICTS INFORMATION ON DRAWINGS SHALL BE TAKEN AS CORRECT

LEGEND

DS = DOUBLE GLAZED	CC = CHECK CHAIN
IWG = INDUSTRIAL WIRE GLASS	WS = WEATHERSTRIPPING
RH = RIGHT HAND SWING	DC = HYDRAULIC CLOSURE
LH = LEFT HAND SWING	SG = INTERIOR SLIDE GATE
PH = PANIC HARDWARE	GA = GAUGE
LS = LOCK CYLINDER	INS = INSULATED
R-12 = CORE INSULATION (R-12)	

NOTES:
BUILDING IS DESIGNED TO COMPLY WITH N.B.C. 2005 AS PER THE WIND AND SNOW LOAD SPECIFIED ON THE DRAWING. OWNER SHALL CONTACT WARWICK INDUSTRIES, IF ACTUAL BUILDING LOCATION DIFFERS FROM THOSE SHOWN, IN ORDER TO VALIDATE THE STABILITY OF THE DESIGN FOR THE INTENDED LOCATION.

Warwick INDUSTRIES LTD
6999 84 ST SE,
Calgary, Alberta, T2C 4T6
Telephone (403) 720-9425,
Fax (403) 720-9426
CWB CERTIFIED CSA A660

Dwg Name	SHOP & FIELD PRINT			
Rev. No.	Description:	Date:	Drawn By:	Checked By:
0	PRELIMINARY DRAWING	8/6/2010	AD	AD
1	FOR APPROVAL	31/8/2010	AD	AD
2	FOR CONSTRUCTION	30/9/2010	AD	
3	-	-	-	
4	-	-	-	

CUSTOMER	ENERFLEX
REFERENCE	31833 HUSKY OIL
CUSTOMER P.O.#	MP527701
LOCATION	ENERFLEX 10121 BARLOW TRAIL N.E.
DATE REQUIRED	SEPTEMBER 2010
JOB NUMBER	W24848
DRAWING #	W24848-01

NOTES:

- **EXTERIOR WALLS TO BE:** 22GA TAN QC8315
- **EXTERIOR ROOF TO BE:** 22GA TAN QC8315
- **EXTERIOR TRIM TO BE:** 22GA METRO BROWN QC8228
- **DOORS TO BE PAINTED:** METRO BROWN QC8228
- **INTERIOR LINER TO BE:** 20GA 10% PERFORATED WHITE ALUM. OVER 3', 24GA WHITE ALUM BELOW
- **INSULATION IN WALLS:** R-12 FIBERGLASS BATT
- **INSULATION IN ROOF:** R-20 FIBERGLASS BATT
- **VAPOUR BARRIER TO BE:** 6 MIL

SURFACE AREA =	1219 SQR/FT.
APROX. TOTAL SHIPPING WEIGHT =	5200Lbs. BUILDING ONLY

- 2 - 18" x 32" MANUALLY OPERABLE LOUVERS c/w BIRD SCREENS
- 1 - 16" VENTURI XP. WALL MOUNTED EXHAUST FAN 115/230v, 1ph, 60hz, 1/4hp (36 ACPH) CLASS 1, DIV 1, GROUP C&D c/w BACKDRAFTDAMPER & WEATHER HOOD(TO BE INSTALLED)
- 2 - DOUBLE DOOR CANOPIES (SHIP LOOSE)
- CLIMASEAL FASTENERS THROUGHOUT
- P.ENG. STAMPED BUILDING DWGS. REQ'D. (ALBERTA REGISTERED)

- DESIGN LOADS: SLAVE LAKE AREA
  1/50 SNOW = 1.9kPa
  1/50 WIND = 0.37kPa

- APX. OVERALL BLDG. DIMENSIONS:
- WIDTH = 201"
- HEIGHT = 181" PLUS SKID

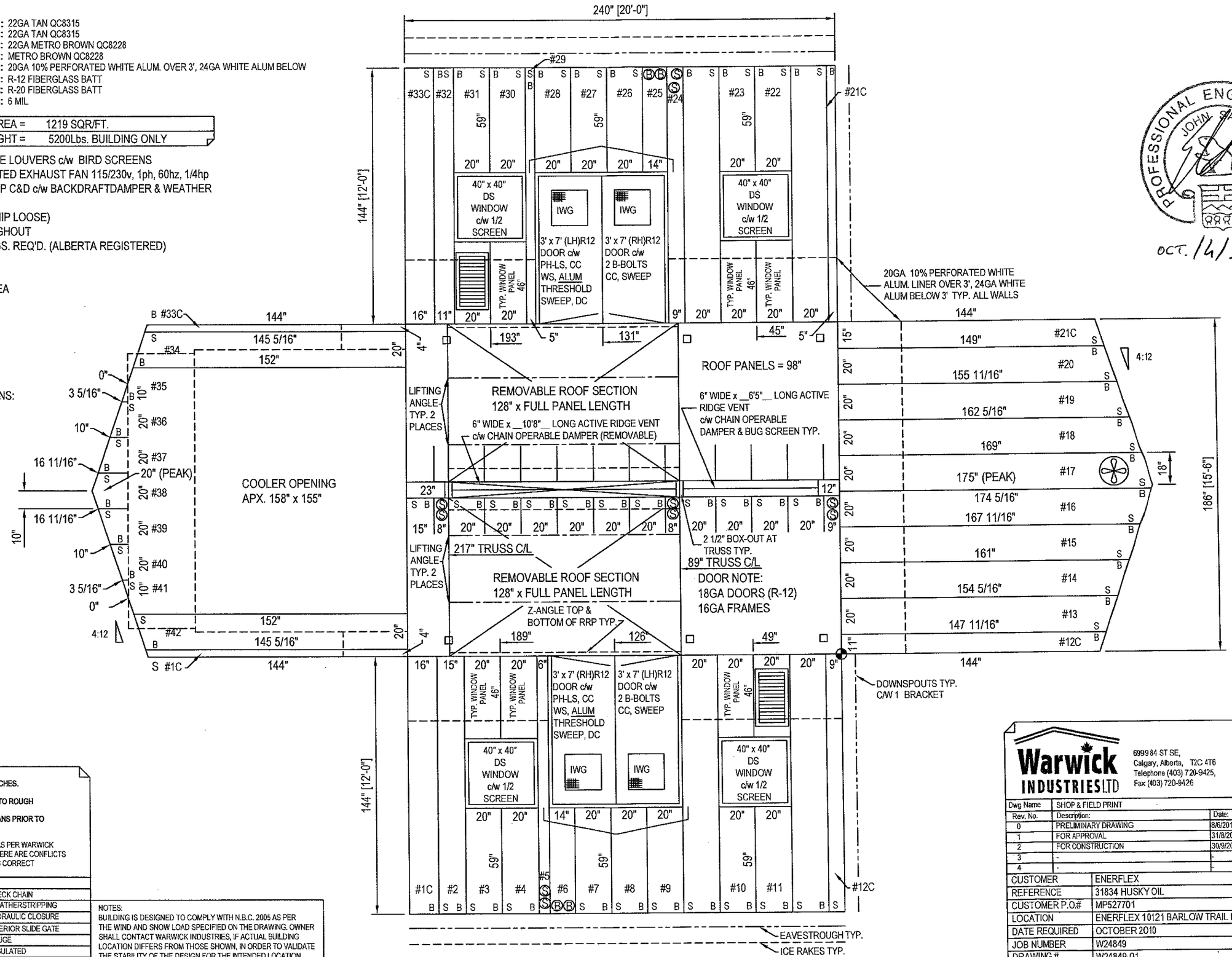

PROFESSIONAL ENGINEER JOHN BARTER ALBERTA

OCT. 14/2010

NOTE:
- ALL DIMENSIONS ARE IN INCHES AND DECIMAL INCHES.
- DO NOT SCALE DRAWINGS.
- ALL DIMENSIONS TO WINDOWS AND DOORS ARE TO ROUGH OPENINGS.
- CONFIRM LOCATION OF ANY LOUVERS AND OR FANS PRIOR TO INSTALLATION
- CENTER BUILDING ON SKID
- BUILDING INSTALLATION & ASSEMBLY SHALL BE AS PER WARWICK INSTALLATION MANUAL, AND DETAILS. WHERE THERE ARE CONFLICTS INFORMATION ON DRAWINGS SHALL BE TAKEN AS CORRECT

LEGEND	
DS = DOUBLE GLAZED	CC = CHECK CHAIN
IWG = INDUSTRIAL WIRE GLASS	WS = WEATHERSTRIPPING
RH = RIGHT HAND SWING	DC = HYDRAULIC CLOSURE
LH = LEFT HAND SWING	SG = INTERIOR SLIDE GATE
PH = PANIC HARDWARE	GA = GAUGE
LS = LOCK CYLINDER	INS = INSULATED
R-12 = CORE INSULATION (R-12)	

NOTES:
BUILDING IS DESIGNED TO COMPLY WITH N.B.C. 2005 AS PER THE WIND AND SNOW LOAD SPECIFIED ON THE DRAWING. OWNER SHALL CONTACT WARWICK INDUSTRIES, IF ACTUAL BUILDING LOCATION DIFFERS FROM THOSE SHOWN, IN ORDER TO VALIDATE THE STABILITY OF THE DESIGN FOR THE INTENDED LOCATION.

Warwick INDUSTRIES LTD
6999 84 ST SE,
Calgary, Alberta, T2C 4T6
Telephone (403) 720-9425,
Fax (403) 720-9426

CWB CERTIFIED CSA A660

Dwg Name	SHOP & FIELD PRINT			
Rev. No.	Description:	Date:	Drawn By:	Checked By:
0	PRELIMINARY DRAWING	8/6/2010	AD	AD
1	FOR APPROVAL	31/8/2010	AD	AD
2	FOR CONSTRUCTION	30/9/2010	AD	AD
3	-	-	-	
4	-	-	-	

CUSTOMER	ENERFLEX
REFERENCE	31834 HUSKY OIL
CUSTOMER P.O.#	MP527701
LOCATION	ENERFLEX 10121 BARLOW TRAIL N.E.
DATE REQUIRED	OCTOBER 2010
JOB NUMBER	W24849
DRAWING #	W24849-01