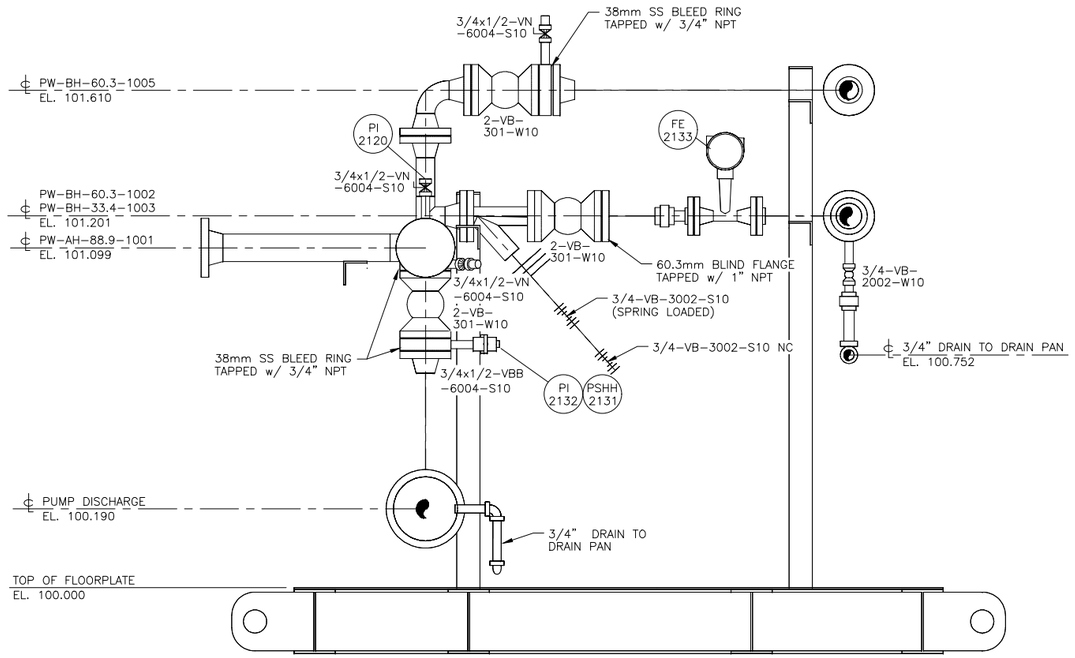

SCALE 1:10

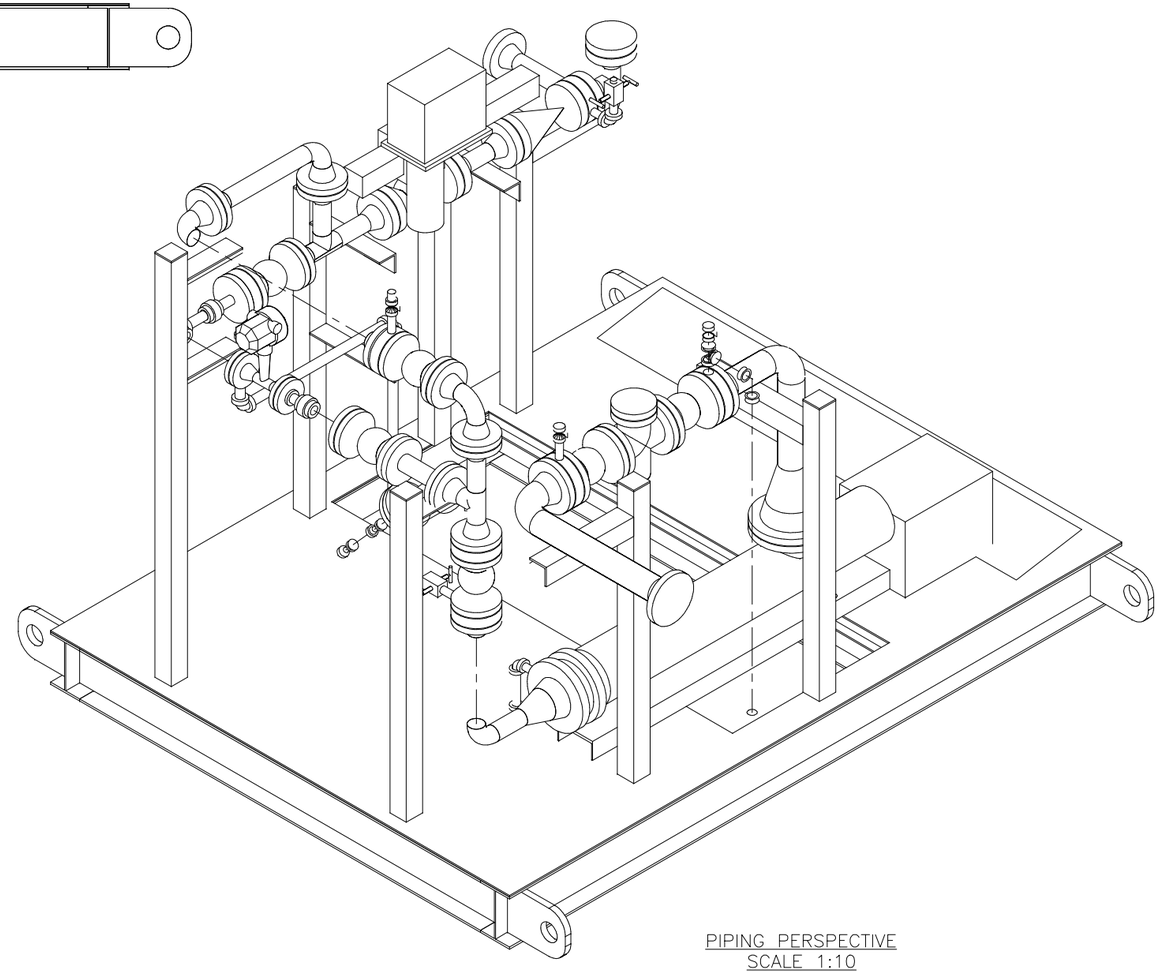

PIPING PERSPECTIVE
SCALE 1:10

NOTES

1. ALL DIMENSIONS ARE IN MILLIMETERS.
2. DRAWING IS NOT TO SCALE UNLESS PLOTTED "D" SIZE.
3. PIPING DOWNSTREAM OF PUMP IS 600 ANSI PIPING, HOWEVER IT HAS BEEN DE-RATED TO 300 ANSI TO MATCH FLOWLINE.

BAR Engineering

ENGINEERING COMPANY PERMIT STAMP	REGISTERED PROFESSIONAL ENGINEER STAMP

REF	DRAWING NUMBER	DRAWING TITLE

REFERENCE DRAWINGS

REV	DATE	DESCRIPTION	BY	CHK	ENG	APR
2	2018/05/31	IFC FOR EWR 23039 BAR 170G-296400	SM	GM	BR	NN
1	2013/05/22	IFC FOR EWR 15759 BAR 11-0190	WG	CM	RZ	BS

REVISION HISTORY

Husky Oil Operations Limited

HOG GENERAL

TITLE
WATER TRANSFER SKID
PIPING SECTION/PIPING PERSPECTIVE

SURFACE LOCATION	L7 GENERAL	
ALTERNATE DWG NUMBER		REV NO
HUSKY DWG NUMBER	L7-PM-0094-01	2
VENDOR DWG NUMBER		SCALE
AMU/FLOC NUMBER	–	AS SHOWN
DCN NO	PROJECT NO	EWR 23039