NOTES:

1.- REFER TO ARIEL TECHNICAL MANUAL AND ARIEL PACKAGER STANDARDS FOR PROPER ROUTING AND SAFETY INFORMATION ON ALL CONNECTIONS.

2.- REFER TO THE ARIEL ASSEMBLY DRAWING THAT ACCOMPANIES YOUR UNIT FOR THE EXACT CONFIGURATION OF CONNECTION FITTINGS. IT MAY VARY FROM THE ONE SHOWN HERE.

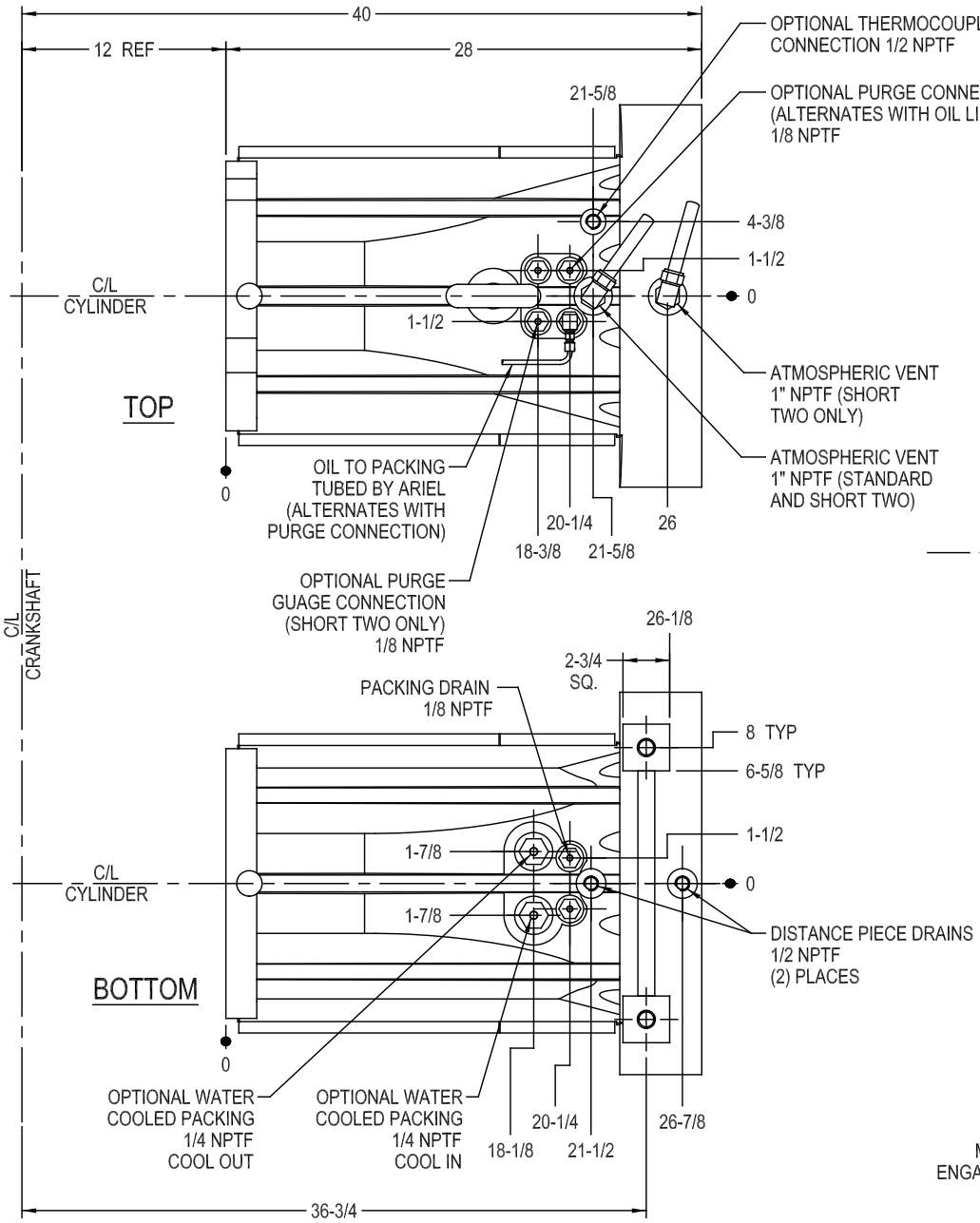

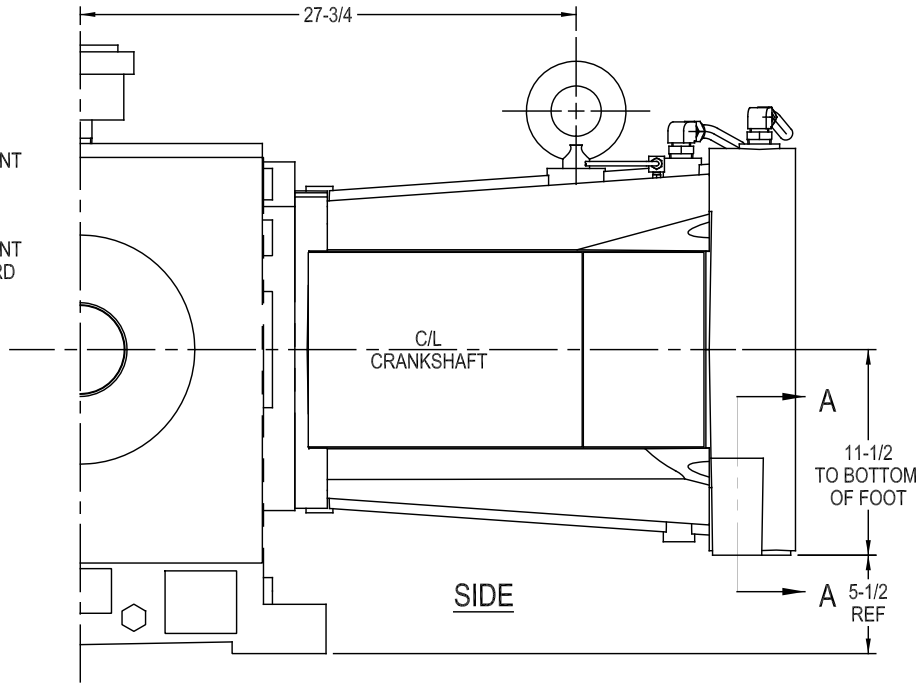

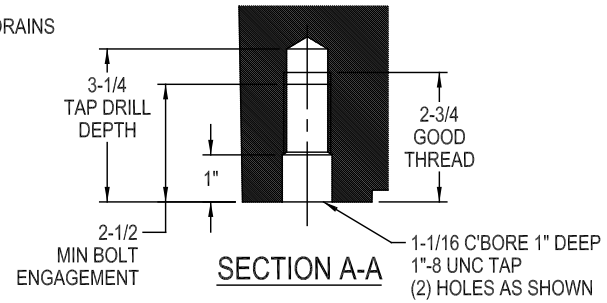

SECTION A-A

FOR USE WITH K:T CYLINDERS ONLY

REV	DESCRIPTION	INIT/DATE

DIMENSIONS ARE IN INCHES UNLESS OTHERWISE SPECIFIED.

REV	ECN
0	18204

ARIEL CORPORATION
ARIEL CORPORATION
MOUNT VERNON, OHIO 43050

DRAWN: TDM 5/22/13
CHECKED: KRN 5/30/13
SCALE: NONE

GUIDE OUTLINE
K:T CLASS, STD/S2

DWG. NO. OL0514

SHT 1 OF 1