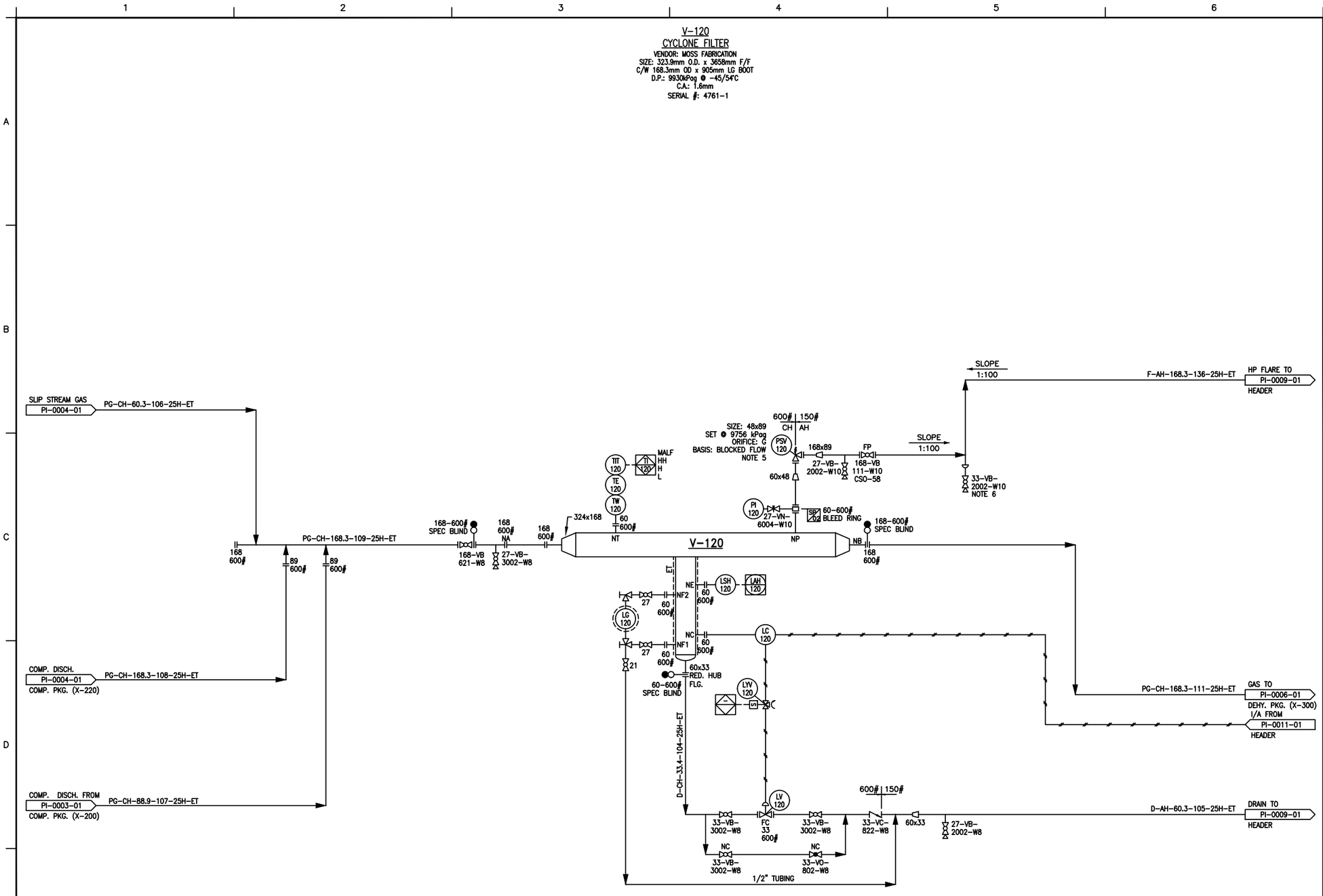

NOTES

1. ALL PROCESS & INSTRUMENT VENTS SHALL BE AT LEAST 500mm FROM ANY ELECTRICAL CONNECTION OR OUTLET.
2. INSULATE ALL A/G PIPE AND FLANGES WHERE SPECIFIED WITH FIBERGLASS INSULATION AND ALUMINIUM CLADDING.
3. ▲ DENOTES VENDOR SUPPLIED ITEMS WHERE O/S OF PACKAGED UNITS.
4. FIELD TO SUPPLY VENTS AND DRAINS AS REQUIRED.
5. PRE-EXISTING CONVENTIONAL STYLE PSV REPLACED BY PILOT-OPERATED PSV DUE TO INCREASED OPERATING PRESSURE. NO CHANGE IN ORIFICE SIZES BETWEEN THE TWO PSVS.
6. AN OPERATING PROCEDURE IN PLACE TO ENSURE THAT NO ACCUMILATED LIQUID IS PRESENT IN PSV OUTLET HEADER AND DRAIN THE LINE WHEN IT IS REQUIRED.

ENGINEERING COMPANY PERMIT STAMP

REGISTERED PROFESSIONAL ENGINEER STAMP

REF	DRAWING NUMBER	DRAWING TITLE
6		
5		
4		
3		
2		
1		

REFERENCE DRAWINGS

REV	DATE	DESCRIPTION	BY	CHK	ENG	APR
6	2017/03/10	IFC FOR EWR 22510 STANTEC 110902423	JJ			
5	2016/10/21	IFC FOR EWR 22324 STANTEC 110902387	AJH	CL	ADD	
4	2015/04/30	AS BUILT FOR EWR 19227 EXCELSIOR 4178HUS	KM	TMD	AM	SA
3	2014/12/01	IFN FOR EWR 19227 EXCELSIOR 4178HUS	KM	KAB	AM	SA
2	2014/08/20	AS BUILT FOR EWR 18319 EXCELSIOR 3829HUS	TMD	JD	JC	AM
7	2018/01/18	AS BUILT FOR MOC EI 10875835 (CAR SEAL REVIEW)	KZ	CM	CM	CM

REVISION HISTORY

Husky Oil Operations Limited

RAVEN CREEK 02-20-050-18W5 COMP STN

TITLE: CYCLONE FILTER (V-120)
PIPING & INSTRUMENTATION DIAGRAM

SURFACE LOCATION	02-20-050-18W5	
ALTERNATE DWG NUMBER	PI-10-A-0005-1	REV NO
HUSKY DWG NUMBER	02-20-050-18W5-PI-0005-01	7
VENDOR DWG NUMBER		SCALE
AMU/FLOC NUMBER	W5-01-001-00007	NTS
DCN NO	PROJECT NO MOC EI 10875835	