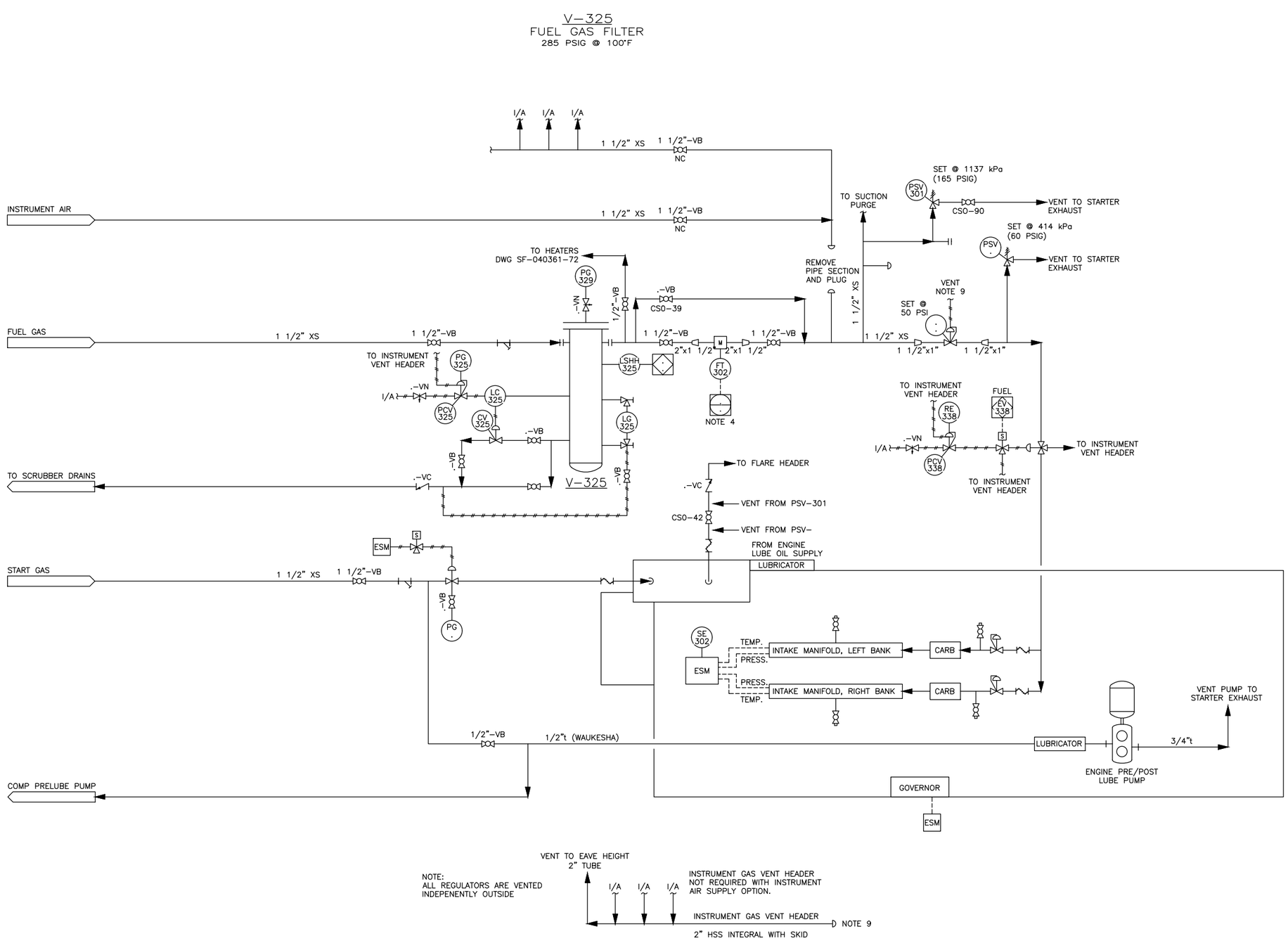

NOTES

1. PROCESS INSTRUMENT LINES: 3/8" 316SS TUBING c/w 3/8" 316SS SWAGELOCK FITTING & 316SS FERRULES UNLESS OTHERWISE NOTED.
2. UTILITY INSTRUMENT LINES: 3/8" 316SS TUBING c/w 3/8" 316SS SWAGELOCK FITTING & 316SS FERRULES UNLESS OTHERWISE NOTED.
3. INSTRUMENT MEDIUM: CLEAN, DRY AIR OR GAS.
4. ALL PPIPING 2" AND UNDER TO BE XH MINIMUM. ALL SCREWED PROCESS PIPING SHALL BE SCH 160 SEAMLESS.
5. ALL FITTINGS TO BE 3003 RATING UNLESS OTHERWISE NOTED.
6. CORROSION ALLOWANCE: 1/8" (0.125") (PROCESS ONLY).
7. ARE CLASSIFICATION: CLASS 1 ZONE 2 (BASED ON FUGITIVE EMISSION STUDY).
8. INSTRUMENT AIR TAGS REQUIRED: NO.
9. INSTRUMENTS USING INSTRUMENT GAS MUST BE VENTED TO INSTRUMENT GAS VENT HEADER. INSTRUMENTS USING INSTRUMENT AIR MUST BE VENTED TO ATMOSPHERE.
10. SURFACE PREP: SSPC-SP2, PAINT (1) COAT: F34 WARM GREY ENAMEL.
11. PROCESS GAS: SWEET.
12. CONDUIT TYPE: GALVANIZED.
13. PROCESS HARDWARE: STUDS: B7M
    NUTS: 2HM
    GASKETS: FLEXTALLIC 316SS (GREY STRIPE).

ENGINEERING COMPANY PERMIT STAMP	REGISTERED PROFESSIONAL ENGINEER STAMP

REF	DRAWING NUMBER	DRAWING TITLE
6		
5		
4		
3		
2		
1		

REFERENCE DRAWINGS

REV	DATE	DESCRIPTION	BY	CHK	ENG	APR
3	2018/07/18	UPDATED FOR MOC EI 10966322	BRM	AG	AG	AG
2	2018/03/07	AS BUILT FOR MOC EI10894387	SK	CM	CM	CM
1	2016/07/05	CREATED FOR MOC 16505791	KZ	BRM	CM	

REVISION HISTORY

Husky Oil Operations Limited

MINEHEAD 03-06-049-18W5 COMP STN – NORTH

TITLE 2 STAGE SWEET NATURAL GAS COMPRESSOR PACKAGE
FUEL & START GAS SYSTEM
PIPING & INSTRUMENTATION DIAGRAM

SURFACE LOCATION	03-06-049-18W5	
ALTERNATE DWG NUMBER	17006-71	REV NO
HUSKY DWG NUMBER	03-06-049-18W5-PI-0041-22	3
VENDOR DWG NUMBER	VV-0061-22	SCALE
AMU/FLOC NUMBER	W5-01-001-00005	NTS
DCN NO	PROJECT NO MOC EI 10966322	