NOZZLE SCHEDULE

MARK	SIZE (NPS)	RATING (CL)	TYPE	SERVICE	NOZZLE BORE	REPAD	PROJ'N I/S	PROJ'N O/S	WELD DETAIL	WELD SIZE A	WELD SIZE B	WELD SIZE C	WELD SIZE D	REMARKS
N1	6	300	RF WN	RAW CONDENSATE INLET w/ DIVERTER	SCH. 160		3/4"	8"						
N2	6	300	RF WN	CLEAN CONDENSATE OUTLET	SCH. 160		3/4"	8"						
N3	2	300	RF WN	WATER OUTLET / DRAIN	SCH. 160		GRIND FLUSH	SHOWN						
N4	2	300	RF WN	RELIEF	SCH. 160		SET FLUSH	6"						
N5 A	2	300	RF WN	WATER LEVEL BRIDLE	SCH. 160		SET FLUSH	SHOWN						
N5 B	2	300	RF WN	WATER LEVEL BRIDLE	SCH. 160		SET FLUSH	6"						
M1	20	300	RF WN	MANWAY w/ BLIND & DAVIT	SCH. 80		1 1/2"	SHOWN						
B1	12		PIPE	WATER BOOT	SCH. XS	3" WIDE x 5/8" THK	GRIND FLUSH	SHOWN						
C1	3/4"	6000	COUPLING	DPI			SET FLUSH							
C2	3/4"	6000	COUPLING	PRESSURE INDICATOR / DPI			SET FLUSH							
C3	3/4"	6000	COUPLING	TEMPERATURE INDICATOR			SET FLUSH							

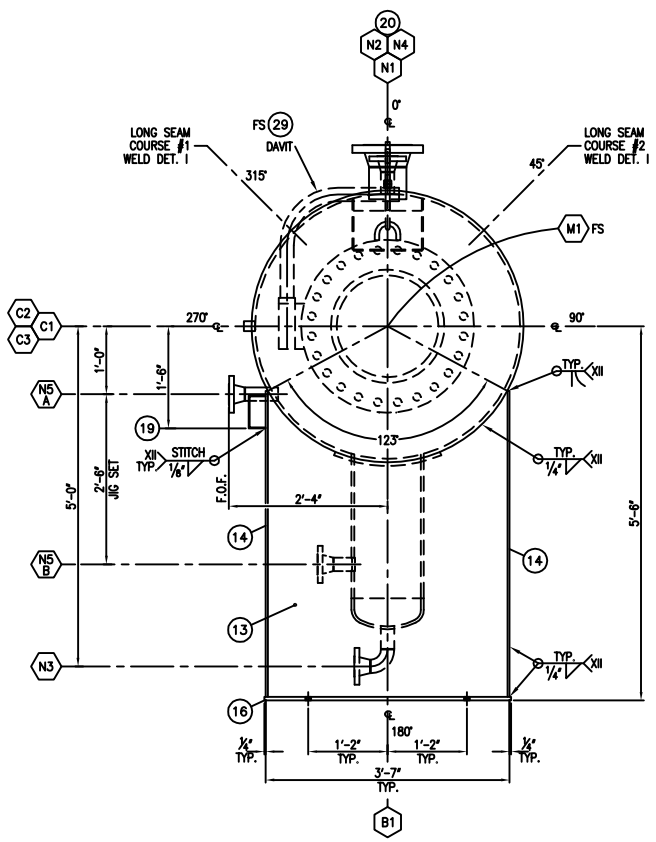

ORIENTATION

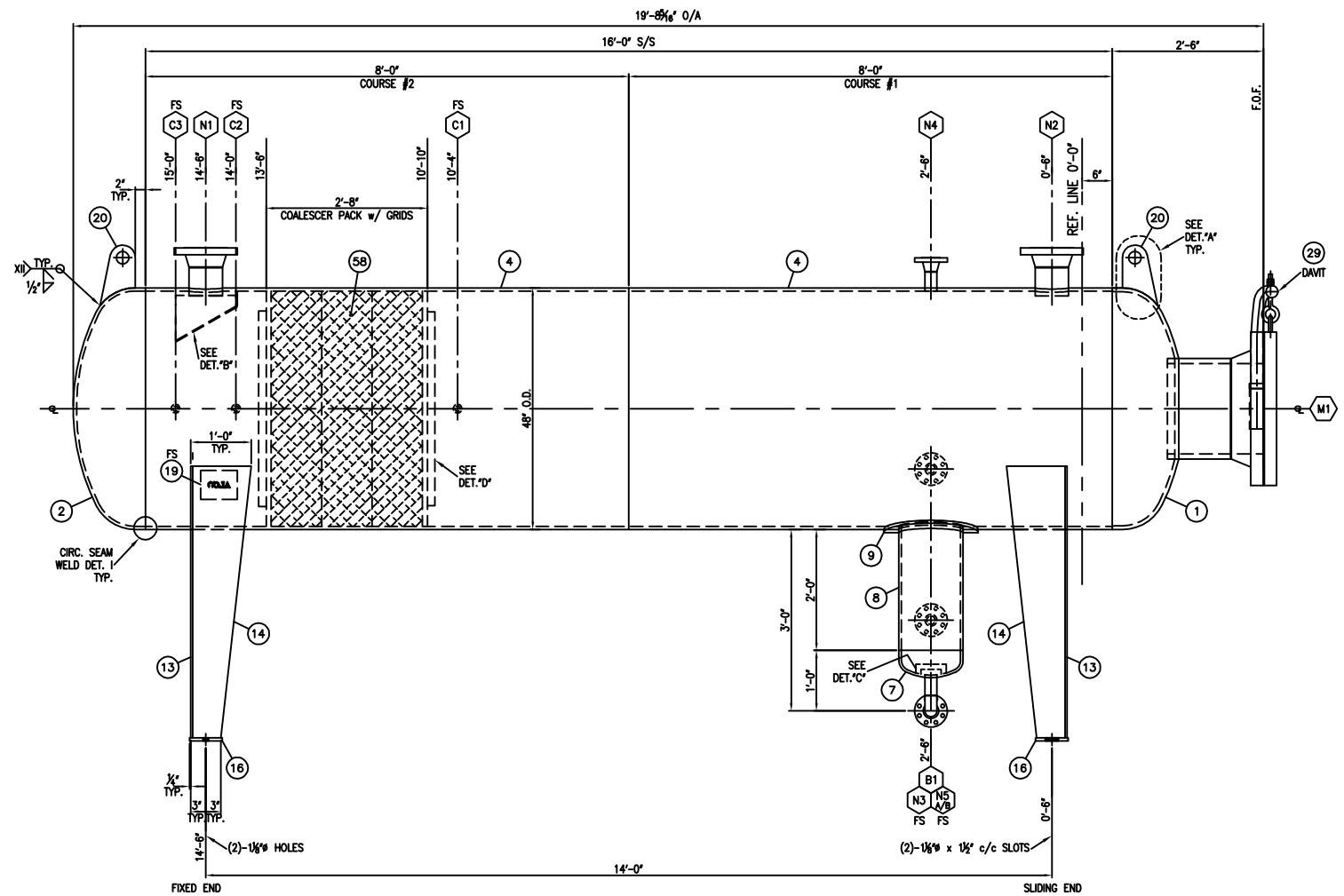

ELEVATION

DESIGN DATA

M.A.W.P.: 400 PSIG @ 300°F	M.D.M.T.: -20°F @ 400 PSIG
M.A.E.P.: 0 PSIG @ 300°F	CORROSION ALLOWANCE: 1/16"
RADIOGRAPHY: UW-11(a)5(b)	LONG'L JOINT EFF.: 100%
P.W.H.T.: NONE	HYDROTEST: 520 PSIG
HEADS: SA-516-70N (0.68"/0.58"/0.375" MIN)	FLANGES: SA-105N
SHELL: SA-516-70N (5/8" NOM. THK)	NOZZLES: SA-106-B
WELD FITTINGS: SA-234-WPB	STUDS: SA-193-B7
COUPLINGS (T.O.L.): SA-105N	NUTS: SA-194-2H
INTERNALS: SA-36 / CSA-G40.21-44W	MISC. PLATE SA-36
SHIPPING WT.: 9,250 lbs. (EMPTY)	CAPACITY: 214 ft^3
TESTING WT.: 22,610 lbs. (FULL OF WATER)	

SURFACE PREPARATION: COMMERCIAL BLAST TO SSPC-SP6.

PAINT: PRIMER: 5-8 MIL DFT CLOVALINE 8329 EPOXY PRIMER.

FINISH: 2-3 MIL DFT ARMOURSHIELD 839 ACRYLIC URETHANE (WARM GREY).

INSULATION: NONE

C.R.N.: | SERIAL NO.: 2011-8169-02

NOTES

REV.	DATE	CHIEF MECH. ENGR.	DESCRIPTION
0			ISSUED FOR CONSTRUCTION

CALCULATION REVISIONS

DWG.	DESCRIPTION	REV.	DATE	REV. BY:	CHKD BY: CO-ORD.	APPD BY: CHIEF ENGR.	DESCRIPTION
C-5519	NPS 20-CL 300 ALCO STD HORIZ. DAVIT	0	2011 02/24	JBW			ISSUED FOR CONSTRUCTION
B-2011-8169-02B	BILL OF MATERIALS	A	2011 02/24	JBW			ISSUED FOR APPROVAL

REFERENCE DRAWINGS | REVISIONS

ONE (1) UNIT REQUIRED

DRAWN	J.B.WECLAW
DATE	2011/02/08
SCALE	3/4"=1'-0"
CHK'D	

ALCO GAS & OIL PRODUCTION EQUIPMENT LTD.
*OP of the ALCO GAS & OIL PRODUCTION EQUIPMENT LIMITED PARTNERSHIP.

The information contained herein is the confidential property of Alco Gas and Oil Production Equipment Ltd., and is not for publication. The information is issued on the understanding that no part thereof shall be copied or communicated to a third party without authorization in writing from Alco Gas and Oil Production Equipment Ltd.

48" O.D. x 16'-0" S/S; 400 PSIG @ 300°F + 1/16" C.A.
HORIZONTAL CONDENSATE CONDITIONER
TAG # V-113

LOCATION: MINEHEAD COMPRESSOR STN | L.S.D.: 03-06-049-18 W5M

CUSTOMER: HUSKY OIL OPERATIONS LIMITED c/o EXCELSIOR ENGINEERING LTD

DWG/SHOP ORDER: D-2011-8169-02-001/001 | REV. 0

D-2011-8169-02-001.dwg, "C:\Documents and Settings\chadd\Local Settings\Temporary Internet Files\OLK2E\D-2011-8169-02-001 CUST rev_0.dwg, 2/25/2011 4:13:57 PM, Plotted By: Chad D.
USER: weclaw, DATE: 02/24/2011 - 4:17 p