Ground Fault is external - BRING TO EXTERNAL TERMINALS (FOR PLANT PLC).

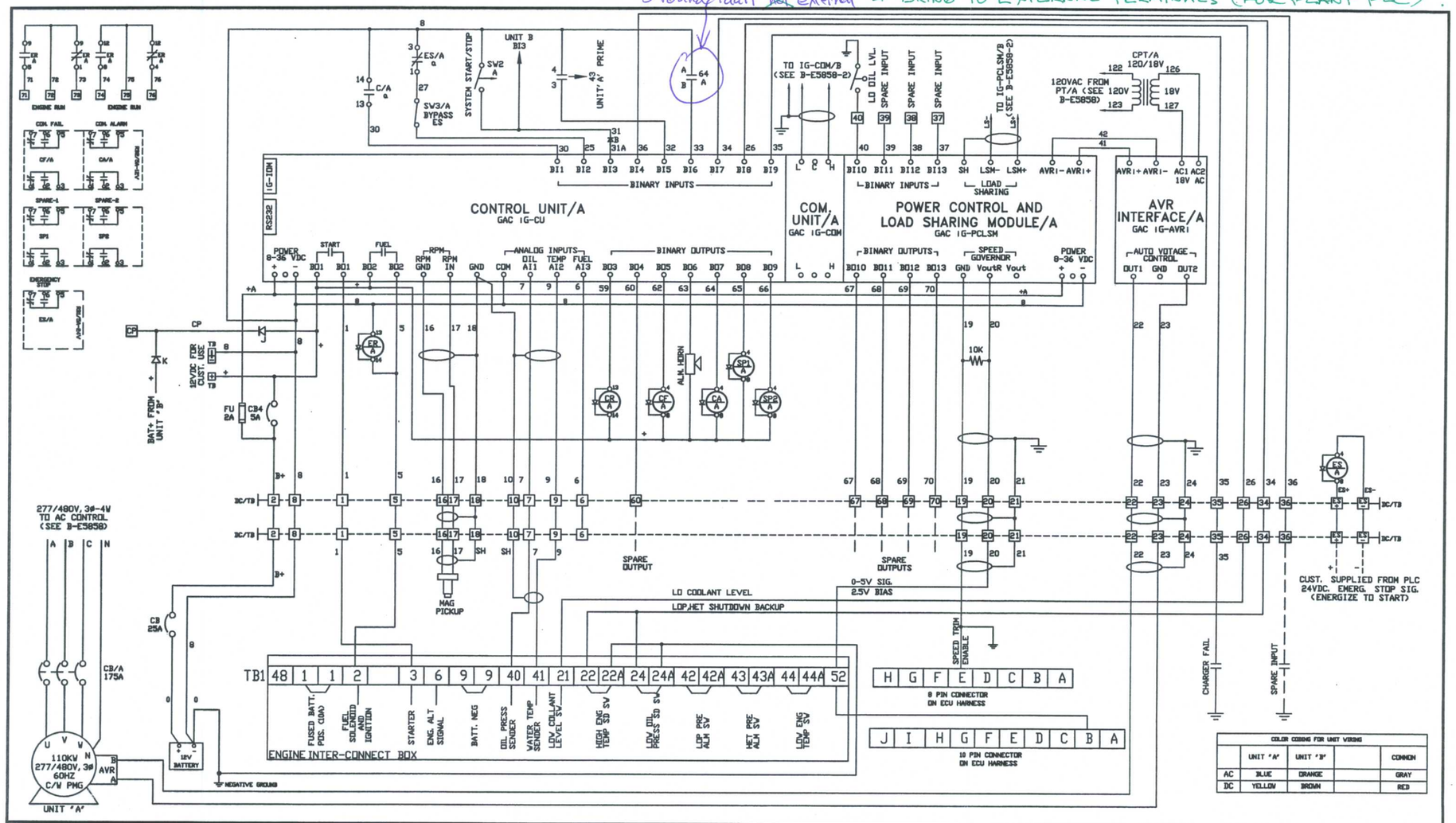

THIS DRAWING CONTAINS CONFIDENTIAL INFORMATION OF A PROPRIETARY NATURE TO SIMMAX INC. REPRODUCTION, TRANSMISSION OR USE FOR ANY PURPOSE WITHOUT THE EXPRESS WRITTEN CONSENT OF SIMMAX INC. IS STRICTLY PROHIBITED.

RELEASED TO PRODUCTION

NO CUSTOMER APPROVAL REQUIRED

CUSTOMER:
S/M CALGARY
HUSKY OIL OPERATIONS LTD.
ANSELL - C/O TARTAN ENG.
06C254

NOTES:

NO.	DESCRIPTION

DRAWN BY: G.P.LAPOINTE
CHECKED BY:
DATE: 05/04/06

REVISIONS

NO.	DATE	BY	DESCRIPTION

SIMSON-MAXWELL

TITLE: SCHEMATIC DIAGRAM OF GEN.CONTROL DC WIRING UNIT "A"

SCALE:	DRAWING NO:	REV:	SIZE
N.T.S.	B-E5858-1	0	B

Tartan ENGINEERING

DRAWING REVIEW

REVIEW IS FOR GENERAL COMPLIANCE WITH CONTRACT DOCUMENTS NO RESPONSIBILITY IS ASSUMED FOR CORRECTNESS OF DESIGN (IF REQUIRED OF THE VENDOR/CONTRACTOR), DIMENSIONS OR DETAILS.

- [ ] NO EXCEPTIONS TAKEN PROCEED WITH CONSTRUCTION
- [x] MAKE CORRECTIONS NOTED PROCEED WITH CONSTRUCTION
- [ ] REVISE AND RESUBMIT

BY [illegible] DATE 06-06-01

PROJ. NO. 336500 DATE RECEIVED May 25/06

Tartan ENGINEERING

DRAWING CHECK

Department	Circulate to	Initial	Date Received	Date Checked
Piping & Design	JK	[illegible]	May 26/06	[illegible]
Process	NF	[illegible]	[illegible]	May 31
Mechanical	JB/GM			
Instrument	KB/BW	[illegible]	MAY 31ST/06	
Systems		[illegible]	June 1/06	
Electrical	JF	[illegible]	MAY 31/06	
Civil & Structural	AB			
Operations				
Project Engineer				
Project Manager	HT			

RETURN TO B.O.B. BY May 30/06