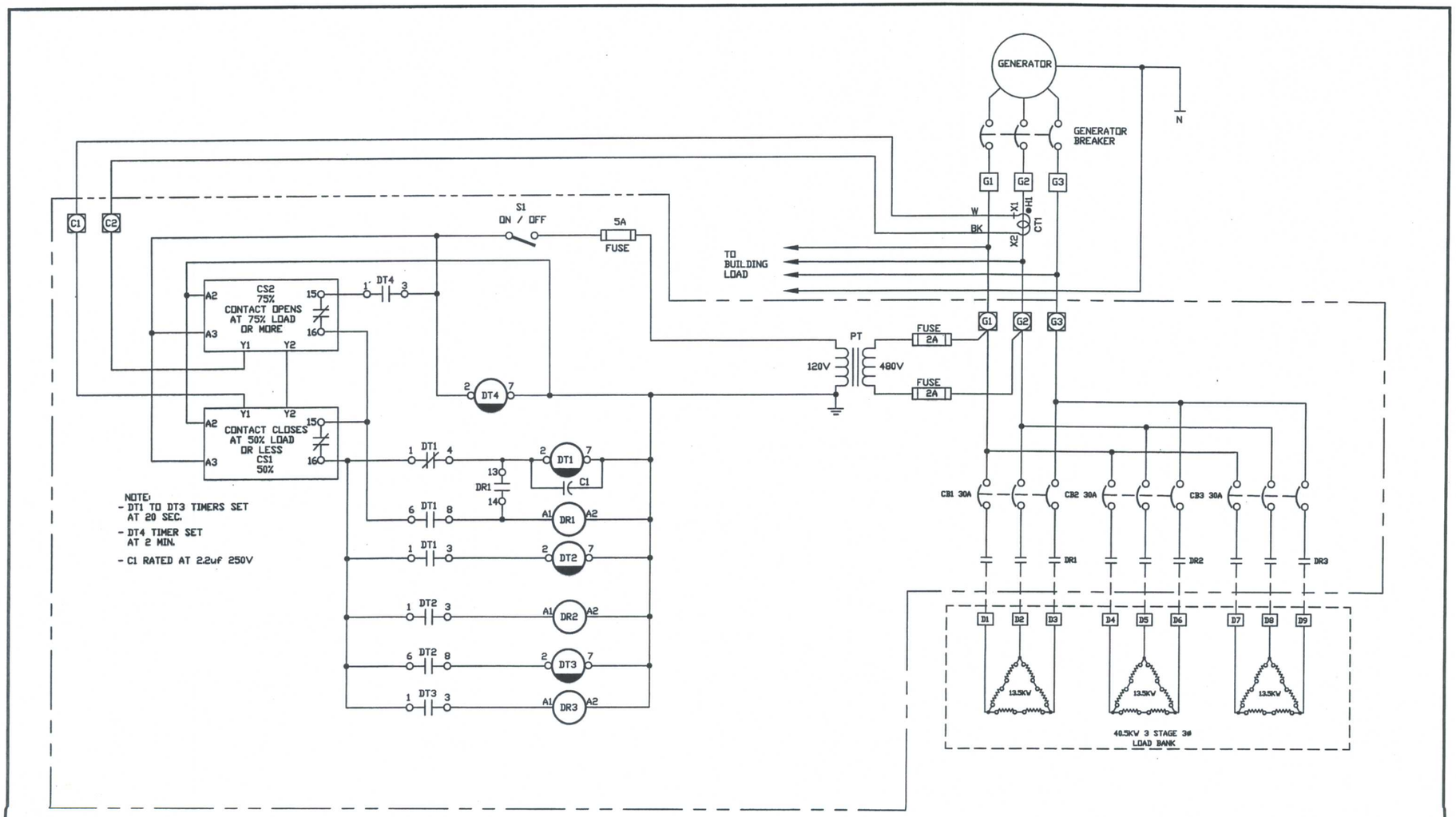

Tartan ENGINEERING

DRAWING REVIEW

REVIEW IS FOR GENERAL COMPLIANCE WITH CONTRACT DOCUMENTS. NO RESPONSIBILITY IS ASSUMED FOR CORRECTNESS OF DESIGN (IF REQUIRED OF THE VENDOR/CONTRACTOR), DIMENSIONS OR DETAILS.

- [x] NO EXCEPTIONS TAKEN PROCEED WITH CONSTRUCTION
- [ ] MAKE CORRECTIONS NOTED PROCEED WITH CONSTRUCTION
- [ ] REVISE AND RESUBMIT

BY _____ DATE 06-06-01

PROJ. NO. 336500 DATE RECEIVED May 25/06

Tartan ENGINEERING

DRAWING CHECK

Department	Circulate to	Initial	Date Received	Date Checked
Piping & Design	JK	JK	May 26/06	
Process	NF	NF	May 31	May 31
Mechanical	JB/GM			
Instrument	KB/BW	BW	May 31/06	
Systems		BW	June 1/06	
Electrical	JF	JRF	MAY 31/06	
Civil & Structural	AB			
Operations				
Project Engineer				
Project Manager	HT			

RETURN TO BOB.B. BY May 30/06

THIS DRAWING CONTAINS CONFIDENTAL INFORMATION OF A PROPRIETARY NATURE TO SIMMAX INC. REPRODUCTION, TRANSMISSION OR USE FOR ANY PURPOSE WITHOUT THE EXPRESS WRITTEN CONSENT OF SIMMAX INC. IS STRICTLY PROHIBITED.

APPROVED FOR PRODUCTION

CHANGES TO THIS DRAWING REQUIRE CUSTOMER RE-APPROVAL

CUSTOMER:
S/M CALGARY
HUSKY OIL OPERATIONS LTD.
06C254

NOTES:	
NO.	DESCRIPTION

DRAWN BY: R.DHANU
CHECKED BY:
DATE: 05/10/06

REVISIONS

NO.	DATE	BY	DESCRIPTION

SIMSON-MAXWELL

TITLE: SCHEMATIC DIAGRAM OF 40KW 3 STAGE LOAD BANK CONTROL 277/480V,3#-4W+G

SCALE:	DRAWING NO:	REV:	SIZE
N.T.S.	B-E5858-3	0	B