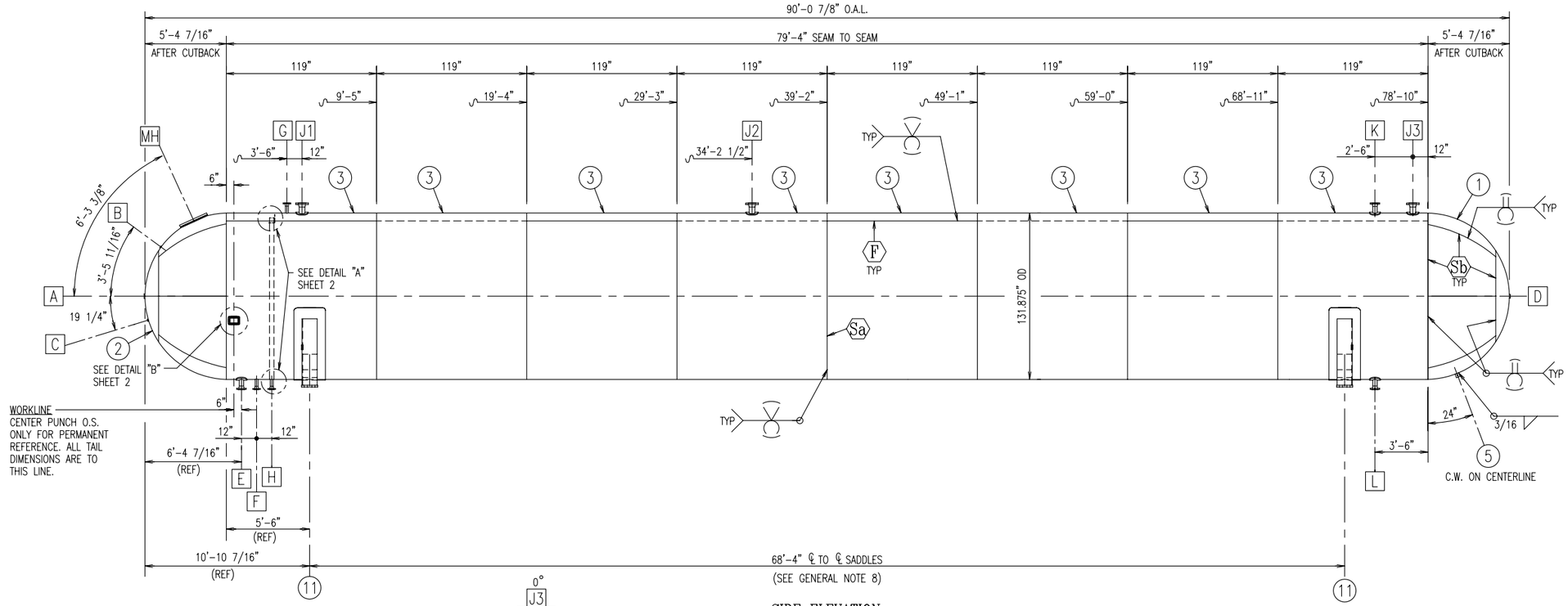

SIDE ELEVATION

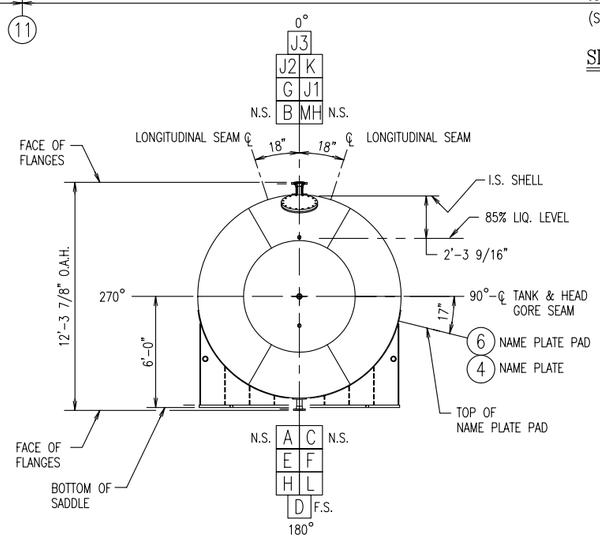

END VIEW

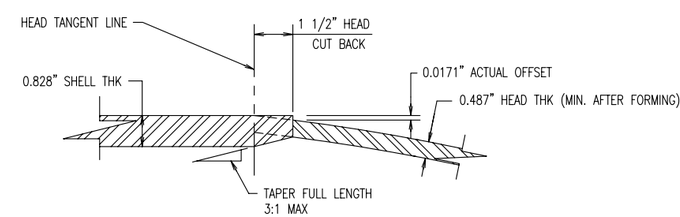

DETAIL OF HEAD TO SHELL JOINT

SEE FIGURE UW-13.1(M)

S-51141	MANWAY COVER		
S-51112	DIM TOLERANCES		
S-51022	WELD FIGURES		
S-50811	COUPLING W/ #54 HOLE		
S-50198	THERMOWELL		
SA-157	SADDLES		
S-40102	PIPE SUPPORT		
S-40100	GROUND LUG		
1713250003	MANWAY PAD	PA-1	NAMEPLATE PAD
1713010021	HEAD W/ FITTINGS	S-83618	BOLT TORQUE
1713010020	HEAD W/ END COUPLING	S-82661	MANWAY ASSEMBLY

REFERENCE DRAWING LIST

MARK	QTY	SIZE	DESCRIPTION	SERVICE	ITEM	PROJ	WELD	ATTACH. FIG.	GEN. NOTES
L	1	3"	150# RF WELD NECK FLG	BRIDLE	15, 16, 17	SEE DETAIL			9
K	1	3"	150# RF WELD NECK FLG	BRIDLE	15, 16, 17	SEE DETAIL			9
J	3	4"	300# RF WELD NECK FLG	RELIEF	12, 13, 14	SEE DETAIL			4, 9
H	1	2"	150# RF WELD NECK FLG	VAPOR	9, 10, 18, 19	SEE DETAIL			3, 5
G	1	2"	150# RF WELD NECK FLG	VAPOR	18, 19	SEE DETAIL			5
F	1	2"	150# RF WELD NECK FLG	FILL	18, 19	SEE DETAIL			5
E	1	3"	150# RF WELD NECK FLG	LIQUID OUT	15, 16, 17	SEE DETAIL			5, 9
D	1	2"	3000# HALF COUPLING	ROTARY GAUGE	1	3/4"	3/8	30	
C	1	3/4"	6000# FULL COUPLING	THERMOWELL	2, 10	3/4"	3/8	30	2
B	1	3/4"	6000# SPCL COUPLING	LIQ. LVL & PRESS. GA.	2	1/2"	3/8	30	1
A	1	2 1/2"	3000# HALF COUPLING	FLOAT GAUGE	2	3/4"	7/16	30	
MH	1	16"	RF PAD FLANGE	MANWAY	2, 9	3/4"	7/16	30	

SCHEDULE OF OPENINGS

X-RAY LEGEND

- (F) FULL
- (Sa) SPOT REQUIRED PER UW-11(a)(5)(b)
- (Sb) SPOT PER UW-11(b)

S/O MX-854851
MX-860017

CUSTOMER:
PLATINUM ENERGY SERVICES CORP.

REV	BY	DATE	REVISION
C	LH	3-7-07	ADDED MIN. THK AT HEAD.
B	LH	11-7-06	ADDED NOZZLES "J2" & "J3". ALSO, ADDED ADDITIONAL S/O.
A	LH	9-20-06	DELETED NOTES FROM THIS SHEET. REVISED OPENINGS "E"-"J". ADDED "K" & "L".

TRINITY CONTAINERS, LLC

THIS DRAWING CONTAINS CONFIDENTIAL AND PROPRIETARY INFORMATION OF TRINITY CONTAINERS, LLC. THE DRAWING IS THE PROPERTY OF TRINITY CONTAINERS, LLC AND IS LOANED FOR ENGINEERING REVIEW ONLY. THE DRAWINGS MAY NOT BE COPIED OR USED FOR ANY OTHER PURPOSE WITHOUT THE WRITTEN CONSENT OF TRINITY CONTAINERS, LLC AND SHALL BE RETURNED ALONG WITH ALL COPIES UPON DEMAND. © TRINITY CONTAINERS, LLC 2007

DRAWN	CNT	8-16-06
CHKD	LH	8-16-06
APPD	JCR	8-16-06
FILE NAME	TRIMCO	
LCN	CHKD: JCR	
WEIGHT		

TANK, HORIZONTAL STORAGE
131.875" OD
60,000 NOM WG, 250 PSI
FOR NON-CORROSIVE SERVICE

DRAWING NO:	SHEET	REV	SIZE
854851	1 OF 3	C	D

CONSTRUCTION NOTES

1. TANK CONFORMS TO THE 2010 EDITION, A11 ADDENDA OF THE ASME CODE FOR PRESSURE VESSELS, SECTION VIII DIVISION 1 AND NFPA 58 (2010 EDITION)
(TANQUE DISEÑADO DE ACUERDO CON LA ULTIMA EDICION Y ADENDA DEL CODIGO ASME SEC VIII DIV 1 (EDICION 2007, ADENDA: NO) Y NFPA 58 (2088 EDICION).
2. POSTWELD HEAT TREAT: NOT REQUIRED (HEAD SEGMENTS ARE HOT FORMED, NORMALIZED)
(RELEVADO DE ESFUERZOS: NO REQUERIDO (CABEZA FORMADO EN CALIENTE ANTES DE LA SOLDADURA, NORMALIZADO.))
3. RADIOGRAPH: X-RAY REQUIRED PER ASME CODE. (SEE LEGEND)
(RADIOGRAFIADO: VER LEYENDAS INDICADAS EN ESTE DIBUJO.)
4. JOINT EFFICIENCY: HEADS --- 85%, SHELL --- 100%
(EFICIENCIA DE LAS UNINES: CABEZAS --- 85% CUERPOS --- 100%)
5. CORROSION ALLOWANCE: HEADS --- 0, SHELL --- 0, NOZZLES --- 0.
(CORROSION PERMITIDA): CABEZAS: 0 CUERPOS --- 0 NOZZLES --- 0
6. MAXIMUM ALLOWABLE WORKING PRESSURE: 250 PSI AT 125°F: EXTERNAL: 9 PSI AT 125 F
(PRESION MAXIMA DE TRABAJO PERMITIDA: 250 PSI A 125° F, EXTERIOR: 9 PSI AT 125° F)
7. MAXIMUM PRESSURE NEW: 250 PSI AT 125°F LIMITED BY THE HEADS AND SHELL.
MDMT: -20°F AT 250 PSIG.
(PRESION MAXIMA NUEVO: 250 PSI A 125° F LIMITADA POR LAS CABEZAS Y CUERPO MDMT: 2° F A 250 PSIG.)
8. HYDROSTATIC TEST PRESSURE: 325 PSI (MIN). SHOP TO INSPECT VESSEL WHILE MAINTAINING TEST PRESSURE. AFTER HYDROSTATIC TESTING, INSIDE VESSEL SHALL BE CLEANED AND INSPECT TO ENSURE THAT THE VESSEL IS FREE OF DIRT, GREASE, DEBRIS, LOOSE MILL SCALE, WELD SPATTER, WATER, ETC. REPLACE MANWAY COVER, STUDS AND NUTS WITH NEW GASKET. TORQUE BOLTING PER DRAWING S-83618.
(PRESION DE PRUEBA HIDROSTATICA: 325 PSI (MIN). EL TALLER INSPECCIONARA EL RECIPIENTE MIENTRAS SE SOSTIENE LA PRESION DE PRUEBA. DESPUES DE LA PRUEBA HIDROSTATICA, EL INTERIOR DEL RECIPIENTE DEBERA SER INSPECCIONADO PARA ASEGURAR QUE EL RECIPIENTE ESTE LIBRE DE SUCIEDAD, GRASA, BASURA, LAMINACIONES, CHISPORROTEO DE SOLDADURA, AGUA, ETC. REEMPLAZAR LA TAPA DEL EPH, ESPARRAGOS Y TUERCAS CON UN NUEVO EMPARQUE USAR EL DIBUJO ESTANDAR DE TRINITY CONTAINERS, LLC S-83618, PARA TORQUE DE TORNILLOS)
9. MAXIMUM ALLOWABLE STRESS AT 125°F: HEADS -------- 20,000 PSI
(MAXIMO ESFUERZO PERMISIBLE A 125° F): SHELL -------- 20,000 PSI
CABEZAS: -------- 1,406 Kg/cm^2 (20,000 PSI)
CUERPO: -------- 1,406 Kg/cm^2 (20,000 PSI)
10. WELDING AND WELDING MATERIALS SHALL BE ACCORDING TO APPROVED TRINITY CONTAINERS, LLC PROCEDURES PER WELD MAP WM-104 & WM-109.
(SOLDADURA Y MATERIALES DE SOLDADURA DEBEN SER ACORDE A LOS PROCEDIMIENTOS APROBADOS POR TRINITY CONTAINERS, LLC POR WM-104 Y WM-109.
11. MAXIMUM WELD REINFORCEMENT HEIGHT PER UW-35 (d):
(MAXIMA ALTURA DE SOLDADURA DE REFUERZO UW-35 (d))
a. CIRCUMFERENTIAL SEAMS (CORDONES CIRCUNFERENCIALES):--- 3/16"
b. LONGITUDINAL SEAMS (CORDONES LONGITUDINALES): ------- 3/32"
c. HEAD TO SHELL SEAMS (CORDONES DE CABEZA A CUERPO):-- 3/32"
12. MAXIMUM ALIGNMENT TOLERANCE PER UW-33 (a)(b):
(MAXIMA TOLERANCIA DE ALINEAMIENTO SEGUN UW-33 (a)(b))
a. CIRCUMFERENTIAL SEAMS (CORDONES CIRCUNFERENCIALES):--- 3/16"
b. LONGITUDINAL SEAMS (CORDONES LONGITUDINALES): ------- 1/8"
c. HEAD TO SHELL SEAMS (CORDONES DE CABEZA A CUERPO):-- 1/8"
12. DIMENSIONS GIVEN ON A CURVED SURFACE ARE ALONG OUTSIDE CURVATURE.
(DIMENSIONES MOSTRADAS EN DESARROLLO, TOMADOS SOBRE LA SUP. EXTERIOR.)
13. LONGITUDINAL SEAMS ARE TO BE ALTERNATED.
(LOS CORDONES DE SOLDADURA LONGITUDINALES SE DEBERAN DE ALTERNAR.)
14. FLANGE BOLT HOLES TO STRADDLE NORMAL VESSEL CENTERLINES UNLESS OTHERWISE NOTED.
(LOS AGUJEROS DE LAS BRIDAS SE COLOCARAN A HORCAJADAS RESPECTO DE LA LINEA DE CENTROS DEL RECIPIENTE A MENOS QUE SE ESPECIFIQUE LO CONTRARIO.)
15. INSTALL WOOD OR STEEL PROTECTORS ON OPENINGS BEFORE SHIPMENT.
(SE DEBEN PROTEGER LAS BOQUILLAS CON: MADERA Y/O ACERO ANTES DE EMBARQUE.)
16. PROTECT MACHINED SURFACES WITH A RUST PREVENTIVE BEFORE SHIPMENT.
(PROTEGER SUPERFICIES MAQUINADAS CON UN ANTIOXIDANTE.)
17. DIMENSIONAL TOLERANCES PER TRINITY CONTAINERS, LLC STANDARD DWG. S-51112.
(TOLERANCIAS DIMENSIONALES DE ACUERDO A LOS ESTANDARES DE TRINITY CONTAINERS, LLC DIBUJO: S-51112)
18. VESSEL FINISH:
PRIMER: BLAST EXTERIOR PER SSPC-SP6 AND APPLY ONE COAT OF SHERWIN-WILLIAMS B67W45 EPOXY PRIMER 4.0 TO 6.0 MILS D.F.T. PROTECT FLANGE FACES.
FINISH: APPLY ONE COAT OF SHERWIN-WILLIAMS ACRYLIC POLYURETHANE ACROLON 218 HS, B65-600, 4.0 TO 6.0 MILS D.F.T. (ULTRA WHITE)
(PINTURA DEL RECIPIENTE):
PRAIMER: LIMPIEZA POR MEDIOS MECANICOS HASTA ALCANZAR UNA CALIDAD SSPC-SP6 Y APLICAR APLICAR UNA CAPA DE PRIMARIO EPOXICO B67W45 A UN ESPESOR DE 4.0 A 6.0 MILESIMAS DE PELICULA SECA. PROTEGER LAS FRENTE DEL BRIDAS.
ACABADO: APLICAR UNA CAPA DE SHERWIN-WILLIAMS ACRYLIC POLYURETHANE ACROLON 218 HS, B65-600 DE 4.0 A 6.0 MILESIMAS DE PELICULA SECA (BLANCO ULTRA).
19. ESTIMATED WEIGHT VESSEL: 106,969 LBS.
(PESO ESTIMADO: 106,969 LBS. (48521.13 Kg)
20. VESSEL IS EXEMPT FROM IMPACT TESTING PER UCS-66 (a), (b), (c), & UG-20 (f).

GENERAL NOTES

1. OPENING "B": 1713240001 COUPLING INSTALLED WITH NPT OUTSIDE HEAD. STEEL DIE STAMP "85%" ALONGSIDE OPENING "B" AS SHOWN.
(BOQUILA "B": COLOCAR EL COPLE S-50811 CON LA CUERDA AFUERA DE LA CABEZA. MARCAR " 85% " EN LA BOQUILLAS B (CON LETRAS DE GOLPE))
2. OPENING "C": FURNISH WITH A THERMOWELL FOR 1/2" NPT THERMOMETER.
(BOQUILLA "C": SUMINISTRAR UN TERMOCOPLE PARA TERMOMETRO DE 1/2" NPT)
3. OPENING "H": FURNISH WITH PIPE AS SHOWN IN SIDE ELEVATION.
(BOQUILLA "H": SUMINISTRAR UNA TUBERIA INTERNA COMO SE MUESTRA EN LA VISTA ELEVACION.)
4. OUTSIDE SURFACE AREA IS 3,112 SQ. FT., MINIMUM RELIEF REQUIRED FOR LPG IS 39,239 SCFM/AIR.
(SUPERFICIE SUJETA A PRESION 3,112 SQ. FT., MINIMO DESFOGUE REQUERIDO PARA GLP ES 39,239 SCFM/AIR.)
5. OPENINGS FOR INLET AND OUTLET ARE TO BE STEEL DIE STAMPED "V" FOR VAPOR AND "L" FOR LIQUID ON THE SHELL ADJACENT TO THE OPENING TO DESIGNATE WHETHER THEY COMMUNICATE WITH THE VAPOR OR LIQUID SPACE. THIS IS NOT REQUIRED FOR MANWAY, GAUGE, LL-PG, THERMOWELL OR RELIEF OPENINGS.
(MARCAR CON UNA LETRA "L" LAS BOQUILLAS QUE SE COMUNICAN A LA ZONA DE LIQUIDO Y CON UNA LETRA "V" LAS QUE SE COMUNICAN A LA ZONA DE VAPOR. EL MARCADO NO ES REQUERIDO PARA LA EPH, MEDIDOR, LL-PG, TERMOCOPLE O BOQUILLAS PARA VALVULAS DE SEGURIDAD.)
6. ABRASIONS TO THE COATING(S) DUE TO SHIPPING, HANDLING, AND/OR UNLOADING ARE THE RESPONSIBILITY OF THE BUYER TO CORRECT IN THE FIELD AND NOT INCLUDED UNDER THE TRINITY CONTAINERS, LLC WARRANTY STATEMENT.
(LOS DAÑOS A LA PINTURA OCASIONADOS POR EL EMBARQUE, MANEJO Y DESCARGA E S RESPONSABILIDAD DEL COMPRADOR LA CORRECIÓN EN CAMPO DE ESTOS DEFECTOS NO ESTAN INCLUIDOS EN LA GARANTIA DE TRINITY CONTAINERS, LLC)
7. STANDARD DOCUMENT/DATA NOTEBOOK IS REQUIRED.
(SE REQUIEREN ESTANDAR DOCUMENTOS Y/O DATA NOTEBOOK.)
8. PROVIDE SADDLES PER DRAWING SA-157, WELDED IN PLACE.
(EL TALLER DEBERA SUMINISTRAR LAS SILLETAS SOLDADAS AL RECIPIENTE SEGUN EL DIBUJO SA-157.)
9. NOZZLE REINFORCING PADS MUST BE LEAK TESTED AT 15 PSIG USING QS-LP-5. ALL WELDS BOTH INSIDE AND OUTSIDE OF THE VESSEL SHALL BE TESTED. PLUG TEST HOLES WITH PAINTABLE SILICONE AFTER HYDROTEST.
(LOS PARCHES DE REFUERZO DEBEN SER PROBADOS NEUMATICAMENTE A 15 PSIG DE ACUERDO A QS-LP-5 TODAS LAS SOLDADURAS PARCHE-CUERPO EXTERIOR, PARCHE-TUBO EXTERIOR Y TUBO-CUERPO INTERIOR DEL RECIPIENTE DEBEN SER VERIFIACOS QUE NO HAYA FUGAS, TAPAR LOS BARRENOS TESTIGOS CON SILICON DESPUES DE LA PRUEBA HIDROSTATICA.)
10. ALL REINFORCING PADS ARE ONE PIECE. SPLIT REPADS ARE NOT ALLOWED.
(TODOS LOS PARCHES DE REFUERZO SON DE UNA PIEZA. LA SEPARACION ES LA PARCHE DE REFUERZO NO DEBEN SER UTILIZADOS.)
11. VESSEL SERVICE IS LPG.
(EL SERVICIO DEL RECIPIENTE ES GLP.)
12. SADDLE SUPPORTS CONFORMS TO NBC CANADA 1995, VELOCITY SEISMIC ZONE 1, ACCELERATION SEISMIC ZONE 0 AND WIND EXPOSURE B.
(LAS SILLETAS PAPA SOPORTES ESTAN CONFORME A NBC CANADÁ 1995, A LA ZONA SÍSMICA 1 DE LA VELOCIDAD, A LA ZONA SÍSMICA 0 DE LA ACELERACIÓN Y A LA EXPOSICIÓN de VIENTO B.)
13. WELD ATTACHMENT FIGURE DETAILS PER TRINITY CONTAINERS, LLC STANDARD DWG. S-51022.
(DETALLES DE UNIONES SOLDADAS PARA ESTANDAR DE TRINITY CONTAINERS, LLC QUE DIBUJO S-51022.)
14. SHOP TO VERIFY ROUNDNESS OF VESSEL SHELL PER UG-80 (b)(1) AND (2).
(EL TALLER VERIFICARA LE REDONDEZ DEL RECIPIENTE DE ACUERDO A UG-80 (B) (1) Y (2)).

MATERIAL SPECIFICATIONS

HEADS (CABEZAS): ---------- SA516-70N
SHELL (CUERPOS): ---------- SA516-70
MANWAY: A. FLANGE (BRIDA): ---------- SA516-70N OR SA105
(E.P.H.:) B. BLIND (CIEGA): ---------- SA516-70
NOZZLE: A. WELD-NECK FLANGE (BRIDA WNRF) --- SA105
(BOQUILLAS) B. PIPE NECK (TUBERIA CUELLO) ------ SA106-B
C. REPADS (PARCHE DE REFUERZO) ---- SA516-70
COUPLINGS (COPLES): ---------- SA105
PRESSURE BOLTING: (TORNILLERIA A PRESION):
A. STUDS (ESPARRAGOS) ---------- SA193-B7
B. NUTS (TUERCAS) ---------- SA194-2H
GASKETS (EMBARQUES): ---------- COMPRESSED FIBER (NON-ASBESTOS) (TEADIT NA-1001 OR EQUAL) (FIBRA COMPRIMIDA (LIBRE DE-ASBESTOS)) (TEADIT NA-1001 O EQUIVALENTE)
INTERNAL PIPE (TUBERIA INTERNA): --------- P-1, A53F
LUGS OR CLIPS (OREJAS Y/O CLPIS): -------- P-1, A36
SADDLE (SILLETAS): ---------- A36 OR SA36
SADDLE WEAR PAD (PARCHE P/ SILLETAS): ------ SA516-70
EXTERNAL PADS (PARCHE EXTERNA): --------- SA36

PARTS LIST

ITEM	PART NO.	QTY	DESCRIPTION
1	1713010308	1	HEAD, BLANK, HEMI, SEG, 0.487" MIN THK X 131.875" OD
2	1713010309	1	HEAD, FITTED, HEMI, SEG, 0.487" MIN THK X 131.875" OD
3	SR-20-05	8	SHELL RING, 0.828" THK. X 119" X 411 11/16"
4	S-1281	1	NAME PLATE S.S.
5	S-40100	1	GROUNDING LUG
6	PA-1-02	1	PAD, NAME PLATE
7	S-50198-01	1	THERMOWELL (SEE GENERAL NOTE 2)
8	S-82661	1	MANWAY COVER ASSEMBLY
9	S-40102	1	CLIP, 3" PIPE
10	S-83800-47	1	PIPE, 3" SCH. 40 X 127 1/2" LG.
11	SA-157-02	2	SADDLES
12	082-76535	3	FLANGE, 4"-300# RF, WELD NECK (SCH. 80 BORE)
13	S-83823-58	3	PIPE, 4" SCH. 80 X 5 3/4" LG.
14	PA-100-02	3	REPAD, 3/4" THK X 4 3/4" ID X 9 3/4" OD
15	082-22681	3	FLANGE, 3"-150# RF, WELD NECK (SCH. 80 BORE)
16	S-83825-66	3	PIPE, 3" SCH. 80 X 6 1/4" LG.
17	PA-100-01	3	REPAD, 3/4" THK X 3 3/4" ID X 8 3/4" OD
18	082-22405	3	FLANGE, 2"-150# RF, WELD NECK (SCH. 160 BORE)
19	S-83860-44	3	PIPE, 2" SCH. 160 X 6 11/16" LG.
20	150-01368	30	PRIMER, GALS (SEE CONSTRUCTION NOTE 18)
21	039-37429-SE-02	30	FINISH, GALS (SEE CONSTRUCTION NOTE 18)
22	185-01288	1	SHIPPING PROTECTORS (SEE CONSTRUCTION NOTE 15)
23	PA-113-06	2	PAD, SUPPORT
24	PA-113-07	4	PAD, SUPPORT
25	S-84842-01	2	WEAR PLATE 1/2" X 25" X 190"

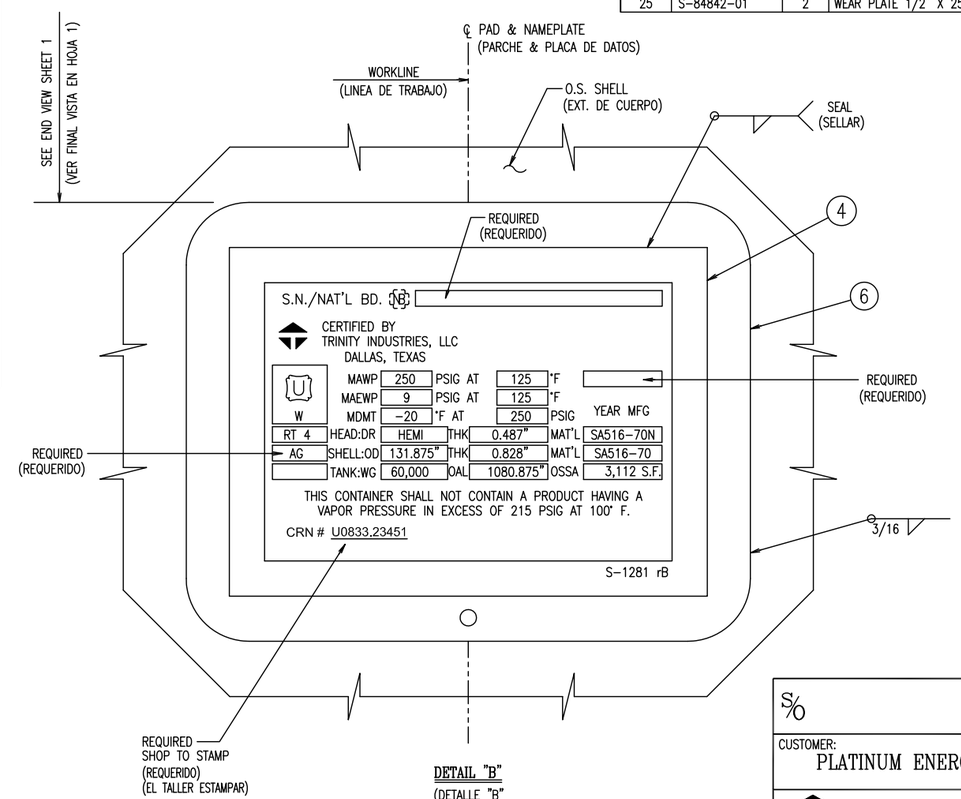

REV	BY	DATE	REVISION
C	LH	3-7-07	ADDED GEN. NOTES 10 & 11.
B	LH	11-7-06	REV QTY OF 12-14. ADDED 23 & 24 AND ADDITIONAL S/O.
A	LH	9-20-06	CORRECTED PARTS LIST & REDRAWN AS SHOWN.

S/O

CUSTOMER:
PLATINUM ENERGY SERVICES CORP.

TRINITY CONTAINERS, LLC

THIS DRAWING CONTAINS CONFIDENTIAL AND PROPRIETARY INFORMATION OF TRINITY CONTAINERS, LLC. THE DRAWING IS THE PROPERTY OF TRINITY CONTAINERS, LLC AND IS LOANED FOR ENGINEERING REVIEW ONLY. THE DRAWINGS MAY NOT BE COPIED OR USED FOR ANY OTHER PURPOSE WITHOUT THE WRITTEN CONSENT OF TRINITY CONTAINERS, LLC AND SHALL BE RETURNED ALONG WITH ALL COPIES UPON DEMAND. © TRINITY CONTAINERS, LLC 2007

DRAWN	CNT	8-16-06
CHKD	LH	8-16-06
APPD	JCR	8-16-06
FILE NAME	eB	
LCN	CHKD: JCR/EM	
WEIGHT		

TANK, HORIZONTAL STORAGE
131.875" OD
60,000 NOM WG, 250 PSI
FOR NON-CORROSIVE SERVICE

DRAWING NO:	SHEET	REV	SIZE
854851	2 OF 3	C	D

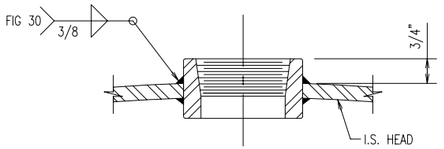

DETAIL OF OPENING "D"

(2"-3000# HALF COUPLING)

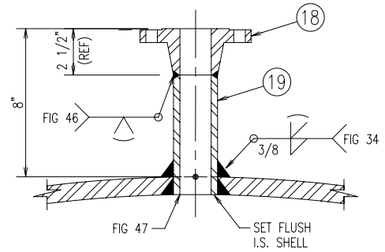

DETAIL OF OPENING "G"

(2"-150# RFWN)

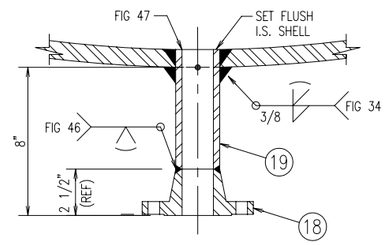

DETAIL OF OPENING "F"

(2"-150# RFWN)

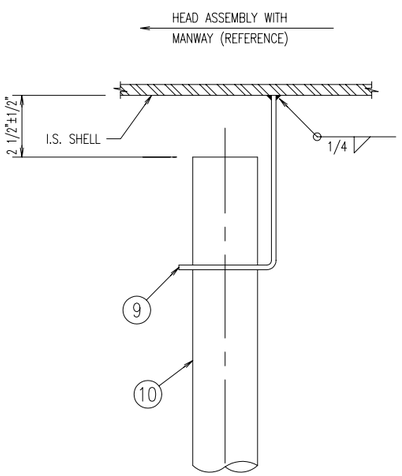

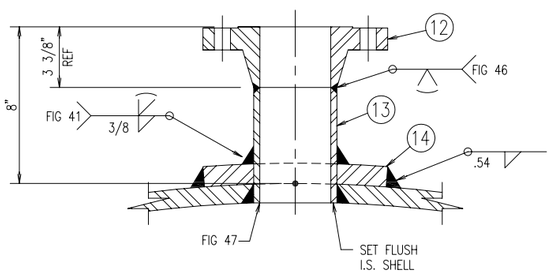

DETAIL OF OPENINGS "J1", "J2" & "J3"

(4"-300# RFWN)

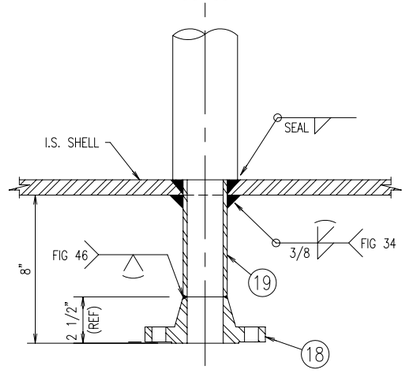

DETAIL OF OPENING "H"

(2"-150# RFWN)

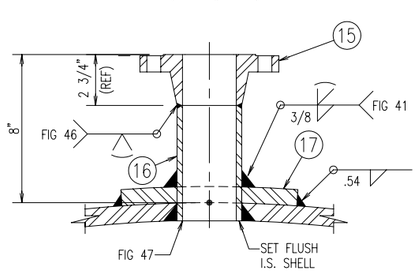

DETAIL OF OPENING "K"

(3"-150# RFWN)

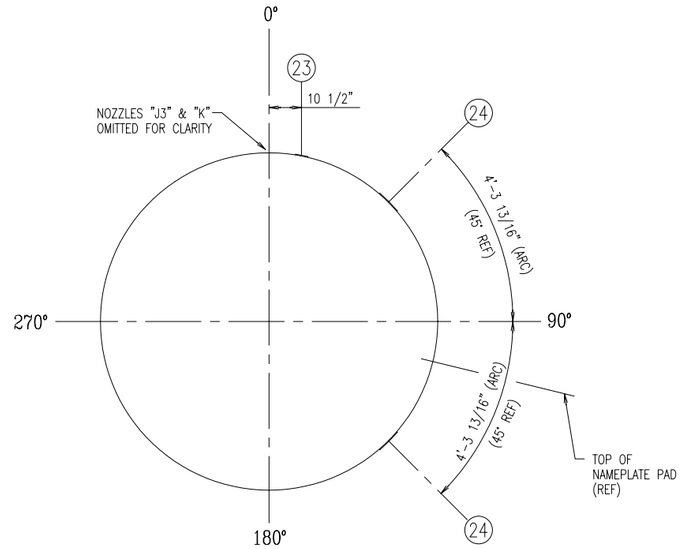

END VIEW

LOOKING FROM W.L. END

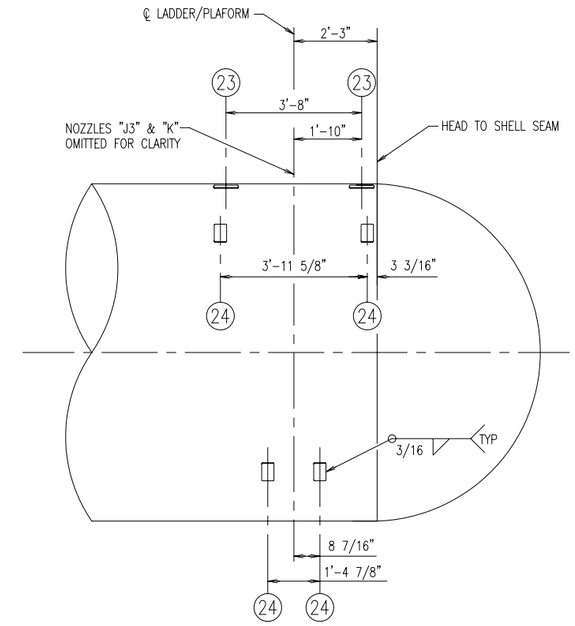

PARTIAL SIDE ELEVATION

LADDER/PLATFORM PAD LOCATIONS

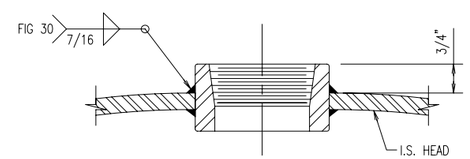

DETAIL OF OPENING "A"

(2 1/2"-3000# HALF COUPLING)

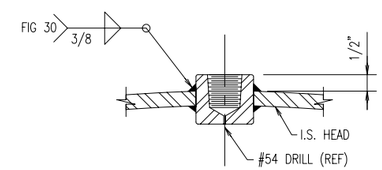

DETAIL OF OPENING "B"

(3/4"-6000# SPCL COUPLING)

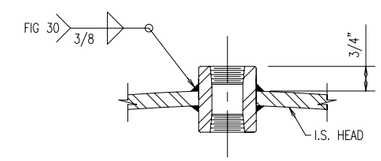

DETAIL OF OPENING "C"

(3/4"-6000# FULL COUPLING)

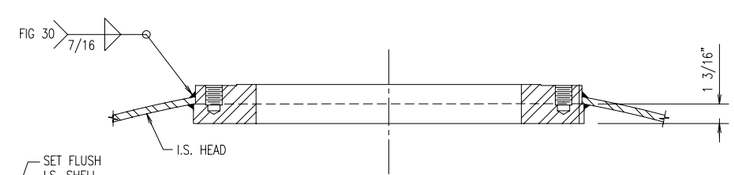

DETAIL OF OPENING "MH"

(16"-150# RF PAD FLANGE)

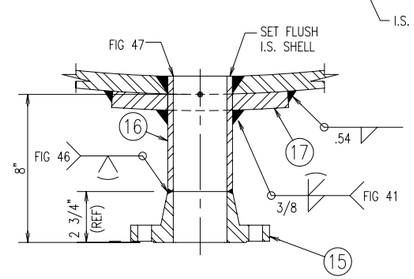

DETAIL OF OPENINGS "E & L"

(3"-150# RFWN)

REV	BY	DATE	REVISION
C	LH	7-5-07	REV REPAD TO SHELL WELD FROM .50" TO .54".
B	LH	3-7-07	ADDED DETAILS "A", "B", "C", "D" & "MH".
A	LH	11-7-06	ADDED OPENINGS "J2" & "J3" AND ADDITIONAL S/O. ADDED LADDER/PLATFORM PAD LOCATIONS.

S/O MX-854851
MX-860017

CUSTOMER:
PLATINUM ENERGY SERVICES CORP.

TRINITY CONTAINERS, LLC

THIS DRAWING CONTAINS CONFIDENTIAL AND PROPRIETARY INFORMATION OF TRINITY CONTAINERS, LLC. THE DRAWING IS THE PROPERTY OF TRINITY CONTAINERS, LLC AND IS LOANED FOR ENGINEERING REVIEW ONLY. THE DRAWINGS MAY NOT BE COPIED OR USED FOR ANY OTHER PURPOSE WITHOUT THE WRITTEN CONSENT OF TRINITY CONTAINERS, LLC AND SHALL BE RETURNED ALONG WITH ALL COPIES UPON DEMAND. © TRINITY CONTAINERS, LLC 2007

DRAWN	CNT	9-20-06
CHKD	LH	9-20-06
APPD	JCR	9-20-06
FILE NAME	TRIMCO	
LCN	CHKD: JCR	
WEIGHT		

TANK, HORIZONTAL STORAGE
131.875" OD
60,000 NOM WG, 250 PSI
FOR NON-CORROSIVE SERVICE

DRAWING NO:	SHEET	REV	SIZE
854851	3 OF 3	C	D