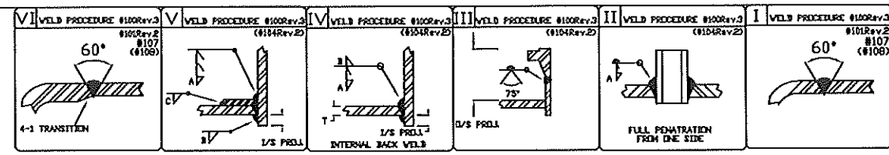

NOZZLE SCHEDULE

MARK	SIZE	RATING	TYPE	SERVICE	NOZZLE BORE	* SEE NOTES ITEM	PROJ'N I/S	PROJ'N O/S	WELD DETAIL	WELD SIZE A	WELD SIZE B		REMARKS
C1	50mm	CL3000	HALF CPLG.	OUTLET	~	1	NONE	50mm	II	10	0		
C2	25mm	CL3000	HALF CPLG.	INSPECTION	~	2	NONE	25mm	II	10	0		
C3	21.3mm	CL3000	HALF CPLG.	DRAIN	~	3	NONE	25mm	II	10	0		
C4	25mm	CL3000	HALF CPLG.	INLET	~	4	NONE	25mm	II	10	0		

BILL OF MATERIALS

ITEM	QTY.	DESCRIPTION	MAT'L
1	1	ND150 X 610mm LG STD. WALL SMLS PIPE (BBE) NOM:7.11mm	SA-53-B
2	2	150 STD. WALL PIPE CAPS NOM: 7.11mm MIN: 6.0mm	SA-234-WPB

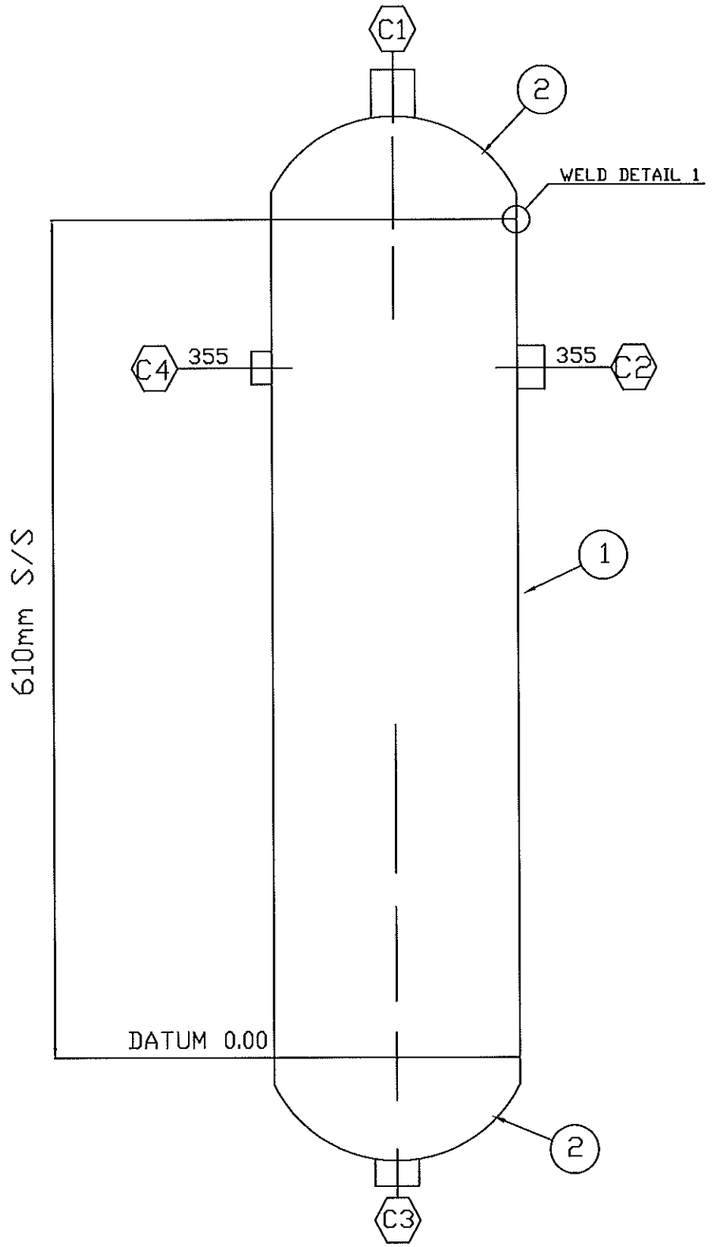

ELEVATION

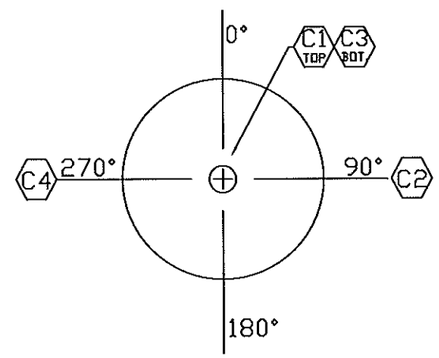

ORIENTATION

GENERAL NOTES

DESIGN DATA

DESIGN & FABRICATE TO ASME SECTION VIII.DIV.I.2010 EDITION 2011a Addenda
DESIGN PRESSURE: 6725 KPA (975 PSI) — DESIGN TEMP: 66°C (150°F)
HYDROTEST: 10088 KPA (1465 psi) — M.D.M.T.: -29°C (-20°F)
RADIOGRAPHY-NONE — LONG'L JOINT EFF: 100% SMLS
P.W.H.T: NONE — CORR. ALLOWANCE: NONE
M.A.W.P: 6725 KPA (975 PSI) — LIMITED BY: DESIGN
HEADS: SA-234-WPB MIN: 6.0MM
SHELL: SA-53-B NOM: 7.11MM
WELD FITTINGS: SA-234-WPB
COUPLINGS (T.O.L.): SA-105
INTERNALS: SA-36

SHIPPING WT: 15.5 KG. (EMPTY)
CAPACITY: .0114 m^3 or (.4022 ft^3)

PAINT: ONE COAT PRIMER

BOILER BRANCH APPROVAL STAMP

WARNING!
THIS DRAWING AND THE DESIGN IT COVERS ARE CONFIDENTIAL AND SHALL NOT BE DISCLOSED TO OTHERS OR REPRODUCED IN ANY MANNER OR USED FOR ANY PURPOSE WHATSOEVER EXCEPT BY WRITTEN CONSENT OF RJV GASFIELD SERVICE LTD.

RJV
GAS FIELD SERVICES
4901 BRUCE RD VEGREVILLE, ALTA
T9C-1C3
PHONE (780) 632-7774
FAX (780) 632 6820

REFERENCE DWG.	
DWG. #	DESCRIPTION

REVISIONS	
#	DESCRIPTION

ENGINEERING	
DWN BY	Wes Markowsky
DATE	July 29,2011
SCALE	N.T.S
CHK'D BY	
APP'D BY	

TITLE: DN 150 DRIP BOTTLE FITTING

DWG. # KMF1-88	REV. # 1	SHEET 1 OF 1