K-130
VRU COMPRESSOR
FULLER ROTARY VANE
MODEL #C70
STANDARD CAST IRON

KE-131
NATURAL GAS DRIVER
ARROW VRG330U, 68 HP
NATURALLY ASPIRATED

V-135
HORIZONTAL SUCTION SCRUBBER
16"OD x 60"SS, 1/8" C.A.
MAWP: 200PSIG @ 300'F
MDMT: -20'F @ 200 PSI
AB/SASK REGISTRATION
CRN: U1084.2

P-136
CONDENSATE PUMP
SANDPIPER 1" NPT
G1FB1ABTXNSX00
GAS OPERATED

P-132
CIRCULATION PUMP
VIKING GG190
6 USGPM @ 1000 RPM

E-139/140
PRE / AFTER COOLER
AIR-X-LIMITED COOLER
MODEL# 54EF-R
MAWP: 215PSI @ 350/--40'F
AB/SASK REGISTRATION
CRN: U0711.23/U0712.23

E-134
AIR TO GLYCOL COOLER
AIR-X-LIMITED COOLER
MODEL# 54EF-R
MAWP: 14PSI @ 300/-20'F

PSV-130
1.5"X2" RF 150#
SET@50 PSIG, ASSUMED 0 PSIG BACK PRES.
FOR BLOCKED FLOW

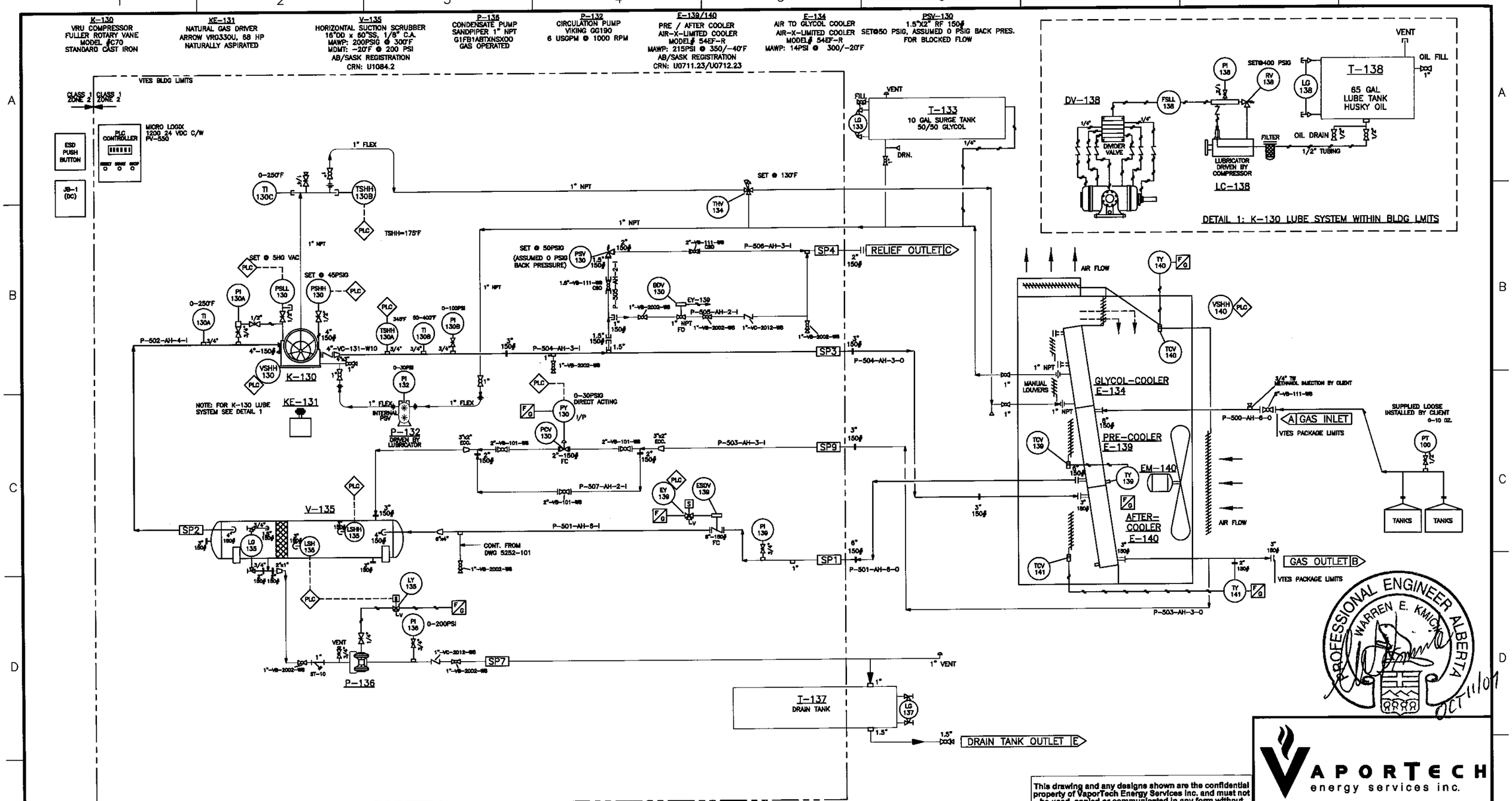

PROFESSIONAL ENGINEER ALBERTA
WARREN E. KMICH
OCT 11/07

This drawing and any designs shown are the confidential property of VaporTech Energy Services Inc. and must not be used, copied or communicated in any form without the express written consent of VaporTech.
2007 VaporTech Energy Services Inc.

Notes:
1: CORROSION ALLOWANCE: 0.0625"
2: NO PWHT.
3: 10% MINIMUM OF ALL BUTT WELDS MUST BE X-RAYED.
4: ALL PIPE WILL BE CONSTRUCTED FROM SA-106B
5: ALL FLANGES WILL BE CONSTRUCTED FROM SA-105N
6: WELD PROCEDURE REGISTRATION NUMBER: WPL-796.2
7: THREADED FITTING: SA105N
8: WELDED FITTING: A234GR WPB

REF.	FUNCTION	SIZE RATING	PRO.	PRES.	TEMP.
A	GAS INLET	6" 150#RFWN			
B	GAS OUTLET	3"-150#RFWN			
C	RELIEF OUTLET	2"-150# RFWN			
E	DRAIN TANK OUTLET	1"-3000# NPT UNION			

REV	BY	DESCRIPTION	DD-MM-YY	CHK'D
2	LQ	AS BUILT	25/08/07	SA
1	LQ	ISSUED FOR CONSTRUCTION	20/08/07	SA

VAPORTECH energy services inc.

HUSKY ENERGY
c/o IMV Projects

TANK VRU
PROJECT: 5252-(A/B/C/D/E)
LSD: 11-36-49-20-W3M

P&ID

DWG REVISION	PRJ. LSD.	PRJ. SEQ.	DWG. NO.	REV.
DEC 19/06	DB	.	5252-100	2

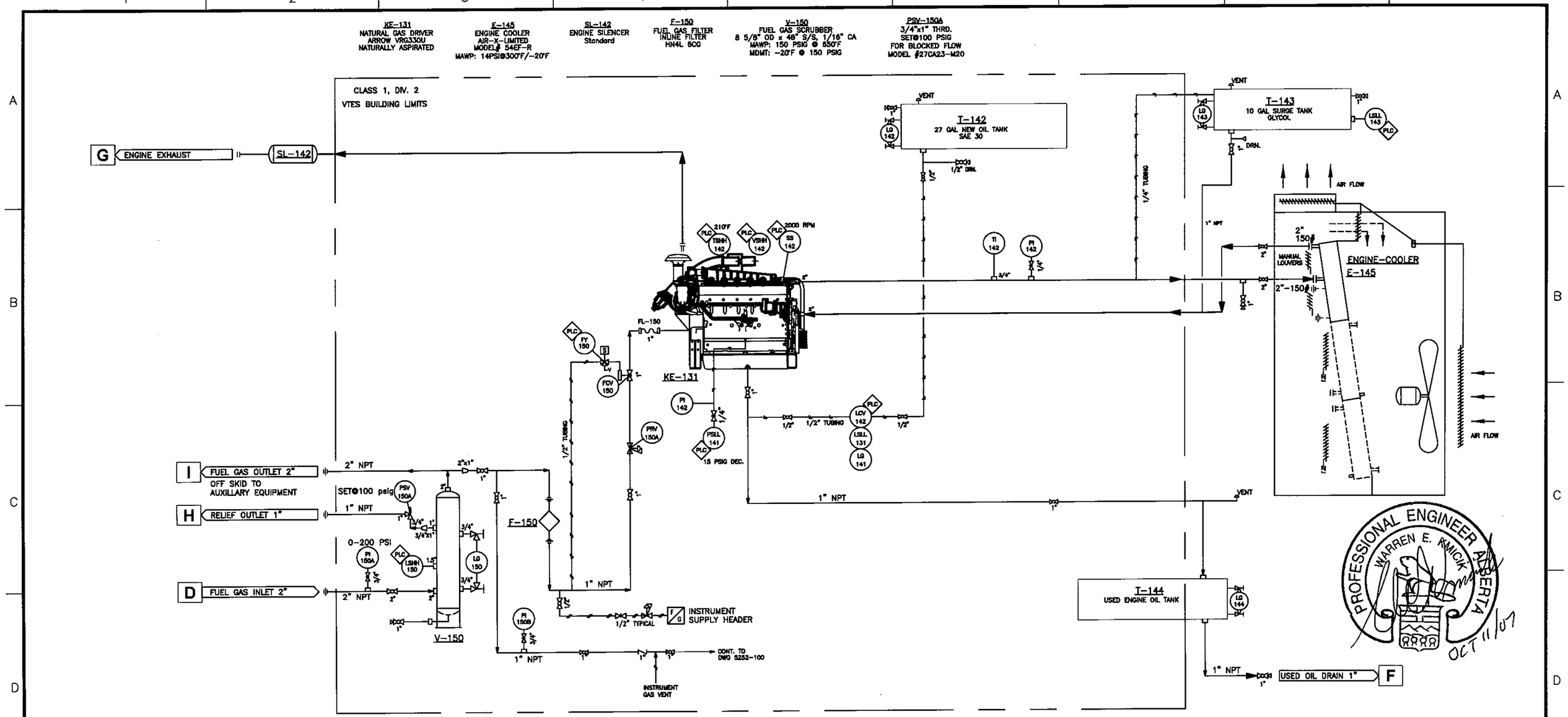

This drawing and any designs shown are the confidential property of VaporTech Energy Services Inc. and must not be used, copied or communicated in any form without the express written consent of VaporTech.
2007 VaporTech Energy Services Inc.

REF.	FUNCTION	SIZE RATING	PROJ.	PRES.	TEMP.
D	FUEL GAS INLET	2" CL3000 NPT			
F	USED OIL DRAIN	1" CL3000 NPT			
G	ENGINE EXHAUST	–			
H	FUEL GAS SCRUBBER RELIEF	1" CL3000 NPT			
I	FUEL GAS OUTLET	2" CL3000 NPT			

REV	BY	DESCRIPTION	DD-MM-YY	CHK'D

REV	BY	DESCRIPTION	DD-MM-YY	CHK'D
2	LQ	AS BUILT	25/08/07	SA
1	LQ	ISSUED FOR CONSTRUCTION	21/08/07	SA

VAPORTECH energy services inc.

HUSKY ENERGY
c/o IMV Projects

TANK VRU
PROJECT: 5252-(A/B/C/D/E)
LSD: 11-36-49-20-W3M

P&ID Auxiliary

DATE EXPORTED	PROJ. ENGR.	PROJ. MGR.	DWG. NO.	REV.
26/01/07	SA	.	5252-101	2