Date Saved: 2010-04-07 10:56am

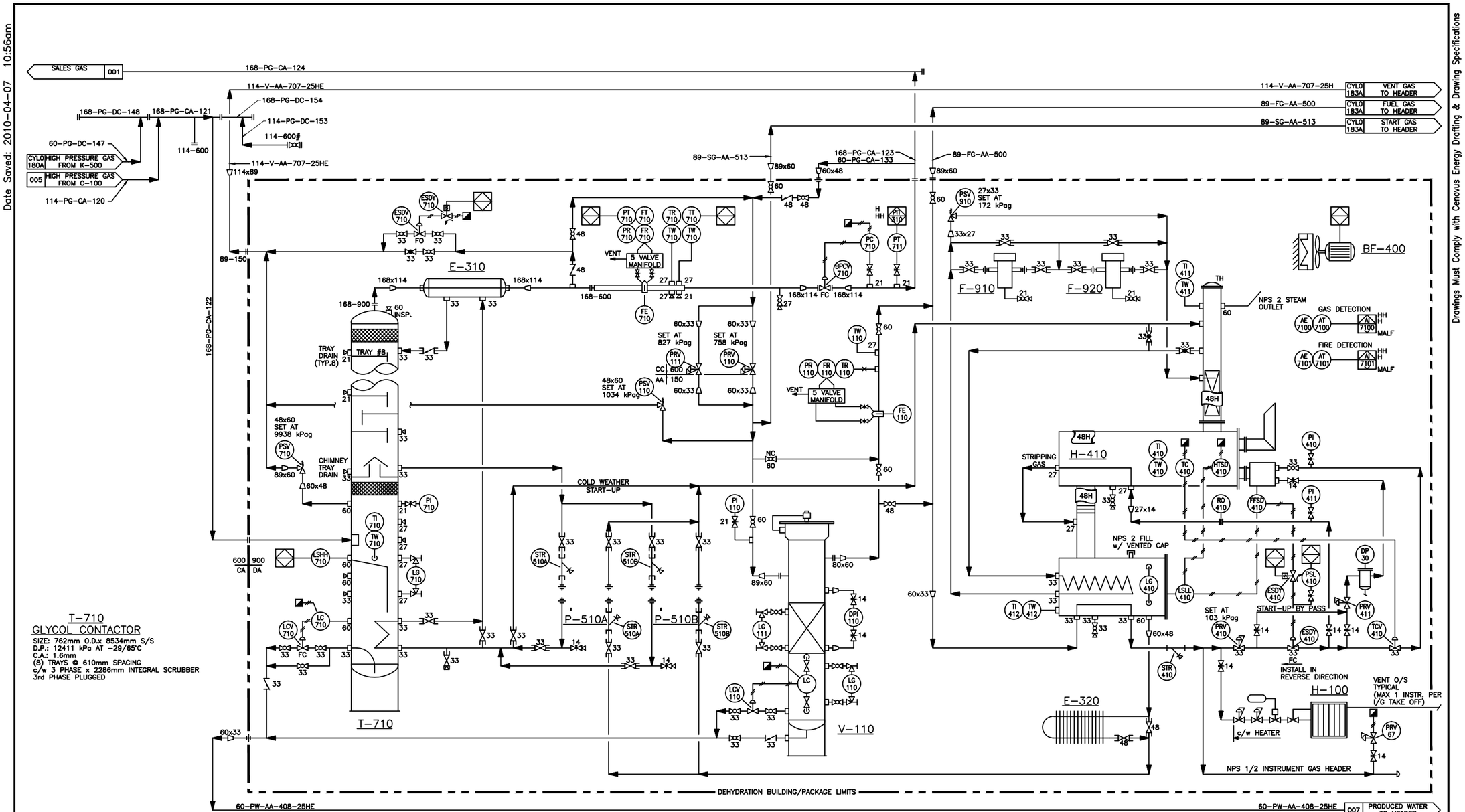

T-710
GLYCOL CONTACTOR

SIZE: 762mm O.D.x 8534mm S/S
D.P.: 12411 kPa AT -29/65°C
C.A.: 1.6mm
(8) TRAYS @ 610mm SPACING
c/w 3 PHASE x 2286mm INTEGRAL SCRUBBER
3rd PHASE PLUGGED

E-310
GAS/GLYCOL EXCHANGER

SIZE: 114.3mmx168.3mmx3048mm LG.
D.P.: 9928 kPa AT -29/54°C

P-510A/B
GLYCOL PUMP

MAKE/MODEL: (2) KIMRAY #21015 PV
CAP.: 210 GPH
MAWP: 10342 kPa MWP

F-910
GLYCOL FILTER

MAKE/MODEL: CUNO 182 GLYCOL FILTER
25 MICRON CARTRIGDE
D.P.: 1724 kPa AT -29/121°C

H-100
BUILDING HEATER

DUTY: 24,000 BTU/HR x P.CATALYTIC
w/ PROTECTIVE GRILL
100% SAFETY SHUT-OFF
TEMPERATURE CONTROL
MOTOR: 120V A.C. START

VENT EXHAUST TO OUTSIDE

H-410
GLYCOL RECONCENTRATOR

MAKE/MODEL:ALCO MODEL #GR375KR210
762mm O.D.x2413mm LG REBOILER
610mm O.D.x1880mm LG SURGE TANK
273mm O.D. FIRETUBE
273mm O.D. HIGH STACK
324mm O.D.x3048mmSTILL COLUMN
219mm O.D.x1016mm STRIPPING COLUMN
300,000 BTU/HR x 273 FLAME ARRESTOR

BF-100
EXHAUST FAN

MAKE: WALL MOUNTED
MODEL: ENER-TECH MODEL ET12-1
12 ACPH: 1100 CFM
DUTY: 1/4 H.P. 1/60/120V AC
MOTOR: X.P.

F-920
CHARCOAL FILTER

MAKE/MODEL: CUNO 182 CHARCOAL FILTER
c/w CHARCOAL CARTRIGDE
D.P.: 1724 kPa AT-29/121°C

E-320
AIR/GLYCOL HEAT EXCHANGER

SIZE: 38mm O.D.x1219mm LG
6-PASS
SCH. 40 FINTUBE

SEGMENT ENGINEERING
OIL & GAS EPCM SERVICES

REFERENCE DRAWINGS	DWG. NO.
.	.
.	.
.	.
.	.
.	.
.	.

CAUTION : READ BEFORE EXCAVATION
ALL EXCAVATIONS MUST BE CARRIED OUT AS PER Cenovus Energy Inc. "GROUND DISTURBANCE PRACTICES"

NO.	DATE	PROJECT DESCRIPTION	PROJ.	AFE	EPCM Co.	EPCM No.	APPD.
1	04.01.12	CLYDE LAKE COMPRESSOR STATION	.	–	GRB	9107	.
2	06.05.15	COMPRESSOR ADDITION	06CLP8-9	0671036	HZP INC.	56-002	.
3	07.07.30	K-700 COMPRESSOR REMOVAL (AS-BUILT)	.	.	SEGMENT	2325	.
.	–	.	.	.	.	.	.
.	–	.	.	.	.	.	.
.	–	.	.	.	.	.	.
.	–	.	.	.	.	.	.
.	–	.	.	.	.	.	.
.	.	.	.	.	.	.	.
.	.	.	.	.	.	.	.

REV.NUMBER 3D	ISSUE STAGE	DATE	BY	CHKD.	APPD.
	Prelim.(1A1)	00-12-20	CG	LK	RG
	Bid	01.02.01	CHD	LK	RG
	Constr(1C1)	01.02.13	GHD	LK	RG
	As-built	01.07.10	GHD	AP	RG
	Apprl (2A1)	06.04.19	JR	LB	LBM
	Constr.(2C1)	06.06.02	DC	LBM	BL
	Removal(3C1)	07.08.13	GA	IC	GJ
	As-built(3D)	07.11.05	AS	IC	GJ

REV. NO. FORMAT: 1-A

PERMIT STAMP

SEGMENT ENGINEERING INC'S PERMIT TO PRACTICE PERMIT No: P 6614 WAS AFFIXED TO REV. 3C1 OF THIS DRAWING AND WAS SIGNED BY GREG JUNEAU ON AUG. 13, 2007

ENGINEER'S STAMP

REVISION 3C1 OF THIS DRAWING WAS P. ENG STAMPED AND SIGNED BY GREG JUNEAU ON AUG. 13, 2007

PERMIT STAMP AND PROFESSIONAL STAMP AFFIXED ABOVE SHALL APPLY ONLY TO REV(s) –

cenovus ENERGY

MAIN PLT.	COMP. STN. 08-09
MAIN LOC.	08-09-072-09 W4M
FAC. TYPE	COMPRESSOR STATION
SITE LOC.	08-09-072-09 W4M
SCALE	NTS (A1 Size)
EPCM No.	2325
EPCM Co.	SEGMENT ENGINEERING INC.
TITLE	PIPING AND INSTRUMENTATION DIAGRAM DEHYDRATION BUILDING T-710
AREA	CLYDE LAKE
CLASS	A
FILE NO.	CYL0181A

Drawings Must Comply with Cenovus Energy Drafting & Drawing Specifications