Date Saved: 2010-04-07 10:52am

Drawings Must Comply with Cenovus Energy Drafting & Drawing Specifications

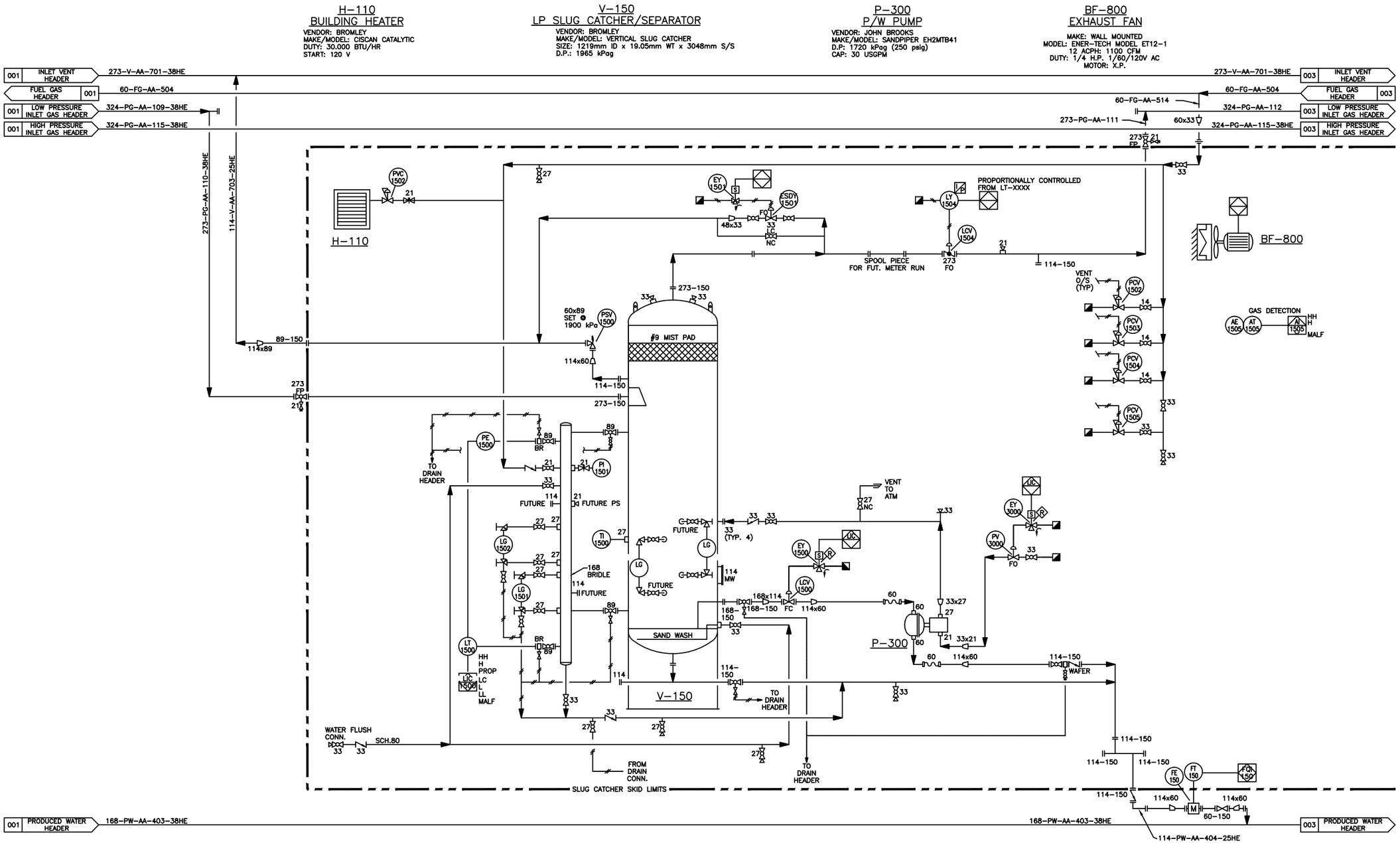

SEGMENT ENGINEERING
OIL & GAS EPCM SERVICES

REFERENCE DRAWINGS	DWG. NO.
.	.
.	.
.	.
.	.
.	.
.	.

CAUTION : READ BEFORE EXCAVATION
ALL EXCAVATIONS MUST BE CARRIED OUT AS PER Cenovus Energy Inc. "GROUND DISTURBANCE PRACTICES"

NO.	DATE	PROJECT DESCRIPTION	PROJ.	AFE	EPCM Co.	EPCM No.	APPD.
1	04.01.12	CLYDE LAKE COMPRESSOR STATION	.	.	GRB	9107	.
2	07.08.13	K-700 COMPRESSOR REMOVAL & ADDED FE-150 & FE-250 (AS-BUILT)	.	.	SEGMENT	2325	.
.	–	.	.	.	.	.	.
.	–	.	.	.	.	.	.
.	–	.	.	.	.	.	.
.	–	.	.	.	.	.	.
.	–	.	.	.	.	.	.
.	–	.	.	.	.	.	.
.	–	.	.	.	.	.	.
.	.	.	.	.	.	.	.

REV.NUMBER 2D	ISSUE STAGE	DATE	BY	CHKD.	APPD.
	Prelim.	.	.	.	.
	Bid	.	.	.	.
	Constr.(2C1)	07.08.13	GA	.	.
	As-built(2D)	07.11.05	BLL	IC	GJ
	Constr	.	.	.	.
	.	.	.	.	.
	.	.	.	.	.
	.	.	.	.	.

REV. NO. FORMAT: 1-A

PERMIT STAMP

SEGMENT ENGINEERING INC'S PERMIT TO PRACTICE PERMIT No: P 6014 WAS AFFIXED TO REV. 2C1 OF THIS DRAWING AND WAS SIGNED BY GREG JUNEAU ON AUG. 13, 2007

ENGINEER'S STAMP

REVISION 2C1 OF THIS DRAWING WAS P. ENG STAMPED AND SIGNED BY GREG JUNEAU ON AUG. 13, 2007

PERMIT STAMP AND PROFESSIONAL STAMP AFFIXED ABOVE SHALL APPLY ONLY TO REV(s) –

cenovus ENERGY

WRN FAC.	COMP. STN. 08-09
WRN LOC.	08-09-072-09 W4M
FAC TYPE	COMPRESSOR STATION
SITE LOC.	08-09-072-09 W4M
SCALE	NTS (A1 Size)
EPCM NO.	2325
EPCM CO.	SEGMENT ENGINEERING INC.
TITLE	PIPING AND INSTRUMENTATION DIAGRAM SLUG CATCHER V-150
AREA	CLYDE LAKE
CLASS	A
FILE NO.	CYL0175A

CONG1-CYL-42-PID-00-0010-001