210003-03-01A

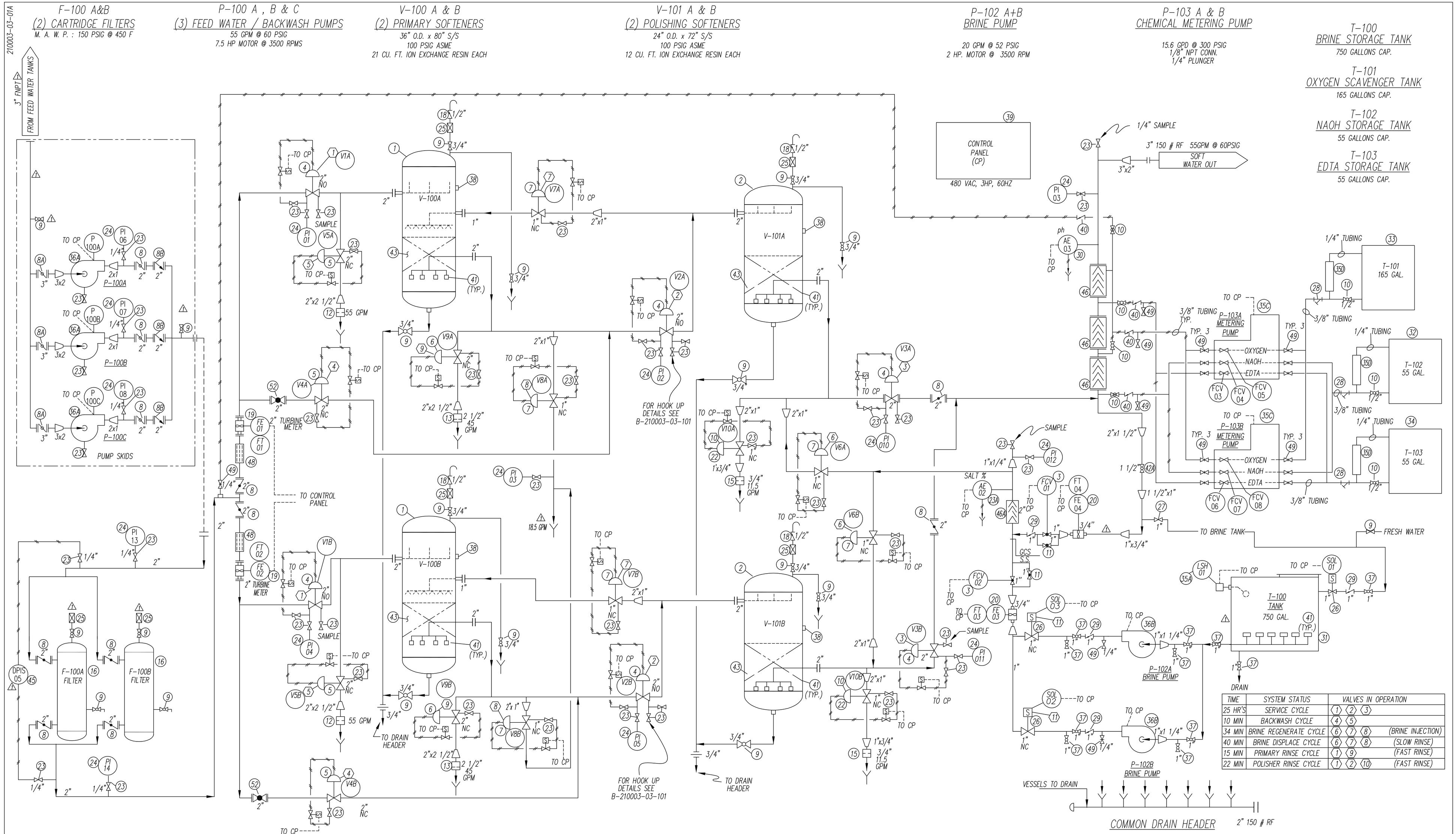

TIME	SYSTEM STATUS	VALVES IN OPERATION	
25 HR'S	SERVICE CYCLE	1 2 3	
10 MIN	BACKWASH CYCLE	4 5	
34 MIN	BRINE REGENERATE CYCLE	6 7 8	(BRINE INJECTION)
40 MIN	BRINE DISPLACE CYCLE	6 7 8	(SLOW RINSE)
15 MIN	PRIMARY RINSE CYCLE	1 9	(FAST RINSE)
22 MIN	POLISHER RINSE CYCLE	1 2 10	(FAST RINSE)

DRAWING NUMBER	DESCRIPTION	DRAWING NUMBER	DESCRIPTION

REFERENCE DRAWINGS

NO.	DATE		BY	APP.	NO.	DATE		BY	APP.
1	11/22/13	AS-BUILT	SN	WJF					
0	12/16/10	ISSUED FOR CONSTRUCTION	JN	ABE					

REVISIONS

THIS DRAWING, IN DESIGN AND DETAIL, IS THE PROPERTY OF EN-FAB, INC., AND IS CONSIDERED CONFIDENTIAL. IT MUST NOT BE USED EXCEPT IN CONNECTION WITH OUR WORK. IT MAY NOT BE REPRODUCED OR COPIED WITHOUT WRITTEN CONSENT OF EN-FAB, INC.. UNLESS NOTED OTHERWISE, ALL DIMENSIONS ARE IN FEET AND INCHES. DO NOT SCALE THIS DRAWING. UNLESS OTHERWISE SPECIFIED ON THIS DRAWING, TOLERANCES ARE AS PER OUR STANDARD MANUFACTURING PRACTICES.

		DATE
DRAWN BY	FR	10/12/10
CHECKED BY	JN	12/16/10
PROJECT ENGINEER	SV	12/16/10
APPROVED BY	ABE	12/16/10
CERTIFIED BY		

TITLE

PIPING & INSTRUMENT DIAGRAM

SODIUM ZEOLITE AUTOMATIC WATER SOFTENER
EN-FAB MODEL EF-WS3624-2A

WORK ORDER NO. 210003 | CUST. P.O. NO. | ITEM NO. 03

CUSTOMER: EN-FAB, INC.

EN-FAB, INC.
HOUSTON, TEXAS

SCALE: NONE | TOLERANCE: AS NOTED

DWG. NO. D-210003-03-01 | SHT. 1 OF 1 | REV. 1