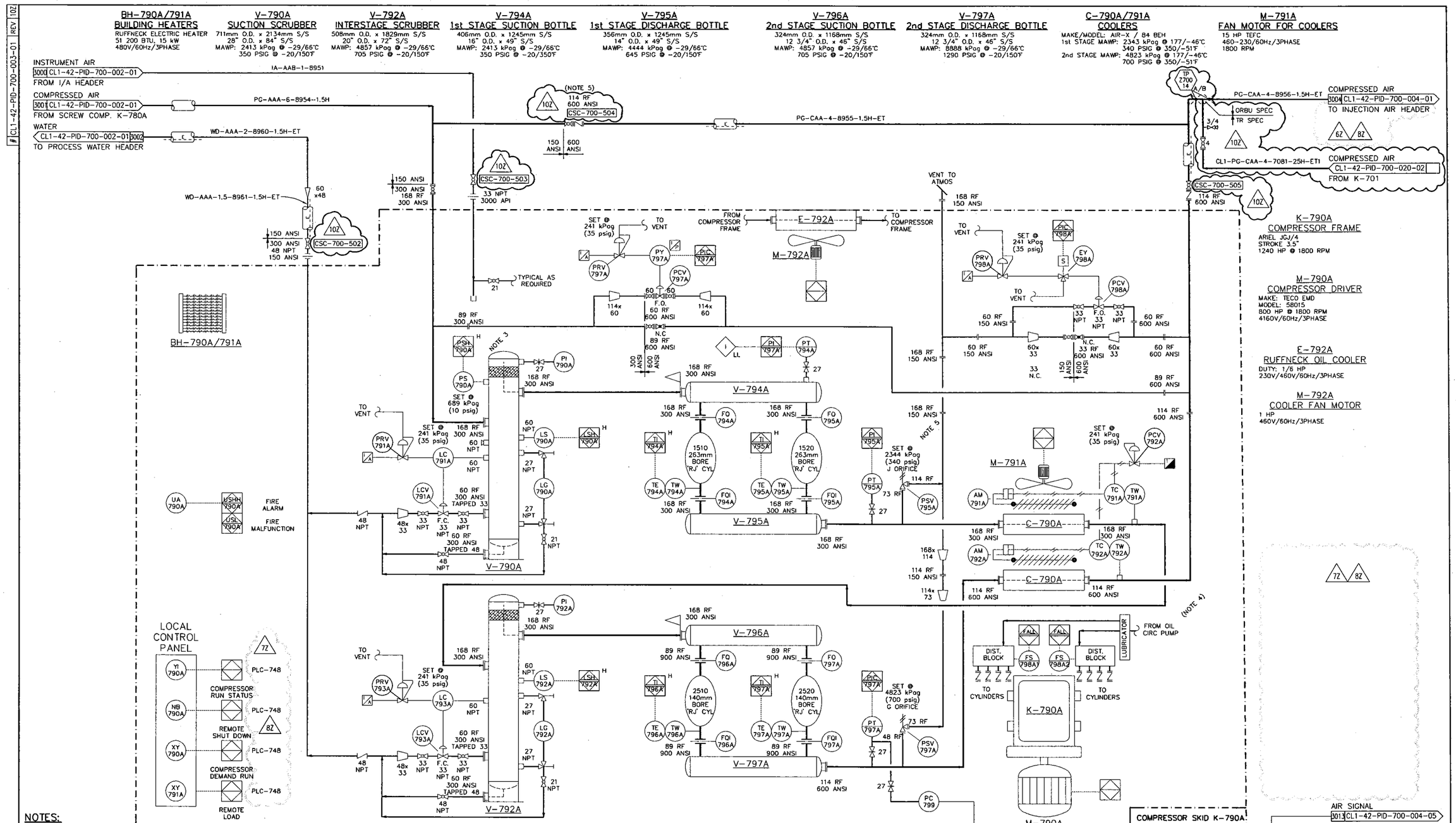

NOTES:

1. REFERENCE COLLICUT ENERGY SERVICES DRAWINGS 8416A05 FOR ORIGINAL PROCESS P&ID'S.
2. CONFIRM PSV SETTING TO PROTECT INLET SCRUBBER.
3. TO BE FIELD INSTALLED.
4. LUBE OIL ADDED TO DRAWING, BASED ON VENDOR UTILITY DWG.
5. CHANGES BASED ON VENDOR AS BUILTS.

DRAWING NUMBER	REFERENCE DRAWINGS

STAMPS

PERMIT TO PRACTICE
THREE STREAMS ENGINEERING LTD.
Signature
Date Oct 11/11
PERMIT NUMBER: P 8456
The Association of Professional Engineers, Geologists and Geophysicists of Alberta

PROFESSIONAL ENGINEER ALBERTA
HAYDER ABDUL AMEER
Oct 07/2011

FOR REV. 10Z ONLY

REV NO	REVISION	DATE	DRN	CKD	DES	LDE	PE
7Z	RE-ISSUED FOR CONSTRUCTION (ENC09096)	10/04/28	LP	GR	HA	HA	CH
8Z	AS-BUILT (ENC09096) REVS. 6Z & 7Z	10/12/02	AR	GR		HA	CH
10Z	ISSUED FOR CONSTRUCTION (CVE11011)	11/09/26	JE				
E	ISSUED FOR DESIGN (OEL-4701)	05/11/30	ACA	DDM			
0	ISSUED FOR CONSTRUCTION (OEL-4701)	05/12/08	TET	DDM			
1	RE-ISSUED FOR CONSTRUCTION (OEL-4701)	05/12/20	TET	ACA			
2	ISSUED FOR GENERAL REVISIONS (OEL-4701)	06/03/02	MMP	ACA			
3	ISSUED FOR ABSA APPROVAL (OEL-4701)	06/04/11	APT	CMB			
4Z	RE-ISSUED-DWG RE-NUMBERED FROM 300 SERIES, COSMETIC ONLY	08/04/08	KK		EM	EM	
5	AS-BUILT PER FIELD MARK-UPS	08/04/30	MD	LTL			EM
6Z	ISSUED FOR CONSTRUCTION (ENC09096)	10/01/27	RB	DL	HA	HA	EM

DESIGNED BY THP
DRAWN BY
CHECKED BY
LEAD DISC ENG
PROJECT ENGINEER
DATE
SCALE NONE
WORK PACKAGE #

CONSULTANT LOGO
THREE STREAMS ENGINEERING LTD.

CADD FILE NAME CL142PID70000301_10Z
PROJECT NO. CVE11011

cenovus ENERGY
Cenovus FCCL Ltd

TITLE
CHRISTINA LAKE COMMERCIAL PLANT
PIPING AND INSTRUMENTATION DIAGRAM
11-16-76-06 W4M
RECIPROCATING COMPRESSOR (K-790A)

DRAWING CL1-42-PID-700-003-01
REVISION 10Z

CL1-42-PID-700-003-01 REV 10Z

CL1-42-PID-700-0003-001