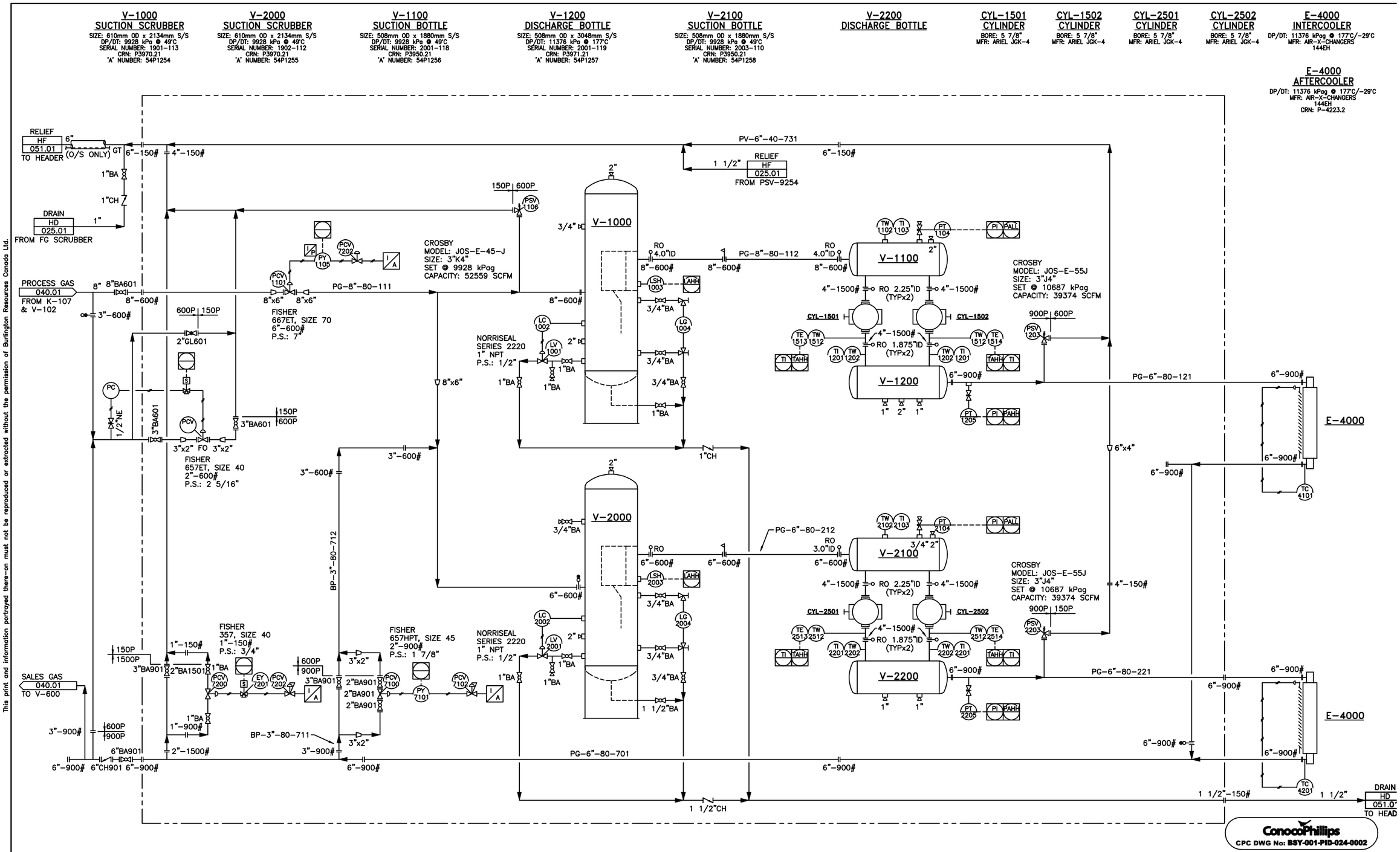

This print and information portrayed there-on must not be reproduced or extracted without the permission of Burlington Resources Canada Ltd.

INFORMATION ON THIS DRAWING TRANSCRIBED FROM
COLLICUTT HANOVER
DWG. NO. 2099A01 REV. 4

REFERENCE DRAWINGS	DWG No
–	–

REV	DATE	REVISION DESCRIPTION	BY
1	08.02.22	MECHANICAL AS-BUILT (CALTECH PROJ# CS12049)	KO

ENGINEER			
APPROVAL			
CHECKER	KD		
DRAWN	KO		
DATE	08.02.22		
SCALE:	NTS	APPROVED	DATE

LICENCE AND PERMIT

BRASSEY
CENTRAL FACILITIES
K-106 SALES COMPRESSOR
MECHANICAL FLOW SHEET
d-13-F/93-P-10

ConocoPhillips Canada

PLANT No	DRAWING No.
03.010	024.01