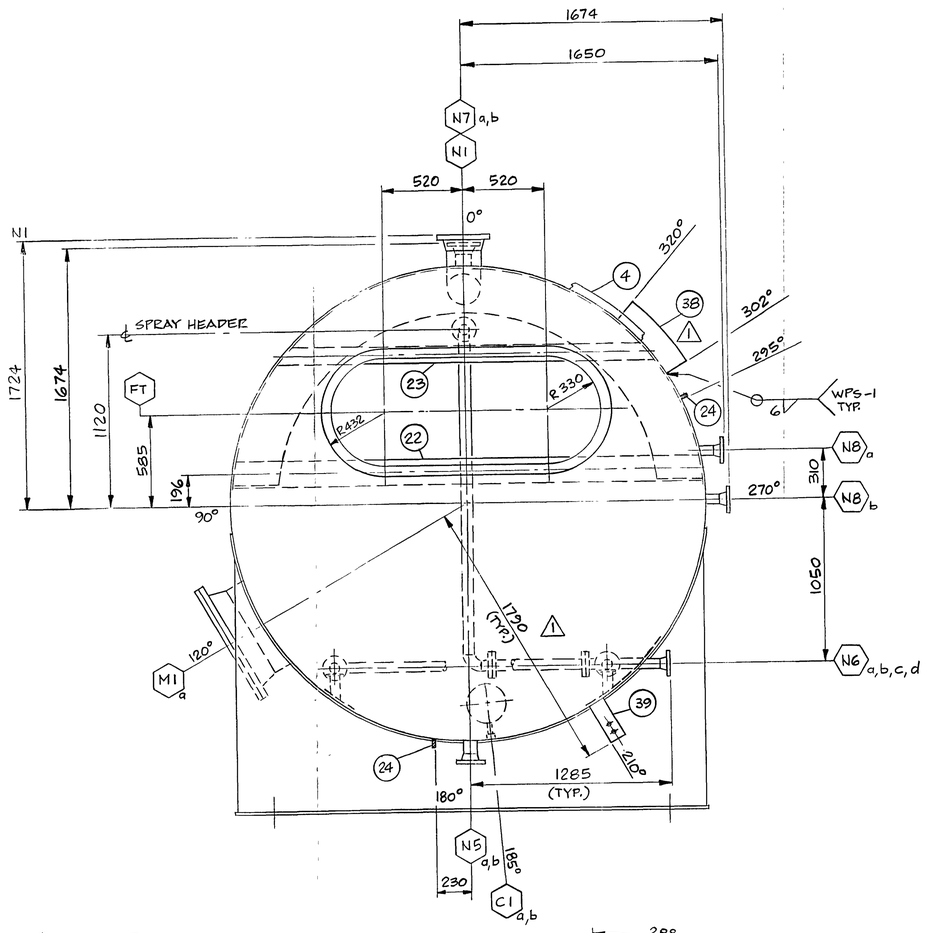

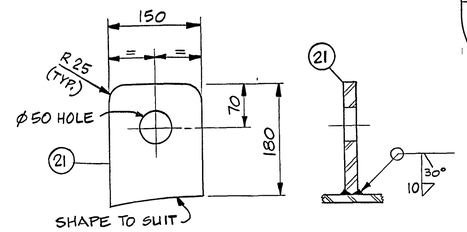

LIFT LUG DETAIL
SCALE 1:5

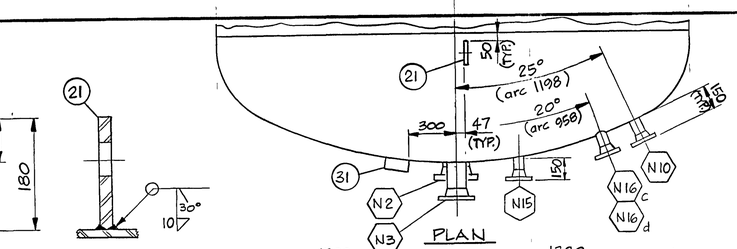

PLAN

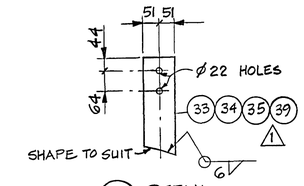

2 DETAIL
SCALE 1:10

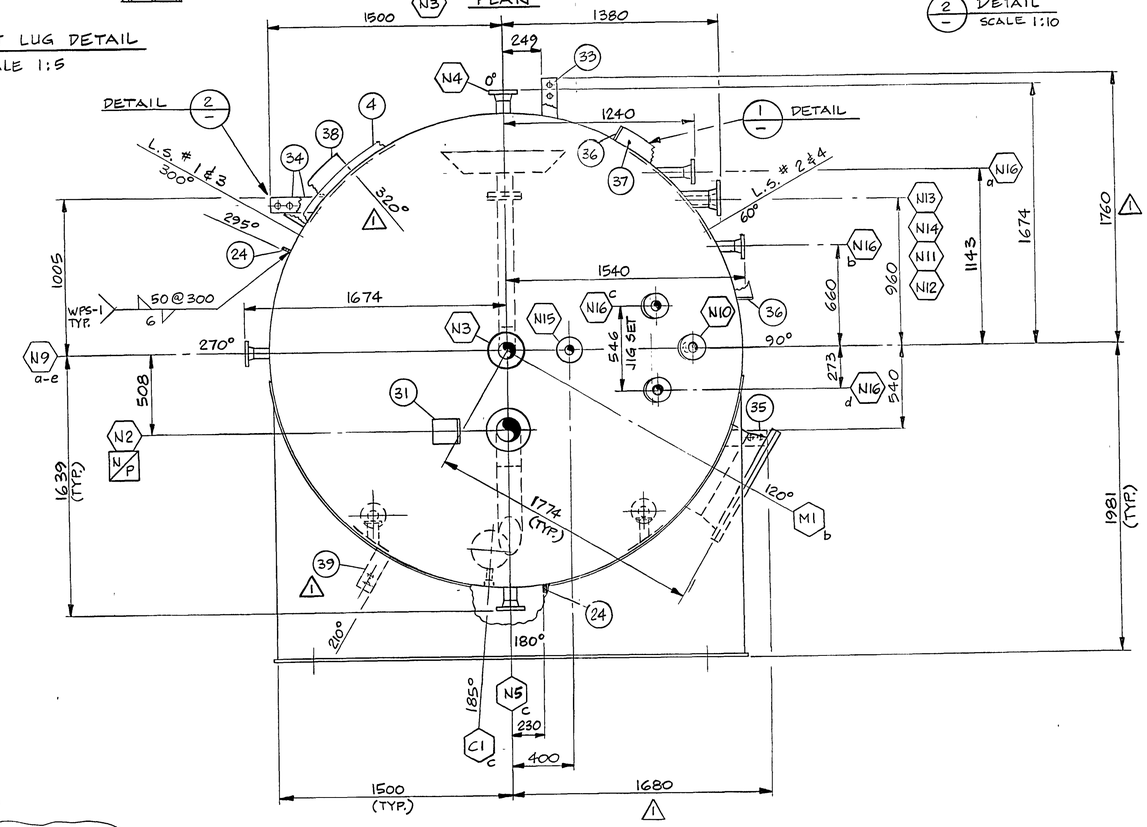

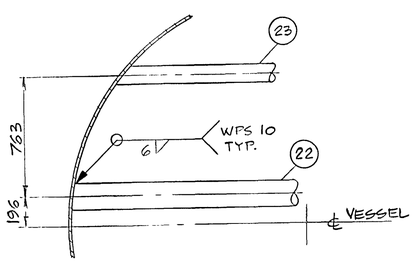

FIRE TUBE SUPPORTS DETAIL

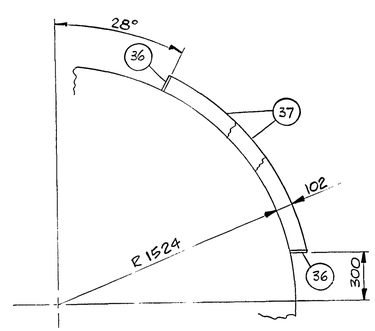

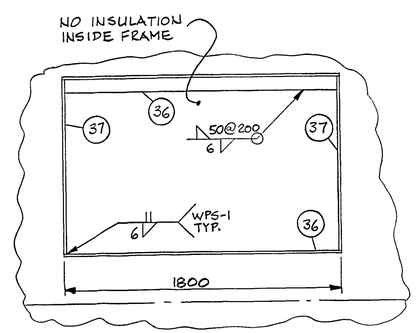

1 DETAIL

NOTES:

DRAWING	DESCRIPTION

REFERENCE DRAWINGS

NO	BY	DATE	DESCRIPTION	APP'D
1	D.H.	28.05.91	REV'D AS NOTED, ADD. ITEM 38 & 39	
0	D.H.	15.05.91	ISSUED FOR CONSTRUCTION	
R	D.H.	13.05.91	ISSUED FOR REGISTRATION	
A	D.H.	19.04.91	ISSUED FOR APPROVAL	

REVISIONS

ENGINEER'S STAMP

APPROVAL STAMP

DRAWN: D.H.	DATE: 28.03.91	
CHECKED:	DATE: 14.05.91	
APPROVED:	DATE: 14-05-91	
CADD REF:		
SCALE 1:20		

I.P. Constructors Ltd.
Calgary, Alberta Canada

PROJECT: SASKATCHEWAN OIL AND GAS CORPORATION
MARSDEN UNIT #1
LSD 1-30-44-26-W3M

TITLE: V-101
FREE WATER KNOCK OUT
SIDE VIEWS & DETAILS

JOB NO: 1275 | DRAWING NO: D-1275-09-02 | REV: 1

THIS DRAWING AND ITS DESIGN ARE THE EXCLUSIVE PROPERTY OF I.P. CONSTRUCTORS LTD. AND SHALL NOT BE DISCLOSED OR REPRODUCED IN ANY MATTER WITHOUT THE PERMISSION OF I.P. CONSTRUCTORS LTD.

IPCSLKTA