Product Catalog: Husqvarna/120 Mark II

ACCESSORIES

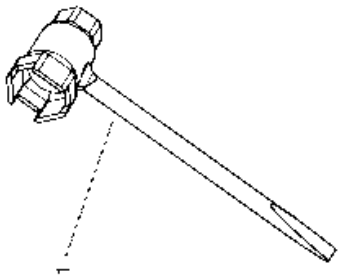

Ref.	Article N.	Description	Qty	Kit
1	587465401	WRENCH *For all EXCEPT For 967861912, 967861934, 967861936. WRENCH CHAINBRAKE RESET.*	1	-
1	587417201	WRENCH *For 967861912, 967861934, 967861936, 970515014, 970515016, 970515024*	1	-
1	586936202	CARBURETTOR *CARBURETOR WITH PURGE BULB*	1	-
2	577815201	THROTTLE *THROTTLE WIRE*	1	-
3	575493401	AIR FILTER *HOUSING*	1	-
4	545061801	AIR FILTER *AIR FILTER*	1	-
5	545151801	PLATE *FILTER PLATE*	1	-
6	530016101	NUT	2	-

Ref.	Article N.	Description	Qty	Kit
		NUT		
7	545061901	ISOLATOR *ISOLATOR FILTER HOUSING*	1	-
8	545063401	SWITCH. SPRING *SWITCH SPRING*	1	-
9	545061701	SWITCH LEVER *SWITCH LEVER*	1	-
10	545061601	CHOKE KNOB *CHOKE KNOB*	1	-
11	545061501	CARB ADAPTOR SEAL *CARB ADAPTOR SEAL*	1	-
13	577636501	ADAPTOR *ADAPTOR CARBURETOR*	1	-
15	545033701	STUD-CARBURETOR *STUD-CARBURETOR*	2	-
16	545158301	CARB ADAPTOR SCREW *CARB ADAPTOR SCREW*	4	-
17	530016080	SCREW *SCREW*	1	-
18	545074901	TOP STUD-CARBURETOR *TOP STUD-CARBURETOR*	1	-
19	545081892	GASKET KIT *GASKET KIT*	1	-
20	530016349	SCREW *SCREW*	1	-
2	530057950	PIN. DOWEL *PIN. DOWEL*	1	-
3	578936401	LINK	1	-
4	574780301	SCREW *SCREW M3.63-1.34 X 8MM TORX*	1	-
5	530016415	SPRING COMPRESSION *SPRING COMPRESSION*	1	-
6	530016110	SCREW *SCREW BAR ADJUSTMENT*	1	-
7	530038593	RETAINER *RETAINER BAR ADJUSTMENT*	1	-
8	530015826	PEN *PIN BAR ADJUSTING*	1	-
10	530015913	PEN *PIN BRAKE BAND*	1	-
11	530057923	BRAKE BAND *BRAKE BAND*	1	-
12	525743001	COVER	1	-

Ref.	Article N.	Description	Qty	Kit
		COVER CHAIN BRAKE		
13	545227101	SCREW *SCREW*	3	-
14	530015917	NUT *NUT*	2	-
15	545118701	DECAL *DECAL*	1	-
16	525628901	CHAIN BRAKE ASSY *CHAIN BRAKE ASSY*	1	-
1	530014949	CLUTCH *CLUTCH*	1	-
2	530015611	WASHER *WASHER*	1	-
3	530047061	CLUTCH DRUM ASSY *For all EXCEPT 967861902. CLUTCH DRUM ASSY SPUR 3/8 6T.*	1	-
3	530048132	CLUTCH DRUM *For 967861902. CLUTCH DRUM ASSY SPUR .325 7T.*	1	-
4	579621501	WASHER *WASHER THRUST*	1	-
5	525318401	DUST SEAL *DUST SEAL OIL PUMP*	1	-
6	530037820	WORM GEAR *PISTON*	1	-
7	581063901	OIL PUMP ASSY *OIL PUMP ASSY COMPLETE*	1	-
8	545227101	SCREW	1	-
9	545227501	BLOCK *BLOCK OIL*	1	-
10	530049477	ELBOW *ELBOW*	1	-
11	545069401	SEAL *SEAL*	1	-
12	530056533	SCREEN *SCREEN*	1	-
1	576543201	CYLINDER COVER ASSY *KIT CYLINDER SHIELD*	1	-
2	574320601	SCREW *SCREW M5-0.8X25*	3	-
3	545116502	DECAL *DECAL STARTING INSTRUCTIONS*	1	-
4	545165957	SIGN *DECAL WARNING*	1	-
5	579173401	KIT	1	-

Ref.	Article N.	Description	Qty	Kit
		KIT CHASSIS BRASS INSERTS		
1	576243901	BEARING	2	-
2	580302601	CRANKSHAFT	1	-
1	581608001	SEAL *SEAL RADIAL BEARING 12 X 36.2 X 3.7*	2	-
3	577830802	KIT *KIT CRANKSHAFT COMPLETE HARDMOUNT BEARING*	1	-
4	585621401	BEARING *BEARING 37MM OD*	2	-
1	577831102	KIT *For all EXCEPT For 967861912, 967861934, 967861936, 970515014, 970515016, 970515024. KIT PISTON AND CYLINDER HARDMOUNT BEARING.*	1	-
1	577831101	KIT *For 967861912, 967861934, 967861936, 970515014, 970515016, 970515024*	1	-
2	545081501	BOLT *BOLT CYLINDER*	4	-
3	574190901	INSERT *INSERT LEFT 38CC CYLINDER*	1	-
4	574190801	INSERT *INSERT RIGHT 38CC CYLINDER*	1	-
5	585040601	PISTON RING *For all EXCEPT For 967861912, 967861934, 967861936, 970515014, 970515016, 970515024. PISTON RING 38CC PISTON RING.*	1	-
5	530012608	PISTON RING *For 967861912, 967861934, 967861936, 970515014, 970515016, 970515024*	1	-
8	530015697	LOCKING RING *LOCKING RING*	2	-
9	503235108	SPARK PLUG *SPARK PLUG M14X1.25 RCJ7Y*	1	-
10	545081894	KIT *For 967861912, 967861934, 967861936, 970515014, 970515016, 970515024*	1	-
10	577831302	KIT *For all EXCEPT For 967861912, 967861934, 967861936, 970515014, 970515016, 970515024. KIT PISTON HARDMOUNT BEARING.*	1	-
1	577611901	HAND GUARD *HAND GUARD ASSY HHS*	1	-
2	545127301	BOSS *BOSS SCREW HANDGUARD*	1	-
3	545061201	REAR WHEEL *REAR WHEEL*	1	-
4	545227101	SCREW *SCREW*	1	-
5	545075401	GROMMET	1	-

Ref.	Article N.	Description	Qty	Kit
		GROMMET REAR WALL		
6	545071401	BAR *BAR PLATE MOUNTING*	1	-
7	545071301	CAP. SPRING HANDGUARD *CAP. SPRING HANDGUARD*	1	-
8	545071201	SPRING. HANDGUARD POSITION *SPRING. HANDGUARD POSITION*	1	-
11	587026801	CHASSIS *For all EXCEPT 967861912, 967861934, 967861936, 970515014, 970515016, 970515024. CHASSIS ASSEMBLY MACH. BEARING.*	1	-
11	579665204	CHASSIS *For 970515014, 970515016, 970515024, 967861912, 967861936, 967861934*	1	-
13	529310301	BOLT *BOLT M8 X 1.25*	2	-
14	545033501	HOSE *HOSE*	1	-
15	530029868	PLUG *PLUG*	1	-
16	530026119	CHECK VALVE *CHECK VALVE DUCKBILL*	1	-
17	580727101	FUEL HOSE *FUEL HOSE KIT LP100 5.3 O.D.*	1	-
18	530023877	NIPPLE *NIPPLE FITTING - FUEL LINE*	1	-
20	545061901	ISOLATOR *ISOLATOR FILTER HOUSING*	1	-
21	544111203	TANK CAP ASSY *TANK CAP ASSY GREY*	2	-
22	530015906	SCREW *SCREW*	2	-
23	545033801	ISOLATOR *ISOLATOR ASSY FRONT*	1	-
25	545063101	SPRING *For all EXCEPT 967861912, 967861934, 967861936, 970515014, 970515016, 970515024. SPRING REAR ISOLATOR.*	1	-
25	577540601	SPRING *For 967861912, 967861934, 967861936, 970515014, 970515016, 970515024*	1	-
26	577167201	FUEL FILTER *ASSEMBLY FUEL PICKUP PRE FLUSHED*	1	-
27	580727101	FUEL HOSE *FUEL HOSE KIT LP100 5.3 O.D.*	1	-
28	530015814	SCREW *SCREW PT 60/10-14*	1	-

Ref.	Article N.	Description	Qty	Kit
29	530029850	CHAIN CATCHER *CHAIN CATCHER*	1	-
30	530038990	FELLING DOG *FELLING DOG*	1	-
31	530016439	SCREW *SCREW*	2	-
32	530014381	FELLING DOG *FELLING DOG KIT SPIKE ASSEMBLY*	1	-
33	503735801	BUSHING *For 967861912, 967861934, 967861936, 970515014, 970515016, 970515024*	1	-
33	580457501	GROMMET *For all EXCEPT 967861912, 967861934, 967861936, 970515014, 970515016, 970515024. GROMMET FUEL LINE.*	1	-
34	592969801	SPACER PLATE *SPACER PLATE*	1	-
1	545062401	FRONT HANDLE *FRONT HANDLE*	1	-
2	545062202	REAR HANDLE W/OVMLD 240E *For 967861912, 967861934, 967861936, 970515014, 970515016, 970515024*	1	-
2	545062201	REAR HANDLE *For all EXCEPT For 967861912, 967861934, 967861936, 970515014, 970515016, 970515024. REAR HANDLE NO OVERMOLD.*	1	-
3	545062302	REAR HANDLE COVER W/OVMLD 240E *For 967861912, 967861934, 967861936, 970515014, 970515016, 970515024*	1	-
3	545062301	REAR HANDLE COVER 235/235E *For all EXCEPT For 967861912, 967861934, 967861936, 970515014, 970515016, 970515024. REAR HANDLE COVER NO OVERMOLD.*	1	-
4	545062601	LOCKOUT- THROTTLE *LOCKOUT- THROTTLE*	1	-
6	578246701	TRIGGER *TRIGGER ASSEMBLY GRAY*	1	-
7	545033901	ISOLATOR *ISOLATOR ASU FRONT ISOLATOR*	1	-
8	545076301	ISOLATION LIMITER SCREW *ISOLATION LIMITER SCREW M5.28 - 1.8 X 14.75 PL HEX M4 SPECIAL*	1	-
9	530016433	SCREW *SCREW #8-16 X 15.1 PL PAN TRX T25*	3	-
10	530016349	SCREW *SCREW*	2	-
11	530016432	SCREW *SCREW SCREW M5.38-14X22.225MM*	2	-
12	578862201	THROTTLE TRIGGER *KIT TRIGGER & LOCKOUT*	1	-

Ref.	Article N.	Description	Qty	Kit
1	575635502	FLYWHEEL *FLYWHEEL ASSY*	1	-
2	530015127	WASHER *WASHER 5/16 RAMP CONICAL*	1	-
3	530016134	NUT *NUT HEX M8-1 RH GR8*	1	-
4	575803501	MODULE *MODULE*	1	-
5	545121901	SCREW *SCREW M4-0.7X16MM SEMS T20*	2	-
6	545079901	ASSY- WIRE HARNESS *ASSY- WIRE HARNESS*	1	-
1	574266401	NUT *NUT 10MM BRASS*	1	-
2	545076901	EXHAUST PLATE *EXHAUST PLATE*	1	-
3	545167401	SCREEN *SCREEN ARRESTOR GASKET*	1	-
4	530016338	BOLT *BOLT*	2	-
5	586094301	MUFFLER *MUFFLER ASSY*	1	-
6	530054884	MUFFLER GASKET *MUFFLER GASKET*	1	-
7	545066901	MUFFLER BACK PLATE *MUFFLER BACK PLATE*	1	-
8	545008027	KIT *KIT SPARK ARRESTOR*	1	-
9	545180843	MUFFLER *MUFFLER KIT COMPLETE*	1	-
1	530021179	SCREW *SCREW*	1	-
2	530059677	SLEEVE *SLEEVE*	1	-
3	530021180	SPRING *Spring*	1	-
4	530016080	SCREW *SCREW*	1	-
5	545058201	PULLEY *PULLEY*	1	-
6	530042095	SPRING *SPRING*	1	-
7	530071966	STARTER PULLEY	1	-

Ref.	Article N.	Description	Qty	Kit
		EPS STARTER KIT (INCL. PULLEY)		
8	545063801	BAFFLE *BAFFLE*	1	-
9	545063701	FAN HOUSING *FAN HOUSING*	1	-
10	545010010	HANDLE *HANDLE ROPE ASSY*	1	-
11	530016432	SCREW *SCREW SCREW M5.38-14X22.225MM*	4	-
12	545008024	KIT *KIT COMPLETE*	1	-
13	594914101	DECAL *DECAL FAN HOUSING 120 MARK II*	1	-
1	545008028	STARTER PULLEY *KIT STD STARTER*	1	-
2	530015920	SCREW *SCREW*	1	-
3	530016080	SCREW *SCREW*	1	-
4	530057890	STARTER PULLEY *STARTER PULLEY*	1	-
5	545010010	HANDLE *HANDLE ROPE ASSY*	1	-
6	545008013	SPRING CASSETTE ASSY *SPRING*	1	-
7	545063801	BAFFLE *BAFFLE*	1	-
8	545063701	FAN HOUSING *FAN HOUSING*	1	-
9	530016432	SCREW *SCREW SCREW M5.38-14X22.225MM*	4	-
10	545008025	STARTER ASSY *KIT COMPLETE*	1	-
11	594914101	DECAL *DECAL FAN HOUSING 120 MARK II*	1	-
1	587609701	KIT *KIT CARB REPAIR*	1	-
2	573977601	KIT *CARBURETOR GASKET*	1	-
3	545008030	PURGE *PURGE AND LINE ASSEMBLY*	1	-
4	586936202	CARBURETTOR *CARBURETOR*	1	-

CARBURETOR AND AIR FILTER

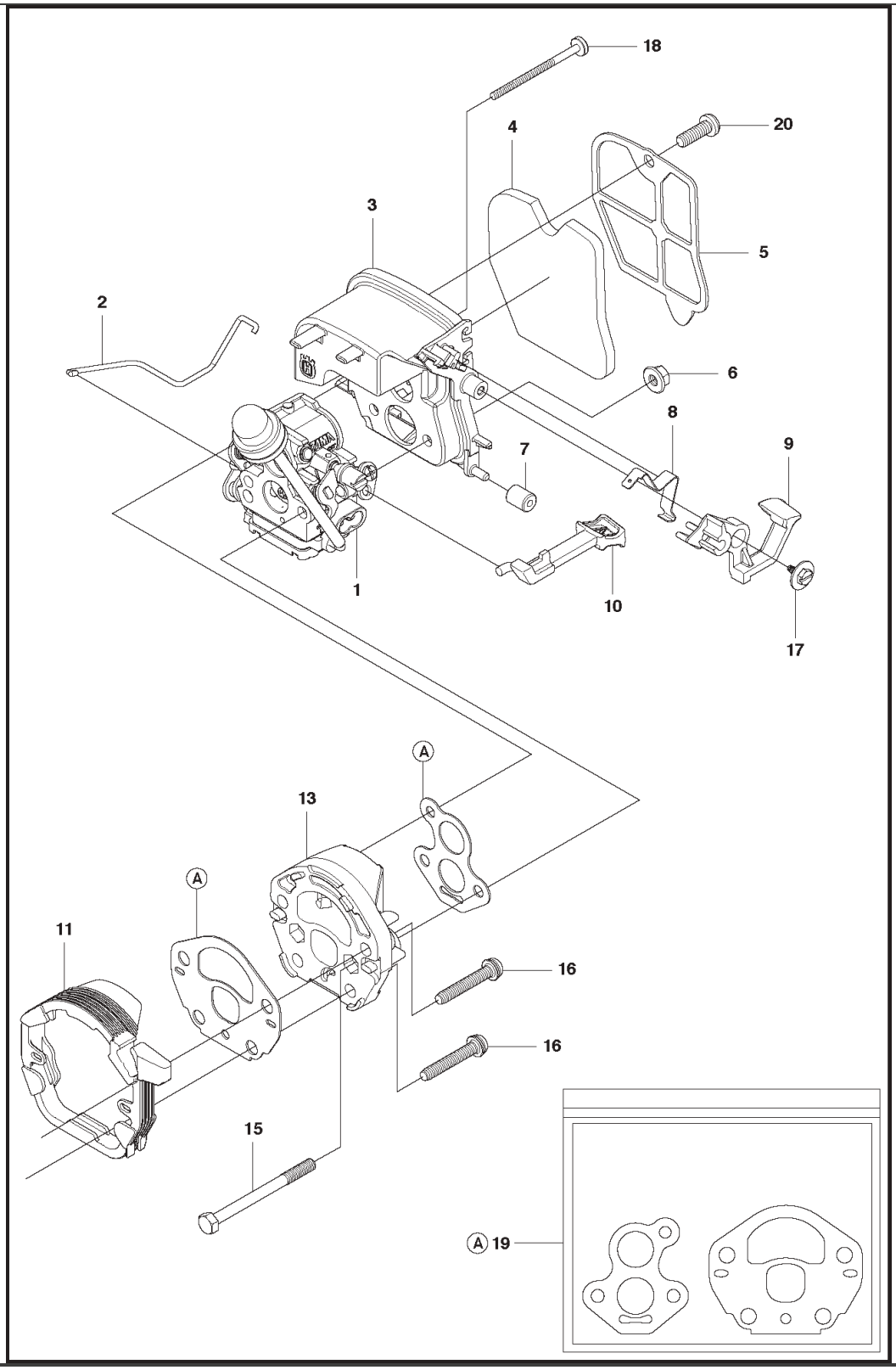

Ref.	Article N.	Description	Qty	Kit
1	587465401	WRENCH *For all EXCEPT For 967861912, 967861934, 967861936. WRENCH CHAINBRAKE RESET.*	1	-

Ref.	Article N.	Description	Qty	Kit
1	587417201	WRENCH *For 967861912, 967861934, 967861936, 970515014, 970515016, 970515024*	1	-
1	586936202	CARBURETTOR *CARBURETOR WITH PURGE BULB*	1	-
2	577815201	THROTTLE *THROTTLE WIRE*	1	-
3	575493401	AIR FILTER *HOUSING*	1	-
4	545061801	AIR FILTER *AIR FILTER*	1	-
5	545151801	PLATE *FILTER PLATE*	1	-
6	530016101	NUT *NUT*	2	-
7	545061901	ISOLATOR *ISOLATOR FILTER HOUSING*	1	-
8	545063401	SWITCH. SPRING *SWITCH SPRING*	1	-
9	545061701	SWITCH LEVER *SWITCH LEVER*	1	-
10	545061601	CHOKE KNOB *CHOKE KNOB*	1	-
11	545061501	CARB ADAPTOR SEAL *CARB ADAPTOR SEAL*	1	-
13	577636501	ADAPTOR *ADAPTOR CARBURETOR*	1	-
15	545033701	STUD-CARBURETOR *STUD-CARBURETOR*	2	-
16	545158301	CARB ADAPTOR SCREW *CARB ADAPTOR SCREW*	4	-
17	530016080	SCREW *SCREW*	1	-
18	545074901	TOP STUD-CARBURETOR *TOP STUD-CARBURETOR*	1	-
19	545081892	GASKET KIT *GASKET KIT*	1	-
20	530016349	SCREW *SCREW*	1	-
2	530057950	PIN. DOWEL *PIN. DOWEL*	1	-
3	578936401	LINK	1	-
4	574780301	SCREW *SCREW M3.63-1.34 X 8MM TORX*	1	-

Ref.	Article N.	Description	Qty	Kit
5	530016415	SPRING COMPRESSION *SPRING COMPRESSION*	1	-
6	530016110	SCREW *SCREW BAR ADJUSTMENT*	1	-
7	530038593	RETAINER *RETAINER BAR ADJUSTMENT*	1	-
8	530015826	PEN *PIN BAR ADJUSTING*	1	-
10	530015913	PEN *PIN BRAKE BAND*	1	-
11	530057923	BRAKE BAND *BRAKE BAND*	1	-
12	525743001	COVER *COVER CHAIN BRAKE*	1	-
13	545227101	SCREW *SCREW*	3	-
14	530015917	NUT *NUT*	2	-
15	545118701	DECAL *DECAL*	1	-
16	525628901	CHAIN BRAKE ASSY *CHAIN BRAKE ASSY*	1	-
1	530014949	CLUTCH *CLUTCH*	1	-
2	530015611	WASHER *WASHER*	1	-
3	530047061	CLUTCH DRUM ASSY *For all EXCEPT 967861902. CLUTCH DRUM ASSY SPUR 3/8 6T.*	1	-
3	530048132	CLUTCH DRUM *For 967861902. CLUTCH DRUM ASSY SPUR .325 7T.*	1	-
4	579621501	WASHER *WASHER THRUST*	1	-
5	525318401	DUST SEAL *DUST SEAL OIL PUMP*	1	-
6	530037820	WORM GEAR *PISTON*	1	-
7	581063901	OIL PUMP ASSY *OIL PUMP ASSY COMPLETE*	1	-
8	545227101	SCREW	1	-
9	545227501	BLOCK *BLOCK OIL*	1	-
10	530049477	ELBOW *ELBOW*	1	-

Ref.	Article N.	Description	Qty	Kit
11	545069401	SEAL *SEAL*	1	-
12	530056533	SCREEN *SCREEN*	1	-
1	576543201	CYLINDER COVER ASSY *KIT CYLINDER SHIELD*	1	-
2	574320601	SCREW *SCREW M5-0.8X25*	3	-
3	545116502	DECAL *DECAL STARTING INSTRUCTIONS*	1	-
4	545165957	SIGN *DECAL WARNING*	1	-
5	579173401	KIT *KIT CHASSIS BRASS INSERTS*	1	-
1	576243901	BEARING	2	-
2	580302601	CRANKSHAFT	1	-
1	581608001	SEAL *SEAL RADIAL BEARING 12 X 36.2 X 3.7*	2	-
3	577830802	KIT *KIT CRANKSHAFT COMPLETE HARDMOUNT BEARING*	1	-
4	585621401	BEARING *BEARING 37MM OD*	2	-
1	577831102	KIT *For all EXCEPT For 967861912, 967861934, 967861936, 970515014, 970515016, 970515024. KIT PISTON AND CYLINDER HARDMOUNT BEARING.*	1	-
1	577831101	KIT *For 967861912, 967861934, 967861936, 970515014, 970515016, 970515024*	1	-
2	545081501	BOLT *BOLT CYLINDER*	4	-
3	574190901	INSERT *INSERT LEFT 38CC CYLINDER*	1	-
4	574190801	INSERT *INSERT RIGHT 38CC CYLINDER*	1	-
5	585040601	PISTON RING *For all EXCEPT For 967861912, 967861934, 967861936, 970515014, 970515016, 970515024. PISTON RING 38CC PISTON RING.*	1	-
5	530012608	PISTON RING *For 967861912, 967861934, 967861936, 970515014, 970515016, 970515024*	1	-
8	530015697	LOCKING RING *LOCKING RING*	2	-
9	503235108	SPARK PLUG *SPARK PLUG M14X1.25 RCJ7Y*	1	-
10	545081894	KIT	1	-

Ref.	Article N.	Description	Qty	Kit
		For 967861912, 967861934, 967861936, 970515014, 970515016, 970515024		
10	577831302	KIT *For all EXCEPT For 967861912, 967861934, 967861936, 970515014, 970515016, 970515024. KIT PISTON HARDMOUNT BEARING.*	1	-
1	577611901	HAND GUARD *HAND GUARD ASSY HHS*	1	-
2	545127301	BOSS *BOSS SCREW HANDGUARD*	1	-
3	545061201	REAR WHEEL *REAR WHEEL*	1	-
4	545227101	SCREW *SCREW*	1	-
5	545075401	GROMMET *GROMMET REAR WALL*	1	-
6	545071401	BAR *BAR PLATE MOUNTING*	1	-
7	545071301	CAP. SPRING HANDGUARD *CAP. SPRING HANDGUARD*	1	-
8	545071201	SPRING. HANDGUARD POSITION *SPRING. HANDGUARD POSITION*	1	-
11	587026801	CHASSIS *For all EXCEPT 967861912, 967861934, 967861936, 970515014, 970515016, 970515024. CHASSIS ASSEMBLY MACH. BEARING.*	1	-
11	579665204	CHASSIS *For 970515014, 970515016, 970515024, 967861912, 967861936, 967861934*	1	-
13	529310301	BOLT *BOLT M8 X 1.25*	2	-
14	545033501	HOSE *HOSE*	1	-
15	530029868	PLUG *PLUG*	1	-
16	530026119	CHECK VALVE *CHECK VALVE DUCKBILL*	1	-
17	580727101	FUEL HOSE *FUEL HOSE KIT LP100 5.3 O.D.*	1	-
18	530023877	NIPPLE *NIPPLE FITTING - FUEL LINE*	1	-
20	545061901	ISOLATOR *ISOLATOR FILTER HOUSING*	1	-
21	544111203	TANK CAP ASSY *TANK CAP ASSY GREY*	2	-
22	530015906	SCREW *SCREW*	2	-

Ref.	Article N.	Description	Qty	Kit
23	545033801	ISOLATOR *ISOLATOR ASSY FRONT*	1	-
25	545063101	SPRING *For all EXCEPT 967861912, 967861934, 967861936, 970515014, 970515016, 970515024. SPRING REAR ISOLATOR.*	1	-
25	577540601	SPRING *For 967861912, 967861934, 967861936, 970515014, 970515016, 970515024*	1	-
26	577167201	FUEL FILTER *ASSEMBLY FUEL PICKUP PRE FLUSHED*	1	-
27	580727101	FUEL HOSE *FUEL HOSE KIT LP100 5.3 O.D.*	1	-
28	530015814	SCREW *SCREW PT 60/10-14*	1	-
29	530029850	CHAIN CATCHER *CHAIN CATCHER*	1	-
30	530038990	FELLING DOG *FELLING DOG*	1	-
31	530016439	SCREW *SCREW*	2	-
32	530014381	FELLING DOG *FELLING DOG KIT SPIKE ASSEMBLY*	1	-
33	503735801	BUSHING *For 967861912, 967861934, 967861936, 970515014, 970515016, 970515024*	1	-
33	580457501	GROMMET *For all EXCEPT 967861912, 967861934, 967861936, 970515014, 970515016, 970515024. GROMMET FUEL LINE.*	1	-
34	592969801	SPACER PLATE *SPACER PLATE*	1	-
1	545062401	FRONT HANDLE *FRONT HANDLE*	1	-
2	545062202	REAR HANDLE W/OVMLD 240E *For 967861912, 967861934, 967861936, 970515014, 970515016, 970515024*	1	-
2	545062201	REAR HANDLE *For all EXCEPT For 967861912, 967861934, 967861936, 970515014, 970515016, 970515024. REAR HANDLE NO OVERMOLD.*	1	-
3	545062302	REAR HANDLE COVER W/OVMLD 240E *For 967861912, 967861934, 967861936, 970515014, 970515016, 970515024*	1	-
3	545062301	REAR HANDLE COVER 235/235E *For all EXCEPT For 967861912, 967861934, 967861936, 970515014, 970515016, 970515024. REAR HANDLE COVER NO OVERMOLD.*	1	-
4	545062601	LOCKOUT- THROTTLE *LOCKOUT- THROTTLE*	1	-

Ref.	Article N.	Description	Qty	Kit
6	578246701	TRIGGER *TRIGGER ASSEMBLY GRAY*	1	-
7	545033901	ISOLATOR *ISOLATOR ASU FRONT ISOLATOR*	1	-
8	545076301	ISOLATION LIMITER SCREW *ISOLATION LIMITER SCREW M5.28 - 1.8 X 14.75 PL HEX M4 SPECIAL*	1	-
9	530016433	SCREW *SCREW #8-16 X 15.1 PL PAN TRX T25*	3	-
10	530016349	SCREW *SCREW*	2	-
11	530016432	SCREW *SCREW SCREW M5.38-14X22.225MM*	2	-
12	578862201	THROTTLE TRIGGER *KIT TRIGGER & LOCKOUT*	1	-
1	575635502	FLYWHEEL *FLYWHEEL ASSY*	1	-
2	530015127	WASHER *WASHER 5/16 RAMP CONICAL*	1	-
3	530016134	NUT *NUT HEX M8-1 RH GR8*	1	-
4	575803501	MODULE *MODULE*	1	-
5	545121901	SCREW *SCREW M4-0.7X16MM SEMS T20*	2	-
6	545079901	ASSY- WIRE HARNESS *ASSY- WIRE HARNESS*	1	-
1	574266401	NUT *NUT 10MM BRASS*	1	-
2	545076901	EXHAUST PLATE *EXHAUST PLATE*	1	-
3	545167401	SCREEN *SCREEN ARRESTOR GASKET*	1	-
4	530016338	BOLT *BOLT*	2	-
5	586094301	MUFFLER *MUFFLER ASSY*	1	-
6	530054884	MUFFLER GASKET *MUFFLER GASKET*	1	-
7	545066901	MUFFLER BACK PLATE *MUFFLER BACK PLATE*	1	-
8	545008027	KIT *KIT SPARK ARRESTOR*	1	-
9	545180843	MUFFLER	1	-

Ref.	Article N.	Description	Qty	Kit
		MUFFLER KIT COMPLETE		
1	530021179	SCREW *SCREW*	1	-
2	530059677	SLEEVE *SLEEVE*	1	-
3	530021180	SPRING *Spring*	1	-
4	530016080	SCREW *SCREW*	1	-
5	545058201	PULLEY *PULLEY*	1	-
6	530042095	SPRING *SPRING*	1	-
7	530071966	STARTER PULLEY *EPS STARTER KIT (INCL. PULLEY)*	1	-
8	545063801	BAFFLE *BAFFLE*	1	-
9	545063701	FAN HOUSING *FAN HOUSING*	1	-
10	545010010	HANDLE *HANDLE ROPE ASSY*	1	-
11	530016432	SCREW *SCREW SCREW M5.38-14X22.225MM*	4	-
12	545008024	KIT *KIT COMPLETE*	1	-
13	594914101	DECAL *DECAL FAN HOUSING 120 MARK II*	1	-
1	545008028	STARTER PULLEY *KIT STD STARTER*	1	-
2	530015920	SCREW *SCREW*	1	-
3	530016080	SCREW *SCREW*	1	-
4	530057890	STARTER PULLEY *STARTER PULLEY*	1	-
5	545010010	HANDLE *HANDLE ROPE ASSY*	1	-
6	545008013	SPRING CASSETTE ASSY *SPRING*	1	-
7	545063801	BAFFLE *BAFFLE*	1	-
8	545063701	FAN HOUSING *FAN HOUSING*	1	-

Ref.	Article N.	Description	Qty	Kit
9	530016432	SCREW *SCREW SCREW M5.38-14X22.225MM*	4	-
10	545008025	STARTER ASSY *KIT COMPLETE*	1	-
11	594914101	DECAL *DECAL FAN HOUSING 120 MARK II*	1	-
1	587609701	KIT *KIT CARB REPAIR*	1	-
2	573977601	KIT *CARBURETOR GASKET*	1	-
3	545008030	PURGE *PURGE AND LINE ASSEMBLY*	1	-
4	586936202	CARBURETTOR *CARBURETOR*	1	-

CHAIN BRAKE

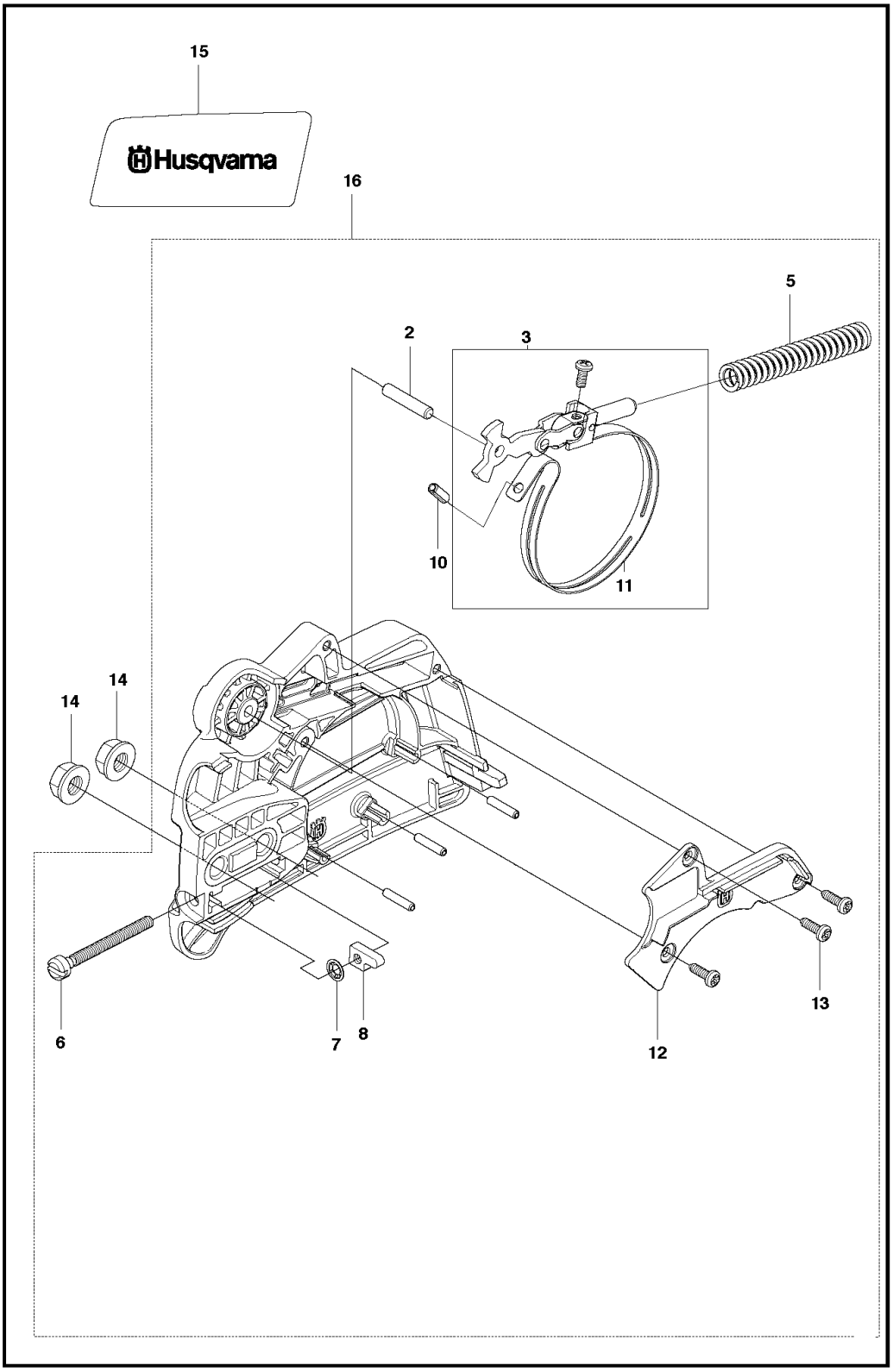

Ref.	Article N.	Description	Qty	Kit
1	587465401	WRENCH *For all EXCEPT For 967861912, 967861934, 967861936. WRENCH CHAINBRAKE RESET.*	1	-
1	587417201	WRENCH *For 967861912, 967861934, 967861936, 970515014, 970515016, 970515024*	1	-
1	586936202	CARBURETTOR	1	-

Ref.	Article N.	Description	Qty	Kit
		CARBURETOR WITH PURGE BULB		
2	577815201	THROTTLE *THROTTLE WIRE*	1	-
3	575493401	AIR FILTER *HOUSING*	1	-
4	545061801	AIR FILTER *AIR FILTER*	1	-
5	545151801	PLATE *FILTER PLATE*	1	-
6	530016101	NUT *NUT*	2	-
7	545061901	ISOLATOR *ISOLATOR FILTER HOUSING*	1	-
8	545063401	SWITCH. SPRING *SWITCH SPRING*	1	-
9	545061701	SWITCH LEVER *SWITCH LEVER*	1	-
10	545061601	CHOKE KNOB *CHOKE KNOB*	1	-
11	545061501	CARB ADAPTOR SEAL *CARB ADAPTOR SEAL*	1	-
13	577636501	ADAPTOR *ADAPTOR CARBURETOR*	1	-
15	545033701	STUD-CARBURETOR *STUD-CARBURETOR*	2	-
16	545158301	CARB ADAPTOR SCREW *CARB ADAPTOR SCREW*	4	-
17	530016080	SCREW *SCREW*	1	-
18	545074901	TOP STUD-CARBURETOR *TOP STUD-CARBURETOR*	1	-
19	545081892	GASKET KIT *GASKET KIT*	1	-
20	530016349	SCREW *SCREW*	1	-
2	530057950	PIN. DOWEL *PIN. DOWEL*	1	-
3	578936401	LINK	1	-
4	574780301	SCREW *SCREW M3.63-1.34 X 8MM TORX*	1	-
5	530016415	SPRING COMPRESSION *SPRING COMPRESSION*	1	-
6	530016110	SCREW	1	-

Ref.	Article N.	Description	Qty	Kit
		SCREW BAR ADJUSTMENT		
7	530038593	RETAINER *RETAINER BAR ADJUSTMENT*	1	-
8	530015826	PEN *PIN BAR ADJUSTING*	1	-
10	530015913	PEN *PIN BRAKE BAND*	1	-
11	530057923	BRAKE BAND *BRAKE BAND*	1	-
12	525743001	COVER *COVER CHAIN BRAKE*	1	-
13	545227101	SCREW *SCREW*	3	-
14	530015917	NUT *NUT*	2	-
15	545118701	DECAL *DECAL*	1	-
16	525628901	CHAIN BRAKE ASSY *CHAIN BRAKE ASSY*	1	-
1	530014949	CLUTCH *CLUTCH*	1	-
2	530015611	WASHER *WASHER*	1	-
3	530047061	CLUTCH DRUM ASSY *For all EXCEPT 967861902. CLUTCH DRUM ASSY SPUR 3/8 6T.*	1	-
3	530048132	CLUTCH DRUM *For 967861902. CLUTCH DRUM ASSY SPUR .325 7T.*	1	-
4	579621501	WASHER *WASHER THRUST*	1	-
5	525318401	DUST SEAL *DUST SEAL OIL PUMP*	1	-
6	530037820	WORM GEAR *PISTON*	1	-
7	581063901	OIL PUMP ASSY *OIL PUMP ASSY COMPLETE*	1	-
8	545227101	SCREW	1	-
9	545227501	BLOCK *BLOCK OIL*	1	-
10	530049477	ELBOW *ELBOW*	1	-
11	545069401	SEAL *SEAL*	1	-
12	530056533	SCREEN	1	-

Ref.	Article N.	Description	Qty	Kit
		SCREEN		
1	576543201	CYLINDER COVER ASSY *KIT CYLINDER SHIELD*	1	-
2	574320601	SCREW *SCREW M5-0.8X25*	3	-
3	545116502	DECAL *DECAL STARTING INSTRUCTIONS*	1	-
4	545165957	SIGN *DECAL WARNING*	1	-
5	579173401	KIT *KIT CHASSIS BRASS INSERTS*	1	-
1	576243901	BEARING	2	-
2	580302601	CRANKSHAFT	1	-
1	581608001	SEAL *SEAL RADIAL BEARING 12 X 36.2 X 3.7*	2	-
3	577830802	KIT *KIT CRANKSHAFT COMPLETE HARDMOUNT BEARING*	1	-
4	585621401	BEARING *BEARING 37MM OD*	2	-
1	577831102	KIT *For all EXCEPT For 967861912, 967861934, 967861936, 970515014, 970515016, 970515024. KIT PISTON AND CYLINDER HARDMOUNT BEARING.*	1	-
1	577831101	KIT *For 967861912, 967861934, 967861936, 970515014, 970515016, 970515024*	1	-
2	545081501	BOLT *BOLT CYLINDER*	4	-
3	574190901	INSERT *INSERT LEFT 38CC CYLINDER*	1	-
4	574190801	INSERT *INSERT RIGHT 38CC CYLINDER*	1	-
5	585040601	PISTON RING *For all EXCEPT For 967861912, 967861934, 967861936, 970515014, 970515016, 970515024. PISTON RING 38CC PISTON RING.*	1	-
5	530012608	PISTON RING *For 967861912, 967861934, 967861936, 970515014, 970515016, 970515024*	1	-
8	530015697	LOCKING RING *LOCKING RING*	2	-
9	503235108	SPARK PLUG *SPARK PLUG M14X1.25 RCJ7Y*	1	-
10	545081894	KIT *For 967861912, 967861934, 967861936, 970515014, 970515016, 970515024*	1	-
10	577831302	KIT	1	-

Ref.	Article N.	Description	Qty	Kit
		For all EXCEPT For 967861912, 967861934, 967861936, 970515014, 970515016, 970515024. KIT PISTON HARDMOUNT BEARING.		
1	577611901	HAND GUARD *HAND GUARD ASSY HHS*	1	-
2	545127301	BOSS *BOSS SCREW HANDGUARD*	1	-
3	545061201	REAR WHEEL *REAR WHEEL*	1	-
4	545227101	SCREW *SCREW*	1	-
5	545075401	GROMMET *GROMMET REAR WALL*	1	-
6	545071401	BAR *BAR PLATE MOUNTING*	1	-
7	545071301	CAP. SPRING HANDGUARD *CAP. SPRING HANDGUARD*	1	-
8	545071201	SPRING. HANDGUARD POSITION *SPRING. HANDGUARD POSITION*	1	-
11	587026801	CHASSIS *For all EXCEPT 967861912, 967861934, 967861936, 970515014, 970515016, 970515024. CHASSIS ASSEMBLY MACH. BEARING.*	1	-
11	579665204	CHASSIS *For 970515014, 970515016, 970515024, 967861912, 967861936, 967861934*	1	-
13	529310301	BOLT *BOLT M8 X 1.25*	2	-
14	545033501	HOSE *HOSE*	1	-
15	530029868	PLUG *PLUG*	1	-
16	530026119	CHECK VALVE *CHECK VALVE DUCKBILL*	1	-
17	580727101	FUEL HOSE *FUEL HOSE KIT LP100 5.3 O.D.*	1	-
18	530023877	NIPPLE *NIPPLE FITTING - FUEL LINE*	1	-
20	545061901	ISOLATOR *ISOLATOR FILTER HOUSING*	1	-
21	544111203	TANK CAP ASSY *TANK CAP ASSY GREY*	2	-
22	530015906	SCREW *SCREW*	2	-
23	545033801	ISOLATOR *ISOLATOR ASSY FRONT*	1	-

Ref.	Article N.	Description	Qty	Kit
25	545063101	SPRING *For all EXCEPT 967861912, 967861934, 967861936, 970515014, 970515016, 970515024. SPRING REAR ISOLATOR.*	1	-
25	577540601	SPRING *For 967861912, 967861934, 967861936, 970515014, 970515016, 970515024*	1	-
26	577167201	FUEL FILTER *ASSEMBLY FUEL PICKUP PRE FLUSHED*	1	-
27	580727101	FUEL HOSE *FUEL HOSE KIT LP100 5.3 O.D.*	1	-
28	530015814	SCREW *SCREW PT 60/10-14*	1	-
29	530029850	CHAIN CATCHER *CHAIN CATCHER*	1	-
30	530038990	FELLING DOG *FELLING DOG*	1	-
31	530016439	SCREW *SCREW*	2	-
32	530014381	FELLING DOG *FELLING DOG KIT SPIKE ASSEMBLY*	1	-
33	503735801	BUSHING *For 967861912, 967861934, 967861936, 970515014, 970515016, 970515024*	1	-
33	580457501	GROMMET *For all EXCEPT 967861912, 967861934, 967861936, 970515014, 970515016, 970515024. GROMMET FUEL LINE.*	1	-
34	592969801	SPACER PLATE *SPACER PLATE*	1	-
1	545062401	FRONT HANDLE *FRONT HANDLE*	1	-
2	545062202	REAR HANDLE W/OVMLD 240E *For 967861912, 967861934, 967861936, 970515014, 970515016, 970515024*	1	-
2	545062201	REAR HANDLE *For all EXCEPT For 967861912, 967861934, 967861936, 970515014, 970515016, 970515024. REAR HANDLE NO OVERMOLD.*	1	-
3	545062302	REAR HANDLE COVER W/OVMLD 240E *For 967861912, 967861934, 967861936, 970515014, 970515016, 970515024*	1	-
3	545062301	REAR HANDLE COVER 235/235E *For all EXCEPT For 967861912, 967861934, 967861936, 970515014, 970515016, 970515024. REAR HANDLE COVER NO OVERMOLD.*	1	-
4	545062601	LOCKOUT- THROTTLE *LOCKOUT- THROTTLE*	1	-
6	578246701	TRIGGER *TRIGGER ASSEMBLY GRAY*	1	-

Ref.	Article N.	Description	Qty	Kit
7	545033901	ISOLATOR *ISOLATOR ASU FRONT ISOLATOR*	1	-
8	545076301	ISOLATION LIMITER SCREW *ISOLATION LIMITER SCREW M5.28 - 1.8 X 14.75 PL HEX M4 SPECIAL*	1	-
9	530016433	SCREW *SCREW #8-16 X 15.1 PL PAN TRX T25*	3	-
10	530016349	SCREW *SCREW*	2	-
11	530016432	SCREW *SCREW SCREW M5.38-14X22.225MM*	2	-
12	578862201	THROTTLE TRIGGER *KIT TRIGGER & LOCKOUT*	1	-
1	575635502	FLYWHEEL *FLYWHEEL ASSY*	1	-
2	530015127	WASHER *WASHER 5/16 RAMP CONICAL*	1	-
3	530016134	NUT *NUT HEX M8-1 RH GR8*	1	-
4	575803501	MODULE *MODULE*	1	-
5	545121901	SCREW *SCREW M4-0.7X16MM SEMS T20*	2	-
6	545079901	ASSY- WIRE HARNESS *ASSY- WIRE HARNESS*	1	-
1	574266401	NUT *NUT 10MM BRASS*	1	-
2	545076901	EXHAUST PLATE *EXHAUST PLATE*	1	-
3	545167401	SCREEN *SCREEN ARRESTOR GASKET*	1	-
4	530016338	BOLT *BOLT*	2	-
5	586094301	MUFFLER *MUFFLER ASSY*	1	-
6	530054884	MUFFLER GASKET *MUFFLER GASKET*	1	-
7	545066901	MUFFLER BACK PLATE *MUFFLER BACK PLATE*	1	-
8	545008027	KIT *KIT SPARK ARRESTOR*	1	-
9	545180843	MUFFLER *MUFFLER KIT COMPLETE*	1	-
1	530021179	SCREW	1	-

Ref.	Article N.	Description	Qty	Kit
		SCREW		
2	530059677	SLEEVE *SLEEVE*	1	-
3	530021180	SPRING *Spring*	1	-
4	530016080	SCREW *SCREW*	1	-
5	545058201	PULLEY *PULLEY*	1	-
6	530042095	SPRING *SPRING*	1	-
7	530071966	STARTER PULLEY *EPS STARTER KIT (INCL. PULLEY)*	1	-
8	545063801	BAFFLE *BAFFLE*	1	-
9	545063701	FAN HOUSING *FAN HOUSING*	1	-
10	545010010	HANDLE *HANDLE ROPE ASSY*	1	-
11	530016432	SCREW *SCREW SCREW M5.38-14X22.225MM*	4	-
12	545008024	KIT *KIT COMPLETE*	1	-
13	594914101	DECAL *DECAL FAN HOUSING 120 MARK II*	1	-
1	545008028	STARTER PULLEY *KIT STD STARTER*	1	-
2	530015920	SCREW *SCREW*	1	-
3	530016080	SCREW *SCREW*	1	-
4	530057890	STARTER PULLEY *STARTER PULLEY*	1	-
5	545010010	HANDLE *HANDLE ROPE ASSY*	1	-
6	545008013	SPRING CASSETTE ASSY *SPRING*	1	-
7	545063801	BAFFLE *BAFFLE*	1	-
8	545063701	FAN HOUSING *FAN HOUSING*	1	-
9	530016432	SCREW *SCREW SCREW M5.38-14X22.225MM*	4	-

Ref.	Article N.	Description	Qty	Kit
10	545008025	STARTER ASSY *KIT COMPLETE*	1	-
11	594914101	DECAL *DECAL FAN HOUSING 120 MARK II*	1	-
1	587609701	KIT *KIT CARB REPAIR*	1	-
2	573977601	KIT *CARBURETOR GASKET*	1	-
3	545008030	PURGE *PURGE AND LINE ASSEMBLY*	1	-
4	586936202	CARBURETTOR *CARBURETOR*	1	-

CLUTCH AND OIL PUMP

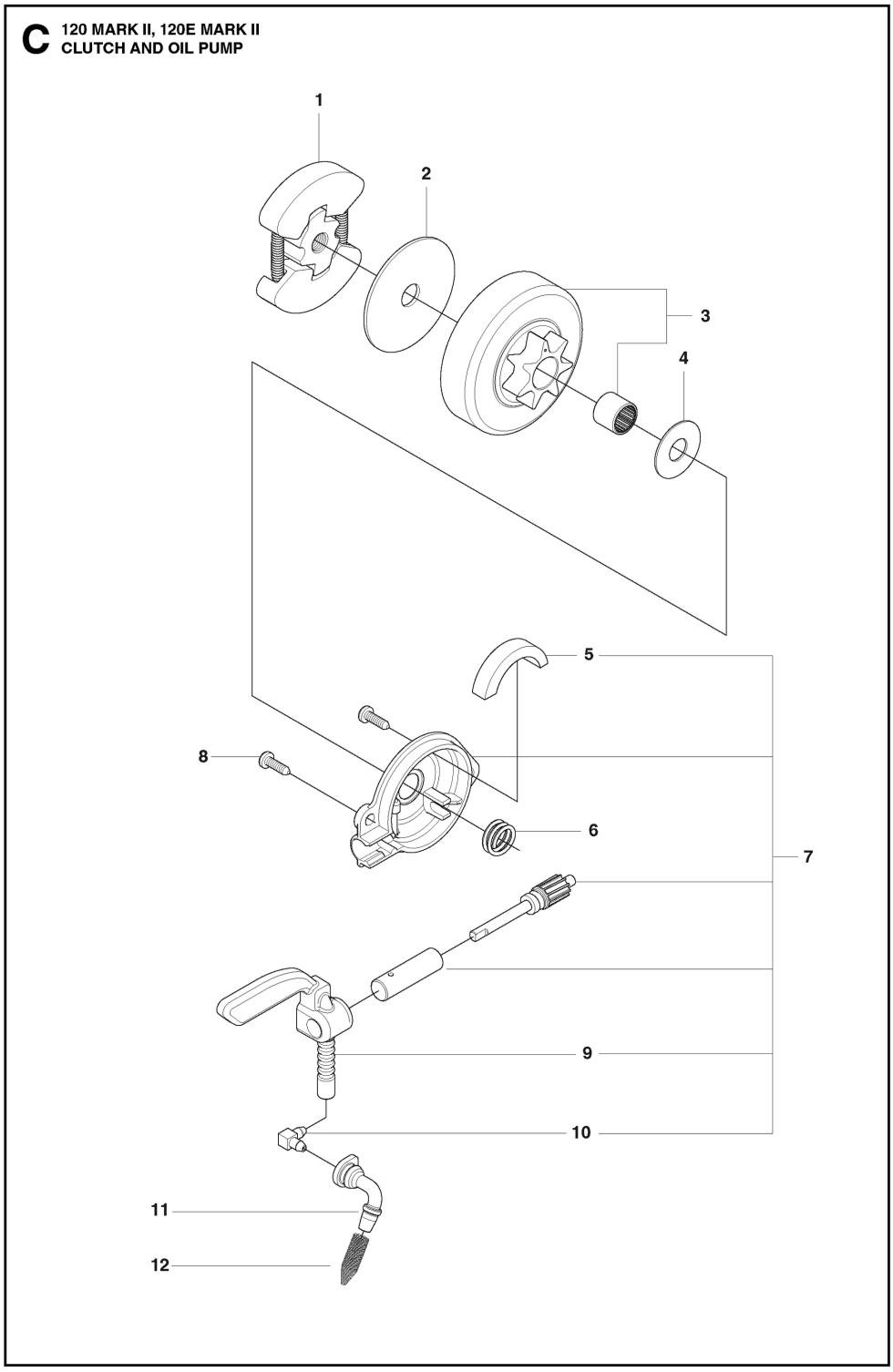

Ref.	Article N.	Description	Qty	Kit
1	587465401	WRENCH *For all EXCEPT For 967861912, 967861934, 967861936. WRENCH CHAINBRAKE RESET.*	1	-
1	587417201	WRENCH *For 967861912, 967861934, 967861936, 970515014, 970515016, 970515024*	1	-
1	586936202	CARBURETTOR	1	-

Ref.	Article N.	Description	Qty	Kit
		CARBURETOR WITH PURGE BULB		
2	577815201	THROTTLE *THROTTLE WIRE*	1	-
3	575493401	AIR FILTER *HOUSING*	1	-
4	545061801	AIR FILTER *AIR FILTER*	1	-
5	545151801	PLATE *FILTER PLATE*	1	-
6	530016101	NUT *NUT*	2	-
7	545061901	ISOLATOR *ISOLATOR FILTER HOUSING*	1	-
8	545063401	SWITCH. SPRING *SWITCH SPRING*	1	-
9	545061701	SWITCH LEVER *SWITCH LEVER*	1	-
10	545061601	CHOKE KNOB *CHOKE KNOB*	1	-
11	545061501	CARB ADAPTOR SEAL *CARB ADAPTOR SEAL*	1	-
13	577636501	ADAPTOR *ADAPTOR CARBURETOR*	1	-
15	545033701	STUD-CARBURETOR *STUD-CARBURETOR*	2	-
16	545158301	CARB ADAPTOR SCREW *CARB ADAPTOR SCREW*	4	-
17	530016080	SCREW *SCREW*	1	-
18	545074901	TOP STUD-CARBURETOR *TOP STUD-CARBURETOR*	1	-
19	545081892	GASKET KIT *GASKET KIT*	1	-
20	530016349	SCREW *SCREW*	1	-
2	530057950	PIN. DOWEL *PIN. DOWEL*	1	-
3	578936401	LINK	1	-
4	574780301	SCREW *SCREW M3.63-1.34 X 8MM TORX*	1	-
5	530016415	SPRING COMPRESSION *SPRING COMPRESSION*	1	-
6	530016110	SCREW	1	-

Ref.	Article N.	Description	Qty	Kit
		SCREW BAR ADJUSTMENT		
7	530038593	RETAINER *RETAINER BAR ADJUSTMENT*	1	-
8	530015826	PEN *PIN BAR ADJUSTING*	1	-
10	530015913	PEN *PIN BRAKE BAND*	1	-
11	530057923	BRAKE BAND *BRAKE BAND*	1	-
12	525743001	COVER *COVER CHAIN BRAKE*	1	-
13	545227101	SCREW *SCREW*	3	-
14	530015917	NUT *NUT*	2	-
15	545118701	DECAL *DECAL*	1	-
16	525628901	CHAIN BRAKE ASSY *CHAIN BRAKE ASSY*	1	-
1	530014949	CLUTCH *CLUTCH*	1	-
2	530015611	WASHER *WASHER*	1	-
3	530047061	CLUTCH DRUM ASSY *For all EXCEPT 967861902. CLUTCH DRUM ASSY SPUR 3/8 6T.*	1	-
3	530048132	CLUTCH DRUM *For 967861902. CLUTCH DRUM ASSY SPUR .325 7T.*	1	-
4	579621501	WASHER *WASHER THRUST*	1	-
5	525318401	DUST SEAL *DUST SEAL OIL PUMP*	1	-
6	530037820	WORM GEAR *PISTON*	1	-
7	581063901	OIL PUMP ASSY *OIL PUMP ASSY COMPLETE*	1	-
8	545227101	SCREW	1	-
9	545227501	BLOCK *BLOCK OIL*	1	-
10	530049477	ELBOW *ELBOW*	1	-
11	545069401	SEAL *SEAL*	1	-
12	530056533	SCREEN	1	-

Ref.	Article N.	Description	Qty	Kit
		SCREEN		
1	576543201	CYLINDER COVER ASSY *KIT CYLINDER SHIELD*	1	-
2	574320601	SCREW *SCREW M5-0.8X25*	3	-
3	545116502	DECAL *DECAL STARTING INSTRUCTIONS*	1	-
4	545165957	SIGN *DECAL WARNING*	1	-
5	579173401	KIT *KIT CHASSIS BRASS INSERTS*	1	-
1	576243901	BEARING	2	-
2	580302601	CRANKSHAFT	1	-
1	581608001	SEAL *SEAL RADIAL BEARING 12 X 36.2 X 3.7*	2	-
3	577830802	KIT *KIT CRANKSHAFT COMPLETE HARDMOUNT BEARING*	1	-
4	585621401	BEARING *BEARING 37MM OD*	2	-
1	577831102	KIT *For all EXCEPT For 967861912, 967861934, 967861936, 970515014, 970515016, 970515024. KIT PISTON AND CYLINDER HARDMOUNT BEARING.*	1	-
1	577831101	KIT *For 967861912, 967861934, 967861936, 970515014, 970515016, 970515024*	1	-
2	545081501	BOLT *BOLT CYLINDER*	4	-
3	574190901	INSERT *INSERT LEFT 38CC CYLINDER*	1	-
4	574190801	INSERT *INSERT RIGHT 38CC CYLINDER*	1	-
5	585040601	PISTON RING *For all EXCEPT For 967861912, 967861934, 967861936, 970515014, 970515016, 970515024. PISTON RING 38CC PISTON RING.*	1	-
5	530012608	PISTON RING *For 967861912, 967861934, 967861936, 970515014, 970515016, 970515024*	1	-
8	530015697	LOCKING RING *LOCKING RING*	2	-
9	503235108	SPARK PLUG *SPARK PLUG M14X1.25 RCJ7Y*	1	-
10	545081894	KIT *For 967861912, 967861934, 967861936, 970515014, 970515016, 970515024*	1	-
10	577831302	KIT	1	-

Ref.	Article N.	Description	Qty	Kit
		For all EXCEPT For 967861912, 967861934, 967861936, 970515014, 970515016, 970515024. KIT PISTON HARDMOUNT BEARING.		
1	577611901	HAND GUARD *HAND GUARD ASSY HHS*	1	-
2	545127301	BOSS *BOSS SCREW HANDGUARD*	1	-
3	545061201	REAR WHEEL *REAR WHEEL*	1	-
4	545227101	SCREW *SCREW*	1	-
5	545075401	GROMMET *GROMMET REAR WALL*	1	-
6	545071401	BAR *BAR PLATE MOUNTING*	1	-
7	545071301	CAP. SPRING HANDGUARD *CAP. SPRING HANDGUARD*	1	-
8	545071201	SPRING. HANDGUARD POSITION *SPRING. HANDGUARD POSITION*	1	-
11	587026801	CHASSIS *For all EXCEPT 967861912, 967861934, 967861936, 970515014, 970515016, 970515024. CHASSIS ASSEMBLY MACH. BEARING.*	1	-
11	579665204	CHASSIS *For 970515014, 970515016, 970515024, 967861912, 967861936, 967861934*	1	-
13	529310301	BOLT *BOLT M8 X 1.25*	2	-
14	545033501	HOSE *HOSE*	1	-
15	530029868	PLUG *PLUG*	1	-
16	530026119	CHECK VALVE *CHECK VALVE DUCKBILL*	1	-
17	580727101	FUEL HOSE *FUEL HOSE KIT LP100 5.3 O.D.*	1	-
18	530023877	NIPPLE *NIPPLE FITTING - FUEL LINE*	1	-
20	545061901	ISOLATOR *ISOLATOR FILTER HOUSING*	1	-
21	544111203	TANK CAP ASSY *TANK CAP ASSY GREY*	2	-
22	530015906	SCREW *SCREW*	2	-
23	545033801	ISOLATOR *ISOLATOR ASSY FRONT*	1	-

Ref.	Article N.	Description	Qty	Kit
25	545063101	SPRING *For all EXCEPT 967861912, 967861934, 967861936, 970515014, 970515016, 970515024. SPRING REAR ISOLATOR.*	1	-
25	577540601	SPRING *For 967861912, 967861934, 967861936, 970515014, 970515016, 970515024*	1	-
26	577167201	FUEL FILTER *ASSEMBLY FUEL PICKUP PRE FLUSHED*	1	-
27	580727101	FUEL HOSE *FUEL HOSE KIT LP100 5.3 O.D.*	1	-
28	530015814	SCREW *SCREW PT 60/10-14*	1	-
29	530029850	CHAIN CATCHER *CHAIN CATCHER*	1	-
30	530038990	FELLING DOG *FELLING DOG*	1	-
31	530016439	SCREW *SCREW*	2	-
32	530014381	FELLING DOG *FELLING DOG KIT SPIKE ASSEMBLY*	1	-
33	503735801	BUSHING *For 967861912, 967861934, 967861936, 970515014, 970515016, 970515024*	1	-
33	580457501	GROMMET *For all EXCEPT 967861912, 967861934, 967861936, 970515014, 970515016, 970515024. GROMMET FUEL LINE.*	1	-
34	592969801	SPACER PLATE *SPACER PLATE*	1	-
1	545062401	FRONT HANDLE *FRONT HANDLE*	1	-
2	545062202	REAR HANDLE W/OVMLD 240E *For 967861912, 967861934, 967861936, 970515014, 970515016, 970515024*	1	-
2	545062201	REAR HANDLE *For all EXCEPT For 967861912, 967861934, 967861936, 970515014, 970515016, 970515024. REAR HANDLE NO OVERMOLD.*	1	-
3	545062302	REAR HANDLE COVER W/OVMLD 240E *For 967861912, 967861934, 967861936, 970515014, 970515016, 970515024*	1	-
3	545062301	REAR HANDLE COVER 235/235E *For all EXCEPT For 967861912, 967861934, 967861936, 970515014, 970515016, 970515024. REAR HANDLE COVER NO OVERMOLD.*	1	-
4	545062601	LOCKOUT- THROTTLE *LOCKOUT- THROTTLE*	1	-
6	578246701	TRIGGER *TRIGGER ASSEMBLY GRAY*	1	-

Ref.	Article N.	Description	Qty	Kit
7	545033901	ISOLATOR *ISOLATOR ASU FRONT ISOLATOR*	1	-
8	545076301	ISOLATION LIMITER SCREW *ISOLATION LIMITER SCREW M5.28 - 1.8 X 14.75 PL HEX M4 SPECIAL*	1	-
9	530016433	SCREW *SCREW #8-16 X 15.1 PL PAN TRX T25*	3	-
10	530016349	SCREW *SCREW*	2	-
11	530016432	SCREW *SCREW SCREW M5.38-14X22.225MM*	2	-
12	578862201	THROTTLE TRIGGER *KIT TRIGGER & LOCKOUT*	1	-
1	575635502	FLYWHEEL *FLYWHEEL ASSY*	1	-
2	530015127	WASHER *WASHER 5/16 RAMP CONICAL*	1	-
3	530016134	NUT *NUT HEX M8-1 RH GR8*	1	-
4	575803501	MODULE *MODULE*	1	-
5	545121901	SCREW *SCREW M4-0.7X16MM SEMS T20*	2	-
6	545079901	ASSY- WIRE HARNESS *ASSY- WIRE HARNESS*	1	-
1	574266401	NUT *NUT 10MM BRASS*	1	-
2	545076901	EXHAUST PLATE *EXHAUST PLATE*	1	-
3	545167401	SCREEN *SCREEN ARRESTOR GASKET*	1	-
4	530016338	BOLT *BOLT*	2	-
5	586094301	MUFFLER *MUFFLER ASSY*	1	-
6	530054884	MUFFLER GASKET *MUFFLER GASKET*	1	-
7	545066901	MUFFLER BACK PLATE *MUFFLER BACK PLATE*	1	-
8	545008027	KIT *KIT SPARK ARRESTOR*	1	-
9	545180843	MUFFLER *MUFFLER KIT COMPLETE*	1	-
1	530021179	SCREW	1	-

Ref.	Article N.	Description	Qty	Kit
		SCREW		
2	530059677	SLEEVE *SLEEVE*	1	-
3	530021180	SPRING *Spring*	1	-
4	530016080	SCREW *SCREW*	1	-
5	545058201	PULLEY *PULLEY*	1	-
6	530042095	SPRING *SPRING*	1	-
7	530071966	STARTER PULLEY *EPS STARTER KIT (INCL. PULLEY)*	1	-
8	545063801	BAFFLE *BAFFLE*	1	-
9	545063701	FAN HOUSING *FAN HOUSING*	1	-
10	545010010	HANDLE *HANDLE ROPE ASSY*	1	-
11	530016432	SCREW *SCREW SCREW M5.38-14X22.225MM*	4	-
12	545008024	KIT *KIT COMPLETE*	1	-
13	594914101	DECAL *DECAL FAN HOUSING 120 MARK II*	1	-
1	545008028	STARTER PULLEY *KIT STD STARTER*	1	-
2	530015920	SCREW *SCREW*	1	-
3	530016080	SCREW *SCREW*	1	-
4	530057890	STARTER PULLEY *STARTER PULLEY*	1	-
5	545010010	HANDLE *HANDLE ROPE ASSY*	1	-
6	545008013	SPRING CASSETTE ASSY *SPRING*	1	-
7	545063801	BAFFLE *BAFFLE*	1	-
8	545063701	FAN HOUSING *FAN HOUSING*	1	-
9	530016432	SCREW *SCREW SCREW M5.38-14X22.225MM*	4	-

Ref.	Article N.	Description	Qty	Kit
10	545008025	STARTER ASSY *KIT COMPLETE*	1	-
11	594914101	DECAL *DECAL FAN HOUSING 120 MARK II*	1	-
1	587609701	KIT *KIT CARB REPAIR*	1	-
2	573977601	KIT *CARBURETOR GASKET*	1	-
3	545008030	PURGE *PURGE AND LINE ASSEMBLY*	1	-
4	586936202	CARBURETTOR *CARBURETOR*	1	-

COVER

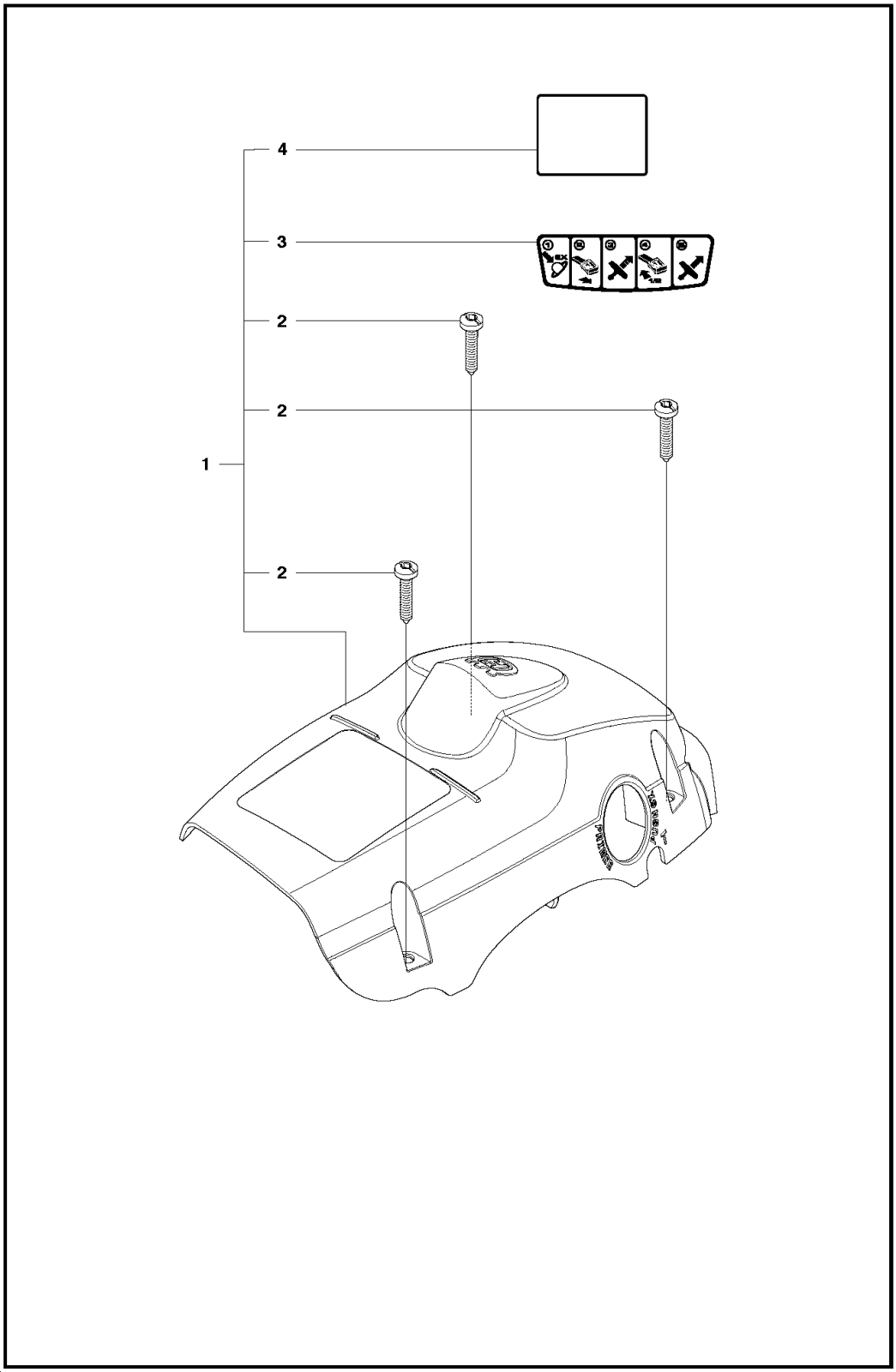

Ref.	Article N.	Description	Qty	Kit
1	587465401	WRENCH *For all EXCEPT For 967861912, 967861934, 967861936. WRENCH CHAINBRAKE RESET.*	1	-
1	587417201	WRENCH *For 967861912, 967861934, 967861936, 970515014, 970515016, 970515024*	1	-
1	586936202	CARBURETTOR	1	-

Ref.	Article N.	Description	Qty	Kit
		CARBURETOR WITH PURGE BULB		
2	577815201	THROTTLE *THROTTLE WIRE*	1	-
3	575493401	AIR FILTER *HOUSING*	1	-
4	545061801	AIR FILTER *AIR FILTER*	1	-
5	545151801	PLATE *FILTER PLATE*	1	-
6	530016101	NUT *NUT*	2	-
7	545061901	ISOLATOR *ISOLATOR FILTER HOUSING*	1	-
8	545063401	SWITCH. SPRING *SWITCH SPRING*	1	-
9	545061701	SWITCH LEVER *SWITCH LEVER*	1	-
10	545061601	CHOKE KNOB *CHOKE KNOB*	1	-
11	545061501	CARB ADAPTOR SEAL *CARB ADAPTOR SEAL*	1	-
13	577636501	ADAPTOR *ADAPTOR CARBURETOR*	1	-
15	545033701	STUD-CARBURETOR *STUD-CARBURETOR*	2	-
16	545158301	CARB ADAPTOR SCREW *CARB ADAPTOR SCREW*	4	-
17	530016080	SCREW *SCREW*	1	-
18	545074901	TOP STUD-CARBURETOR *TOP STUD-CARBURETOR*	1	-
19	545081892	GASKET KIT *GASKET KIT*	1	-
20	530016349	SCREW *SCREW*	1	-
2	530057950	PIN. DOWEL *PIN. DOWEL*	1	-
3	578936401	LINK	1	-
4	574780301	SCREW *SCREW M3.63-1.34 X 8MM TORX*	1	-
5	530016415	SPRING COMPRESSION *SPRING COMPRESSION*	1	-
6	530016110	SCREW	1	-

Ref.	Article N.	Description	Qty	Kit
		SCREW BAR ADJUSTMENT		
7	530038593	RETAINER *RETAINER BAR ADJUSTMENT*	1	-
8	530015826	PEN *PIN BAR ADJUSTING*	1	-
10	530015913	PEN *PIN BRAKE BAND*	1	-
11	530057923	BRAKE BAND *BRAKE BAND*	1	-
12	525743001	COVER *COVER CHAIN BRAKE*	1	-
13	545227101	SCREW *SCREW*	3	-
14	530015917	NUT *NUT*	2	-
15	545118701	DECAL *DECAL*	1	-
16	525628901	CHAIN BRAKE ASSY *CHAIN BRAKE ASSY*	1	-
1	530014949	CLUTCH *CLUTCH*	1	-
2	530015611	WASHER *WASHER*	1	-
3	530047061	CLUTCH DRUM ASSY *For all EXCEPT 967861902. CLUTCH DRUM ASSY SPUR 3/8 6T.*	1	-
3	530048132	CLUTCH DRUM *For 967861902. CLUTCH DRUM ASSY SPUR .325 7T.*	1	-
4	579621501	WASHER *WASHER THRUST*	1	-
5	525318401	DUST SEAL *DUST SEAL OIL PUMP*	1	-
6	530037820	WORM GEAR *PISTON*	1	-
7	581063901	OIL PUMP ASSY *OIL PUMP ASSY COMPLETE*	1	-
8	545227101	SCREW	1	-
9	545227501	BLOCK *BLOCK OIL*	1	-
10	530049477	ELBOW *ELBOW*	1	-
11	545069401	SEAL *SEAL*	1	-
12	530056533	SCREEN	1	-

Ref.	Article N.	Description	Qty	Kit
		SCREEN		
1	576543201	CYLINDER COVER ASSY *KIT CYLINDER SHIELD*	1	-
2	574320601	SCREW *SCREW M5-0.8X25*	3	-
3	545116502	DECAL *DECAL STARTING INSTRUCTIONS*	1	-
4	545165957	SIGN *DECAL WARNING*	1	-
5	579173401	KIT *KIT CHASSIS BRASS INSERTS*	1	-
1	576243901	BEARING	2	-
2	580302601	CRANKSHAFT	1	-
1	581608001	SEAL *SEAL RADIAL BEARING 12 X 36.2 X 3.7*	2	-
3	577830802	KIT *KIT CRANKSHAFT COMPLETE HARDMOUNT BEARING*	1	-
4	585621401	BEARING *BEARING 37MM OD*	2	-
1	577831102	KIT *For all EXCEPT For 967861912, 967861934, 967861936, 970515014, 970515016, 970515024. KIT PISTON AND CYLINDER HARDMOUNT BEARING.*	1	-
1	577831101	KIT *For 967861912, 967861934, 967861936, 970515014, 970515016, 970515024*	1	-
2	545081501	BOLT *BOLT CYLINDER*	4	-
3	574190901	INSERT *INSERT LEFT 38CC CYLINDER*	1	-
4	574190801	INSERT *INSERT RIGHT 38CC CYLINDER*	1	-
5	585040601	PISTON RING *For all EXCEPT For 967861912, 967861934, 967861936, 970515014, 970515016, 970515024. PISTON RING 38CC PISTON RING.*	1	-
5	530012608	PISTON RING *For 967861912, 967861934, 967861936, 970515014, 970515016, 970515024*	1	-
8	530015697	LOCKING RING *LOCKING RING*	2	-
9	503235108	SPARK PLUG *SPARK PLUG M14X1.25 RCJ7Y*	1	-
10	545081894	KIT *For 967861912, 967861934, 967861936, 970515014, 970515016, 970515024*	1	-
10	577831302	KIT	1	-

Ref.	Article N.	Description	Qty	Kit
		For all EXCEPT For 967861912, 967861934, 967861936, 970515014, 970515016, 970515024. KIT PISTON HARDMOUNT BEARING.		
1	577611901	HAND GUARD *HAND GUARD ASSY HHS*	1	-
2	545127301	BOSS *BOSS SCREW HANDGUARD*	1	-
3	545061201	REAR WHEEL *REAR WHEEL*	1	-
4	545227101	SCREW *SCREW*	1	-
5	545075401	GROMMET *GROMMET REAR WALL*	1	-
6	545071401	BAR *BAR PLATE MOUNTING*	1	-
7	545071301	CAP. SPRING HANDGUARD *CAP. SPRING HANDGUARD*	1	-
8	545071201	SPRING. HANDGUARD POSITION *SPRING. HANDGUARD POSITION*	1	-
11	587026801	CHASSIS *For all EXCEPT 967861912, 967861934, 967861936, 970515014, 970515016, 970515024. CHASSIS ASSEMBLY MACH. BEARING.*	1	-
11	579665204	CHASSIS *For 970515014, 970515016, 970515024, 967861912, 967861936, 967861934*	1	-
13	529310301	BOLT *BOLT M8 X 1.25*	2	-
14	545033501	HOSE *HOSE*	1	-
15	530029868	PLUG *PLUG*	1	-
16	530026119	CHECK VALVE *CHECK VALVE DUCKBILL*	1	-
17	580727101	FUEL HOSE *FUEL HOSE KIT LP100 5.3 O.D.*	1	-
18	530023877	NIPPLE *NIPPLE FITTING - FUEL LINE*	1	-
20	545061901	ISOLATOR *ISOLATOR FILTER HOUSING*	1	-
21	544111203	TANK CAP ASSY *TANK CAP ASSY GREY*	2	-
22	530015906	SCREW *SCREW*	2	-
23	545033801	ISOLATOR *ISOLATOR ASSY FRONT*	1	-

Ref.	Article N.	Description	Qty	Kit
25	545063101	SPRING *For all EXCEPT 967861912, 967861934, 967861936, 970515014, 970515016, 970515024. SPRING REAR ISOLATOR.*	1	-
25	577540601	SPRING *For 967861912, 967861934, 967861936, 970515014, 970515016, 970515024*	1	-
26	577167201	FUEL FILTER *ASSEMBLY FUEL PICKUP PRE FLUSHED*	1	-
27	580727101	FUEL HOSE *FUEL HOSE KIT LP100 5.3 O.D.*	1	-
28	530015814	SCREW *SCREW PT 60/10-14*	1	-
29	530029850	CHAIN CATCHER *CHAIN CATCHER*	1	-
30	530038990	FELLING DOG *FELLING DOG*	1	-
31	530016439	SCREW *SCREW*	2	-
32	530014381	FELLING DOG *FELLING DOG KIT SPIKE ASSEMBLY*	1	-
33	503735801	BUSHING *For 967861912, 967861934, 967861936, 970515014, 970515016, 970515024*	1	-
33	580457501	GROMMET *For all EXCEPT 967861912, 967861934, 967861936, 970515014, 970515016, 970515024. GROMMET FUEL LINE.*	1	-
34	592969801	SPACER PLATE *SPACER PLATE*	1	-
1	545062401	FRONT HANDLE *FRONT HANDLE*	1	-
2	545062202	REAR HANDLE W/OVMLD 240E *For 967861912, 967861934, 967861936, 970515014, 970515016, 970515024*	1	-
2	545062201	REAR HANDLE *For all EXCEPT For 967861912, 967861934, 967861936, 970515014, 970515016, 970515024. REAR HANDLE NO OVERMOLD.*	1	-
3	545062302	REAR HANDLE COVER W/OVMLD 240E *For 967861912, 967861934, 967861936, 970515014, 970515016, 970515024*	1	-
3	545062301	REAR HANDLE COVER 235/235E *For all EXCEPT For 967861912, 967861934, 967861936, 970515014, 970515016, 970515024. REAR HANDLE COVER NO OVERMOLD.*	1	-
4	545062601	LOCKOUT- THROTTLE *LOCKOUT- THROTTLE*	1	-
6	578246701	TRIGGER *TRIGGER ASSEMBLY GRAY*	1	-

Ref.	Article N.	Description	Qty	Kit
7	545033901	ISOLATOR *ISOLATOR ASU FRONT ISOLATOR*	1	-
8	545076301	ISOLATION LIMITER SCREW *ISOLATION LIMITER SCREW M5.28 - 1.8 X 14.75 PL HEX M4 SPECIAL*	1	-
9	530016433	SCREW *SCREW #8-16 X 15.1 PL PAN TRX T25*	3	-
10	530016349	SCREW *SCREW*	2	-
11	530016432	SCREW *SCREW SCREW M5.38-14X22.225MM*	2	-
12	578862201	THROTTLE TRIGGER *KIT TRIGGER & LOCKOUT*	1	-
1	575635502	FLYWHEEL *FLYWHEEL ASSY*	1	-
2	530015127	WASHER *WASHER 5/16 RAMP CONICAL*	1	-
3	530016134	NUT *NUT HEX M8-1 RH GR8*	1	-
4	575803501	MODULE *MODULE*	1	-
5	545121901	SCREW *SCREW M4-0.7X16MM SEMS T20*	2	-
6	545079901	ASSY- WIRE HARNESS *ASSY- WIRE HARNESS*	1	-
1	574266401	NUT *NUT 10MM BRASS*	1	-
2	545076901	EXHAUST PLATE *EXHAUST PLATE*	1	-
3	545167401	SCREEN *SCREEN ARRESTOR GASKET*	1	-
4	530016338	BOLT *BOLT*	2	-
5	586094301	MUFFLER *MUFFLER ASSY*	1	-
6	530054884	MUFFLER GASKET *MUFFLER GASKET*	1	-
7	545066901	MUFFLER BACK PLATE *MUFFLER BACK PLATE*	1	-
8	545008027	KIT *KIT SPARK ARRESTOR*	1	-
9	545180843	MUFFLER *MUFFLER KIT COMPLETE*	1	-
1	530021179	SCREW	1	-

Ref.	Article N.	Description	Qty	Kit
		SCREW		
2	530059677	SLEEVE *SLEEVE*	1	-
3	530021180	SPRING *Spring*	1	-
4	530016080	SCREW *SCREW*	1	-
5	545058201	PULLEY *PULLEY*	1	-
6	530042095	SPRING *SPRING*	1	-
7	530071966	STARTER PULLEY *EPS STARTER KIT (INCL. PULLEY)*	1	-
8	545063801	BAFFLE *BAFFLE*	1	-
9	545063701	FAN HOUSING *FAN HOUSING*	1	-
10	545010010	HANDLE *HANDLE ROPE ASSY*	1	-
11	530016432	SCREW *SCREW SCREW M5.38-14X22.225MM*	4	-
12	545008024	KIT *KIT COMPLETE*	1	-
13	594914101	DECAL *DECAL FAN HOUSING 120 MARK II*	1	-
1	545008028	STARTER PULLEY *KIT STD STARTER*	1	-
2	530015920	SCREW *SCREW*	1	-
3	530016080	SCREW *SCREW*	1	-
4	530057890	STARTER PULLEY *STARTER PULLEY*	1	-
5	545010010	HANDLE *HANDLE ROPE ASSY*	1	-
6	545008013	SPRING CASSETTE ASSY *SPRING*	1	-
7	545063801	BAFFLE *BAFFLE*	1	-
8	545063701	FAN HOUSING *FAN HOUSING*	1	-
9	530016432	SCREW *SCREW SCREW M5.38-14X22.225MM*	4	-

Ref.	Article N.	Description	Qty	Kit
10	545008025	STARTER ASSY *KIT COMPLETE*	1	-
11	594914101	DECAL *DECAL FAN HOUSING 120 MARK II*	1	-
1	587609701	KIT *KIT CARB REPAIR*	1	-
2	573977601	KIT *CARBURETOR GASKET*	1	-
3	545008030	PURGE *PURGE AND LINE ASSEMBLY*	1	-
4	586936202	CARBURETTOR *CARBURETOR*	1	-

CRANKSHAFT

For 967861912, 967861934, 967861936

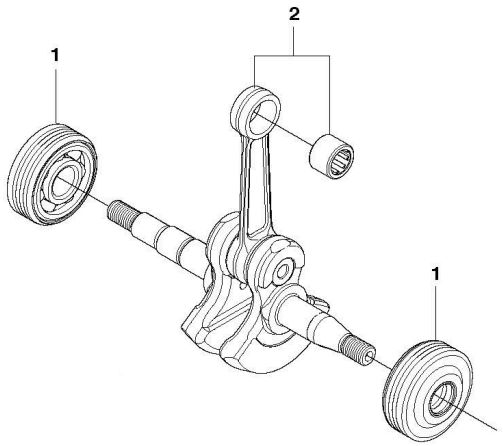

Ref.	Article N.	Description	Qty	Kit
1	587465401	WRENCH *For all EXCEPT For 967861912, 967861934, 967861936. WRENCH CHAINBRAKE RESET.*	1	-
1	587417201	WRENCH *For 967861912, 967861934, 967861936, 970515014, 970515016, 970515024*	1	-
1	586936202	CARBURETTOR	1	-

Ref.	Article N.	Description	Qty	Kit
		CARBURETOR WITH PURGE BULB		
2	577815201	THROTTLE *THROTTLE WIRE*	1	-
3	575493401	AIR FILTER *HOUSING*	1	-
4	545061801	AIR FILTER *AIR FILTER*	1	-
5	545151801	PLATE *FILTER PLATE*	1	-
6	530016101	NUT *NUT*	2	-
7	545061901	ISOLATOR *ISOLATOR FILTER HOUSING*	1	-
8	545063401	SWITCH. SPRING *SWITCH SPRING*	1	-
9	545061701	SWITCH LEVER *SWITCH LEVER*	1	-
10	545061601	CHOKE KNOB *CHOKE KNOB*	1	-
11	545061501	CARB ADAPTOR SEAL *CARB ADAPTOR SEAL*	1	-
13	577636501	ADAPTOR *ADAPTOR CARBURETOR*	1	-
15	545033701	STUD-CARBURETOR *STUD-CARBURETOR*	2	-
16	545158301	CARB ADAPTOR SCREW *CARB ADAPTOR SCREW*	4	-
17	530016080	SCREW *SCREW*	1	-
18	545074901	TOP STUD-CARBURETOR *TOP STUD-CARBURETOR*	1	-
19	545081892	GASKET KIT *GASKET KIT*	1	-
20	530016349	SCREW *SCREW*	1	-
2	530057950	PIN. DOWEL *PIN. DOWEL*	1	-
3	578936401	LINK	1	-
4	574780301	SCREW *SCREW M3.63-1.34 X 8MM TORX*	1	-
5	530016415	SPRING COMPRESSION *SPRING COMPRESSION*	1	-
6	530016110	SCREW	1	-

Ref.	Article N.	Description	Qty	Kit
		SCREW BAR ADJUSTMENT		
7	530038593	RETAINER *RETAINER BAR ADJUSTMENT*	1	-
8	530015826	PEN *PIN BAR ADJUSTING*	1	-
10	530015913	PEN *PIN BRAKE BAND*	1	-
11	530057923	BRAKE BAND *BRAKE BAND*	1	-
12	525743001	COVER *COVER CHAIN BRAKE*	1	-
13	545227101	SCREW *SCREW*	3	-
14	530015917	NUT *NUT*	2	-
15	545118701	DECAL *DECAL*	1	-
16	525628901	CHAIN BRAKE ASSY *CHAIN BRAKE ASSY*	1	-
1	530014949	CLUTCH *CLUTCH*	1	-
2	530015611	WASHER *WASHER*	1	-
3	530047061	CLUTCH DRUM ASSY *For all EXCEPT 967861902. CLUTCH DRUM ASSY SPUR 3/8 6T.*	1	-
3	530048132	CLUTCH DRUM *For 967861902. CLUTCH DRUM ASSY SPUR .325 7T.*	1	-
4	579621501	WASHER *WASHER THRUST*	1	-
5	525318401	DUST SEAL *DUST SEAL OIL PUMP*	1	-
6	530037820	WORM GEAR *PISTON*	1	-
7	581063901	OIL PUMP ASSY *OIL PUMP ASSY COMPLETE*	1	-
8	545227101	SCREW	1	-
9	545227501	BLOCK *BLOCK OIL*	1	-
10	530049477	ELBOW *ELBOW*	1	-
11	545069401	SEAL *SEAL*	1	-
12	530056533	SCREEN	1	-

Ref.	Article N.	Description	Qty	Kit
		SCREEN		
1	576543201	CYLINDER COVER ASSY *KIT CYLINDER SHIELD*	1	-
2	574320601	SCREW *SCREW M5-0.8X25*	3	-
3	545116502	DECAL *DECAL STARTING INSTRUCTIONS*	1	-
4	545165957	SIGN *DECAL WARNING*	1	-
5	579173401	KIT *KIT CHASSIS BRASS INSERTS*	1	-
1	576243901	BEARING	2	-
2	580302601	CRANKSHAFT	1	-
1	581608001	SEAL *SEAL RADIAL BEARING 12 X 36.2 X 3.7*	2	-
3	577830802	KIT *KIT CRANKSHAFT COMPLETE HARDMOUNT BEARING*	1	-
4	585621401	BEARING *BEARING 37MM OD*	2	-
1	577831102	KIT *For all EXCEPT For 967861912, 967861934, 967861936, 970515014, 970515016, 970515024. KIT PISTON AND CYLINDER HARDMOUNT BEARING.*	1	-
1	577831101	KIT *For 967861912, 967861934, 967861936, 970515014, 970515016, 970515024*	1	-
2	545081501	BOLT *BOLT CYLINDER*	4	-
3	574190901	INSERT *INSERT LEFT 38CC CYLINDER*	1	-
4	574190801	INSERT *INSERT RIGHT 38CC CYLINDER*	1	-
5	585040601	PISTON RING *For all EXCEPT For 967861912, 967861934, 967861936, 970515014, 970515016, 970515024. PISTON RING 38CC PISTON RING.*	1	-
5	530012608	PISTON RING *For 967861912, 967861934, 967861936, 970515014, 970515016, 970515024*	1	-
8	530015697	LOCKING RING *LOCKING RING*	2	-
9	503235108	SPARK PLUG *SPARK PLUG M14X1.25 RCJ7Y*	1	-
10	545081894	KIT *For 967861912, 967861934, 967861936, 970515014, 970515016, 970515024*	1	-
10	577831302	KIT	1	-

Ref.	Article N.	Description	Qty	Kit
		For all EXCEPT For 967861912, 967861934, 967861936, 970515014, 970515016, 970515024. KIT PISTON HARDMOUNT BEARING.		
1	577611901	HAND GUARD *HAND GUARD ASSY HHS*	1	-
2	545127301	BOSS *BOSS SCREW HANDGUARD*	1	-
3	545061201	REAR WHEEL *REAR WHEEL*	1	-
4	545227101	SCREW *SCREW*	1	-
5	545075401	GROMMET *GROMMET REAR WALL*	1	-
6	545071401	BAR *BAR PLATE MOUNTING*	1	-
7	545071301	CAP. SPRING HANDGUARD *CAP. SPRING HANDGUARD*	1	-
8	545071201	SPRING. HANDGUARD POSITION *SPRING. HANDGUARD POSITION*	1	-
11	587026801	CHASSIS *For all EXCEPT 967861912, 967861934, 967861936, 970515014, 970515016, 970515024. CHASSIS ASSEMBLY MACH. BEARING.*	1	-
11	579665204	CHASSIS *For 970515014, 970515016, 970515024, 967861912, 967861936, 967861934*	1	-
13	529310301	BOLT *BOLT M8 X 1.25*	2	-
14	545033501	HOSE *HOSE*	1	-
15	530029868	PLUG *PLUG*	1	-
16	530026119	CHECK VALVE *CHECK VALVE DUCKBILL*	1	-
17	580727101	FUEL HOSE *FUEL HOSE KIT LP100 5.3 O.D.*	1	-
18	530023877	NIPPLE *NIPPLE FITTING - FUEL LINE*	1	-
20	545061901	ISOLATOR *ISOLATOR FILTER HOUSING*	1	-
21	544111203	TANK CAP ASSY *TANK CAP ASSY GREY*	2	-
22	530015906	SCREW *SCREW*	2	-
23	545033801	ISOLATOR *ISOLATOR ASSY FRONT*	1	-

Ref.	Article N.	Description	Qty	Kit
25	545063101	SPRING *For all EXCEPT 967861912, 967861934, 967861936, 970515014, 970515016, 970515024. SPRING REAR ISOLATOR.*	1	-
25	577540601	SPRING *For 967861912, 967861934, 967861936, 970515014, 970515016, 970515024*	1	-
26	577167201	FUEL FILTER *ASSEMBLY FUEL PICKUP PRE FLUSHED*	1	-
27	580727101	FUEL HOSE *FUEL HOSE KIT LP100 5.3 O.D.*	1	-
28	530015814	SCREW *SCREW PT 60/10-14*	1	-
29	530029850	CHAIN CATCHER *CHAIN CATCHER*	1	-
30	530038990	FELLING DOG *FELLING DOG*	1	-
31	530016439	SCREW *SCREW*	2	-
32	530014381	FELLING DOG *FELLING DOG KIT SPIKE ASSEMBLY*	1	-
33	503735801	BUSHING *For 967861912, 967861934, 967861936, 970515014, 970515016, 970515024*	1	-
33	580457501	GROMMET *For all EXCEPT 967861912, 967861934, 967861936, 970515014, 970515016, 970515024. GROMMET FUEL LINE.*	1	-
34	592969801	SPACER PLATE *SPACER PLATE*	1	-
1	545062401	FRONT HANDLE *FRONT HANDLE*	1	-
2	545062202	REAR HANDLE W/OVMLD 240E *For 967861912, 967861934, 967861936, 970515014, 970515016, 970515024*	1	-
2	545062201	REAR HANDLE *For all EXCEPT For 967861912, 967861934, 967861936, 970515014, 970515016, 970515024. REAR HANDLE NO OVERMOLD.*	1	-
3	545062302	REAR HANDLE COVER W/OVMLD 240E *For 967861912, 967861934, 967861936, 970515014, 970515016, 970515024*	1	-
3	545062301	REAR HANDLE COVER 235/235E *For all EXCEPT For 967861912, 967861934, 967861936, 970515014, 970515016, 970515024. REAR HANDLE COVER NO OVERMOLD.*	1	-
4	545062601	LOCKOUT- THROTTLE *LOCKOUT- THROTTLE*	1	-
6	578246701	TRIGGER *TRIGGER ASSEMBLY GRAY*	1	-

Ref.	Article N.	Description	Qty	Kit
7	545033901	ISOLATOR *ISOLATOR ASU FRONT ISOLATOR*	1	-
8	545076301	ISOLATION LIMITER SCREW *ISOLATION LIMITER SCREW M5.28 - 1.8 X 14.75 PL HEX M4 SPECIAL*	1	-
9	530016433	SCREW *SCREW #8-16 X 15.1 PL PAN TRX T25*	3	-
10	530016349	SCREW *SCREW*	2	-
11	530016432	SCREW *SCREW SCREW M5.38-14X22.225MM*	2	-
12	578862201	THROTTLE TRIGGER *KIT TRIGGER & LOCKOUT*	1	-
1	575635502	FLYWHEEL *FLYWHEEL ASSY*	1	-
2	530015127	WASHER *WASHER 5/16 RAMP CONICAL*	1	-
3	530016134	NUT *NUT HEX M8-1 RH GR8*	1	-
4	575803501	MODULE *MODULE*	1	-
5	545121901	SCREW *SCREW M4-0.7X16MM SEMS T20*	2	-
6	545079901	ASSY- WIRE HARNESS *ASSY- WIRE HARNESS*	1	-
1	574266401	NUT *NUT 10MM BRASS*	1	-
2	545076901	EXHAUST PLATE *EXHAUST PLATE*	1	-
3	545167401	SCREEN *SCREEN ARRESTOR GASKET*	1	-
4	530016338	BOLT *BOLT*	2	-
5	586094301	MUFFLER *MUFFLER ASSY*	1	-
6	530054884	MUFFLER GASKET *MUFFLER GASKET*	1	-
7	545066901	MUFFLER BACK PLATE *MUFFLER BACK PLATE*	1	-
8	545008027	KIT *KIT SPARK ARRESTOR*	1	-
9	545180843	MUFFLER *MUFFLER KIT COMPLETE*	1	-
1	530021179	SCREW	1	-

Ref.	Article N.	Description	Qty	Kit
		SCREW		
2	530059677	SLEEVE *SLEEVE*	1	-
3	530021180	SPRING *Spring*	1	-
4	530016080	SCREW *SCREW*	1	-
5	545058201	PULLEY *PULLEY*	1	-
6	530042095	SPRING *SPRING*	1	-
7	530071966	STARTER PULLEY *EPS STARTER KIT (INCL. PULLEY)*	1	-
8	545063801	BAFFLE *BAFFLE*	1	-
9	545063701	FAN HOUSING *FAN HOUSING*	1	-
10	545010010	HANDLE *HANDLE ROPE ASSY*	1	-
11	530016432	SCREW *SCREW SCREW M5.38-14X22.225MM*	4	-
12	545008024	KIT *KIT COMPLETE*	1	-
13	594914101	DECAL *DECAL FAN HOUSING 120 MARK II*	1	-
1	545008028	STARTER PULLEY *KIT STD STARTER*	1	-
2	530015920	SCREW *SCREW*	1	-
3	530016080	SCREW *SCREW*	1	-
4	530057890	STARTER PULLEY *STARTER PULLEY*	1	-
5	545010010	HANDLE *HANDLE ROPE ASSY*	1	-
6	545008013	SPRING CASSETTE ASSY *SPRING*	1	-
7	545063801	BAFFLE *BAFFLE*	1	-
8	545063701	FAN HOUSING *FAN HOUSING*	1	-
9	530016432	SCREW *SCREW SCREW M5.38-14X22.225MM*	4	-

Ref.	Article N.	Description	Qty	Kit
10	545008025	STARTER ASSY *KIT COMPLETE*	1	-
11	594914101	DECAL *DECAL FAN HOUSING 120 MARK II*	1	-
1	587609701	KIT *KIT CARB REPAIR*	1	-
2	573977601	KIT *CARBURETOR GASKET*	1	-
3	545008030	PURGE *PURGE AND LINE ASSEMBLY*	1	-
4	586936202	CARBURETTOR *CARBURETOR*	1	-

CRANKSHAFT

For 967861901, 967861902, 967861903, 967861904, 967861905, 967861906, 967861907

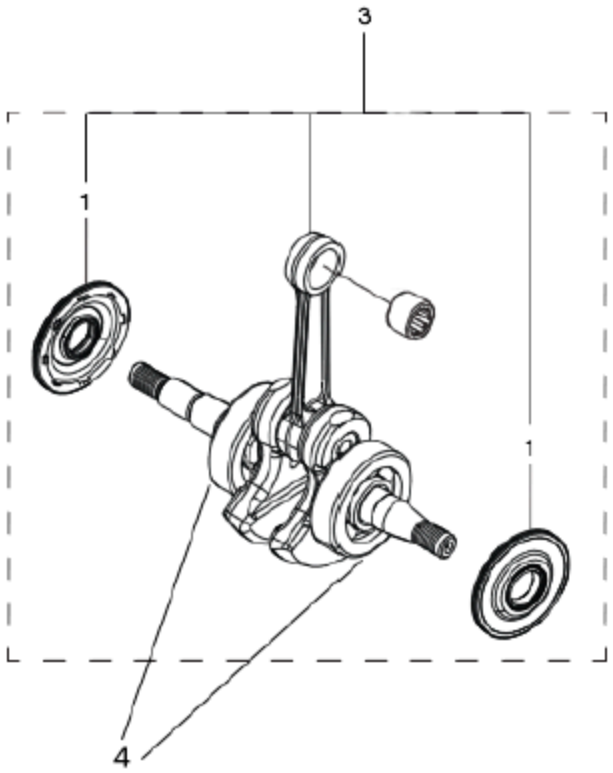

Ref.	Article N.	Description	Qty	Kit
1	587465401	WRENCH *For all EXCEPT For 967861912, 967861934, 967861936. WRENCH CHAINBRAKE RESET.*	1	-
1	587417201	WRENCH *For 967861912, 967861934, 967861936, 970515014, 970515016, 970515024*	1	-
1	586936202	CARBURETTOR *CARBURETOR WITH PURGE BULB*	1	-

Ref.	Article N.	Description	Qty	Kit
2	577815201	THROTTLE *THROTTLE WIRE*	1	-
3	575493401	AIR FILTER *HOUSING*	1	-
4	545061801	AIR FILTER *AIR FILTER*	1	-
5	545151801	PLATE *FILTER PLATE*	1	-
6	530016101	NUT *NUT*	2	-
7	545061901	ISOLATOR *ISOLATOR FILTER HOUSING*	1	-
8	545063401	SWITCH. SPRING *SWITCH SPRING*	1	-
9	545061701	SWITCH LEVER *SWITCH LEVER*	1	-
10	545061601	CHOKE KNOB *CHOKE KNOB*	1	-
11	545061501	CARB ADAPTOR SEAL *CARB ADAPTOR SEAL*	1	-
13	577636501	ADAPTOR *ADAPTOR CARBURETOR*	1	-
15	545033701	STUD-CARBURETOR *STUD-CARBURETOR*	2	-
16	545158301	CARB ADAPTOR SCREW *CARB ADAPTOR SCREW*	4	-
17	530016080	SCREW *SCREW*	1	-
18	545074901	TOP STUD-CARBURETOR *TOP STUD-CARBURETOR*	1	-
19	545081892	GASKET KIT *GASKET KIT*	1	-
20	530016349	SCREW *SCREW*	1	-
2	530057950	PIN. DOWEL *PIN. DOWEL*	1	-
3	578936401	LINK	1	-
4	574780301	SCREW *SCREW M3.63-1.34 X 8MM TORX*	1	-
5	530016415	SPRING COMPRESSION *SPRING COMPRESSION*	1	-
6	530016110	SCREW *SCREW BAR ADJUSTMENT*	1	-

Ref.	Article N.	Description	Qty	Kit
7	530038593	RETAINER *RETAINER BAR ADJUSTMENT*	1	-
8	530015826	PEN *PIN BAR ADJUSTING*	1	-
10	530015913	PEN *PIN BRAKE BAND*	1	-
11	530057923	BRAKE BAND *BRAKE BAND*	1	-
12	525743001	COVER *COVER CHAIN BRAKE*	1	-
13	545227101	SCREW *SCREW*	3	-
14	530015917	NUT *NUT*	2	-
15	545118701	DECAL *DECAL*	1	-
16	525628901	CHAIN BRAKE ASSY *CHAIN BRAKE ASSY*	1	-
1	530014949	CLUTCH *CLUTCH*	1	-
2	530015611	WASHER *WASHER*	1	-
3	530047061	CLUTCH DRUM ASSY *For all EXCEPT 967861902. CLUTCH DRUM ASSY SPUR 3/8 6T.*	1	-
3	530048132	CLUTCH DRUM *For 967861902. CLUTCH DRUM ASSY SPUR .325 7T.*	1	-
4	579621501	WASHER *WASHER THRUST*	1	-
5	525318401	DUST SEAL *DUST SEAL OIL PUMP*	1	-
6	530037820	WORM GEAR *PISTON*	1	-
7	581063901	OIL PUMP ASSY *OIL PUMP ASSY COMPLETE*	1	-
8	545227101	SCREW	1	-
9	545227501	BLOCK *BLOCK OIL*	1	-
10	530049477	ELBOW *ELBOW*	1	-
11	545069401	SEAL *SEAL*	1	-
12	530056533	SCREEN *SCREEN*	1	-

Ref.	Article N.	Description	Qty	Kit
1	576543201	CYLINDER COVER ASSY *KIT CYLINDER SHIELD*	1	-
2	574320601	SCREW *SCREW M5-0.8X25*	3	-
3	545116502	DECAL *DECAL STARTING INSTRUCTIONS*	1	-
4	545165957	SIGN *DECAL WARNING*	1	-
5	579173401	KIT *KIT CHASSIS BRASS INSERTS*	1	-
1	576243901	BEARING	2	-
2	580302601	CRANKSHAFT	1	-
1	581608001	SEAL *SEAL RADIAL BEARING 12 X 36.2 X 3.7*	2	-
3	577830802	KIT *KIT CRANKSHAFT COMPLETE HARDMOUNT BEARING*	1	-
4	585621401	BEARING *BEARING 37MM OD*	2	-
1	577831102	KIT *For all EXCEPT For 967861912, 967861934, 967861936, 970515014, 970515016, 970515024. KIT PISTON AND CYLINDER HARDMOUNT BEARING.*	1	-
1	577831101	KIT *For 967861912, 967861934, 967861936, 970515014, 970515016, 970515024*	1	-
2	545081501	BOLT *BOLT CYLINDER*	4	-
3	574190901	INSERT *INSERT LEFT 38CC CYLINDER*	1	-
4	574190801	INSERT *INSERT RIGHT 38CC CYLINDER*	1	-
5	585040601	PISTON RING *For all EXCEPT For 967861912, 967861934, 967861936, 970515014, 970515016, 970515024. PISTON RING 38CC PISTON RING.*	1	-
5	530012608	PISTON RING *For 967861912, 967861934, 967861936, 970515014, 970515016, 970515024*	1	-
8	530015697	LOCKING RING *LOCKING RING*	2	-
9	503235108	SPARK PLUG *SPARK PLUG M14X1.25 RCJ7Y*	1	-
10	545081894	KIT *For 967861912, 967861934, 967861936, 970515014, 970515016, 970515024*	1	-
10	577831302	KIT *For all EXCEPT For 967861912, 967861934, 967861936, 970515014, 970515016, 970515024. KIT PISTON HARDMOUNT BEARING.*	1	-

Ref.	Article N.	Description	Qty	Kit
1	577611901	HAND GUARD *HAND GUARD ASSY HHS*	1	-
2	545127301	BOSS *BOSS SCREW HANDGUARD*	1	-
3	545061201	REAR WHEEL *REAR WHEEL*	1	-
4	545227101	SCREW *SCREW*	1	-
5	545075401	GROMMET *GROMMET REAR WALL*	1	-
6	545071401	BAR *BAR PLATE MOUNTING*	1	-
7	545071301	CAP. SPRING HANDGUARD *CAP. SPRING HANDGUARD*	1	-
8	545071201	SPRING. HANDGUARD POSITION *SPRING. HANDGUARD POSITION*	1	-
11	587026801	CHASSIS *For all EXCEPT 967861912, 967861934, 967861936, 970515014, 970515016, 970515024. CHASSIS ASSEMBLY MACH. BEARING.*	1	-
11	579665204	CHASSIS *For 970515014, 970515016, 970515024, 967861912, 967861936, 967861934*	1	-
13	529310301	BOLT *BOLT M8 X 1.25*	2	-
14	545033501	HOSE *HOSE*	1	-
15	530029868	PLUG *PLUG*	1	-
16	530026119	CHECK VALVE *CHECK VALVE DUCKBILL*	1	-
17	580727101	FUEL HOSE *FUEL HOSE KIT LP100 5.3 O.D.*	1	-
18	530023877	NIPPLE *NIPPLE FITTING - FUEL LINE*	1	-
20	545061901	ISOLATOR *ISOLATOR FILTER HOUSING*	1	-
21	544111203	TANK CAP ASSY *TANK CAP ASSY GREY*	2	-
22	530015906	SCREW *SCREW*	2	-
23	545033801	ISOLATOR *ISOLATOR ASSY FRONT*	1	-
25	545063101	SPRING	1	-

Ref.	Article N.	Description	Qty	Kit
		For all EXCEPT 967861912, 967861934, 967861936, 970515014, 970515016, 970515024. SPRING REAR ISOLATOR.		
25	577540601	SPRING *For 967861912, 967861934, 967861936, 970515014, 970515016, 970515024*	1	-
26	577167201	FUEL FILTER *ASSEMBLY FUEL PICKUP PRE FLUSHED*	1	-
27	580727101	FUEL HOSE *FUEL HOSE KIT LP100 5.3 O.D.*	1	-
28	530015814	SCREW *SCREW PT 60/10-14*	1	-
29	530029850	CHAIN CATCHER *CHAIN CATCHER*	1	-
30	530038990	FELLING DOG *FELLING DOG*	1	-
31	530016439	SCREW *SCREW*	2	-
32	530014381	FELLING DOG *FELLING DOG KIT SPIKE ASSEMBLY*	1	-
33	503735801	BUSHING *For 967861912, 967861934, 967861936, 970515014, 970515016, 970515024*	1	-
33	580457501	GROMMET *For all EXCEPT 967861912, 967861934, 967861936, 970515014, 970515016, 970515024. GROMMET FUEL LINE.*	1	-
34	592969801	SPACER PLATE *SPACER PLATE*	1	-
1	545062401	FRONT HANDLE *FRONT HANDLE*	1	-
2	545062202	REAR HANDLE W/OVMLD 240E *For 967861912, 967861934, 967861936, 970515014, 970515016, 970515024*	1	-
2	545062201	REAR HANDLE *For all EXCEPT For 967861912, 967861934, 967861936, 970515014, 970515016, 970515024. REAR HANDLE NO OVERMOLD.*	1	-
3	545062302	REAR HANDLE COVER W/OVMLD 240E *For 967861912, 967861934, 967861936, 970515014, 970515016, 970515024*	1	-
3	545062301	REAR HANDLE COVER 235/235E *For all EXCEPT For 967861912, 967861934, 967861936, 970515014, 970515016, 970515024. REAR HANDLE COVER NO OVERMOLD.*	1	-
4	545062601	LOCKOUT- THROTTLE *LOCKOUT- THROTTLE*	1	-
6	578246701	TRIGGER *TRIGGER ASSEMBLY GRAY*	1	-
7	545033901	ISOLATOR *ISOLATOR ASU FRONT ISOLATOR*	1	-

Ref.	Article N.	Description	Qty	Kit
8	545076301	ISOLATION LIMITER SCREW *ISOLATION LIMITER SCREW M5.28 - 1.8 X 14.75 PL HEX M4 SPECIAL*	1	-
9	530016433	SCREW *SCREW #8-16 X 15.1 PL PAN TRX T25*	3	-
10	530016349	SCREW *SCREW*	2	-
11	530016432	SCREW *SCREW SCREW M5.38-14X22.225MM*	2	-
12	578862201	THROTTLE TRIGGER *KIT TRIGGER & LOCKOUT*	1	-
1	575635502	FLYWHEEL *FLYWHEEL ASSY*	1	-
2	530015127	WASHER *WASHER 5/16 RAMP CONICAL*	1	-
3	530016134	NUT *NUT HEX M8-1 RH GR8*	1	-
4	575803501	MODULE *MODULE*	1	-
5	545121901	SCREW *SCREW M4-0.7X16MM SEMS T20*	2	-
6	545079901	ASSY- WIRE HARNESS *ASSY- WIRE HARNESS*	1	-
1	574266401	NUT *NUT 10MM BRASS*	1	-
2	545076901	EXHAUST PLATE *EXHAUST PLATE*	1	-
3	545167401	SCREEN *SCREEN ARRESTOR GASKET*	1	-
4	530016338	BOLT *BOLT*	2	-
5	586094301	MUFFLER *MUFFLER ASSY*	1	-
6	530054884	MUFFLER GASKET *MUFFLER GASKET*	1	-
7	545066901	MUFFLER BACK PLATE *MUFFLER BACK PLATE*	1	-
8	545008027	KIT *KIT SPARK ARRESTOR*	1	-
9	545180843	MUFFLER *MUFFLER KIT COMPLETE*	1	-
1	530021179	SCREW *SCREW*	1	-
2	530059677	SLEEVE	1	-

Ref.	Article N.	Description	Qty	Kit
		SLEEVE		
3	530021180	SPRING *Spring*	1	-
4	530016080	SCREW *SCREW*	1	-
5	545058201	PULLEY *PULLEY*	1	-
6	530042095	SPRING *SPRING*	1	-
7	530071966	STARTER PULLEY *EPS STARTER KIT (INCL. PULLEY)*	1	-
8	545063801	BAFFLE *BAFFLE*	1	-
9	545063701	FAN HOUSING *FAN HOUSING*	1	-
10	545010010	HANDLE *HANDLE ROPE ASSY*	1	-
11	530016432	SCREW *SCREW SCREW M5.38-14X22.225MM*	4	-
12	545008024	KIT *KIT COMPLETE*	1	-
13	594914101	DECAL *DECAL FAN HOUSING 120 MARK II*	1	-
1	545008028	STARTER PULLEY *KIT STD STARTER*	1	-
2	530015920	SCREW *SCREW*	1	-
3	530016080	SCREW *SCREW*	1	-
4	530057890	STARTER PULLEY *STARTER PULLEY*	1	-
5	545010010	HANDLE *HANDLE ROPE ASSY*	1	-
6	545008013	SPRING CASSETTE ASSY *SPRING*	1	-
7	545063801	BAFFLE *BAFFLE*	1	-
8	545063701	FAN HOUSING *FAN HOUSING*	1	-
9	530016432	SCREW *SCREW SCREW M5.38-14X22.225MM*	4	-
10	545008025	STARTER ASSY *KIT COMPLETE*	1	-

Ref.	Article N.	Description	Qty	Kit
11	594914101	DECAL *DECAL FAN HOUSING 120 MARK II*	1	-
1	587609701	KIT *KIT CARB REPAIR*	1	-
2	573977601	KIT *CARBURETOR GASKET*	1	-
3	545008030	PURGE *PURGE AND LINE ASSEMBLY*	1	-
4	586936202	CARBURETTOR *CARBURETOR*	1	-

CYLINDER PISTON

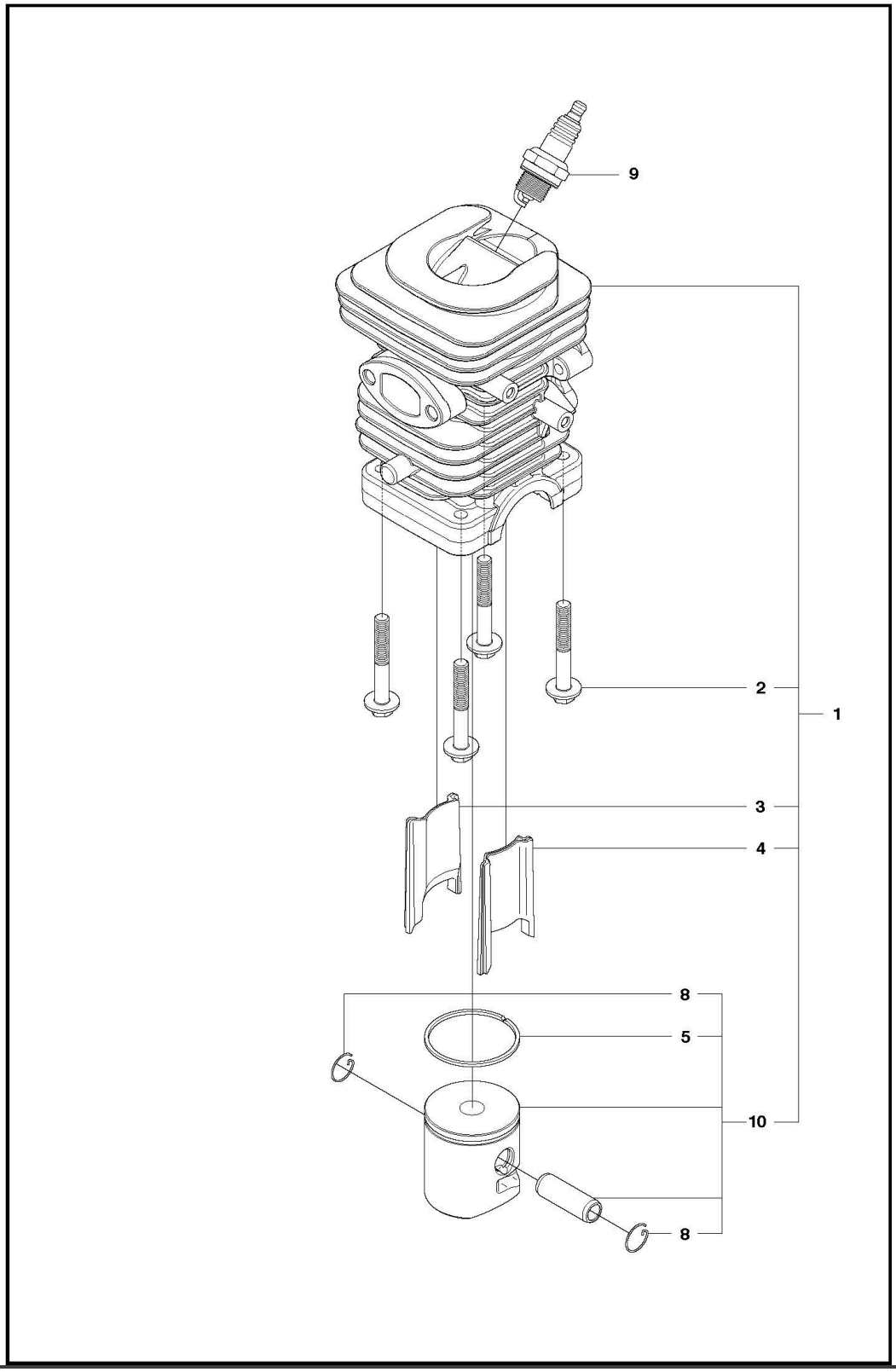

Ref.	Article N.	Description	Qty	Kit
1	587465401	WRENCH *For all EXCEPT For 967861912, 967861934, 967861936. WRENCH CHAINBRAKE RESET.*	1	-
1	587417201	WRENCH *For 967861912, 967861934, 967861936, 970515014, 970515016, 970515024*	1	-
1	586936202	CARBURETTOR	1	-

Ref.	Article N.	Description	Qty	Kit
		CARBURETOR WITH PURGE BULB		
2	577815201	THROTTLE *THROTTLE WIRE*	1	-
3	575493401	AIR FILTER *HOUSING*	1	-
4	545061801	AIR FILTER *AIR FILTER*	1	-
5	545151801	PLATE *FILTER PLATE*	1	-
6	530016101	NUT *NUT*	2	-
7	545061901	ISOLATOR *ISOLATOR FILTER HOUSING*	1	-
8	545063401	SWITCH. SPRING *SWITCH SPRING*	1	-
9	545061701	SWITCH LEVER *SWITCH LEVER*	1	-
10	545061601	CHOKE KNOB *CHOKE KNOB*	1	-
11	545061501	CARB ADAPTOR SEAL *CARB ADAPTOR SEAL*	1	-
13	577636501	ADAPTOR *ADAPTOR CARBURETOR*	1	-
15	545033701	STUD-CARBURETOR *STUD-CARBURETOR*	2	-
16	545158301	CARB ADAPTOR SCREW *CARB ADAPTOR SCREW*	4	-
17	530016080	SCREW *SCREW*	1	-
18	545074901	TOP STUD-CARBURETOR *TOP STUD-CARBURETOR*	1	-
19	545081892	GASKET KIT *GASKET KIT*	1	-
20	530016349	SCREW *SCREW*	1	-
2	530057950	PIN. DOWEL *PIN. DOWEL*	1	-
3	578936401	LINK	1	-
4	574780301	SCREW *SCREW M3.63-1.34 X 8MM TORX*	1	-
5	530016415	SPRING COMPRESSION *SPRING COMPRESSION*	1	-
6	530016110	SCREW	1	-

Ref.	Article N.	Description	Qty	Kit
		SCREW BAR ADJUSTMENT		
7	530038593	RETAINER *RETAINER BAR ADJUSTMENT*	1	-
8	530015826	PEN *PIN BAR ADJUSTING*	1	-
10	530015913	PEN *PIN BRAKE BAND*	1	-
11	530057923	BRAKE BAND *BRAKE BAND*	1	-
12	525743001	COVER *COVER CHAIN BRAKE*	1	-
13	545227101	SCREW *SCREW*	3	-
14	530015917	NUT *NUT*	2	-
15	545118701	DECAL *DECAL*	1	-
16	525628901	CHAIN BRAKE ASSY *CHAIN BRAKE ASSY*	1	-
1	530014949	CLUTCH *CLUTCH*	1	-
2	530015611	WASHER *WASHER*	1	-
3	530047061	CLUTCH DRUM ASSY *For all EXCEPT 967861902. CLUTCH DRUM ASSY SPUR 3/8 6T.*	1	-
3	530048132	CLUTCH DRUM *For 967861902. CLUTCH DRUM ASSY SPUR .325 7T.*	1	-
4	579621501	WASHER *WASHER THRUST*	1	-
5	525318401	DUST SEAL *DUST SEAL OIL PUMP*	1	-
6	530037820	WORM GEAR *PISTON*	1	-
7	581063901	OIL PUMP ASSY *OIL PUMP ASSY COMPLETE*	1	-
8	545227101	SCREW	1	-
9	545227501	BLOCK *BLOCK OIL*	1	-
10	530049477	ELBOW *ELBOW*	1	-
11	545069401	SEAL *SEAL*	1	-
12	530056533	SCREEN	1	-

Ref.	Article N.	Description	Qty	Kit
		SCREEN		
1	576543201	CYLINDER COVER ASSY *KIT CYLINDER SHIELD*	1	-
2	574320601	SCREW *SCREW M5-0.8X25*	3	-
3	545116502	DECAL *DECAL STARTING INSTRUCTIONS*	1	-
4	545165957	SIGN *DECAL WARNING*	1	-
5	579173401	KIT *KIT CHASSIS BRASS INSERTS*	1	-
1	576243901	BEARING	2	-
2	580302601	CRANKSHAFT	1	-
1	581608001	SEAL *SEAL RADIAL BEARING 12 X 36.2 X 3.7*	2	-
3	577830802	KIT *KIT CRANKSHAFT COMPLETE HARDMOUNT BEARING*	1	-
4	585621401	BEARING *BEARING 37MM OD*	2	-
1	577831102	KIT *For all EXCEPT For 967861912, 967861934, 967861936, 970515014, 970515016, 970515024. KIT PISTON AND CYLINDER HARDMOUNT BEARING.*	1	-
1	577831101	KIT *For 967861912, 967861934, 967861936, 970515014, 970515016, 970515024*	1	-
2	545081501	BOLT *BOLT CYLINDER*	4	-
3	574190901	INSERT *INSERT LEFT 38CC CYLINDER*	1	-
4	574190801	INSERT *INSERT RIGHT 38CC CYLINDER*	1	-
5	585040601	PISTON RING *For all EXCEPT For 967861912, 967861934, 967861936, 970515014, 970515016, 970515024. PISTON RING 38CC PISTON RING.*	1	-
5	530012608	PISTON RING *For 967861912, 967861934, 967861936, 970515014, 970515016, 970515024*	1	-
8	530015697	LOCKING RING *LOCKING RING*	2	-
9	503235108	SPARK PLUG *SPARK PLUG M14X1.25 RCJ7Y*	1	-
10	545081894	KIT *For 967861912, 967861934, 967861936, 970515014, 970515016, 970515024*	1	-
10	577831302	KIT	1	-

Ref.	Article N.	Description	Qty	Kit
		For all EXCEPT For 967861912, 967861934, 967861936, 970515014, 970515016, 970515024. KIT PISTON HARDMOUNT BEARING.		
1	577611901	HAND GUARD *HAND GUARD ASSY HHS*	1	-
2	545127301	BOSS *BOSS SCREW HANDGUARD*	1	-
3	545061201	REAR WHEEL *REAR WHEEL*	1	-
4	545227101	SCREW *SCREW*	1	-
5	545075401	GROMMET *GROMMET REAR WALL*	1	-
6	545071401	BAR *BAR PLATE MOUNTING*	1	-
7	545071301	CAP. SPRING HANDGUARD *CAP. SPRING HANDGUARD*	1	-
8	545071201	SPRING. HANDGUARD POSITION *SPRING. HANDGUARD POSITION*	1	-
11	587026801	CHASSIS *For all EXCEPT 967861912, 967861934, 967861936, 970515014, 970515016, 970515024. CHASSIS ASSEMBLY MACH. BEARING.*	1	-
11	579665204	CHASSIS *For 970515014, 970515016, 970515024, 967861912, 967861936, 967861934*	1	-
13	529310301	BOLT *BOLT M8 X 1.25*	2	-
14	545033501	HOSE *HOSE*	1	-
15	530029868	PLUG *PLUG*	1	-
16	530026119	CHECK VALVE *CHECK VALVE DUCKBILL*	1	-
17	580727101	FUEL HOSE *FUEL HOSE KIT LP100 5.3 O.D.*	1	-
18	530023877	NIPPLE *NIPPLE FITTING - FUEL LINE*	1	-
20	545061901	ISOLATOR *ISOLATOR FILTER HOUSING*	1	-
21	544111203	TANK CAP ASSY *TANK CAP ASSY GREY*	2	-
22	530015906	SCREW *SCREW*	2	-
23	545033801	ISOLATOR *ISOLATOR ASSY FRONT*	1	-

Ref.	Article N.	Description	Qty	Kit
25	545063101	SPRING *For all EXCEPT 967861912, 967861934, 967861936, 970515014, 970515016, 970515024. SPRING REAR ISOLATOR.*	1	-
25	577540601	SPRING *For 967861912, 967861934, 967861936, 970515014, 970515016, 970515024*	1	-
26	577167201	FUEL FILTER *ASSEMBLY FUEL PICKUP PRE FLUSHED*	1	-
27	580727101	FUEL HOSE *FUEL HOSE KIT LP100 5.3 O.D.*	1	-
28	530015814	SCREW *SCREW PT 60/10-14*	1	-
29	530029850	CHAIN CATCHER *CHAIN CATCHER*	1	-
30	530038990	FELLING DOG *FELLING DOG*	1	-
31	530016439	SCREW *SCREW*	2	-
32	530014381	FELLING DOG *FELLING DOG KIT SPIKE ASSEMBLY*	1	-
33	503735801	BUSHING *For 967861912, 967861934, 967861936, 970515014, 970515016, 970515024*	1	-
33	580457501	GROMMET *For all EXCEPT 967861912, 967861934, 967861936, 970515014, 970515016, 970515024. GROMMET FUEL LINE.*	1	-
34	592969801	SPACER PLATE *SPACER PLATE*	1	-
1	545062401	FRONT HANDLE *FRONT HANDLE*	1	-
2	545062202	REAR HANDLE W/OVMLD 240E *For 967861912, 967861934, 967861936, 970515014, 970515016, 970515024*	1	-
2	545062201	REAR HANDLE *For all EXCEPT For 967861912, 967861934, 967861936, 970515014, 970515016, 970515024. REAR HANDLE NO OVERMOLD.*	1	-
3	545062302	REAR HANDLE COVER W/OVMLD 240E *For 967861912, 967861934, 967861936, 970515014, 970515016, 970515024*	1	-
3	545062301	REAR HANDLE COVER 235/235E *For all EXCEPT For 967861912, 967861934, 967861936, 970515014, 970515016, 970515024. REAR HANDLE COVER NO OVERMOLD.*	1	-
4	545062601	LOCKOUT- THROTTLE *LOCKOUT- THROTTLE*	1	-
6	578246701	TRIGGER *TRIGGER ASSEMBLY GRAY*	1	-

Ref.	Article N.	Description	Qty	Kit
7	545033901	ISOLATOR *ISOLATOR ASU FRONT ISOLATOR*	1	-
8	545076301	ISOLATION LIMITER SCREW *ISOLATION LIMITER SCREW M5.28 - 1.8 X 14.75 PL HEX M4 SPECIAL*	1	-
9	530016433	SCREW *SCREW #8-16 X 15.1 PL PAN TRX T25*	3	-
10	530016349	SCREW *SCREW*	2	-
11	530016432	SCREW *SCREW SCREW M5.38-14X22.225MM*	2	-
12	578862201	THROTTLE TRIGGER *KIT TRIGGER & LOCKOUT*	1	-
1	575635502	FLYWHEEL *FLYWHEEL ASSY*	1	-
2	530015127	WASHER *WASHER 5/16 RAMP CONICAL*	1	-
3	530016134	NUT *NUT HEX M8-1 RH GR8*	1	-
4	575803501	MODULE *MODULE*	1	-
5	545121901	SCREW *SCREW M4-0.7X16MM SEMS T20*	2	-
6	545079901	ASSY- WIRE HARNESS *ASSY- WIRE HARNESS*	1	-
1	574266401	NUT *NUT 10MM BRASS*	1	-
2	545076901	EXHAUST PLATE *EXHAUST PLATE*	1	-
3	545167401	SCREEN *SCREEN ARRESTOR GASKET*	1	-
4	530016338	BOLT *BOLT*	2	-
5	586094301	MUFFLER *MUFFLER ASSY*	1	-
6	530054884	MUFFLER GASKET *MUFFLER GASKET*	1	-
7	545066901	MUFFLER BACK PLATE *MUFFLER BACK PLATE*	1	-
8	545008027	KIT *KIT SPARK ARRESTOR*	1	-
9	545180843	MUFFLER *MUFFLER KIT COMPLETE*	1	-
1	530021179	SCREW	1	-

Ref.	Article N.	Description	Qty	Kit
		SCREW		
2	530059677	SLEEVE *SLEEVE*	1	-
3	530021180	SPRING *Spring*	1	-
4	530016080	SCREW *SCREW*	1	-
5	545058201	PULLEY *PULLEY*	1	-
6	530042095	SPRING *SPRING*	1	-
7	530071966	STARTER PULLEY *EPS STARTER KIT (INCL. PULLEY)*	1	-
8	545063801	BAFFLE *BAFFLE*	1	-
9	545063701	FAN HOUSING *FAN HOUSING*	1	-
10	545010010	HANDLE *HANDLE ROPE ASSY*	1	-
11	530016432	SCREW *SCREW SCREW M5.38-14X22.225MM*	4	-
12	545008024	KIT *KIT COMPLETE*	1	-
13	594914101	DECAL *DECAL FAN HOUSING 120 MARK II*	1	-
1	545008028	STARTER PULLEY *KIT STD STARTER*	1	-
2	530015920	SCREW *SCREW*	1	-
3	530016080	SCREW *SCREW*	1	-
4	530057890	STARTER PULLEY *STARTER PULLEY*	1	-
5	545010010	HANDLE *HANDLE ROPE ASSY*	1	-
6	545008013	SPRING CASSETTE ASSY *SPRING*	1	-
7	545063801	BAFFLE *BAFFLE*	1	-
8	545063701	FAN HOUSING *FAN HOUSING*	1	-
9	530016432	SCREW *SCREW SCREW M5.38-14X22.225MM*	4	-

Ref.	Article N.	Description	Qty	Kit
10	545008025	STARTER ASSY *KIT COMPLETE*	1	-
11	594914101	DECAL *DECAL FAN HOUSING 120 MARK II*	1	-
1	587609701	KIT *KIT CARB REPAIR*	1	-
2	573977601	KIT *CARBURETOR GASKET*	1	-
3	545008030	PURGE *PURGE AND LINE ASSEMBLY*	1	-
4	586936202	CARBURETTOR *CARBURETOR*	1	-

FUEL TANK AND HANDLE

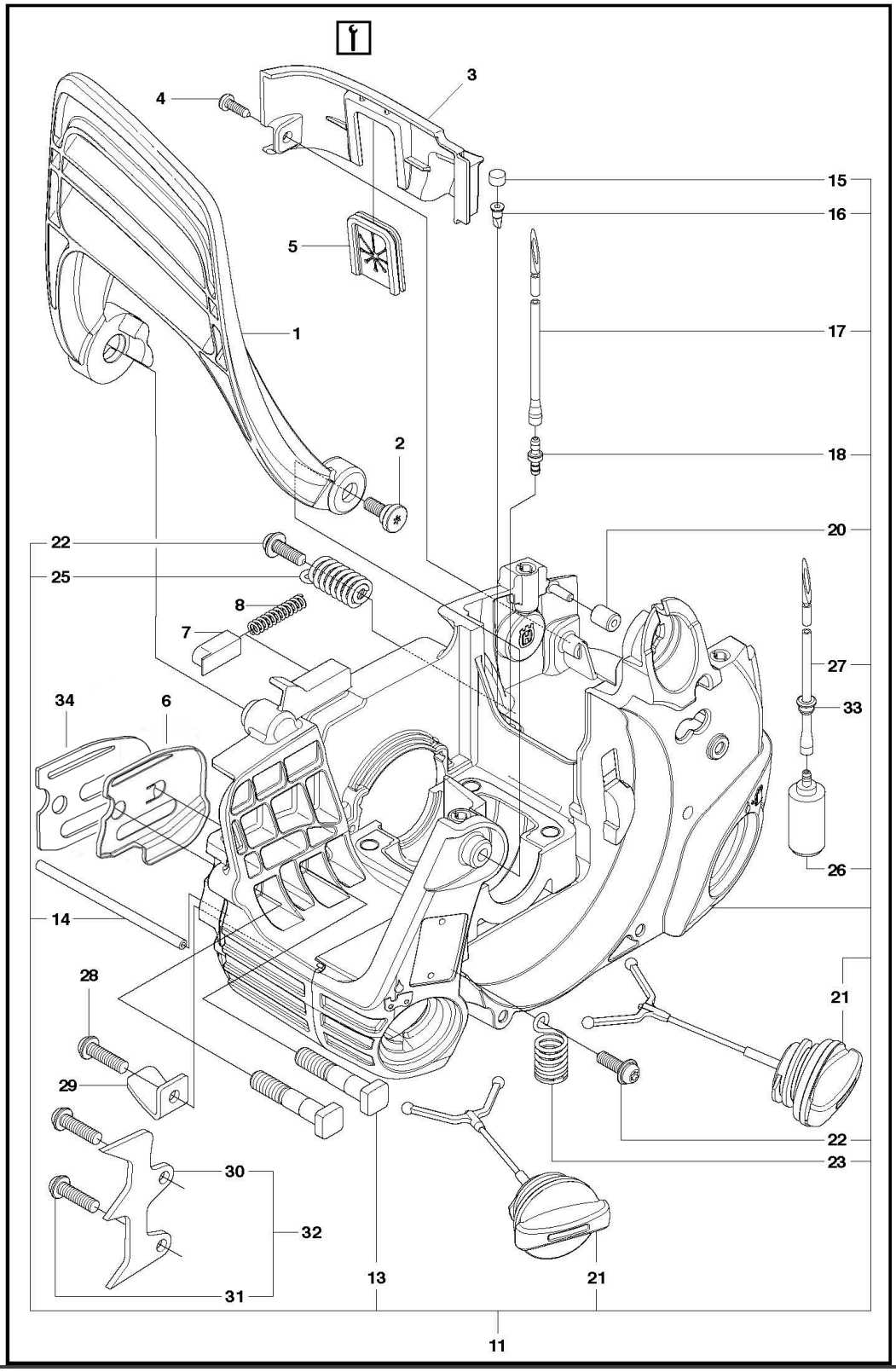

Ref.	Article N.	Description	Qty	Kit
1	587465401	WRENCH *For all EXCEPT For 967861912, 967861934, 967861936. WRENCH CHAINBRAKE RESET.*	1	-
1	587417201	WRENCH *For 967861912, 967861934, 967861936, 970515014, 970515016, 970515024*	1	-
1	586936202	CARBURETTOR	1	-

Ref.	Article N.	Description	Qty	Kit
		CARBURETOR WITH PURGE BULB		
2	577815201	THROTTLE *THROTTLE WIRE*	1	-
3	575493401	AIR FILTER *HOUSING*	1	-
4	545061801	AIR FILTER *AIR FILTER*	1	-
5	545151801	PLATE *FILTER PLATE*	1	-
6	530016101	NUT *NUT*	2	-
7	545061901	ISOLATOR *ISOLATOR FILTER HOUSING*	1	-
8	545063401	SWITCH. SPRING *SWITCH SPRING*	1	-
9	545061701	SWITCH LEVER *SWITCH LEVER*	1	-
10	545061601	CHOKE KNOB *CHOKE KNOB*	1	-
11	545061501	CARB ADAPTOR SEAL *CARB ADAPTOR SEAL*	1	-
13	577636501	ADAPTOR *ADAPTOR CARBURETOR*	1	-
15	545033701	STUD-CARBURETOR *STUD-CARBURETOR*	2	-
16	545158301	CARB ADAPTOR SCREW *CARB ADAPTOR SCREW*	4	-
17	530016080	SCREW *SCREW*	1	-
18	545074901	TOP STUD-CARBURETOR *TOP STUD-CARBURETOR*	1	-
19	545081892	GASKET KIT *GASKET KIT*	1	-
20	530016349	SCREW *SCREW*	1	-
2	530057950	PIN. DOWEL *PIN. DOWEL*	1	-
3	578936401	LINK	1	-
4	574780301	SCREW *SCREW M3.63-1.34 X 8MM TORX*	1	-
5	530016415	SPRING COMPRESSION *SPRING COMPRESSION*	1	-
6	530016110	SCREW	1	-

Ref.	Article N.	Description	Qty	Kit
		SCREW BAR ADJUSTMENT		
7	530038593	RETAINER *RETAINER BAR ADJUSTMENT*	1	-
8	530015826	PEN *PIN BAR ADJUSTING*	1	-
10	530015913	PEN *PIN BRAKE BAND*	1	-
11	530057923	BRAKE BAND *BRAKE BAND*	1	-
12	525743001	COVER *COVER CHAIN BRAKE*	1	-
13	545227101	SCREW *SCREW*	3	-
14	530015917	NUT *NUT*	2	-
15	545118701	DECAL *DECAL*	1	-
16	525628901	CHAIN BRAKE ASSY *CHAIN BRAKE ASSY*	1	-
1	530014949	CLUTCH *CLUTCH*	1	-
2	530015611	WASHER *WASHER*	1	-
3	530047061	CLUTCH DRUM ASSY *For all EXCEPT 967861902. CLUTCH DRUM ASSY SPUR 3/8 6T.*	1	-
3	530048132	CLUTCH DRUM *For 967861902. CLUTCH DRUM ASSY SPUR .325 7T.*	1	-
4	579621501	WASHER *WASHER THRUST*	1	-
5	525318401	DUST SEAL *DUST SEAL OIL PUMP*	1	-
6	530037820	WORM GEAR *PISTON*	1	-
7	581063901	OIL PUMP ASSY *OIL PUMP ASSY COMPLETE*	1	-
8	545227101	SCREW	1	-
9	545227501	BLOCK *BLOCK OIL*	1	-
10	530049477	ELBOW *ELBOW*	1	-
11	545069401	SEAL *SEAL*	1	-
12	530056533	SCREEN	1	-

Ref.	Article N.	Description	Qty	Kit
		SCREEN		
1	576543201	CYLINDER COVER ASSY *KIT CYLINDER SHIELD*	1	-
2	574320601	SCREW *SCREW M5-0.8X25*	3	-
3	545116502	DECAL *DECAL STARTING INSTRUCTIONS*	1	-
4	545165957	SIGN *DECAL WARNING*	1	-
5	579173401	KIT *KIT CHASSIS BRASS INSERTS*	1	-
1	576243901	BEARING	2	-
2	580302601	CRANKSHAFT	1	-
1	581608001	SEAL *SEAL RADIAL BEARING 12 X 36.2 X 3.7*	2	-
3	577830802	KIT *KIT CRANKSHAFT COMPLETE HARDMOUNT BEARING*	1	-
4	585621401	BEARING *BEARING 37MM OD*	2	-
1	577831102	KIT *For all EXCEPT For 967861912, 967861934, 967861936, 970515014, 970515016, 970515024. KIT PISTON AND CYLINDER HARDMOUNT BEARING.*	1	-
1	577831101	KIT *For 967861912, 967861934, 967861936, 970515014, 970515016, 970515024*	1	-
2	545081501	BOLT *BOLT CYLINDER*	4	-
3	574190901	INSERT *INSERT LEFT 38CC CYLINDER*	1	-
4	574190801	INSERT *INSERT RIGHT 38CC CYLINDER*	1	-
5	585040601	PISTON RING *For all EXCEPT For 967861912, 967861934, 967861936, 970515014, 970515016, 970515024. PISTON RING 38CC PISTON RING.*	1	-
5	530012608	PISTON RING *For 967861912, 967861934, 967861936, 970515014, 970515016, 970515024*	1	-
8	530015697	LOCKING RING *LOCKING RING*	2	-
9	503235108	SPARK PLUG *SPARK PLUG M14X1.25 RCJ7Y*	1	-
10	545081894	KIT *For 967861912, 967861934, 967861936, 970515014, 970515016, 970515024*	1	-
10	577831302	KIT	1	-

Ref.	Article N.	Description	Qty	Kit
		For all EXCEPT For 967861912, 967861934, 967861936, 970515014, 970515016, 970515024. KIT PISTON HARDMOUNT BEARING.		
1	577611901	HAND GUARD *HAND GUARD ASSY HHS*	1	-
2	545127301	BOSS *BOSS SCREW HANDGUARD*	1	-
3	545061201	REAR WHEEL *REAR WHEEL*	1	-
4	545227101	SCREW *SCREW*	1	-
5	545075401	GROMMET *GROMMET REAR WALL*	1	-
6	545071401	BAR *BAR PLATE MOUNTING*	1	-
7	545071301	CAP. SPRING HANDGUARD *CAP. SPRING HANDGUARD*	1	-
8	545071201	SPRING. HANDGUARD POSITION *SPRING. HANDGUARD POSITION*	1	-
11	587026801	CHASSIS *For all EXCEPT 967861912, 967861934, 967861936, 970515014, 970515016, 970515024. CHASSIS ASSEMBLY MACH. BEARING.*	1	-
11	579665204	CHASSIS *For 970515014, 970515016, 970515024, 967861912, 967861936, 967861934*	1	-
13	529310301	BOLT *BOLT M8 X 1.25*	2	-
14	545033501	HOSE *HOSE*	1	-
15	530029868	PLUG *PLUG*	1	-
16	530026119	CHECK VALVE *CHECK VALVE DUCKBILL*	1	-
17	580727101	FUEL HOSE *FUEL HOSE KIT LP100 5.3 O.D.*	1	-
18	530023877	NIPPLE *NIPPLE FITTING - FUEL LINE*	1	-
20	545061901	ISOLATOR *ISOLATOR FILTER HOUSING*	1	-
21	544111203	TANK CAP ASSY *TANK CAP ASSY GREY*	2	-
22	530015906	SCREW *SCREW*	2	-
23	545033801	ISOLATOR *ISOLATOR ASSY FRONT*	1	-

Ref.	Article N.	Description	Qty	Kit
25	545063101	SPRING *For all EXCEPT 967861912, 967861934, 967861936, 970515014, 970515016, 970515024. SPRING REAR ISOLATOR.*	1	-
25	577540601	SPRING *For 967861912, 967861934, 967861936, 970515014, 970515016, 970515024*	1	-
26	577167201	FUEL FILTER *ASSEMBLY FUEL PICKUP PRE FLUSHED*	1	-
27	580727101	FUEL HOSE *FUEL HOSE KIT LP100 5.3 O.D.*	1	-
28	530015814	SCREW *SCREW PT 60/10-14*	1	-
29	530029850	CHAIN CATCHER *CHAIN CATCHER*	1	-
30	530038990	FELLING DOG *FELLING DOG*	1	-
31	530016439	SCREW *SCREW*	2	-
32	530014381	FELLING DOG *FELLING DOG KIT SPIKE ASSEMBLY*	1	-
33	503735801	BUSHING *For 967861912, 967861934, 967861936, 970515014, 970515016, 970515024*	1	-
33	580457501	GROMMET *For all EXCEPT 967861912, 967861934, 967861936, 970515014, 970515016, 970515024. GROMMET FUEL LINE.*	1	-
34	592969801	SPACER PLATE *SPACER PLATE*	1	-
1	545062401	FRONT HANDLE *FRONT HANDLE*	1	-
2	545062202	REAR HANDLE W/OVMLD 240E *For 967861912, 967861934, 967861936, 970515014, 970515016, 970515024*	1	-
2	545062201	REAR HANDLE *For all EXCEPT For 967861912, 967861934, 967861936, 970515014, 970515016, 970515024. REAR HANDLE NO OVERMOLD.*	1	-
3	545062302	REAR HANDLE COVER W/OVMLD 240E *For 967861912, 967861934, 967861936, 970515014, 970515016, 970515024*	1	-
3	545062301	REAR HANDLE COVER 235/235E *For all EXCEPT For 967861912, 967861934, 967861936, 970515014, 970515016, 970515024. REAR HANDLE COVER NO OVERMOLD.*	1	-
4	545062601	LOCKOUT- THROTTLE *LOCKOUT- THROTTLE*	1	-
6	578246701	TRIGGER *TRIGGER ASSEMBLY GRAY*	1	-

Ref.	Article N.	Description	Qty	Kit
7	545033901	ISOLATOR *ISOLATOR ASU FRONT ISOLATOR*	1	-
8	545076301	ISOLATION LIMITER SCREW *ISOLATION LIMITER SCREW M5.28 - 1.8 X 14.75 PL HEX M4 SPECIAL*	1	-
9	530016433	SCREW *SCREW #8-16 X 15.1 PL PAN TRX T25*	3	-
10	530016349	SCREW *SCREW*	2	-
11	530016432	SCREW *SCREW SCREW M5.38-14X22.225MM*	2	-
12	578862201	THROTTLE TRIGGER *KIT TRIGGER & LOCKOUT*	1	-
1	575635502	FLYWHEEL *FLYWHEEL ASSY*	1	-
2	530015127	WASHER *WASHER 5/16 RAMP CONICAL*	1	-
3	530016134	NUT *NUT HEX M8-1 RH GR8*	1	-
4	575803501	MODULE *MODULE*	1	-
5	545121901	SCREW *SCREW M4-0.7X16MM SEMS T20*	2	-
6	545079901	ASSY- WIRE HARNESS *ASSY- WIRE HARNESS*	1	-
1	574266401	NUT *NUT 10MM BRASS*	1	-
2	545076901	EXHAUST PLATE *EXHAUST PLATE*	1	-
3	545167401	SCREEN *SCREEN ARRESTOR GASKET*	1	-
4	530016338	BOLT *BOLT*	2	-
5	586094301	MUFFLER *MUFFLER ASSY*	1	-
6	530054884	MUFFLER GASKET *MUFFLER GASKET*	1	-
7	545066901	MUFFLER BACK PLATE *MUFFLER BACK PLATE*	1	-
8	545008027	KIT *KIT SPARK ARRESTOR*	1	-
9	545180843	MUFFLER *MUFFLER KIT COMPLETE*	1	-
1	530021179	SCREW	1	-

Ref.	Article N.	Description	Qty	Kit
		SCREW		
2	530059677	SLEEVE *SLEEVE*	1	-
3	530021180	SPRING *Spring*	1	-
4	530016080	SCREW *SCREW*	1	-
5	545058201	PULLEY *PULLEY*	1	-
6	530042095	SPRING *SPRING*	1	-
7	530071966	STARTER PULLEY *EPS STARTER KIT (INCL. PULLEY)*	1	-
8	545063801	BAFFLE *BAFFLE*	1	-
9	545063701	FAN HOUSING *FAN HOUSING*	1	-
10	545010010	HANDLE *HANDLE ROPE ASSY*	1	-
11	530016432	SCREW *SCREW SCREW M5.38-14X22.225MM*	4	-
12	545008024	KIT *KIT COMPLETE*	1	-
13	594914101	DECAL *DECAL FAN HOUSING 120 MARK II*	1	-
1	545008028	STARTER PULLEY *KIT STD STARTER*	1	-
2	530015920	SCREW *SCREW*	1	-
3	530016080	SCREW *SCREW*	1	-
4	530057890	STARTER PULLEY *STARTER PULLEY*	1	-
5	545010010	HANDLE *HANDLE ROPE ASSY*	1	-
6	545008013	SPRING CASSETTE ASSY *SPRING*	1	-
7	545063801	BAFFLE *BAFFLE*	1	-
8	545063701	FAN HOUSING *FAN HOUSING*	1	-
9	530016432	SCREW *SCREW SCREW M5.38-14X22.225MM*	4	-

Ref.	Article N.	Description	Qty	Kit
10	545008025	STARTER ASSY *KIT COMPLETE*	1	-
11	594914101	DECAL *DECAL FAN HOUSING 120 MARK II*	1	-
1	587609701	KIT *KIT CARB REPAIR*	1	-
2	573977601	KIT *CARBURETOR GASKET*	1	-
3	545008030	PURGE *PURGE AND LINE ASSEMBLY*	1	-
4	586936202	CARBURETTOR *CARBURETOR*	1	-

HANDLE AND CONTROLS

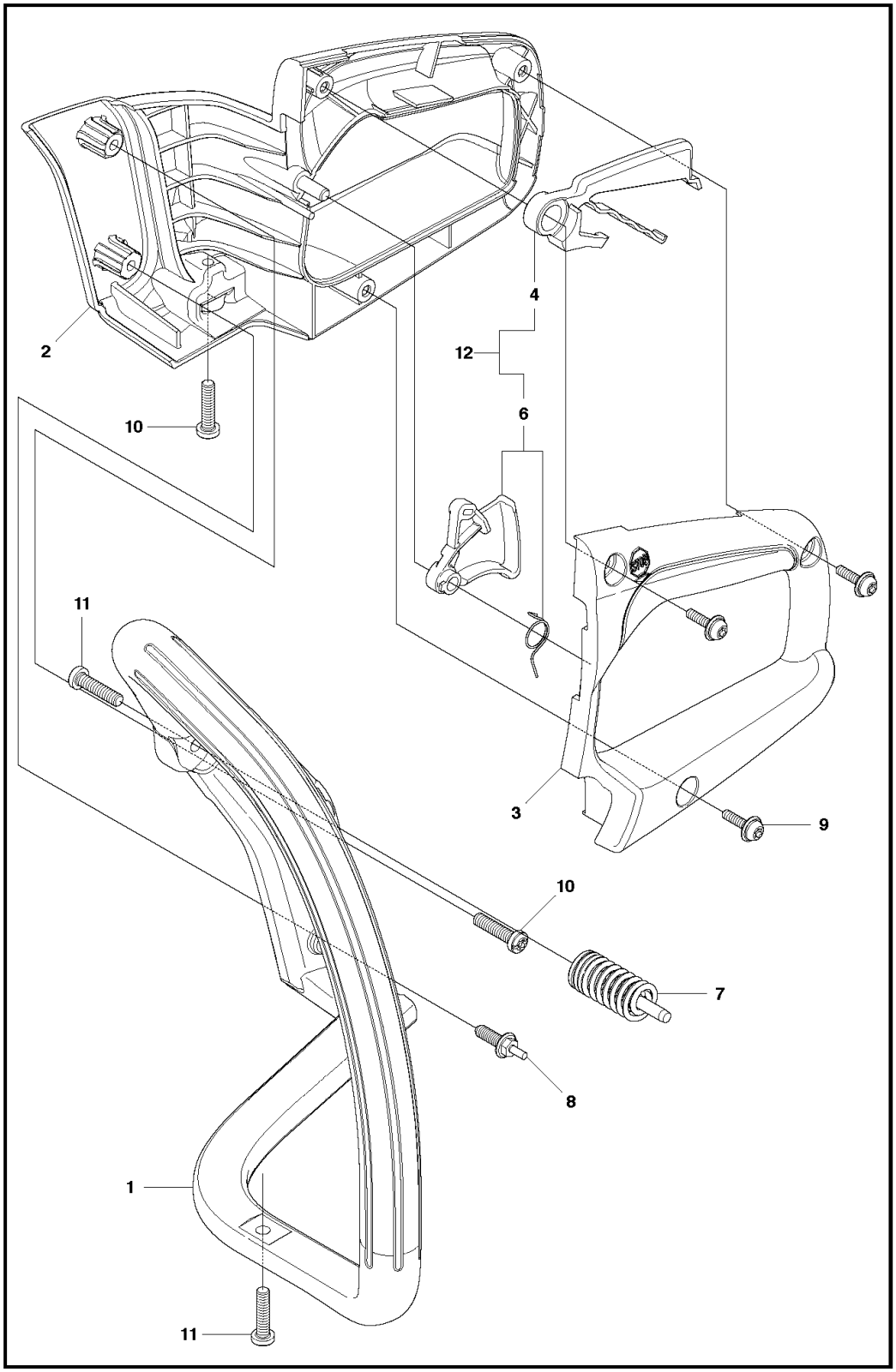

Ref.	Article N.	Description	Qty	Kit
1	587465401	WRENCH *For all EXCEPT For 967861912, 967861934, 967861936. WRENCH CHAINBRAKE RESET.*	1	-
1	587417201	WRENCH *For 967861912, 967861934, 967861936, 970515014, 970515016, 970515024*	1	-
1	586936202	CARBURETTOR	1	-

Ref.	Article N.	Description	Qty	Kit
		CARBURETOR WITH PURGE BULB		
2	577815201	THROTTLE *THROTTLE WIRE*	1	-
3	575493401	AIR FILTER *HOUSING*	1	-
4	545061801	AIR FILTER *AIR FILTER*	1	-
5	545151801	PLATE *FILTER PLATE*	1	-
6	530016101	NUT *NUT*	2	-
7	545061901	ISOLATOR *ISOLATOR FILTER HOUSING*	1	-
8	545063401	SWITCH. SPRING *SWITCH SPRING*	1	-
9	545061701	SWITCH LEVER *SWITCH LEVER*	1	-
10	545061601	CHOKE KNOB *CHOKE KNOB*	1	-
11	545061501	CARB ADAPTOR SEAL *CARB ADAPTOR SEAL*	1	-
13	577636501	ADAPTOR *ADAPTOR CARBURETOR*	1	-
15	545033701	STUD-CARBURETOR *STUD-CARBURETOR*	2	-
16	545158301	CARB ADAPTOR SCREW *CARB ADAPTOR SCREW*	4	-
17	530016080	SCREW *SCREW*	1	-
18	545074901	TOP STUD-CARBURETOR *TOP STUD-CARBURETOR*	1	-
19	545081892	GASKET KIT *GASKET KIT*	1	-
20	530016349	SCREW *SCREW*	1	-
2	530057950	PIN. DOWEL *PIN. DOWEL*	1	-
3	578936401	LINK	1	-
4	574780301	SCREW *SCREW M3.63-1.34 X 8MM TORX*	1	-
5	530016415	SPRING COMPRESSION *SPRING COMPRESSION*	1	-
6	530016110	SCREW	1	-

Ref.	Article N.	Description	Qty	Kit
		SCREW BAR ADJUSTMENT		
7	530038593	RETAINER *RETAINER BAR ADJUSTMENT*	1	-
8	530015826	PEN *PIN BAR ADJUSTING*	1	-
10	530015913	PEN *PIN BRAKE BAND*	1	-
11	530057923	BRAKE BAND *BRAKE BAND*	1	-
12	525743001	COVER *COVER CHAIN BRAKE*	1	-
13	545227101	SCREW *SCREW*	3	-
14	530015917	NUT *NUT*	2	-
15	545118701	DECAL *DECAL*	1	-
16	525628901	CHAIN BRAKE ASSY *CHAIN BRAKE ASSY*	1	-
1	530014949	CLUTCH *CLUTCH*	1	-
2	530015611	WASHER *WASHER*	1	-
3	530047061	CLUTCH DRUM ASSY *For all EXCEPT 967861902. CLUTCH DRUM ASSY SPUR 3/8 6T.*	1	-
3	530048132	CLUTCH DRUM *For 967861902. CLUTCH DRUM ASSY SPUR .325 7T.*	1	-
4	579621501	WASHER *WASHER THRUST*	1	-
5	525318401	DUST SEAL *DUST SEAL OIL PUMP*	1	-
6	530037820	WORM GEAR *PISTON*	1	-
7	581063901	OIL PUMP ASSY *OIL PUMP ASSY COMPLETE*	1	-
8	545227101	SCREW	1	-
9	545227501	BLOCK *BLOCK OIL*	1	-
10	530049477	ELBOW *ELBOW*	1	-
11	545069401	SEAL *SEAL*	1	-
12	530056533	SCREEN	1	-

Ref.	Article N.	Description	Qty	Kit
		SCREEN		
1	576543201	CYLINDER COVER ASSY *KIT CYLINDER SHIELD*	1	-
2	574320601	SCREW *SCREW M5-0.8X25*	3	-
3	545116502	DECAL *DECAL STARTING INSTRUCTIONS*	1	-
4	545165957	SIGN *DECAL WARNING*	1	-
5	579173401	KIT *KIT CHASSIS BRASS INSERTS*	1	-
1	576243901	BEARING	2	-
2	580302601	CRANKSHAFT	1	-
1	581608001	SEAL *SEAL RADIAL BEARING 12 X 36.2 X 3.7*	2	-
3	577830802	KIT *KIT CRANKSHAFT COMPLETE HARDMOUNT BEARING*	1	-
4	585621401	BEARING *BEARING 37MM OD*	2	-
1	577831102	KIT *For all EXCEPT For 967861912, 967861934, 967861936, 970515014, 970515016, 970515024. KIT PISTON AND CYLINDER HARDMOUNT BEARING.*	1	-
1	577831101	KIT *For 967861912, 967861934, 967861936, 970515014, 970515016, 970515024*	1	-
2	545081501	BOLT *BOLT CYLINDER*	4	-
3	574190901	INSERT *INSERT LEFT 38CC CYLINDER*	1	-
4	574190801	INSERT *INSERT RIGHT 38CC CYLINDER*	1	-
5	585040601	PISTON RING *For all EXCEPT For 967861912, 967861934, 967861936, 970515014, 970515016, 970515024. PISTON RING 38CC PISTON RING.*	1	-
5	530012608	PISTON RING *For 967861912, 967861934, 967861936, 970515014, 970515016, 970515024*	1	-
8	530015697	LOCKING RING *LOCKING RING*	2	-
9	503235108	SPARK PLUG *SPARK PLUG M14X1.25 RCJ7Y*	1	-
10	545081894	KIT *For 967861912, 967861934, 967861936, 970515014, 970515016, 970515024*	1	-
10	577831302	KIT	1	-

Ref.	Article N.	Description	Qty	Kit
		For all EXCEPT For 967861912, 967861934, 967861936, 970515014, 970515016, 970515024. KIT PISTON HARDMOUNT BEARING.		
1	577611901	HAND GUARD *HAND GUARD ASSY HHS*	1	-
2	545127301	BOSS *BOSS SCREW HANDGUARD*	1	-
3	545061201	REAR WHEEL *REAR WHEEL*	1	-
4	545227101	SCREW *SCREW*	1	-
5	545075401	GROMMET *GROMMET REAR WALL*	1	-
6	545071401	BAR *BAR PLATE MOUNTING*	1	-
7	545071301	CAP. SPRING HANDGUARD *CAP. SPRING HANDGUARD*	1	-
8	545071201	SPRING. HANDGUARD POSITION *SPRING. HANDGUARD POSITION*	1	-
11	587026801	CHASSIS *For all EXCEPT 967861912, 967861934, 967861936, 970515014, 970515016, 970515024. CHASSIS ASSEMBLY MACH. BEARING.*	1	-
11	579665204	CHASSIS *For 970515014, 970515016, 970515024, 967861912, 967861936, 967861934*	1	-
13	529310301	BOLT *BOLT M8 X 1.25*	2	-
14	545033501	HOSE *HOSE*	1	-
15	530029868	PLUG *PLUG*	1	-
16	530026119	CHECK VALVE *CHECK VALVE DUCKBILL*	1	-
17	580727101	FUEL HOSE *FUEL HOSE KIT LP100 5.3 O.D.*	1	-
18	530023877	NIPPLE *NIPPLE FITTING - FUEL LINE*	1	-
20	545061901	ISOLATOR *ISOLATOR FILTER HOUSING*	1	-
21	544111203	TANK CAP ASSY *TANK CAP ASSY GREY*	2	-
22	530015906	SCREW *SCREW*	2	-
23	545033801	ISOLATOR *ISOLATOR ASSY FRONT*	1	-

Ref.	Article N.	Description	Qty	Kit
25	545063101	SPRING *For all EXCEPT 967861912, 967861934, 967861936, 970515014, 970515016, 970515024. SPRING REAR ISOLATOR.*	1	-
25	577540601	SPRING *For 967861912, 967861934, 967861936, 970515014, 970515016, 970515024*	1	-
26	577167201	FUEL FILTER *ASSEMBLY FUEL PICKUP PRE FLUSHED*	1	-
27	580727101	FUEL HOSE *FUEL HOSE KIT LP100 5.3 O.D.*	1	-
28	530015814	SCREW *SCREW PT 60/10-14*	1	-
29	530029850	CHAIN CATCHER *CHAIN CATCHER*	1	-
30	530038990	FELLING DOG *FELLING DOG*	1	-
31	530016439	SCREW *SCREW*	2	-
32	530014381	FELLING DOG *FELLING DOG KIT SPIKE ASSEMBLY*	1	-
33	503735801	BUSHING *For 967861912, 967861934, 967861936, 970515014, 970515016, 970515024*	1	-
33	580457501	GROMMET *For all EXCEPT 967861912, 967861934, 967861936, 970515014, 970515016, 970515024. GROMMET FUEL LINE.*	1	-
34	592969801	SPACER PLATE *SPACER PLATE*	1	-
1	545062401	FRONT HANDLE *FRONT HANDLE*	1	-
2	545062202	REAR HANDLE W/OVMLD 240E *For 967861912, 967861934, 967861936, 970515014, 970515016, 970515024*	1	-
2	545062201	REAR HANDLE *For all EXCEPT For 967861912, 967861934, 967861936, 970515014, 970515016, 970515024. REAR HANDLE NO OVERMOLD.*	1	-
3	545062302	REAR HANDLE COVER W/OVMLD 240E *For 967861912, 967861934, 967861936, 970515014, 970515016, 970515024*	1	-
3	545062301	REAR HANDLE COVER 235/235E *For all EXCEPT For 967861912, 967861934, 967861936, 970515014, 970515016, 970515024. REAR HANDLE COVER NO OVERMOLD.*	1	-
4	545062601	LOCKOUT- THROTTLE *LOCKOUT- THROTTLE*	1	-
6	578246701	TRIGGER *TRIGGER ASSEMBLY GRAY*	1	-

Ref.	Article N.	Description	Qty	Kit
7	545033901	ISOLATOR *ISOLATOR ASU FRONT ISOLATOR*	1	-
8	545076301	ISOLATION LIMITER SCREW *ISOLATION LIMITER SCREW M5.28 - 1.8 X 14.75 PL HEX M4 SPECIAL*	1	-
9	530016433	SCREW *SCREW #8-16 X 15.1 PL PAN TRX T25*	3	-
10	530016349	SCREW *SCREW*	2	-
11	530016432	SCREW *SCREW SCREW M5.38-14X22.225MM*	2	-
12	578862201	THROTTLE TRIGGER *KIT TRIGGER & LOCKOUT*	1	-
1	575635502	FLYWHEEL *FLYWHEEL ASSY*	1	-
2	530015127	WASHER *WASHER 5/16 RAMP CONICAL*	1	-
3	530016134	NUT *NUT HEX M8-1 RH GR8*	1	-
4	575803501	MODULE *MODULE*	1	-
5	545121901	SCREW *SCREW M4-0.7X16MM SEMS T20*	2	-
6	545079901	ASSY- WIRE HARNESS *ASSY- WIRE HARNESS*	1	-
1	574266401	NUT *NUT 10MM BRASS*	1	-
2	545076901	EXHAUST PLATE *EXHAUST PLATE*	1	-
3	545167401	SCREEN *SCREEN ARRESTOR GASKET*	1	-
4	530016338	BOLT *BOLT*	2	-
5	586094301	MUFFLER *MUFFLER ASSY*	1	-
6	530054884	MUFFLER GASKET *MUFFLER GASKET*	1	-
7	545066901	MUFFLER BACK PLATE *MUFFLER BACK PLATE*	1	-
8	545008027	KIT *KIT SPARK ARRESTOR*	1	-
9	545180843	MUFFLER *MUFFLER KIT COMPLETE*	1	-
1	530021179	SCREW	1	-

Ref.	Article N.	Description	Qty	Kit
		SCREW		
2	530059677	SLEEVE *SLEEVE*	1	-
3	530021180	SPRING *Spring*	1	-
4	530016080	SCREW *SCREW*	1	-
5	545058201	PULLEY *PULLEY*	1	-
6	530042095	SPRING *SPRING*	1	-
7	530071966	STARTER PULLEY *EPS STARTER KIT (INCL. PULLEY)*	1	-
8	545063801	BAFFLE *BAFFLE*	1	-
9	545063701	FAN HOUSING *FAN HOUSING*	1	-
10	545010010	HANDLE *HANDLE ROPE ASSY*	1	-
11	530016432	SCREW *SCREW SCREW M5.38-14X22.225MM*	4	-
12	545008024	KIT *KIT COMPLETE*	1	-
13	594914101	DECAL *DECAL FAN HOUSING 120 MARK II*	1	-
1	545008028	STARTER PULLEY *KIT STD STARTER*	1	-
2	530015920	SCREW *SCREW*	1	-
3	530016080	SCREW *SCREW*	1	-
4	530057890	STARTER PULLEY *STARTER PULLEY*	1	-
5	545010010	HANDLE *HANDLE ROPE ASSY*	1	-
6	545008013	SPRING CASSETTE ASSY *SPRING*	1	-
7	545063801	BAFFLE *BAFFLE*	1	-
8	545063701	FAN HOUSING *FAN HOUSING*	1	-
9	530016432	SCREW *SCREW SCREW M5.38-14X22.225MM*	4	-

Ref.	Article N.	Description	Qty	Kit
10	545008025	STARTER ASSY *KIT COMPLETE*	1	-
11	594914101	DECAL *DECAL FAN HOUSING 120 MARK II*	1	-
1	587609701	KIT *KIT CARB REPAIR*	1	-
2	573977601	KIT *CARBURETOR GASKET*	1	-
3	545008030	PURGE *PURGE AND LINE ASSEMBLY*	1	-
4	586936202	CARBURETTOR *CARBURETOR*	1	-

IGNITION SYSTEM

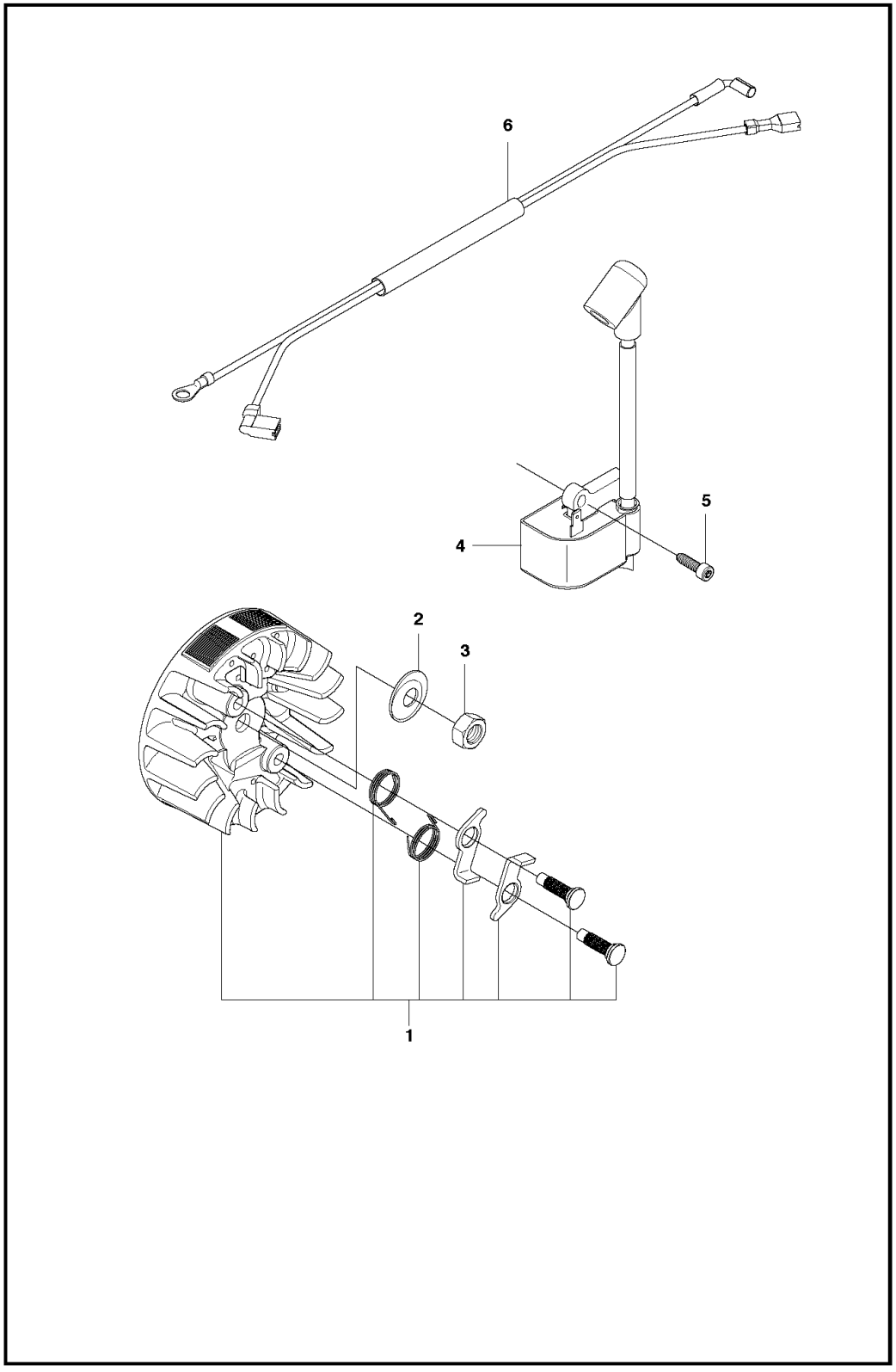

Ref.	Article N.	Description	Qty	Kit
1	587465401	WRENCH *For all EXCEPT For 967861912, 967861934, 967861936. WRENCH CHAINBRAKE RESET.*	1	-
1	587417201	WRENCH *For 967861912, 967861934, 967861936, 970515014, 970515016, 970515024*	1	-
1	586936202	CARBURETTOR	1	-

Ref.	Article N.	Description	Qty	Kit
		CARBURETOR WITH PURGE BULB		
2	577815201	THROTTLE *THROTTLE WIRE*	1	-
3	575493401	AIR FILTER *HOUSING*	1	-
4	545061801	AIR FILTER *AIR FILTER*	1	-
5	545151801	PLATE *FILTER PLATE*	1	-
6	530016101	NUT *NUT*	2	-
7	545061901	ISOLATOR *ISOLATOR FILTER HOUSING*	1	-
8	545063401	SWITCH. SPRING *SWITCH SPRING*	1	-
9	545061701	SWITCH LEVER *SWITCH LEVER*	1	-
10	545061601	CHOKE KNOB *CHOKE KNOB*	1	-
11	545061501	CARB ADAPTOR SEAL *CARB ADAPTOR SEAL*	1	-
13	577636501	ADAPTOR *ADAPTOR CARBURETOR*	1	-
15	545033701	STUD-CARBURETOR *STUD-CARBURETOR*	2	-
16	545158301	CARB ADAPTOR SCREW *CARB ADAPTOR SCREW*	4	-
17	530016080	SCREW *SCREW*	1	-
18	545074901	TOP STUD-CARBURETOR *TOP STUD-CARBURETOR*	1	-
19	545081892	GASKET KIT *GASKET KIT*	1	-
20	530016349	SCREW *SCREW*	1	-
2	530057950	PIN. DOWEL *PIN. DOWEL*	1	-
3	578936401	LINK	1	-
4	574780301	SCREW *SCREW M3.63-1.34 X 8MM TORX*	1	-
5	530016415	SPRING COMPRESSION *SPRING COMPRESSION*	1	-
6	530016110	SCREW	1	-

Ref.	Article N.	Description	Qty	Kit
		SCREW BAR ADJUSTMENT		
7	530038593	RETAINER *RETAINER BAR ADJUSTMENT*	1	-
8	530015826	PEN *PIN BAR ADJUSTING*	1	-
10	530015913	PEN *PIN BRAKE BAND*	1	-
11	530057923	BRAKE BAND *BRAKE BAND*	1	-
12	525743001	COVER *COVER CHAIN BRAKE*	1	-
13	545227101	SCREW *SCREW*	3	-
14	530015917	NUT *NUT*	2	-
15	545118701	DECAL *DECAL*	1	-
16	525628901	CHAIN BRAKE ASSY *CHAIN BRAKE ASSY*	1	-
1	530014949	CLUTCH *CLUTCH*	1	-
2	530015611	WASHER *WASHER*	1	-
3	530047061	CLUTCH DRUM ASSY *For all EXCEPT 967861902. CLUTCH DRUM ASSY SPUR 3/8 6T.*	1	-
3	530048132	CLUTCH DRUM *For 967861902. CLUTCH DRUM ASSY SPUR .325 7T.*	1	-
4	579621501	WASHER *WASHER THRUST*	1	-
5	525318401	DUST SEAL *DUST SEAL OIL PUMP*	1	-
6	530037820	WORM GEAR *PISTON*	1	-
7	581063901	OIL PUMP ASSY *OIL PUMP ASSY COMPLETE*	1	-
8	545227101	SCREW	1	-
9	545227501	BLOCK *BLOCK OIL*	1	-
10	530049477	ELBOW *ELBOW*	1	-
11	545069401	SEAL *SEAL*	1	-
12	530056533	SCREEN	1	-

Ref.	Article N.	Description	Qty	Kit
		SCREEN		
1	576543201	CYLINDER COVER ASSY *KIT CYLINDER SHIELD*	1	-
2	574320601	SCREW *SCREW M5-0.8X25*	3	-
3	545116502	DECAL *DECAL STARTING INSTRUCTIONS*	1	-
4	545165957	SIGN *DECAL WARNING*	1	-
5	579173401	KIT *KIT CHASSIS BRASS INSERTS*	1	-
1	576243901	BEARING	2	-
2	580302601	CRANKSHAFT	1	-
1	581608001	SEAL *SEAL RADIAL BEARING 12 X 36.2 X 3.7*	2	-
3	577830802	KIT *KIT CRANKSHAFT COMPLETE HARDMOUNT BEARING*	1	-
4	585621401	BEARING *BEARING 37MM OD*	2	-
1	577831102	KIT *For all EXCEPT For 967861912, 967861934, 967861936, 970515014, 970515016, 970515024. KIT PISTON AND CYLINDER HARDMOUNT BEARING.*	1	-
1	577831101	KIT *For 967861912, 967861934, 967861936, 970515014, 970515016, 970515024*	1	-
2	545081501	BOLT *BOLT CYLINDER*	4	-
3	574190901	INSERT *INSERT LEFT 38CC CYLINDER*	1	-
4	574190801	INSERT *INSERT RIGHT 38CC CYLINDER*	1	-
5	585040601	PISTON RING *For all EXCEPT For 967861912, 967861934, 967861936, 970515014, 970515016, 970515024. PISTON RING 38CC PISTON RING.*	1	-
5	530012608	PISTON RING *For 967861912, 967861934, 967861936, 970515014, 970515016, 970515024*	1	-
8	530015697	LOCKING RING *LOCKING RING*	2	-
9	503235108	SPARK PLUG *SPARK PLUG M14X1.25 RCJ7Y*	1	-
10	545081894	KIT *For 967861912, 967861934, 967861936, 970515014, 970515016, 970515024*	1	-
10	577831302	KIT	1	-

Ref.	Article N.	Description	Qty	Kit
		For all EXCEPT For 967861912, 967861934, 967861936, 970515014, 970515016, 970515024. KIT PISTON HARDMOUNT BEARING.		
1	577611901	HAND GUARD *HAND GUARD ASSY HHS*	1	-
2	545127301	BOSS *BOSS SCREW HANDGUARD*	1	-
3	545061201	REAR WHEEL *REAR WHEEL*	1	-
4	545227101	SCREW *SCREW*	1	-
5	545075401	GROMMET *GROMMET REAR WALL*	1	-
6	545071401	BAR *BAR PLATE MOUNTING*	1	-
7	545071301	CAP. SPRING HANDGUARD *CAP. SPRING HANDGUARD*	1	-
8	545071201	SPRING. HANDGUARD POSITION *SPRING. HANDGUARD POSITION*	1	-
11	587026801	CHASSIS *For all EXCEPT 967861912, 967861934, 967861936, 970515014, 970515016, 970515024. CHASSIS ASSEMBLY MACH. BEARING.*	1	-
11	579665204	CHASSIS *For 970515014, 970515016, 970515024, 967861912, 967861936, 967861934*	1	-
13	529310301	BOLT *BOLT M8 X 1.25*	2	-
14	545033501	HOSE *HOSE*	1	-
15	530029868	PLUG *PLUG*	1	-
16	530026119	CHECK VALVE *CHECK VALVE DUCKBILL*	1	-
17	580727101	FUEL HOSE *FUEL HOSE KIT LP100 5.3 O.D.*	1	-
18	530023877	NIPPLE *NIPPLE FITTING - FUEL LINE*	1	-
20	545061901	ISOLATOR *ISOLATOR FILTER HOUSING*	1	-
21	544111203	TANK CAP ASSY *TANK CAP ASSY GREY*	2	-
22	530015906	SCREW *SCREW*	2	-
23	545033801	ISOLATOR *ISOLATOR ASSY FRONT*	1	-

Ref.	Article N.	Description	Qty	Kit
25	545063101	SPRING *For all EXCEPT 967861912, 967861934, 967861936, 970515014, 970515016, 970515024. SPRING REAR ISOLATOR.*	1	-
25	577540601	SPRING *For 967861912, 967861934, 967861936, 970515014, 970515016, 970515024*	1	-
26	577167201	FUEL FILTER *ASSEMBLY FUEL PICKUP PRE FLUSHED*	1	-
27	580727101	FUEL HOSE *FUEL HOSE KIT LP100 5.3 O.D.*	1	-
28	530015814	SCREW *SCREW PT 60/10-14*	1	-
29	530029850	CHAIN CATCHER *CHAIN CATCHER*	1	-
30	530038990	FELLING DOG *FELLING DOG*	1	-
31	530016439	SCREW *SCREW*	2	-
32	530014381	FELLING DOG *FELLING DOG KIT SPIKE ASSEMBLY*	1	-
33	503735801	BUSHING *For 967861912, 967861934, 967861936, 970515014, 970515016, 970515024*	1	-
33	580457501	GROMMET *For all EXCEPT 967861912, 967861934, 967861936, 970515014, 970515016, 970515024. GROMMET FUEL LINE.*	1	-
34	592969801	SPACER PLATE *SPACER PLATE*	1	-
1	545062401	FRONT HANDLE *FRONT HANDLE*	1	-
2	545062202	REAR HANDLE W/OVMLD 240E *For 967861912, 967861934, 967861936, 970515014, 970515016, 970515024*	1	-
2	545062201	REAR HANDLE *For all EXCEPT For 967861912, 967861934, 967861936, 970515014, 970515016, 970515024. REAR HANDLE NO OVERMOLD.*	1	-
3	545062302	REAR HANDLE COVER W/OVMLD 240E *For 967861912, 967861934, 967861936, 970515014, 970515016, 970515024*	1	-
3	545062301	REAR HANDLE COVER 235/235E *For all EXCEPT For 967861912, 967861934, 967861936, 970515014, 970515016, 970515024. REAR HANDLE COVER NO OVERMOLD.*	1	-
4	545062601	LOCKOUT- THROTTLE *LOCKOUT- THROTTLE*	1	-
6	578246701	TRIGGER *TRIGGER ASSEMBLY GRAY*	1	-

Ref.	Article N.	Description	Qty	Kit
7	545033901	ISOLATOR *ISOLATOR ASU FRONT ISOLATOR*	1	-
8	545076301	ISOLATION LIMITER SCREW *ISOLATION LIMITER SCREW M5.28 - 1.8 X 14.75 PL HEX M4 SPECIAL*	1	-
9	530016433	SCREW *SCREW #8-16 X 15.1 PL PAN TRX T25*	3	-
10	530016349	SCREW *SCREW*	2	-
11	530016432	SCREW *SCREW SCREW M5.38-14X22.225MM*	2	-
12	578862201	THROTTLE TRIGGER *KIT TRIGGER & LOCKOUT*	1	-
1	575635502	FLYWHEEL *FLYWHEEL ASSY*	1	-
2	530015127	WASHER *WASHER 5/16 RAMP CONICAL*	1	-
3	530016134	NUT *NUT HEX M8-1 RH GR8*	1	-
4	575803501	MODULE *MODULE*	1	-
5	545121901	SCREW *SCREW M4-0.7X16MM SEMS T20*	2	-
6	545079901	ASSY- WIRE HARNESS *ASSY- WIRE HARNESS*	1	-
1	574266401	NUT *NUT 10MM BRASS*	1	-
2	545076901	EXHAUST PLATE *EXHAUST PLATE*	1	-
3	545167401	SCREEN *SCREEN ARRESTOR GASKET*	1	-
4	530016338	BOLT *BOLT*	2	-
5	586094301	MUFFLER *MUFFLER ASSY*	1	-
6	530054884	MUFFLER GASKET *MUFFLER GASKET*	1	-
7	545066901	MUFFLER BACK PLATE *MUFFLER BACK PLATE*	1	-
8	545008027	KIT *KIT SPARK ARRESTOR*	1	-
9	545180843	MUFFLER *MUFFLER KIT COMPLETE*	1	-
1	530021179	SCREW	1	-

Ref.	Article N.	Description	Qty	Kit
		SCREW		
2	530059677	SLEEVE *SLEEVE*	1	-
3	530021180	SPRING *Spring*	1	-
4	530016080	SCREW *SCREW*	1	-
5	545058201	PULLEY *PULLEY*	1	-
6	530042095	SPRING *SPRING*	1	-
7	530071966	STARTER PULLEY *EPS STARTER KIT (INCL. PULLEY)*	1	-
8	545063801	BAFFLE *BAFFLE*	1	-
9	545063701	FAN HOUSING *FAN HOUSING*	1	-
10	545010010	HANDLE *HANDLE ROPE ASSY*	1	-
11	530016432	SCREW *SCREW SCREW M5.38-14X22.225MM*	4	-
12	545008024	KIT *KIT COMPLETE*	1	-
13	594914101	DECAL *DECAL FAN HOUSING 120 MARK II*	1	-
1	545008028	STARTER PULLEY *KIT STD STARTER*	1	-
2	530015920	SCREW *SCREW*	1	-
3	530016080	SCREW *SCREW*	1	-
4	530057890	STARTER PULLEY *STARTER PULLEY*	1	-
5	545010010	HANDLE *HANDLE ROPE ASSY*	1	-
6	545008013	SPRING CASSETTE ASSY *SPRING*	1	-
7	545063801	BAFFLE *BAFFLE*	1	-
8	545063701	FAN HOUSING *FAN HOUSING*	1	-
9	530016432	SCREW *SCREW SCREW M5.38-14X22.225MM*	4	-

Ref.	Article N.	Description	Qty	Kit
10	545008025	STARTER ASSY *KIT COMPLETE*	1	-
11	594914101	DECAL *DECAL FAN HOUSING 120 MARK II*	1	-
1	587609701	KIT *KIT CARB REPAIR*	1	-
2	573977601	KIT *CARBURETOR GASKET*	1	-
3	545008030	PURGE *PURGE AND LINE ASSEMBLY*	1	-
4	586936202	CARBURETTOR *CARBURETOR*	1	-

MUFFLER

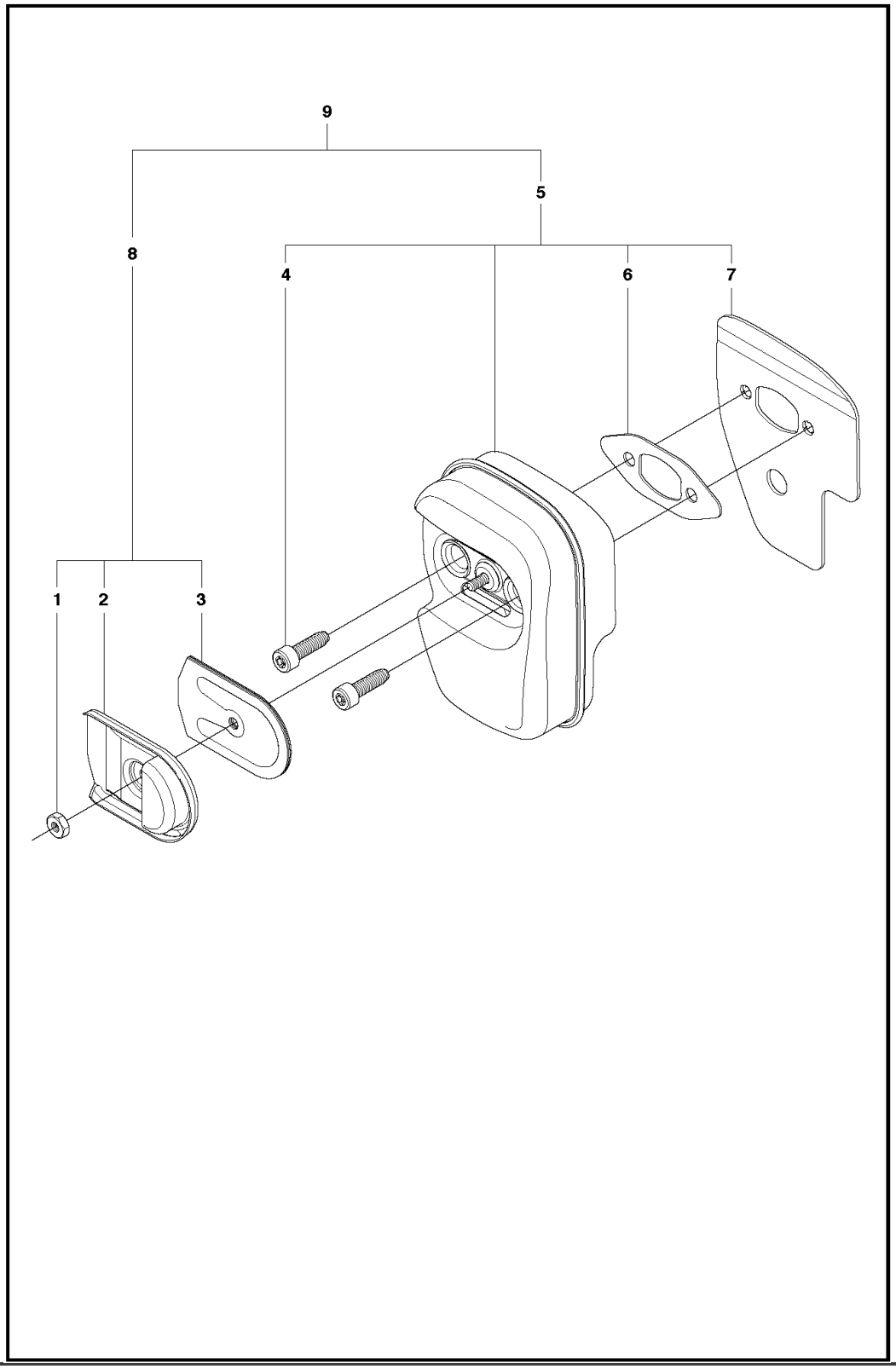

Ref.	Article N.	Description	Qty	Kit
1	587465401	WRENCH *For all EXCEPT For 967861912, 967861934, 967861936. WRENCH CHAINBRAKE RESET.*	1	-
1	587417201	WRENCH *For 967861912, 967861934, 967861936, 970515014, 970515016, 970515024*	1	-
1	586936202	CARBURETTOR	1	-

Ref.	Article N.	Description	Qty	Kit
		CARBURETOR WITH PURGE BULB		
2	577815201	THROTTLE *THROTTLE WIRE*	1	-
3	575493401	AIR FILTER *HOUSING*	1	-
4	545061801	AIR FILTER *AIR FILTER*	1	-
5	545151801	PLATE *FILTER PLATE*	1	-
6	530016101	NUT *NUT*	2	-
7	545061901	ISOLATOR *ISOLATOR FILTER HOUSING*	1	-
8	545063401	SWITCH. SPRING *SWITCH SPRING*	1	-
9	545061701	SWITCH LEVER *SWITCH LEVER*	1	-
10	545061601	CHOKE KNOB *CHOKE KNOB*	1	-
11	545061501	CARB ADAPTOR SEAL *CARB ADAPTOR SEAL*	1	-
13	577636501	ADAPTOR *ADAPTOR CARBURETOR*	1	-
15	545033701	STUD-CARBURETOR *STUD-CARBURETOR*	2	-
16	545158301	CARB ADAPTOR SCREW *CARB ADAPTOR SCREW*	4	-
17	530016080	SCREW *SCREW*	1	-
18	545074901	TOP STUD-CARBURETOR *TOP STUD-CARBURETOR*	1	-
19	545081892	GASKET KIT *GASKET KIT*	1	-
20	530016349	SCREW *SCREW*	1	-
2	530057950	PIN. DOWEL *PIN. DOWEL*	1	-
3	578936401	LINK	1	-
4	574780301	SCREW *SCREW M3.63-1.34 X 8MM TORX*	1	-
5	530016415	SPRING COMPRESSION *SPRING COMPRESSION*	1	-
6	530016110	SCREW	1	-

Ref.	Article N.	Description	Qty	Kit
		SCREW BAR ADJUSTMENT		
7	530038593	RETAINER *RETAINER BAR ADJUSTMENT*	1	-
8	530015826	PEN *PIN BAR ADJUSTING*	1	-
10	530015913	PEN *PIN BRAKE BAND*	1	-
11	530057923	BRAKE BAND *BRAKE BAND*	1	-
12	525743001	COVER *COVER CHAIN BRAKE*	1	-
13	545227101	SCREW *SCREW*	3	-
14	530015917	NUT *NUT*	2	-
15	545118701	DECAL *DECAL*	1	-
16	525628901	CHAIN BRAKE ASSY *CHAIN BRAKE ASSY*	1	-
1	530014949	CLUTCH *CLUTCH*	1	-
2	530015611	WASHER *WASHER*	1	-
3	530047061	CLUTCH DRUM ASSY *For all EXCEPT 967861902. CLUTCH DRUM ASSY SPUR 3/8 6T.*	1	-
3	530048132	CLUTCH DRUM *For 967861902. CLUTCH DRUM ASSY SPUR .325 7T.*	1	-
4	579621501	WASHER *WASHER THRUST*	1	-
5	525318401	DUST SEAL *DUST SEAL OIL PUMP*	1	-
6	530037820	WORM GEAR *PISTON*	1	-
7	581063901	OIL PUMP ASSY *OIL PUMP ASSY COMPLETE*	1	-
8	545227101	SCREW	1	-
9	545227501	BLOCK *BLOCK OIL*	1	-
10	530049477	ELBOW *ELBOW*	1	-
11	545069401	SEAL *SEAL*	1	-
12	530056533	SCREEN	1	-

Ref.	Article N.	Description	Qty	Kit
		SCREEN		
1	576543201	CYLINDER COVER ASSY *KIT CYLINDER SHIELD*	1	-
2	574320601	SCREW *SCREW M5-0.8X25*	3	-
3	545116502	DECAL *DECAL STARTING INSTRUCTIONS*	1	-
4	545165957	SIGN *DECAL WARNING*	1	-
5	579173401	KIT *KIT CHASSIS BRASS INSERTS*	1	-
1	576243901	BEARING	2	-
2	580302601	CRANKSHAFT	1	-
1	581608001	SEAL *SEAL RADIAL BEARING 12 X 36.2 X 3.7*	2	-
3	577830802	KIT *KIT CRANKSHAFT COMPLETE HARDMOUNT BEARING*	1	-
4	585621401	BEARING *BEARING 37MM OD*	2	-
1	577831102	KIT *For all EXCEPT For 967861912, 967861934, 967861936, 970515014, 970515016, 970515024. KIT PISTON AND CYLINDER HARDMOUNT BEARING.*	1	-
1	577831101	KIT *For 967861912, 967861934, 967861936, 970515014, 970515016, 970515024*	1	-
2	545081501	BOLT *BOLT CYLINDER*	4	-
3	574190901	INSERT *INSERT LEFT 38CC CYLINDER*	1	-
4	574190801	INSERT *INSERT RIGHT 38CC CYLINDER*	1	-
5	585040601	PISTON RING *For all EXCEPT For 967861912, 967861934, 967861936, 970515014, 970515016, 970515024. PISTON RING 38CC PISTON RING.*	1	-
5	530012608	PISTON RING *For 967861912, 967861934, 967861936, 970515014, 970515016, 970515024*	1	-
8	530015697	LOCKING RING *LOCKING RING*	2	-
9	503235108	SPARK PLUG *SPARK PLUG M14X1.25 RCJ7Y*	1	-
10	545081894	KIT *For 967861912, 967861934, 967861936, 970515014, 970515016, 970515024*	1	-
10	577831302	KIT	1	-

Ref.	Article N.	Description	Qty	Kit
		For all EXCEPT For 967861912, 967861934, 967861936, 970515014, 970515016, 970515024. KIT PISTON HARDMOUNT BEARING.		
1	577611901	HAND GUARD *HAND GUARD ASSY HHS*	1	-
2	545127301	BOSS *BOSS SCREW HANDGUARD*	1	-
3	545061201	REAR WHEEL *REAR WHEEL*	1	-
4	545227101	SCREW *SCREW*	1	-
5	545075401	GROMMET *GROMMET REAR WALL*	1	-
6	545071401	BAR *BAR PLATE MOUNTING*	1	-
7	545071301	CAP. SPRING HANDGUARD *CAP. SPRING HANDGUARD*	1	-
8	545071201	SPRING. HANDGUARD POSITION *SPRING. HANDGUARD POSITION*	1	-
11	587026801	CHASSIS *For all EXCEPT 967861912, 967861934, 967861936, 970515014, 970515016, 970515024. CHASSIS ASSEMBLY MACH. BEARING.*	1	-
11	579665204	CHASSIS *For 970515014, 970515016, 970515024, 967861912, 967861936, 967861934*	1	-
13	529310301	BOLT *BOLT M8 X 1.25*	2	-
14	545033501	HOSE *HOSE*	1	-
15	530029868	PLUG *PLUG*	1	-
16	530026119	CHECK VALVE *CHECK VALVE DUCKBILL*	1	-
17	580727101	FUEL HOSE *FUEL HOSE KIT LP100 5.3 O.D.*	1	-
18	530023877	NIPPLE *NIPPLE FITTING - FUEL LINE*	1	-
20	545061901	ISOLATOR *ISOLATOR FILTER HOUSING*	1	-
21	544111203	TANK CAP ASSY *TANK CAP ASSY GREY*	2	-
22	530015906	SCREW *SCREW*	2	-
23	545033801	ISOLATOR *ISOLATOR ASSY FRONT*	1	-

Ref.	Article N.	Description	Qty	Kit
25	545063101	SPRING *For all EXCEPT 967861912, 967861934, 967861936, 970515014, 970515016, 970515024. SPRING REAR ISOLATOR.*	1	-
25	577540601	SPRING *For 967861912, 967861934, 967861936, 970515014, 970515016, 970515024*	1	-
26	577167201	FUEL FILTER *ASSEMBLY FUEL PICKUP PRE FLUSHED*	1	-
27	580727101	FUEL HOSE *FUEL HOSE KIT LP100 5.3 O.D.*	1	-
28	530015814	SCREW *SCREW PT 60/10-14*	1	-
29	530029850	CHAIN CATCHER *CHAIN CATCHER*	1	-
30	530038990	FELLING DOG *FELLING DOG*	1	-
31	530016439	SCREW *SCREW*	2	-
32	530014381	FELLING DOG *FELLING DOG KIT SPIKE ASSEMBLY*	1	-
33	503735801	BUSHING *For 967861912, 967861934, 967861936, 970515014, 970515016, 970515024*	1	-
33	580457501	GROMMET *For all EXCEPT 967861912, 967861934, 967861936, 970515014, 970515016, 970515024. GROMMET FUEL LINE.*	1	-
34	592969801	SPACER PLATE *SPACER PLATE*	1	-
1	545062401	FRONT HANDLE *FRONT HANDLE*	1	-
2	545062202	REAR HANDLE W/OVMLD 240E *For 967861912, 967861934, 967861936, 970515014, 970515016, 970515024*	1	-
2	545062201	REAR HANDLE *For all EXCEPT For 967861912, 967861934, 967861936, 970515014, 970515016, 970515024. REAR HANDLE NO OVERMOLD.*	1	-
3	545062302	REAR HANDLE COVER W/OVMLD 240E *For 967861912, 967861934, 967861936, 970515014, 970515016, 970515024*	1	-
3	545062301	REAR HANDLE COVER 235/235E *For all EXCEPT For 967861912, 967861934, 967861936, 970515014, 970515016, 970515024. REAR HANDLE COVER NO OVERMOLD.*	1	-
4	545062601	LOCKOUT- THROTTLE *LOCKOUT- THROTTLE*	1	-
6	578246701	TRIGGER *TRIGGER ASSEMBLY GRAY*	1	-

Ref.	Article N.	Description	Qty	Kit
7	545033901	ISOLATOR *ISOLATOR ASU FRONT ISOLATOR*	1	-
8	545076301	ISOLATION LIMITER SCREW *ISOLATION LIMITER SCREW M5.28 - 1.8 X 14.75 PL HEX M4 SPECIAL*	1	-
9	530016433	SCREW *SCREW #8-16 X 15.1 PL PAN TRX T25*	3	-
10	530016349	SCREW *SCREW*	2	-
11	530016432	SCREW *SCREW SCREW M5.38-14X22.225MM*	2	-
12	578862201	THROTTLE TRIGGER *KIT TRIGGER & LOCKOUT*	1	-
1	575635502	FLYWHEEL *FLYWHEEL ASSY*	1	-
2	530015127	WASHER *WASHER 5/16 RAMP CONICAL*	1	-
3	530016134	NUT *NUT HEX M8-1 RH GR8*	1	-
4	575803501	MODULE *MODULE*	1	-
5	545121901	SCREW *SCREW M4-0.7X16MM SEMS T20*	2	-
6	545079901	ASSY- WIRE HARNESS *ASSY- WIRE HARNESS*	1	-
1	574266401	NUT *NUT 10MM BRASS*	1	-
2	545076901	EXHAUST PLATE *EXHAUST PLATE*	1	-
3	545167401	SCREEN *SCREEN ARRESTOR GASKET*	1	-
4	530016338	BOLT *BOLT*	2	-
5	586094301	MUFFLER *MUFFLER ASSY*	1	-
6	530054884	MUFFLER GASKET *MUFFLER GASKET*	1	-
7	545066901	MUFFLER BACK PLATE *MUFFLER BACK PLATE*	1	-
8	545008027	KIT *KIT SPARK ARRESTOR*	1	-
9	545180843	MUFFLER *MUFFLER KIT COMPLETE*	1	-
1	530021179	SCREW	1	-

Ref.	Article N.	Description	Qty	Kit
		SCREW		
2	530059677	SLEEVE *SLEEVE*	1	-
3	530021180	SPRING *Spring*	1	-
4	530016080	SCREW *SCREW*	1	-
5	545058201	PULLEY *PULLEY*	1	-
6	530042095	SPRING *SPRING*	1	-
7	530071966	STARTER PULLEY *EPS STARTER KIT (INCL. PULLEY)*	1	-
8	545063801	BAFFLE *BAFFLE*	1	-
9	545063701	FAN HOUSING *FAN HOUSING*	1	-
10	545010010	HANDLE *HANDLE ROPE ASSY*	1	-
11	530016432	SCREW *SCREW SCREW M5.38-14X22.225MM*	4	-
12	545008024	KIT *KIT COMPLETE*	1	-
13	594914101	DECAL *DECAL FAN HOUSING 120 MARK II*	1	-
1	545008028	STARTER PULLEY *KIT STD STARTER*	1	-
2	530015920	SCREW *SCREW*	1	-
3	530016080	SCREW *SCREW*	1	-
4	530057890	STARTER PULLEY *STARTER PULLEY*	1	-
5	545010010	HANDLE *HANDLE ROPE ASSY*	1	-
6	545008013	SPRING CASSETTE ASSY *SPRING*	1	-
7	545063801	BAFFLE *BAFFLE*	1	-
8	545063701	FAN HOUSING *FAN HOUSING*	1	-
9	530016432	SCREW *SCREW SCREW M5.38-14X22.225MM*	4	-

Ref.	Article N.	Description	Qty	Kit
10	545008025	STARTER ASSY *KIT COMPLETE*	1	-
11	594914101	DECAL *DECAL FAN HOUSING 120 MARK II*	1	-
1	587609701	KIT *KIT CARB REPAIR*	1	-
2	573977601	KIT *CARBURETOR GASKET*	1	-
3	545008030	PURGE *PURGE AND LINE ASSEMBLY*	1	-
4	586936202	CARBURETTOR *CARBURETOR*	1	-

STARTER

With Easy Start

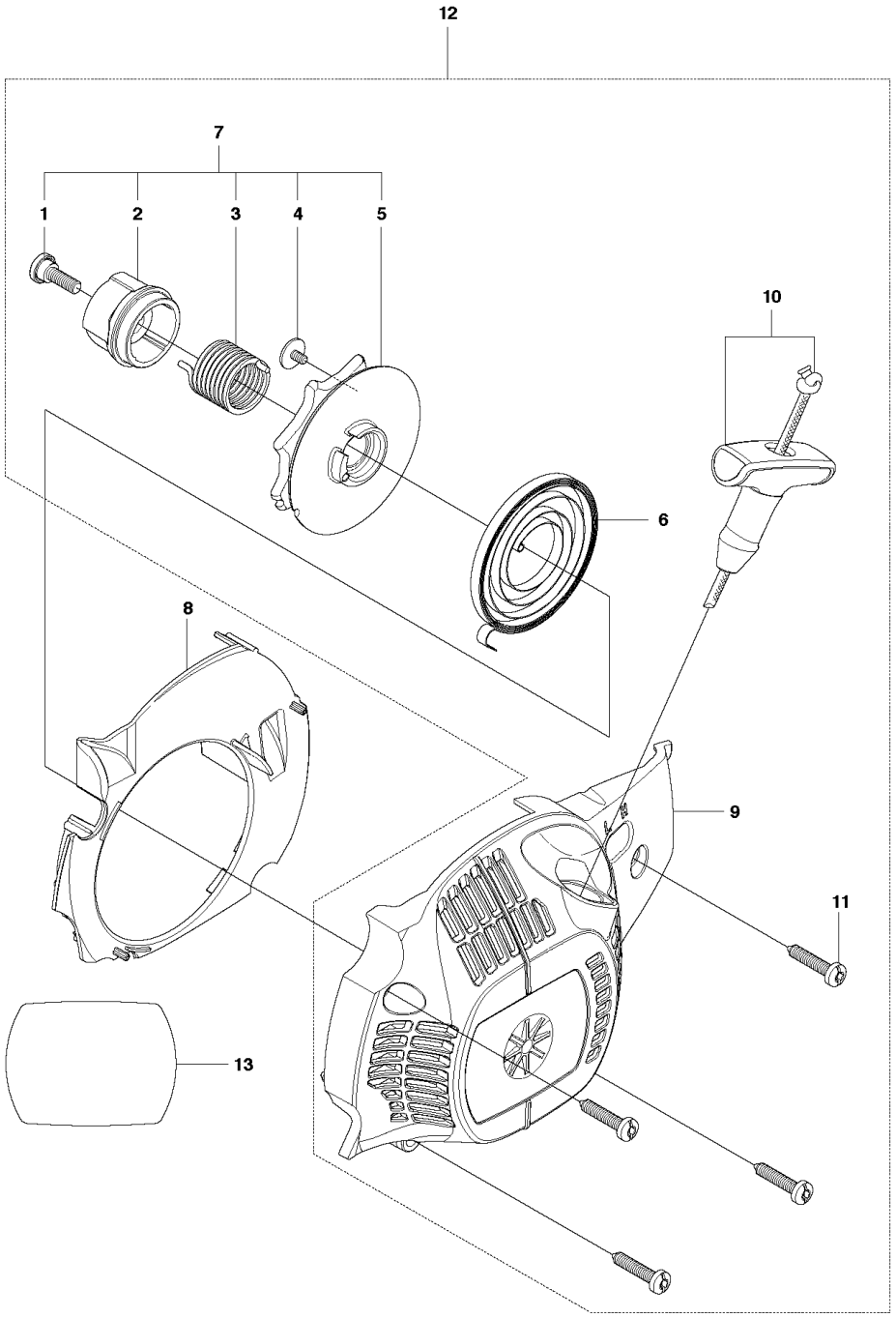

Ref.	Article N.	Description	Qty	Kit
1	587465401	WRENCH *For all EXCEPT For 967861912, 967861934, 967861936. WRENCH CHAINBRAKE RESET.*	1	-
1	587417201	WRENCH *For 967861912, 967861934, 967861936, 970515014, 970515016, 970515024*	1	-
1	586936202	CARBURETTOR	1	-

Ref.	Article N.	Description	Qty	Kit
		CARBURETOR WITH PURGE BULB		
2	577815201	THROTTLE *THROTTLE WIRE*	1	-
3	575493401	AIR FILTER *HOUSING*	1	-
4	545061801	AIR FILTER *AIR FILTER*	1	-
5	545151801	PLATE *FILTER PLATE*	1	-
6	530016101	NUT *NUT*	2	-
7	545061901	ISOLATOR *ISOLATOR FILTER HOUSING*	1	-
8	545063401	SWITCH. SPRING *SWITCH SPRING*	1	-
9	545061701	SWITCH LEVER *SWITCH LEVER*	1	-
10	545061601	CHOKE KNOB *CHOKE KNOB*	1	-
11	545061501	CARB ADAPTOR SEAL *CARB ADAPTOR SEAL*	1	-
13	577636501	ADAPTOR *ADAPTOR CARBURETOR*	1	-
15	545033701	STUD-CARBURETOR *STUD-CARBURETOR*	2	-
16	545158301	CARB ADAPTOR SCREW *CARB ADAPTOR SCREW*	4	-
17	530016080	SCREW *SCREW*	1	-
18	545074901	TOP STUD-CARBURETOR *TOP STUD-CARBURETOR*	1	-
19	545081892	GASKET KIT *GASKET KIT*	1	-
20	530016349	SCREW *SCREW*	1	-
2	530057950	PIN. DOWEL *PIN. DOWEL*	1	-
3	578936401	LINK	1	-
4	574780301	SCREW *SCREW M3.63-1.34 X 8MM TORX*	1	-
5	530016415	SPRING COMPRESSION *SPRING COMPRESSION*	1	-
6	530016110	SCREW	1	-

Ref.	Article N.	Description	Qty	Kit
		SCREW BAR ADJUSTMENT		
7	530038593	RETAINER *RETAINER BAR ADJUSTMENT*	1	-
8	530015826	PEN *PIN BAR ADJUSTING*	1	-
10	530015913	PEN *PIN BRAKE BAND*	1	-
11	530057923	BRAKE BAND *BRAKE BAND*	1	-
12	525743001	COVER *COVER CHAIN BRAKE*	1	-
13	545227101	SCREW *SCREW*	3	-
14	530015917	NUT *NUT*	2	-
15	545118701	DECAL *DECAL*	1	-
16	525628901	CHAIN BRAKE ASSY *CHAIN BRAKE ASSY*	1	-
1	530014949	CLUTCH *CLUTCH*	1	-
2	530015611	WASHER *WASHER*	1	-
3	530047061	CLUTCH DRUM ASSY *For all EXCEPT 967861902. CLUTCH DRUM ASSY SPUR 3/8 6T.*	1	-
3	530048132	CLUTCH DRUM *For 967861902. CLUTCH DRUM ASSY SPUR .325 7T.*	1	-
4	579621501	WASHER *WASHER THRUST*	1	-
5	525318401	DUST SEAL *DUST SEAL OIL PUMP*	1	-
6	530037820	WORM GEAR *PISTON*	1	-
7	581063901	OIL PUMP ASSY *OIL PUMP ASSY COMPLETE*	1	-
8	545227101	SCREW	1	-
9	545227501	BLOCK *BLOCK OIL*	1	-
10	530049477	ELBOW *ELBOW*	1	-
11	545069401	SEAL *SEAL*	1	-
12	530056533	SCREEN	1	-

Ref.	Article N.	Description	Qty	Kit
		SCREEN		
1	576543201	CYLINDER COVER ASSY *KIT CYLINDER SHIELD*	1	-
2	574320601	SCREW *SCREW M5-0.8X25*	3	-
3	545116502	DECAL *DECAL STARTING INSTRUCTIONS*	1	-
4	545165957	SIGN *DECAL WARNING*	1	-
5	579173401	KIT *KIT CHASSIS BRASS INSERTS*	1	-
1	576243901	BEARING	2	-
2	580302601	CRANKSHAFT	1	-
1	581608001	SEAL *SEAL RADIAL BEARING 12 X 36.2 X 3.7*	2	-
3	577830802	KIT *KIT CRANKSHAFT COMPLETE HARDMOUNT BEARING*	1	-
4	585621401	BEARING *BEARING 37MM OD*	2	-
1	577831102	KIT *For all EXCEPT For 967861912, 967861934, 967861936, 970515014, 970515016, 970515024. KIT PISTON AND CYLINDER HARDMOUNT BEARING.*	1	-
1	577831101	KIT *For 967861912, 967861934, 967861936, 970515014, 970515016, 970515024*	1	-
2	545081501	BOLT *BOLT CYLINDER*	4	-
3	574190901	INSERT *INSERT LEFT 38CC CYLINDER*	1	-
4	574190801	INSERT *INSERT RIGHT 38CC CYLINDER*	1	-
5	585040601	PISTON RING *For all EXCEPT For 967861912, 967861934, 967861936, 970515014, 970515016, 970515024. PISTON RING 38CC PISTON RING.*	1	-
5	530012608	PISTON RING *For 967861912, 967861934, 967861936, 970515014, 970515016, 970515024*	1	-
8	530015697	LOCKING RING *LOCKING RING*	2	-
9	503235108	SPARK PLUG *SPARK PLUG M14X1.25 RCJ7Y*	1	-
10	545081894	KIT *For 967861912, 967861934, 967861936, 970515014, 970515016, 970515024*	1	-
10	577831302	KIT	1	-

Ref.	Article N.	Description	Qty	Kit
		For all EXCEPT For 967861912, 967861934, 967861936, 970515014, 970515016, 970515024. KIT PISTON HARDMOUNT BEARING.		
1	577611901	HAND GUARD *HAND GUARD ASSY HHS*	1	-
2	545127301	BOSS *BOSS SCREW HANDGUARD*	1	-
3	545061201	REAR WHEEL *REAR WHEEL*	1	-
4	545227101	SCREW *SCREW*	1	-
5	545075401	GROMMET *GROMMET REAR WALL*	1	-
6	545071401	BAR *BAR PLATE MOUNTING*	1	-
7	545071301	CAP. SPRING HANDGUARD *CAP. SPRING HANDGUARD*	1	-
8	545071201	SPRING. HANDGUARD POSITION *SPRING. HANDGUARD POSITION*	1	-
11	587026801	CHASSIS *For all EXCEPT 967861912, 967861934, 967861936, 970515014, 970515016, 970515024. CHASSIS ASSEMBLY MACH. BEARING.*	1	-
11	579665204	CHASSIS *For 970515014, 970515016, 970515024, 967861912, 967861936, 967861934*	1	-
13	529310301	BOLT *BOLT M8 X 1.25*	2	-
14	545033501	HOSE *HOSE*	1	-
15	530029868	PLUG *PLUG*	1	-
16	530026119	CHECK VALVE *CHECK VALVE DUCKBILL*	1	-
17	580727101	FUEL HOSE *FUEL HOSE KIT LP100 5.3 O.D.*	1	-
18	530023877	NIPPLE *NIPPLE FITTING - FUEL LINE*	1	-
20	545061901	ISOLATOR *ISOLATOR FILTER HOUSING*	1	-
21	544111203	TANK CAP ASSY *TANK CAP ASSY GREY*	2	-
22	530015906	SCREW *SCREW*	2	-
23	545033801	ISOLATOR *ISOLATOR ASSY FRONT*	1	-

Ref.	Article N.	Description	Qty	Kit
25	545063101	SPRING *For all EXCEPT 967861912, 967861934, 967861936, 970515014, 970515016, 970515024. SPRING REAR ISOLATOR.*	1	-
25	577540601	SPRING *For 967861912, 967861934, 967861936, 970515014, 970515016, 970515024*	1	-
26	577167201	FUEL FILTER *ASSEMBLY FUEL PICKUP PRE FLUSHED*	1	-
27	580727101	FUEL HOSE *FUEL HOSE KIT LP100 5.3 O.D.*	1	-
28	530015814	SCREW *SCREW PT 60/10-14*	1	-
29	530029850	CHAIN CATCHER *CHAIN CATCHER*	1	-
30	530038990	FELLING DOG *FELLING DOG*	1	-
31	530016439	SCREW *SCREW*	2	-
32	530014381	FELLING DOG *FELLING DOG KIT SPIKE ASSEMBLY*	1	-
33	503735801	BUSHING *For 967861912, 967861934, 967861936, 970515014, 970515016, 970515024*	1	-
33	580457501	GROMMET *For all EXCEPT 967861912, 967861934, 967861936, 970515014, 970515016, 970515024. GROMMET FUEL LINE.*	1	-
34	592969801	SPACER PLATE *SPACER PLATE*	1	-
1	545062401	FRONT HANDLE *FRONT HANDLE*	1	-
2	545062202	REAR HANDLE W/OVMLD 240E *For 967861912, 967861934, 967861936, 970515014, 970515016, 970515024*	1	-
2	545062201	REAR HANDLE *For all EXCEPT For 967861912, 967861934, 967861936, 970515014, 970515016, 970515024. REAR HANDLE NO OVERMOLD.*	1	-
3	545062302	REAR HANDLE COVER W/OVMLD 240E *For 967861912, 967861934, 967861936, 970515014, 970515016, 970515024*	1	-
3	545062301	REAR HANDLE COVER 235/235E *For all EXCEPT For 967861912, 967861934, 967861936, 970515014, 970515016, 970515024. REAR HANDLE COVER NO OVERMOLD.*	1	-
4	545062601	LOCKOUT- THROTTLE *LOCKOUT- THROTTLE*	1	-
6	578246701	TRIGGER *TRIGGER ASSEMBLY GRAY*	1	-

Ref.	Article N.	Description	Qty	Kit
7	545033901	ISOLATOR *ISOLATOR ASU FRONT ISOLATOR*	1	-
8	545076301	ISOLATION LIMITER SCREW *ISOLATION LIMITER SCREW M5.28 - 1.8 X 14.75 PL HEX M4 SPECIAL*	1	-
9	530016433	SCREW *SCREW #8-16 X 15.1 PL PAN TRX T25*	3	-
10	530016349	SCREW *SCREW*	2	-
11	530016432	SCREW *SCREW SCREW M5.38-14X22.225MM*	2	-
12	578862201	THROTTLE TRIGGER *KIT TRIGGER & LOCKOUT*	1	-
1	575635502	FLYWHEEL *FLYWHEEL ASSY*	1	-
2	530015127	WASHER *WASHER 5/16 RAMP CONICAL*	1	-
3	530016134	NUT *NUT HEX M8-1 RH GR8*	1	-
4	575803501	MODULE *MODULE*	1	-
5	545121901	SCREW *SCREW M4-0.7X16MM SEMS T20*	2	-
6	545079901	ASSY- WIRE HARNESS *ASSY- WIRE HARNESS*	1	-
1	574266401	NUT *NUT 10MM BRASS*	1	-
2	545076901	EXHAUST PLATE *EXHAUST PLATE*	1	-
3	545167401	SCREEN *SCREEN ARRESTOR GASKET*	1	-
4	530016338	BOLT *BOLT*	2	-
5	586094301	MUFFLER *MUFFLER ASSY*	1	-
6	530054884	MUFFLER GASKET *MUFFLER GASKET*	1	-
7	545066901	MUFFLER BACK PLATE *MUFFLER BACK PLATE*	1	-
8	545008027	KIT *KIT SPARK ARRESTOR*	1	-
9	545180843	MUFFLER *MUFFLER KIT COMPLETE*	1	-
1	530021179	SCREW	1	-

Ref.	Article N.	Description	Qty	Kit
		SCREW		
2	530059677	SLEEVE *SLEEVE*	1	-
3	530021180	SPRING *Spring*	1	-
4	530016080	SCREW *SCREW*	1	-
5	545058201	PULLEY *PULLEY*	1	-
6	530042095	SPRING *SPRING*	1	-
7	530071966	STARTER PULLEY *EPS STARTER KIT (INCL. PULLEY)*	1	-
8	545063801	BAFFLE *BAFFLE*	1	-
9	545063701	FAN HOUSING *FAN HOUSING*	1	-
10	545010010	HANDLE *HANDLE ROPE ASSY*	1	-
11	530016432	SCREW *SCREW SCREW M5.38-14X22.225MM*	4	-
12	545008024	KIT *KIT COMPLETE*	1	-
13	594914101	DECAL *DECAL FAN HOUSING 120 MARK II*	1	-
1	545008028	STARTER PULLEY *KIT STD STARTER*	1	-
2	530015920	SCREW *SCREW*	1	-
3	530016080	SCREW *SCREW*	1	-
4	530057890	STARTER PULLEY *STARTER PULLEY*	1	-
5	545010010	HANDLE *HANDLE ROPE ASSY*	1	-
6	545008013	SPRING CASSETTE ASSY *SPRING*	1	-
7	545063801	BAFFLE *BAFFLE*	1	-
8	545063701	FAN HOUSING *FAN HOUSING*	1	-
9	530016432	SCREW *SCREW SCREW M5.38-14X22.225MM*	4	-

Ref.	Article N.	Description	Qty	Kit
10	545008025	STARTER ASSY *KIT COMPLETE*	1	-
11	594914101	DECAL *DECAL FAN HOUSING 120 MARK II*	1	-
1	587609701	KIT *KIT CARB REPAIR*	1	-
2	573977601	KIT *CARBURETOR GASKET*	1	-
3	545008030	PURGE *PURGE AND LINE ASSEMBLY*	1	-
4	586936202	CARBURETTOR *CARBURETOR*	1	-

STARTER

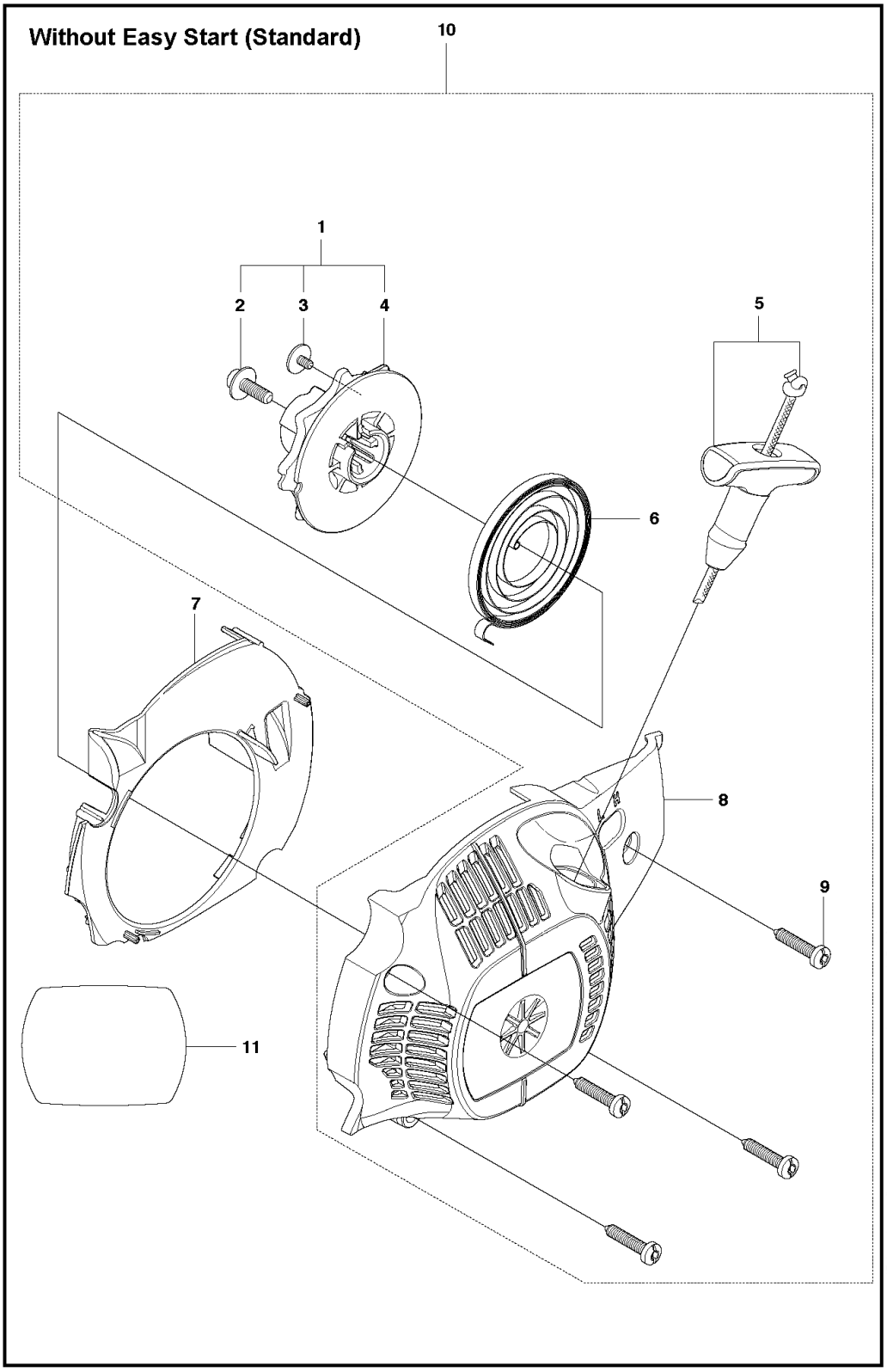

Ref.	Article N.	Description	Qty	Kit
1	587465401	WRENCH *For all EXCEPT For 967861912, 967861934, 967861936. WRENCH CHAINBRAKE RESET.*	1	-
1	587417201	WRENCH *For 967861912, 967861934, 967861936, 970515014, 970515016, 970515024*	1	-
1	586936202	CARBURETTOR	1	-

Ref.	Article N.	Description	Qty	Kit
		CARBURETOR WITH PURGE BULB		
2	577815201	THROTTLE *THROTTLE WIRE*	1	-
3	575493401	AIR FILTER *HOUSING*	1	-
4	545061801	AIR FILTER *AIR FILTER*	1	-
5	545151801	PLATE *FILTER PLATE*	1	-
6	530016101	NUT *NUT*	2	-
7	545061901	ISOLATOR *ISOLATOR FILTER HOUSING*	1	-
8	545063401	SWITCH. SPRING *SWITCH SPRING*	1	-
9	545061701	SWITCH LEVER *SWITCH LEVER*	1	-
10	545061601	CHOKE KNOB *CHOKE KNOB*	1	-
11	545061501	CARB ADAPTOR SEAL *CARB ADAPTOR SEAL*	1	-
13	577636501	ADAPTOR *ADAPTOR CARBURETOR*	1	-
15	545033701	STUD-CARBURETOR *STUD-CARBURETOR*	2	-
16	545158301	CARB ADAPTOR SCREW *CARB ADAPTOR SCREW*	4	-
17	530016080	SCREW *SCREW*	1	-
18	545074901	TOP STUD-CARBURETOR *TOP STUD-CARBURETOR*	1	-
19	545081892	GASKET KIT *GASKET KIT*	1	-
20	530016349	SCREW *SCREW*	1	-
2	530057950	PIN. DOWEL *PIN. DOWEL*	1	-
3	578936401	LINK	1	-
4	574780301	SCREW *SCREW M3.63-1.34 X 8MM TORX*	1	-
5	530016415	SPRING COMPRESSION *SPRING COMPRESSION*	1	-
6	530016110	SCREW	1	-

Ref.	Article N.	Description	Qty	Kit
		SCREW BAR ADJUSTMENT		
7	530038593	RETAINER *RETAINER BAR ADJUSTMENT*	1	-
8	530015826	PEN *PIN BAR ADJUSTING*	1	-
10	530015913	PEN *PIN BRAKE BAND*	1	-
11	530057923	BRAKE BAND *BRAKE BAND*	1	-
12	525743001	COVER *COVER CHAIN BRAKE*	1	-
13	545227101	SCREW *SCREW*	3	-
14	530015917	NUT *NUT*	2	-
15	545118701	DECAL *DECAL*	1	-
16	525628901	CHAIN BRAKE ASSY *CHAIN BRAKE ASSY*	1	-
1	530014949	CLUTCH *CLUTCH*	1	-
2	530015611	WASHER *WASHER*	1	-
3	530047061	CLUTCH DRUM ASSY *For all EXCEPT 967861902. CLUTCH DRUM ASSY SPUR 3/8 6T.*	1	-
3	530048132	CLUTCH DRUM *For 967861902. CLUTCH DRUM ASSY SPUR .325 7T.*	1	-
4	579621501	WASHER *WASHER THRUST*	1	-
5	525318401	DUST SEAL *DUST SEAL OIL PUMP*	1	-
6	530037820	WORM GEAR *PISTON*	1	-
7	581063901	OIL PUMP ASSY *OIL PUMP ASSY COMPLETE*	1	-
8	545227101	SCREW	1	-
9	545227501	BLOCK *BLOCK OIL*	1	-
10	530049477	ELBOW *ELBOW*	1	-
11	545069401	SEAL *SEAL*	1	-
12	530056533	SCREEN	1	-

Ref.	Article N.	Description	Qty	Kit
		SCREEN		
1	576543201	CYLINDER COVER ASSY *KIT CYLINDER SHIELD*	1	-
2	574320601	SCREW *SCREW M5-0.8X25*	3	-
3	545116502	DECAL *DECAL STARTING INSTRUCTIONS*	1	-
4	545165957	SIGN *DECAL WARNING*	1	-
5	579173401	KIT *KIT CHASSIS BRASS INSERTS*	1	-
1	576243901	BEARING	2	-
2	580302601	CRANKSHAFT	1	-
1	581608001	SEAL *SEAL RADIAL BEARING 12 X 36.2 X 3.7*	2	-
3	577830802	KIT *KIT CRANKSHAFT COMPLETE HARDMOUNT BEARING*	1	-
4	585621401	BEARING *BEARING 37MM OD*	2	-
1	577831102	KIT *For all EXCEPT For 967861912, 967861934, 967861936, 970515014, 970515016, 970515024. KIT PISTON AND CYLINDER HARDMOUNT BEARING.*	1	-
1	577831101	KIT *For 967861912, 967861934, 967861936, 970515014, 970515016, 970515024*	1	-
2	545081501	BOLT *BOLT CYLINDER*	4	-
3	574190901	INSERT *INSERT LEFT 38CC CYLINDER*	1	-
4	574190801	INSERT *INSERT RIGHT 38CC CYLINDER*	1	-
5	585040601	PISTON RING *For all EXCEPT For 967861912, 967861934, 967861936, 970515014, 970515016, 970515024. PISTON RING 38CC PISTON RING.*	1	-
5	530012608	PISTON RING *For 967861912, 967861934, 967861936, 970515014, 970515016, 970515024*	1	-
8	530015697	LOCKING RING *LOCKING RING*	2	-
9	503235108	SPARK PLUG *SPARK PLUG M14X1.25 RCJ7Y*	1	-
10	545081894	KIT *For 967861912, 967861934, 967861936, 970515014, 970515016, 970515024*	1	-
10	577831302	KIT	1	-

Ref.	Article N.	Description	Qty	Kit
		For all EXCEPT For 967861912, 967861934, 967861936, 970515014, 970515016, 970515024. KIT PISTON HARDMOUNT BEARING.		
1	577611901	HAND GUARD *HAND GUARD ASSY HHS*	1	-
2	545127301	BOSS *BOSS SCREW HANDGUARD*	1	-
3	545061201	REAR WHEEL *REAR WHEEL*	1	-
4	545227101	SCREW *SCREW*	1	-
5	545075401	GROMMET *GROMMET REAR WALL*	1	-
6	545071401	BAR *BAR PLATE MOUNTING*	1	-
7	545071301	CAP. SPRING HANDGUARD *CAP. SPRING HANDGUARD*	1	-
8	545071201	SPRING. HANDGUARD POSITION *SPRING. HANDGUARD POSITION*	1	-
11	587026801	CHASSIS *For all EXCEPT 967861912, 967861934, 967861936, 970515014, 970515016, 970515024. CHASSIS ASSEMBLY MACH. BEARING.*	1	-
11	579665204	CHASSIS *For 970515014, 970515016, 970515024, 967861912, 967861936, 967861934*	1	-
13	529310301	BOLT *BOLT M8 X 1.25*	2	-
14	545033501	HOSE *HOSE*	1	-
15	530029868	PLUG *PLUG*	1	-
16	530026119	CHECK VALVE *CHECK VALVE DUCKBILL*	1	-
17	580727101	FUEL HOSE *FUEL HOSE KIT LP100 5.3 O.D.*	1	-
18	530023877	NIPPLE *NIPPLE FITTING - FUEL LINE*	1	-
20	545061901	ISOLATOR *ISOLATOR FILTER HOUSING*	1	-
21	544111203	TANK CAP ASSY *TANK CAP ASSY GREY*	2	-
22	530015906	SCREW *SCREW*	2	-
23	545033801	ISOLATOR *ISOLATOR ASSY FRONT*	1	-

Ref.	Article N.	Description	Qty	Kit
25	545063101	SPRING *For all EXCEPT 967861912, 967861934, 967861936, 970515014, 970515016, 970515024. SPRING REAR ISOLATOR.*	1	-
25	577540601	SPRING *For 967861912, 967861934, 967861936, 970515014, 970515016, 970515024*	1	-
26	577167201	FUEL FILTER *ASSEMBLY FUEL PICKUP PRE FLUSHED*	1	-
27	580727101	FUEL HOSE *FUEL HOSE KIT LP100 5.3 O.D.*	1	-
28	530015814	SCREW *SCREW PT 60/10-14*	1	-
29	530029850	CHAIN CATCHER *CHAIN CATCHER*	1	-
30	530038990	FELLING DOG *FELLING DOG*	1	-
31	530016439	SCREW *SCREW*	2	-
32	530014381	FELLING DOG *FELLING DOG KIT SPIKE ASSEMBLY*	1	-
33	503735801	BUSHING *For 967861912, 967861934, 967861936, 970515014, 970515016, 970515024*	1	-
33	580457501	GROMMET *For all EXCEPT 967861912, 967861934, 967861936, 970515014, 970515016, 970515024. GROMMET FUEL LINE.*	1	-
34	592969801	SPACER PLATE *SPACER PLATE*	1	-
1	545062401	FRONT HANDLE *FRONT HANDLE*	1	-
2	545062202	REAR HANDLE W/OVMLD 240E *For 967861912, 967861934, 967861936, 970515014, 970515016, 970515024*	1	-
2	545062201	REAR HANDLE *For all EXCEPT For 967861912, 967861934, 967861936, 970515014, 970515016, 970515024. REAR HANDLE NO OVERMOLD.*	1	-
3	545062302	REAR HANDLE COVER W/OVMLD 240E *For 967861912, 967861934, 967861936, 970515014, 970515016, 970515024*	1	-
3	545062301	REAR HANDLE COVER 235/235E *For all EXCEPT For 967861912, 967861934, 967861936, 970515014, 970515016, 970515024. REAR HANDLE COVER NO OVERMOLD.*	1	-
4	545062601	LOCKOUT- THROTTLE *LOCKOUT- THROTTLE*	1	-
6	578246701	TRIGGER *TRIGGER ASSEMBLY GRAY*	1	-

Ref.	Article N.	Description	Qty	Kit
7	545033901	ISOLATOR *ISOLATOR ASU FRONT ISOLATOR*	1	-
8	545076301	ISOLATION LIMITER SCREW *ISOLATION LIMITER SCREW M5.28 - 1.8 X 14.75 PL HEX M4 SPECIAL*	1	-
9	530016433	SCREW *SCREW #8-16 X 15.1 PL PAN TRX T25*	3	-
10	530016349	SCREW *SCREW*	2	-
11	530016432	SCREW *SCREW SCREW M5.38-14X22.225MM*	2	-
12	578862201	THROTTLE TRIGGER *KIT TRIGGER & LOCKOUT*	1	-
1	575635502	FLYWHEEL *FLYWHEEL ASSY*	1	-
2	530015127	WASHER *WASHER 5/16 RAMP CONICAL*	1	-
3	530016134	NUT *NUT HEX M8-1 RH GR8*	1	-
4	575803501	MODULE *MODULE*	1	-
5	545121901	SCREW *SCREW M4-0.7X16MM SEMS T20*	2	-
6	545079901	ASSY- WIRE HARNESS *ASSY- WIRE HARNESS*	1	-
1	574266401	NUT *NUT 10MM BRASS*	1	-
2	545076901	EXHAUST PLATE *EXHAUST PLATE*	1	-
3	545167401	SCREEN *SCREEN ARRESTOR GASKET*	1	-
4	530016338	BOLT *BOLT*	2	-
5	586094301	MUFFLER *MUFFLER ASSY*	1	-
6	530054884	MUFFLER GASKET *MUFFLER GASKET*	1	-
7	545066901	MUFFLER BACK PLATE *MUFFLER BACK PLATE*	1	-
8	545008027	KIT *KIT SPARK ARRESTOR*	1	-
9	545180843	MUFFLER *MUFFLER KIT COMPLETE*	1	-
1	530021179	SCREW	1	-

Ref.	Article N.	Description	Qty	Kit
		SCREW		
2	530059677	SLEEVE *SLEEVE*	1	-
3	530021180	SPRING *Spring*	1	-
4	530016080	SCREW *SCREW*	1	-
5	545058201	PULLEY *PULLEY*	1	-
6	530042095	SPRING *SPRING*	1	-
7	530071966	STARTER PULLEY *EPS STARTER KIT (INCL. PULLEY)*	1	-
8	545063801	BAFFLE *BAFFLE*	1	-
9	545063701	FAN HOUSING *FAN HOUSING*	1	-
10	545010010	HANDLE *HANDLE ROPE ASSY*	1	-
11	530016432	SCREW *SCREW SCREW M5.38-14X22.225MM*	4	-
12	545008024	KIT *KIT COMPLETE*	1	-
13	594914101	DECAL *DECAL FAN HOUSING 120 MARK II*	1	-
1	545008028	STARTER PULLEY *KIT STD STARTER*	1	-
2	530015920	SCREW *SCREW*	1	-
3	530016080	SCREW *SCREW*	1	-
4	530057890	STARTER PULLEY *STARTER PULLEY*	1	-
5	545010010	HANDLE *HANDLE ROPE ASSY*	1	-
6	545008013	SPRING CASSETTE ASSY *SPRING*	1	-
7	545063801	BAFFLE *BAFFLE*	1	-
8	545063701	FAN HOUSING *FAN HOUSING*	1	-
9	530016432	SCREW *SCREW SCREW M5.38-14X22.225MM*	4	-

Ref.	Article N.	Description	Qty	Kit
10	545008025	STARTER ASSY *KIT COMPLETE*	1	-
11	594914101	DECAL *DECAL FAN HOUSING 120 MARK II*	1	-
1	587609701	KIT *KIT CARB REPAIR*	1	-
2	573977601	KIT *CARBURETOR GASKET*	1	-
3	545008030	PURGE *PURGE AND LINE ASSEMBLY*	1	-
4	586936202	CARBURETTOR *CARBURETOR*	1	-

CARBURETOR DETAILS

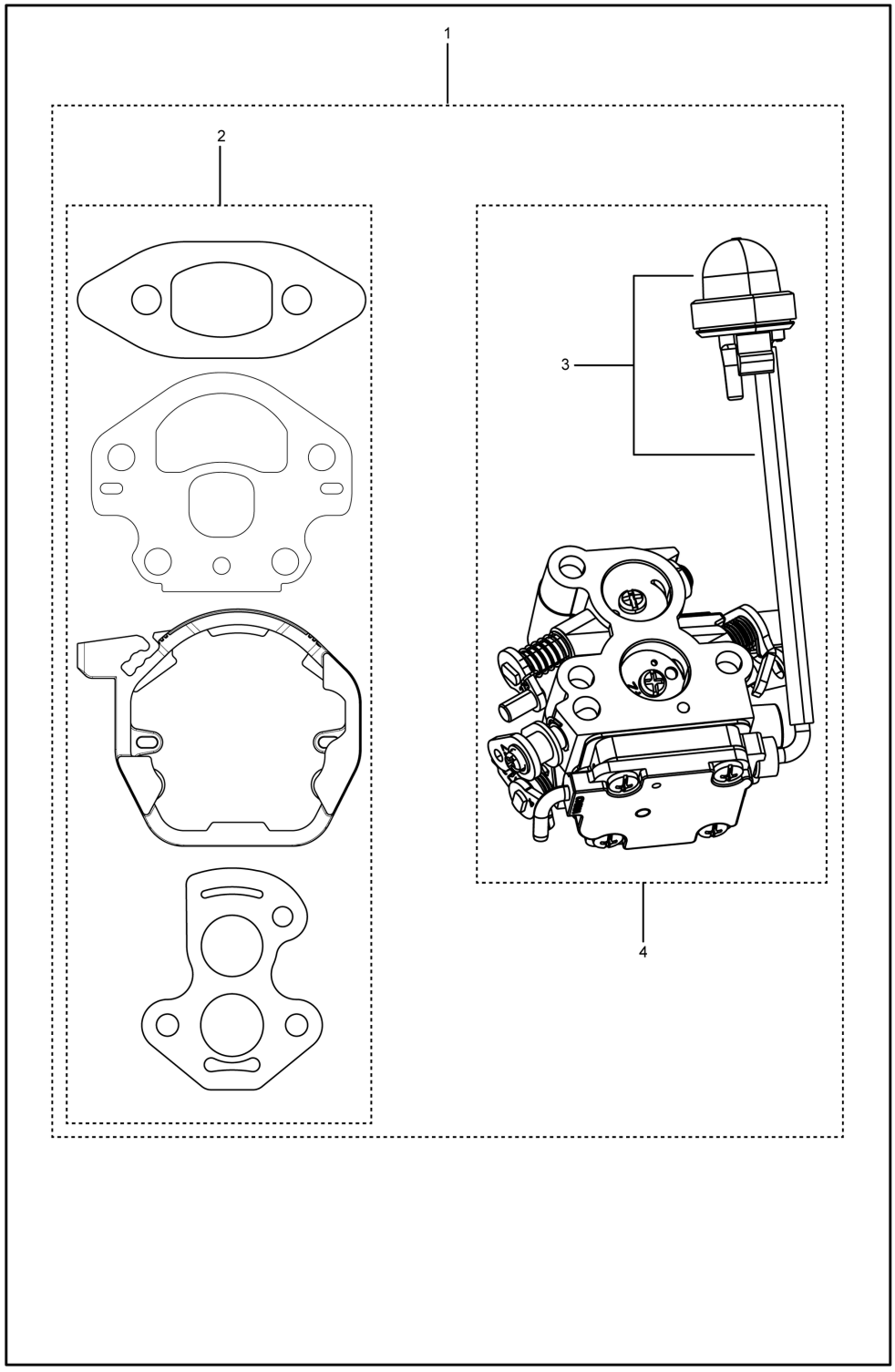

Ref.	Article N.	Description	Qty	Kit
1	587465401	WRENCH *For all EXCEPT For 967861912, 967861934, 967861936. WRENCH CHAINBRAKE RESET.*	1	-
1	587417201	WRENCH *For 967861912, 967861934, 967861936, 970515014, 970515016, 970515024*	1	-
1	586936202	CARBURETTOR	1	-

Ref.	Article N.	Description	Qty	Kit
		CARBURETOR WITH PURGE BULB		
2	577815201	THROTTLE *THROTTLE WIRE*	1	-
3	575493401	AIR FILTER *HOUSING*	1	-
4	545061801	AIR FILTER *AIR FILTER*	1	-
5	545151801	PLATE *FILTER PLATE*	1	-
6	530016101	NUT *NUT*	2	-
7	545061901	ISOLATOR *ISOLATOR FILTER HOUSING*	1	-
8	545063401	SWITCH. SPRING *SWITCH SPRING*	1	-
9	545061701	SWITCH LEVER *SWITCH LEVER*	1	-
10	545061601	CHOKE KNOB *CHOKE KNOB*	1	-
11	545061501	CARB ADAPTOR SEAL *CARB ADAPTOR SEAL*	1	-
13	577636501	ADAPTOR *ADAPTOR CARBURETOR*	1	-
15	545033701	STUD-CARBURETOR *STUD-CARBURETOR*	2	-
16	545158301	CARB ADAPTOR SCREW *CARB ADAPTOR SCREW*	4	-
17	530016080	SCREW *SCREW*	1	-
18	545074901	TOP STUD-CARBURETOR *TOP STUD-CARBURETOR*	1	-
19	545081892	GASKET KIT *GASKET KIT*	1	-
20	530016349	SCREW *SCREW*	1	-
2	530057950	PIN. DOWEL *PIN. DOWEL*	1	-
3	578936401	LINK	1	-
4	574780301	SCREW *SCREW M3.63-1.34 X 8MM TORX*	1	-
5	530016415	SPRING COMPRESSION *SPRING COMPRESSION*	1	-
6	530016110	SCREW	1	-

Ref.	Article N.	Description	Qty	Kit
		SCREW BAR ADJUSTMENT		
7	530038593	RETAINER *RETAINER BAR ADJUSTMENT*	1	-
8	530015826	PEN *PIN BAR ADJUSTING*	1	-
10	530015913	PEN *PIN BRAKE BAND*	1	-
11	530057923	BRAKE BAND *BRAKE BAND*	1	-
12	525743001	COVER *COVER CHAIN BRAKE*	1	-
13	545227101	SCREW *SCREW*	3	-
14	530015917	NUT *NUT*	2	-
15	545118701	DECAL *DECAL*	1	-
16	525628901	CHAIN BRAKE ASSY *CHAIN BRAKE ASSY*	1	-
1	530014949	CLUTCH *CLUTCH*	1	-
2	530015611	WASHER *WASHER*	1	-
3	530047061	CLUTCH DRUM ASSY *For all EXCEPT 967861902. CLUTCH DRUM ASSY SPUR 3/8 6T.*	1	-
3	530048132	CLUTCH DRUM *For 967861902. CLUTCH DRUM ASSY SPUR .325 7T.*	1	-
4	579621501	WASHER *WASHER THRUST*	1	-
5	525318401	DUST SEAL *DUST SEAL OIL PUMP*	1	-
6	530037820	WORM GEAR *PISTON*	1	-
7	581063901	OIL PUMP ASSY *OIL PUMP ASSY COMPLETE*	1	-
8	545227101	SCREW	1	-
9	545227501	BLOCK *BLOCK OIL*	1	-
10	530049477	ELBOW *ELBOW*	1	-
11	545069401	SEAL *SEAL*	1	-
12	530056533	SCREEN	1	-

Ref.	Article N.	Description	Qty	Kit
		SCREEN		
1	576543201	CYLINDER COVER ASSY *KIT CYLINDER SHIELD*	1	-
2	574320601	SCREW *SCREW M5-0.8X25*	3	-
3	545116502	DECAL *DECAL STARTING INSTRUCTIONS*	1	-
4	545165957	SIGN *DECAL WARNING*	1	-
5	579173401	KIT *KIT CHASSIS BRASS INSERTS*	1	-
1	576243901	BEARING	2	-
2	580302601	CRANKSHAFT	1	-
1	581608001	SEAL *SEAL RADIAL BEARING 12 X 36.2 X 3.7*	2	-
3	577830802	KIT *KIT CRANKSHAFT COMPLETE HARDMOUNT BEARING*	1	-
4	585621401	BEARING *BEARING 37MM OD*	2	-
1	577831102	KIT *For all EXCEPT For 967861912, 967861934, 967861936, 970515014, 970515016, 970515024. KIT PISTON AND CYLINDER HARDMOUNT BEARING.*	1	-
1	577831101	KIT *For 967861912, 967861934, 967861936, 970515014, 970515016, 970515024*	1	-
2	545081501	BOLT *BOLT CYLINDER*	4	-
3	574190901	INSERT *INSERT LEFT 38CC CYLINDER*	1	-
4	574190801	INSERT *INSERT RIGHT 38CC CYLINDER*	1	-
5	585040601	PISTON RING *For all EXCEPT For 967861912, 967861934, 967861936, 970515014, 970515016, 970515024. PISTON RING 38CC PISTON RING.*	1	-
5	530012608	PISTON RING *For 967861912, 967861934, 967861936, 970515014, 970515016, 970515024*	1	-
8	530015697	LOCKING RING *LOCKING RING*	2	-
9	503235108	SPARK PLUG *SPARK PLUG M14X1.25 RCJ7Y*	1	-
10	545081894	KIT *For 967861912, 967861934, 967861936, 970515014, 970515016, 970515024*	1	-
10	577831302	KIT	1	-

Ref.	Article N.	Description	Qty	Kit
		For all EXCEPT For 967861912, 967861934, 967861936, 970515014, 970515016, 970515024. KIT PISTON HARDMOUNT BEARING.		
1	577611901	HAND GUARD *HAND GUARD ASSY HHS*	1	-
2	545127301	BOSS *BOSS SCREW HANDGUARD*	1	-
3	545061201	REAR WHEEL *REAR WHEEL*	1	-
4	545227101	SCREW *SCREW*	1	-
5	545075401	GROMMET *GROMMET REAR WALL*	1	-
6	545071401	BAR *BAR PLATE MOUNTING*	1	-
7	545071301	CAP. SPRING HANDGUARD *CAP. SPRING HANDGUARD*	1	-
8	545071201	SPRING. HANDGUARD POSITION *SPRING. HANDGUARD POSITION*	1	-
11	587026801	CHASSIS *For all EXCEPT 967861912, 967861934, 967861936, 970515014, 970515016, 970515024. CHASSIS ASSEMBLY MACH. BEARING.*	1	-
11	579665204	CHASSIS *For 970515014, 970515016, 970515024, 967861912, 967861936, 967861934*	1	-
13	529310301	BOLT *BOLT M8 X 1.25*	2	-
14	545033501	HOSE *HOSE*	1	-
15	530029868	PLUG *PLUG*	1	-
16	530026119	CHECK VALVE *CHECK VALVE DUCKBILL*	1	-
17	580727101	FUEL HOSE *FUEL HOSE KIT LP100 5.3 O.D.*	1	-
18	530023877	NIPPLE *NIPPLE FITTING - FUEL LINE*	1	-
20	545061901	ISOLATOR *ISOLATOR FILTER HOUSING*	1	-
21	544111203	TANK CAP ASSY *TANK CAP ASSY GREY*	2	-
22	530015906	SCREW *SCREW*	2	-
23	545033801	ISOLATOR *ISOLATOR ASSY FRONT*	1	-

Ref.	Article N.	Description	Qty	Kit
25	545063101	SPRING *For all EXCEPT 967861912, 967861934, 967861936, 970515014, 970515016, 970515024. SPRING REAR ISOLATOR.*	1	-
25	577540601	SPRING *For 967861912, 967861934, 967861936, 970515014, 970515016, 970515024*	1	-
26	577167201	FUEL FILTER *ASSEMBLY FUEL PICKUP PRE FLUSHED*	1	-
27	580727101	FUEL HOSE *FUEL HOSE KIT LP100 5.3 O.D.*	1	-
28	530015814	SCREW *SCREW PT 60/10-14*	1	-
29	530029850	CHAIN CATCHER *CHAIN CATCHER*	1	-
30	530038990	FELLING DOG *FELLING DOG*	1	-
31	530016439	SCREW *SCREW*	2	-
32	530014381	FELLING DOG *FELLING DOG KIT SPIKE ASSEMBLY*	1	-
33	503735801	BUSHING *For 967861912, 967861934, 967861936, 970515014, 970515016, 970515024*	1	-
33	580457501	GROMMET *For all EXCEPT 967861912, 967861934, 967861936, 970515014, 970515016, 970515024. GROMMET FUEL LINE.*	1	-
34	592969801	SPACER PLATE *SPACER PLATE*	1	-
1	545062401	FRONT HANDLE *FRONT HANDLE*	1	-
2	545062202	REAR HANDLE W/OVMLD 240E *For 967861912, 967861934, 967861936, 970515014, 970515016, 970515024*	1	-
2	545062201	REAR HANDLE *For all EXCEPT For 967861912, 967861934, 967861936, 970515014, 970515016, 970515024. REAR HANDLE NO OVERMOLD.*	1	-
3	545062302	REAR HANDLE COVER W/OVMLD 240E *For 967861912, 967861934, 967861936, 970515014, 970515016, 970515024*	1	-
3	545062301	REAR HANDLE COVER 235/235E *For all EXCEPT For 967861912, 967861934, 967861936, 970515014, 970515016, 970515024. REAR HANDLE COVER NO OVERMOLD.*	1	-
4	545062601	LOCKOUT- THROTTLE *LOCKOUT- THROTTLE*	1	-
6	578246701	TRIGGER *TRIGGER ASSEMBLY GRAY*	1	-

Ref.	Article N.	Description	Qty	Kit
7	545033901	ISOLATOR *ISOLATOR ASU FRONT ISOLATOR*	1	-
8	545076301	ISOLATION LIMITER SCREW *ISOLATION LIMITER SCREW M5.28 - 1.8 X 14.75 PL HEX M4 SPECIAL*	1	-
9	530016433	SCREW *SCREW #8-16 X 15.1 PL PAN TRX T25*	3	-
10	530016349	SCREW *SCREW*	2	-
11	530016432	SCREW *SCREW SCREW M5.38-14X22.225MM*	2	-
12	578862201	THROTTLE TRIGGER *KIT TRIGGER & LOCKOUT*	1	-
1	575635502	FLYWHEEL *FLYWHEEL ASSY*	1	-
2	530015127	WASHER *WASHER 5/16 RAMP CONICAL*	1	-
3	530016134	NUT *NUT HEX M8-1 RH GR8*	1	-
4	575803501	MODULE *MODULE*	1	-
5	545121901	SCREW *SCREW M4-0.7X16MM SEMS T20*	2	-
6	545079901	ASSY- WIRE HARNESS *ASSY- WIRE HARNESS*	1	-
1	574266401	NUT *NUT 10MM BRASS*	1	-
2	545076901	EXHAUST PLATE *EXHAUST PLATE*	1	-
3	545167401	SCREEN *SCREEN ARRESTOR GASKET*	1	-
4	530016338	BOLT *BOLT*	2	-
5	586094301	MUFFLER *MUFFLER ASSY*	1	-
6	530054884	MUFFLER GASKET *MUFFLER GASKET*	1	-
7	545066901	MUFFLER BACK PLATE *MUFFLER BACK PLATE*	1	-
8	545008027	KIT *KIT SPARK ARRESTOR*	1	-
9	545180843	MUFFLER *MUFFLER KIT COMPLETE*	1	-
1	530021179	SCREW	1	-

Ref.	Article N.	Description	Qty	Kit
		SCREW		
2	530059677	SLEEVE *SLEEVE*	1	-
3	530021180	SPRING *Spring*	1	-
4	530016080	SCREW *SCREW*	1	-
5	545058201	PULLEY *PULLEY*	1	-
6	530042095	SPRING *SPRING*	1	-
7	530071966	STARTER PULLEY *EPS STARTER KIT (INCL. PULLEY)*	1	-
8	545063801	BAFFLE *BAFFLE*	1	-
9	545063701	FAN HOUSING *FAN HOUSING*	1	-
10	545010010	HANDLE *HANDLE ROPE ASSY*	1	-
11	530016432	SCREW *SCREW SCREW M5.38-14X22.225MM*	4	-
12	545008024	KIT *KIT COMPLETE*	1	-
13	594914101	DECAL *DECAL FAN HOUSING 120 MARK II*	1	-
1	545008028	STARTER PULLEY *KIT STD STARTER*	1	-
2	530015920	SCREW *SCREW*	1	-
3	530016080	SCREW *SCREW*	1	-
4	530057890	STARTER PULLEY *STARTER PULLEY*	1	-
5	545010010	HANDLE *HANDLE ROPE ASSY*	1	-
6	545008013	SPRING CASSETTE ASSY *SPRING*	1	-
7	545063801	BAFFLE *BAFFLE*	1	-
8	545063701	FAN HOUSING *FAN HOUSING*	1	-
9	530016432	SCREW *SCREW SCREW M5.38-14X22.225MM*	4	-

Ref.	Article N.	Description	Qty	Kit
10	545008025	STARTER ASSY *KIT COMPLETE*	1	-
11	594914101	DECAL *DECAL FAN HOUSING 120 MARK II*	1	-
1	587609701	KIT *KIT CARB REPAIR*	1	-
2	573977601	KIT *CARBURETOR GASKET*	1	-
3	545008030	PURGE *PURGE AND LINE ASSEMBLY*	1	-
4	586936202	CARBURETTOR *CARBURETOR*	1	-