Product Catalog: Husqvarna/122HD60

ACCESSORIES

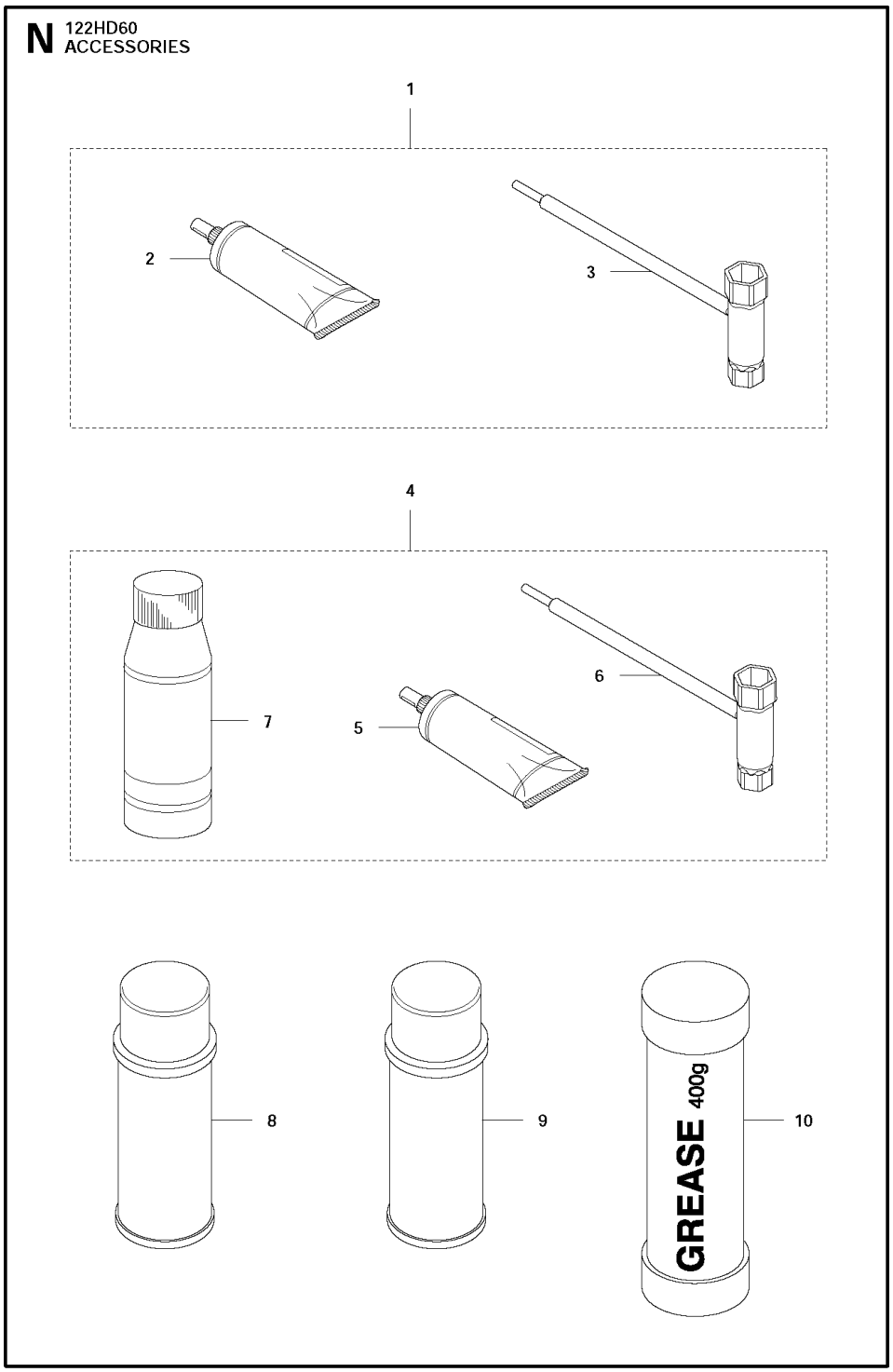

Ref.	Article N.	Description	Qty	Kit
1	577501201	ACCESSORY BAG -	1	-
2	577765601	GREASE -	1	-
3	575738201	COMBINATION WRENCH -	1	-
4	577501202	ACCESSORY BAG *US*	1	-
5	577765601	GREASE -	1	-
6	575738201	COMBINATION WRENCH -	1	-
7	530030270	OIL *OIL (BLUE CAP) XP 2*	1	-
8	544142201	GREASE *UL22*	1	-
9	544142101	GREASE *UL21*	1	-
10	588814801	GREASE *Shell Gardus*	1	-
1	576645601	DECAL	1	-
2	537213209	KNOB	1	-
3	523013101	AIR FILTER COVER	1	-
4	523013401	AIR FILTER	1	-
5	573925802	SCREW ITXSCFT	2	-
6	523012501	CHOKE	1	-
7	523012701	FILTER HOLDER ASSY	1	-
8	544105802	TUBULAR RIVET	2	-
9	544105803	TUBULAR RIVET	1	-
10	731231401	HEXAGON NUT	1	-
11	523012401	CARBURETTOR	1	-
12	525548501	GASKET	1	-
13	574444002	SCREW ITXSCT	2	-
14	576277501	BRACKET	1	-
15	525760904	SCREW ITXSCM	4	-
16	525741701	MANIFOLD	1	-
17	522911301	TUBULAR RIVET	4	-
18	522918501	GASKET	1	-
19	588986001	GASKET KIT	1	-
1	597768201	GEAR HOUSING ASSY -	1	-

Ref.	Article N.	Description	Qty	Kit
2	738210104	BALL BEARING -	2	-
3	525528101	PEN -	1	-
4	506449301	CIRCLIP -	1	-
5	578439001	CLUTCH ASSY -	1	-
6	525528401	CLUTCH DRUM ASSY -	1	-
7	544218403	SCREW ITXSCM -	3	-
8	575659901	GASKET -	1	-
9	523013601	EXHAUST PIPE ASSY -	1	-
10	525755101	SCREW ITXSCFM -	1	-
11	525528201	WEAR PLATE -	2	-
12	525528901	GEAR WHEEL SHAFT -	1	-
13	525528701	CONNECTING ROD -	2	-
14	525528801	GEAR WHEEL -	1	-
15	525529001	GASKET -	1	-
16	525528301	HUB CAP -	1	-
17	525755101	SCREW ITXSCFM -	6	-
18	575484101	PLUG -	1	-
1	577669901	CRANKCASE -	1	-
2	522878401	PIN -	2	-
3	525637301	SEALING RING -	2	-
4	735312710	CIRCLIP -	2	-
5	525825001	SCREW ITXSCM	3	-

Ref.	Article N.	Description	Qty	Kit
		-		
6	525728401	BALL BEARING -	2	-
7	525521901	GASKET -	1	-
1	577670001	CRANKSHAFT KIT -	1	-
2	575504901	NEEDLE BEARING -	1	-
3	525637301	SEALING RING -	2	-
4	525728401	BALL BEARING -	2	-
1	731711451	HEXAGON NUT FLANGE -	2	-
2	731231401	HEXAGON NUT -	8	-
3	525350802	BAR -	1	-
4	525351701	WEAR PLATE -	1	-
5	525351501	BLADE -	2	-
6	525351201	BAR -	1	-
7	525351901	SPACER -	10	-
8	525755105	SCREW ITXSCFM -	8	-
9	525352001	BRACKET -	1	-
10	525755103	SCREW ITXSCFM -	2	-
11	504088502	TRANSPORT GUARD -	1	-
1	525744701	HEAT PROTECTOR -	1	-
2	504088001	SCREW ITXSCM -	2	-
3	575434701	CYLINDER COVER ASSY -	1	-
4	575434601	THREAD BUSHING -	2	-

Ref.	Article N.	Description	Qty	Kit
1	523014203	TANK ASSY -	1	-
2	544105802	TUBULAR RIVET -	2	-
3	574603901	FUEL FILTER -	1	-
4	544325002	FUEL HOSE *300mm*	1	-
5	575553801	GROMMET -	1	-
6	574600201	HOSE *150mm*	1	-
7	590324601	TANK CAP ASSY -	1	-
8	525822001	FUEL TANK ISOLATOR -	2	-
9	525755101	SCREW ITXSCFM -	2	-
10	537184901	O-RING -	1	-
1	504089301	REAR HANDLE -	1	-
2	504089701	THROTTLE LOCKOUT -	1	-
3	504089401	THROTTLE CONTROL -	1	-
4	504089601	SPRING -	1	-
5	504089201	REAR HANDLE -	1	-
6	537419001	SWITCH -	1	-
7	574488802	SHORT CIRCUIT CABLE -	1	-
8	575572101	THROTTLE CABLE ASSY -	1	-
9	523015401	HANDLE HOLDER -	1	-
10	573925801	SCREW ITXSCFT -	6	-
11	525633501	ANTIVIBRATION ELEMENT -	4	-
12	525633701	SLEEVE	2	-

Ref.	Article N.	Description	Qty	Kit
		-		
13	734181455	WASHER -	4	-
14	544218405	SCREW ITXSCM -	2	-
15	587130002	LABEL -	1	-
16	544218403	SCREW ITXSCM -	2	-
17	525633601	ANTIVIBRATION ELEMENT -	4	-
18	525633801	SLEEVE -	2	-
19	504091201	HANDLE -	1	-
20	575232002	O-RING -	1	-
21	504089501	LOCKING BUTTON -	1	-
22	504089801	RECOIL SPRING -	1	-
1	525739501	FLYWHEEL ASSY -	1	-
2	525637101	STARTER PAWL -	2	-
3	573951501	SPRING -	2	-
4	735583000	WASHER -	2	-
5	731711651	HEXAGON NUT FLANGE -	1	-
6	590710201	SPARK PLUG -	1	-
7	525755101	SCREW ITXSCFM -	2	-
8	585074002	IGNITION MODULE -	1	-
9	501485601	CONTACT SPRING -	1	-
10	577572501	SPARK PLUG CAP -	1	-
1	523032601	MUFFLER ASSY -	1	-

Ref.	Article N.	Description	Qty	Kit
2	525741601	SPARK ARRESTER -	1	-
3	504087901	SCREW ITXSCM -	1	-
4	522997301	GASKET -	1	-
5	525755101	SCREW ITXSCFM -	2	-
1	523009201	STARTER ASSY -	1	-
2	575489501	STARTER HANDLE -	1	-
3	523009901	STARTER HOUSING -	1	-
4	575896401	SPRING -	1	-
5	574286902	STARTER ROPE -	1	-
6	523010701	STARTER PULLEY -	1	-
7	523011001	SPRING -	1	-
8	523011201	DRIVER -	1	-
9	577226103	SCREW ITXSCT -	1	-
10	504088001	SCREW ITXSCM -	4	-
11	576120802	DECAL -	1	-
1	577380301	CYLINDER -	1	-
2	510223602	PISTON ASSY -	1	-
3	737440800	CIRCLIP -	2	-
4	525577701	WASHER -	2	-
5	505155801	PISTON RING -	1	-
6	575504901	NEEDLE BEARING -	1	-
7	525825001	SCREW ITXSCM	2	-

Ref.	Article N.	Description	Qty	Kit
		-		
8	525522101	GASKET -	1	-
9	523013501	HEAT DEFLECTOR -	1	-

CARBURETOR AND AIR FILTER

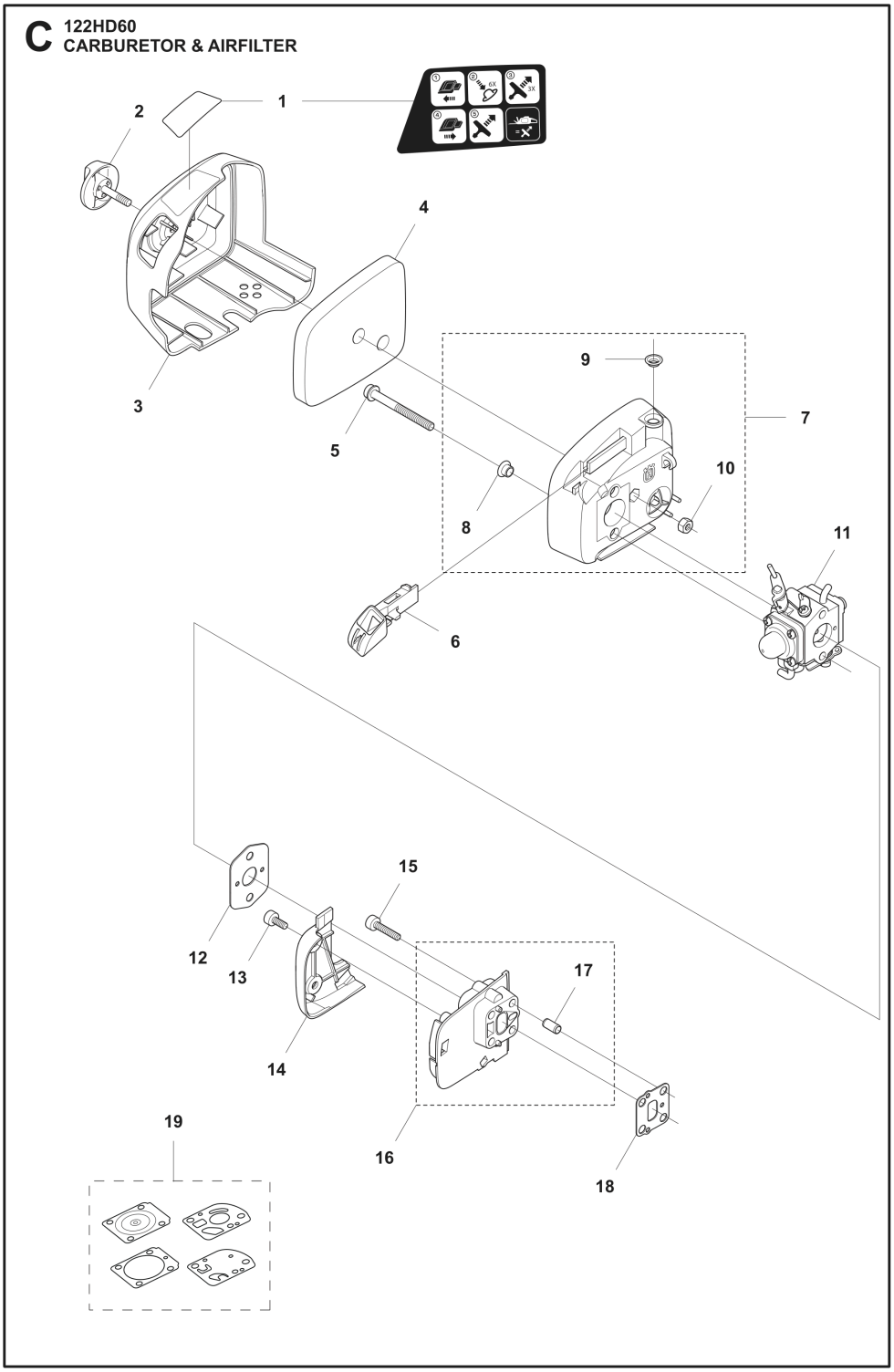

Ref.	Article N.	Description	Qty	Kit
1	577501201	ACCESSORY BAG -	1	-
2	577765601	GREASE -	1	-
3	575738201	COMBINATION WRENCH -	1	-

Ref.	Article N.	Description	Qty	Kit
4	577501202	ACCESSORY BAG *US*	1	-
5	577765601	GREASE -	1	-
6	575738201	COMBINATION WRENCH -	1	-
7	530030270	OIL *OIL (BLUE CAP) XP 2*	1	-
8	544142201	GREASE *UL22*	1	-
9	544142101	GREASE *UL21*	1	-
10	588814801	GREASE *Shell Gardus*	1	-
1	576645601	DECAL	1	-
2	537213209	KNOB	1	-
3	523013101	AIR FILTER COVER	1	-
4	523013401	AIR FILTER	1	-
5	573925802	SCREW ITXSCFT	2	-
6	523012501	CHOKE	1	-
7	523012701	FILTER HOLDER ASSY	1	-
8	544105802	TUBULAR RIVET	2	-
9	544105803	TUBULAR RIVET	1	-
10	731231401	HEXAGON NUT	1	-
11	523012401	CARBURETTOR	1	-
12	525548501	GASKET	1	-
13	574444002	SCREW ITXSCT	2	-
14	576277501	BRACKET	1	-
15	525760904	SCREW ITXSCM	4	-
16	525741701	MANIFOLD	1	-
17	522911301	TUBULAR RIVET	4	-
18	522918501	GASKET	1	-
19	588986001	GASKET KIT	1	-
1	597768201	GEAR HOUSING ASSY -	1	-
2	738210104	BALL BEARING -	2	-
3	525528101	PEN -	1	-
4	506449301	CIRCLIP -	1	-

Ref.	Article N.	Description	Qty	Kit
5	578439001	CLUTCH ASSY -	1	-
6	525528401	CLUTCH DRUM ASSY -	1	-
7	544218403	SCREW ITXSCM -	3	-
8	575659901	GASKET -	1	-
9	523013601	EXHAUST PIPE ASSY -	1	-
10	525755101	SCREW ITXSCFM -	1	-
11	525528201	WEAR PLATE -	2	-
12	525528901	GEAR WHEEL SHAFT -	1	-
13	525528701	CONNECTING ROD -	2	-
14	525528801	GEAR WHEEL -	1	-
15	525529001	GASKET -	1	-
16	525528301	HUB CAP -	1	-
17	525755101	SCREW ITXSCFM -	6	-
18	575484101	PLUG -	1	-
1	577669901	CRANKCASE -	1	-
2	522878401	PIN -	2	-
3	525637301	SEALING RING -	2	-
4	735312710	CIRCLIP -	2	-
5	525825001	SCREW ITXSCM -	3	-
6	525728401	BALL BEARING -	2	-
7	525521901	GASKET -	1	-
1	577670001	CRANKSHAFT KIT	1	-

Ref.	Article N.	Description	Qty	Kit
		-		
2	575504901	NEEDLE BEARING -	1	-
3	525637301	SEALING RING -	2	-
4	525728401	BALL BEARING -	2	-
1	731711451	HEXAGON NUT FLANGE -	2	-
2	731231401	HEXAGON NUT -	8	-
3	525350802	BAR -	1	-
4	525351701	WEAR PLATE -	1	-
5	525351501	BLADE -	2	-
6	525351201	BAR -	1	-
7	525351901	SPACER -	10	-
8	525755105	SCREW ITXSCFM -	8	-
9	525352001	BRACKET -	1	-
10	525755103	SCREW ITXSCFM -	2	-
11	504088502	TRANSPORT GUARD -	1	-
1	525744701	HEAT PROTECTOR -	1	-
2	504088001	SCREW ITXSCM -	2	-
3	575434701	CYLINDER COVER ASSY -	1	-
4	575434601	THREAD BUSHING -	2	-
1	523014203	TANK ASSY -	1	-
2	544105802	TUBULAR RIVET -	2	-
3	574603901	FUEL FILTER -	1	-

Ref.	Article N.	Description	Qty	Kit
4	544325002	FUEL HOSE *300mm*	1	-
5	575553801	GROMMET -	1	-
6	574600201	HOSE *150mm*	1	-
7	590324601	TANK CAP ASSY -	1	-
8	525822001	FUEL TANK ISOLATOR -	2	-
9	525755101	SCREW ITXSCFM -	2	-
10	537184901	O-RING -	1	-
1	504089301	REAR HANDLE -	1	-
2	504089701	THROTTLE LOCKOUT -	1	-
3	504089401	THROTTLE CONTROL -	1	-
4	504089601	SPRING -	1	-
5	504089201	REAR HANDLE -	1	-
6	537419001	SWITCH -	1	-
7	574488802	SHORT CIRCUIT CABLE -	1	-
8	575572101	THROTTLE CABLE ASSY -	1	-
9	523015401	HANDLE HOLDER -	1	-
10	573925801	SCREW ITXSCFT -	6	-
11	525633501	ANTIVIBRATION ELEMENT -	4	-
12	525633701	SLEEVE -	2	-
13	734181455	WASHER -	4	-
14	544218405	SCREW ITXSCM -	2	-
15	587130002	LABEL	1	-

Ref.	Article N.	Description	Qty	Kit
		-		
16	544218403	SCREW ITXSCM -	2	-
17	525633601	ANTIVIBRATION ELEMENT -	4	-
18	525633801	SLEEVE -	2	-
19	504091201	HANDLE -	1	-
20	575232002	O-RING -	1	-
21	504089501	LOCKING BUTTON -	1	-
22	504089801	RECOIL SPRING -	1	-
1	525739501	FLYWHEEL ASSY -	1	-
2	525637101	STARTER PAWL -	2	-
3	573951501	SPRING -	2	-
4	735583000	WASHER -	2	-
5	731711651	HEXAGON NUT FLANGE -	1	-
6	590710201	SPARK PLUG -	1	-
7	525755101	SCREW ITXSCFM -	2	-
8	585074002	IGNITION MODULE -	1	-
9	501485601	CONTACT SPRING -	1	-
10	577572501	SPARK PLUG CAP -	1	-
1	523032601	MUFFLER ASSY -	1	-
2	525741601	SPARK ARRESTER -	1	-
3	504087901	SCREW ITXSCM -	1	-
4	522997301	GASKET -	1	-

Ref.	Article N.	Description	Qty	Kit
5	525755101	SCREW ITXSCFM -	2	-
1	523009201	STARTER ASSY -	1	-
2	575489501	STARTER HANDLE -	1	-
3	523009901	STARTER HOUSING -	1	-
4	575896401	SPRING -	1	-
5	574286902	STARTER ROPE -	1	-
6	523010701	STARTER PULLEY -	1	-
7	523011001	SPRING -	1	-
8	523011201	DRIVER -	1	-
9	577226103	SCREW ITXSCT -	1	-
10	504088001	SCREW ITXSCM -	4	-
11	576120802	DECAL -	1	-
1	577380301	CYLINDER -	1	-
2	510223602	PISTON ASSY -	1	-
3	737440800	CIRCLIP -	2	-
4	525577701	WASHER -	2	-
5	505155801	PISTON RING -	1	-
6	575504901	NEEDLE BEARING -	1	-
7	525825001	SCREW ITXSCM -	2	-
8	525522101	GASKET -	1	-
9	523013501	HEAT DEFLECTOR -	1	-

CLUTCH AND GEARBOX

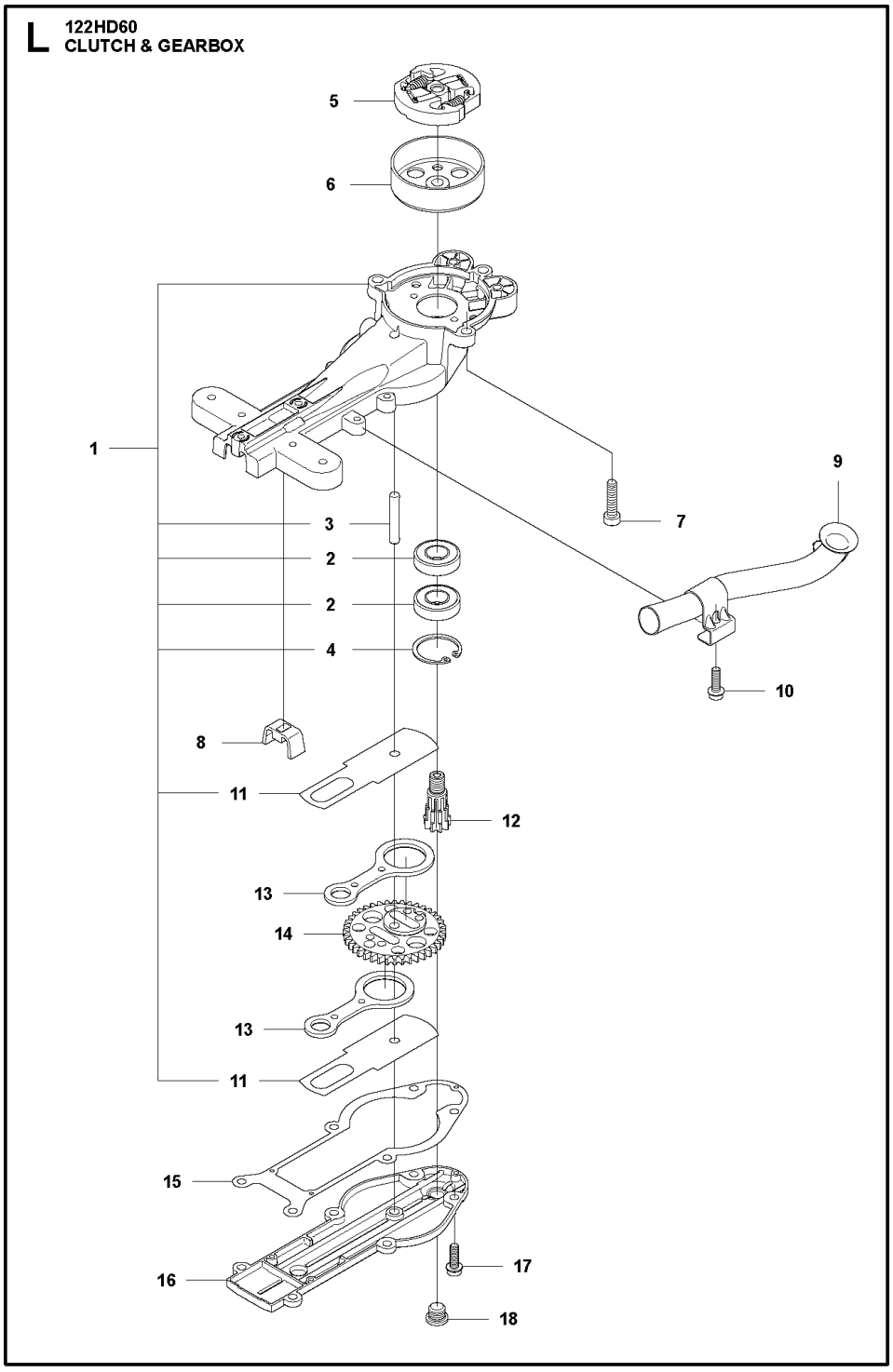

Ref.	Article N.	Description	Qty	Kit
1	577501201	ACCESSORY BAG -	1	-
2	577765601	GREASE	1	-

Ref.	Article N.	Description	Qty	Kit
		-		
3	575738201	COMBINATION WRENCH -	1	-
4	577501202	ACCESSORY BAG *US*	1	-
5	577765601	GREASE -	1	-
6	575738201	COMBINATION WRENCH -	1	-
7	530030270	OIL *OIL (BLUE CAP) XP 2*	1	-
8	544142201	GREASE *UL22*	1	-
9	544142101	GREASE *UL21*	1	-
10	588814801	GREASE *Shell Gardus*	1	-
1	576645601	DECAL	1	-
2	537213209	KNOB	1	-
3	523013101	AIR FILTER COVER	1	-
4	523013401	AIR FILTER	1	-
5	573925802	SCREW ITXSCFT	2	-
6	523012501	CHOKE	1	-
7	523012701	FILTER HOLDER ASSY	1	-
8	544105802	TUBULAR RIVET	2	-
9	544105803	TUBULAR RIVET	1	-
10	731231401	HEXAGON NUT	1	-
11	523012401	CARBURETTOR	1	-
12	525548501	GASKET	1	-
13	574444002	SCREW ITXSCT	2	-
14	576277501	BRACKET	1	-
15	525760904	SCREW ITXSCM	4	-
16	525741701	MANIFOLD	1	-
17	522911301	TUBULAR RIVET	4	-
18	522918501	GASKET	1	-
19	588986001	GASKET KIT	1	-
1	597768201	GEAR HOUSING ASSY -	1	-
2	738210104	BALL BEARING -	2	-
3	525528101	PEN	1	-

Ref.	Article N.	Description	Qty	Kit
		-		
4	506449301	CIRCLIP -	1	-
5	578439001	CLUTCH ASSY -	1	-
6	525528401	CLUTCH DRUM ASSY -	1	-
7	544218403	SCREW ITXSCM -	3	-
8	575659901	GASKET -	1	-
9	523013601	EXHAUST PIPE ASSY -	1	-
10	525755101	SCREW ITXSCFM -	1	-
11	525528201	WEAR PLATE -	2	-
12	525528901	GEAR WHEEL SHAFT -	1	-
13	525528701	CONNECTING ROD -	2	-
14	525528801	GEAR WHEEL -	1	-
15	525529001	GASKET -	1	-
16	525528301	HUB CAP -	1	-
17	525755101	SCREW ITXSCFM -	6	-
18	575484101	PLUG -	1	-
1	577669901	CRANKCASE -	1	-
2	522878401	PIN -	2	-
3	525637301	SEALING RING -	2	-
4	735312710	CIRCLIP -	2	-
5	525825001	SCREW ITXSCM -	3	-
6	525728401	BALL BEARING -	2	-

Ref.	Article N.	Description	Qty	Kit
7	525521901	GASKET -	1	-
1	577670001	CRANKSHAFT KIT -	1	-
2	575504901	NEEDLE BEARING -	1	-
3	525637301	SEALING RING -	2	-
4	525728401	BALL BEARING -	2	-
1	731711451	HEXAGON NUT FLANGE -	2	-
2	731231401	HEXAGON NUT -	8	-
3	525350802	BAR -	1	-
4	525351701	WEAR PLATE -	1	-
5	525351501	BLADE -	2	-
6	525351201	BAR -	1	-
7	525351901	SPACER -	10	-
8	525755105	SCREW ITXSCFM -	8	-
9	525352001	BRACKET -	1	-
10	525755103	SCREW ITXSCFM -	2	-
11	504088502	TRANSPORT GUARD -	1	-
1	525744701	HEAT PROTECTOR -	1	-
2	504088001	SCREW ITXSCM -	2	-
3	575434701	CYLINDER COVER ASSY -	1	-
4	575434601	THREAD BUSHING -	2	-
1	523014203	TANK ASSY -	1	-
2	544105802	TUBULAR RIVET	2	-

Ref.	Article N.	Description	Qty	Kit
		-		
3	574603901	FUEL FILTER -	1	-
4	544325002	FUEL HOSE *300mm*	1	-
5	575553801	GROMMET -	1	-
6	574600201	HOSE *150mm*	1	-
7	590324601	TANK CAP ASSY -	1	-
8	525822001	FUEL TANK ISOLATOR -	2	-
9	525755101	SCREW ITXSCFM -	2	-
10	537184901	O-RING -	1	-
1	504089301	REAR HANDLE -	1	-
2	504089701	THROTTLE LOCKOUT -	1	-
3	504089401	THROTTLE CONTROL -	1	-
4	504089601	SPRING -	1	-
5	504089201	REAR HANDLE -	1	-
6	537419001	SWITCH -	1	-
7	574488802	SHORT CIRCUIT CABLE -	1	-
8	575572101	THROTTLE CABLE ASSY -	1	-
9	523015401	HANDLE HOLDER -	1	-
10	573925801	SCREW ITXSCFT -	6	-
11	525633501	ANTIVIBRATION ELEMENT -	4	-
12	525633701	SLEEVE -	2	-
13	734181455	WASHER -	4	-

Ref.	Article N.	Description	Qty	Kit
14	544218405	SCREW ITXSCM -	2	-
15	587130002	LABEL -	1	-
16	544218403	SCREW ITXSCM -	2	-
17	525633601	ANTIVIBRATION ELEMENT -	4	-
18	525633801	SLEEVE -	2	-
19	504091201	HANDLE -	1	-
20	575232002	O-RING -	1	-
21	504089501	LOCKING BUTTON -	1	-
22	504089801	RECOIL SPRING -	1	-
1	525739501	FLYWHEEL ASSY -	1	-
2	525637101	STARTER PAWL -	2	-
3	573951501	SPRING -	2	-
4	735583000	WASHER -	2	-
5	731711651	HEXAGON NUT FLANGE -	1	-
6	590710201	SPARK PLUG -	1	-
7	525755101	SCREW ITXSCFM -	2	-
8	585074002	IGNITION MODULE -	1	-
9	501485601	CONTACT SPRING -	1	-
10	577572501	SPARK PLUG CAP -	1	-
1	523032601	MUFFLER ASSY -	1	-
2	525741601	SPARK ARRESTER -	1	-
3	504087901	SCREW ITXSCM	1	-

Ref.	Article N.	Description	Qty	Kit
		-		
4	522997301	GASKET -	1	-
5	525755101	SCREW ITXSCFM -	2	-
1	523009201	STARTER ASSY -	1	-
2	575489501	STARTER HANDLE -	1	-
3	523009901	STARTER HOUSING -	1	-
4	575896401	SPRING -	1	-
5	574286902	STARTER ROPE -	1	-
6	523010701	STARTER PULLEY -	1	-
7	523011001	SPRING -	1	-
8	523011201	DRIVER -	1	-
9	577226103	SCREW ITXSCT -	1	-
10	504088001	SCREW ITXSCM -	4	-
11	576120802	DECAL -	1	-
1	577380301	CYLINDER -	1	-
2	510223602	PISTON ASSY -	1	-
3	737440800	CIRCLIP -	2	-
4	525577701	WASHER -	2	-
5	505155801	PISTON RING -	1	-
6	575504901	NEEDLE BEARING -	1	-
7	525825001	SCREW ITXSCM -	2	-
8	525522101	GASKET -	1	-

Ref.	Article N.	Description	Qty	Kit
9	523013501	HEAT DEFLECTOR -	1	-

CRANKCASE

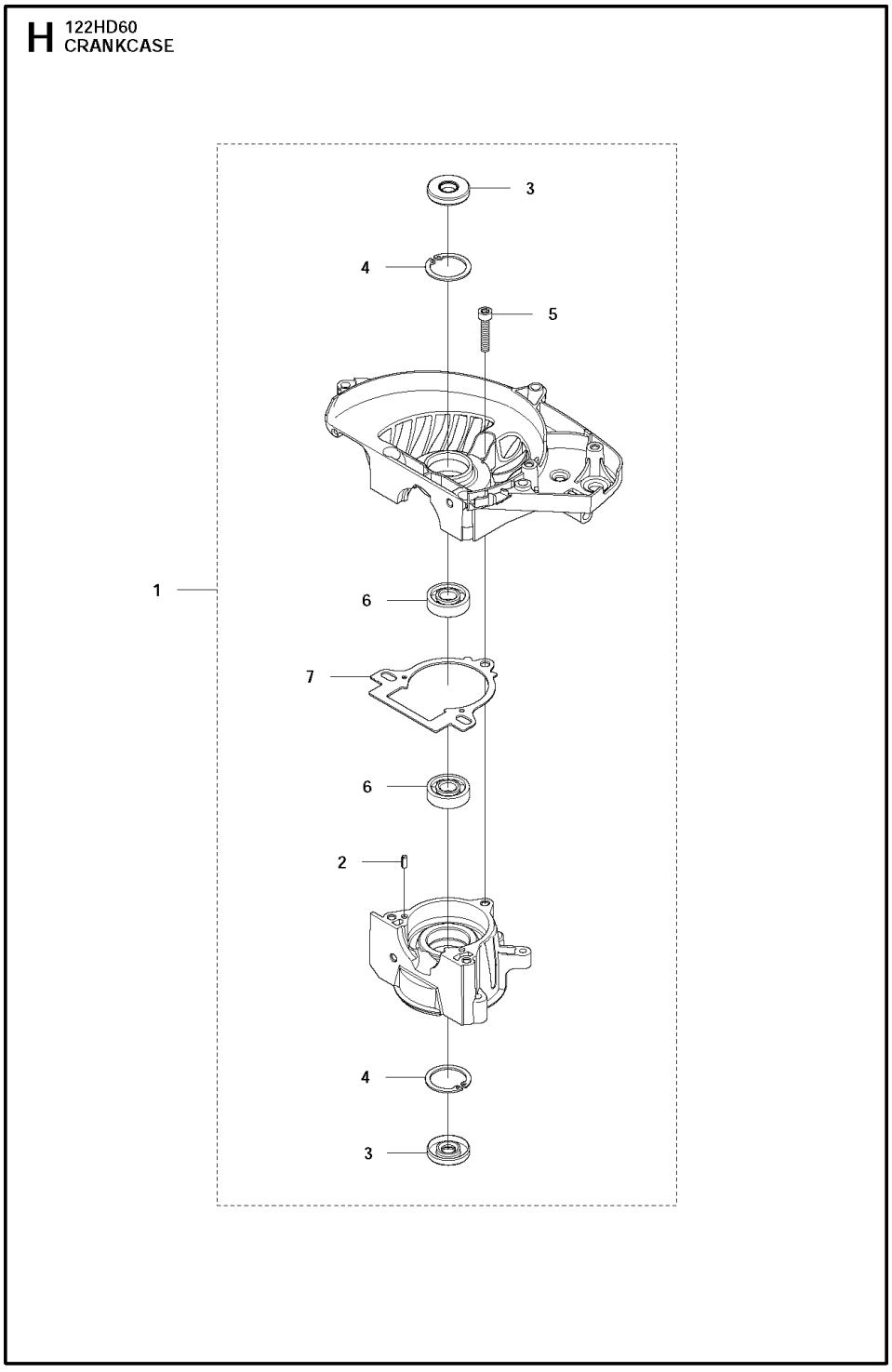

Ref.	Article N.	Description	Qty	Kit
1	577501201	ACCESSORY BAG -	1	-
2	577765601	GREASE -	1	-
3	575738201	COMBINATION WRENCH -	1	-
4	577501202	ACCESSORY BAG *US*	1	-
5	577765601	GREASE -	1	-
6	575738201	COMBINATION WRENCH -	1	-
7	530030270	OIL *OIL (BLUE CAP) XP 2*	1	-
8	544142201	GREASE *UL22*	1	-
9	544142101	GREASE *UL21*	1	-
10	588814801	GREASE *Shell Gardus*	1	-
1	576645601	DECAL	1	-
2	537213209	KNOB	1	-
3	523013101	AIR FILTER COVER	1	-
4	523013401	AIR FILTER	1	-
5	573925802	SCREW ITXSCFT	2	-
6	523012501	CHOKE	1	-
7	523012701	FILTER HOLDER ASSY	1	-
8	544105802	TUBULAR RIVET	2	-
9	544105803	TUBULAR RIVET	1	-
10	731231401	HEXAGON NUT	1	-
11	523012401	CARBURETTOR	1	-
12	525548501	GASKET	1	-
13	574444002	SCREW ITXSCT	2	-
14	576277501	BRACKET	1	-
15	525760904	SCREW ITXSCM	4	-
16	525741701	MANIFOLD	1	-
17	522911301	TUBULAR RIVET	4	-
18	522918501	GASKET	1	-
19	588986001	GASKET KIT	1	-
1	597768201	GEAR HOUSING ASSY -	1	-

Ref.	Article N.	Description	Qty	Kit
2	738210104	BALL BEARING -	2	-
3	525528101	PEN -	1	-
4	506449301	CIRCLIP -	1	-
5	578439001	CLUTCH ASSY -	1	-
6	525528401	CLUTCH DRUM ASSY -	1	-
7	544218403	SCREW ITXSCM -	3	-
8	575659901	GASKET -	1	-
9	523013601	EXHAUST PIPE ASSY -	1	-
10	525755101	SCREW ITXSCFM -	1	-
11	525528201	WEAR PLATE -	2	-
12	525528901	GEAR WHEEL SHAFT -	1	-
13	525528701	CONNECTING ROD -	2	-
14	525528801	GEAR WHEEL -	1	-
15	525529001	GASKET -	1	-
16	525528301	HUB CAP -	1	-
17	525755101	SCREW ITXSCFM -	6	-
18	575484101	PLUG -	1	-
1	577669901	CRANKCASE -	1	-
2	522878401	PIN -	2	-
3	525637301	SEALING RING -	2	-
4	735312710	CIRCLIP -	2	-
5	525825001	SCREW ITXSCM	3	-

Ref.	Article N.	Description	Qty	Kit
		-		
6	525728401	BALL BEARING -	2	-
7	525521901	GASKET -	1	-
1	577670001	CRANKSHAFT KIT -	1	-
2	575504901	NEEDLE BEARING -	1	-
3	525637301	SEALING RING -	2	-
4	525728401	BALL BEARING -	2	-
1	731711451	HEXAGON NUT FLANGE -	2	-
2	731231401	HEXAGON NUT -	8	-
3	525350802	BAR -	1	-
4	525351701	WEAR PLATE -	1	-
5	525351501	BLADE -	2	-
6	525351201	BAR -	1	-
7	525351901	SPACER -	10	-
8	525755105	SCREW ITXSCFM -	8	-
9	525352001	BRACKET -	1	-
10	525755103	SCREW ITXSCFM -	2	-
11	504088502	TRANSPORT GUARD -	1	-
1	525744701	HEAT PROTECTOR -	1	-
2	504088001	SCREW ITXSCM -	2	-
3	575434701	CYLINDER COVER ASSY -	1	-
4	575434601	THREAD BUSHING -	2	-

Ref.	Article N.	Description	Qty	Kit
1	523014203	TANK ASSY -	1	-
2	544105802	TUBULAR RIVET -	2	-
3	574603901	FUEL FILTER -	1	-
4	544325002	FUEL HOSE *300mm*	1	-
5	575553801	GROMMET -	1	-
6	574600201	HOSE *150mm*	1	-
7	590324601	TANK CAP ASSY -	1	-
8	525822001	FUEL TANK ISOLATOR -	2	-
9	525755101	SCREW ITXSCFM -	2	-
10	537184901	O-RING -	1	-
1	504089301	REAR HANDLE -	1	-
2	504089701	THROTTLE LOCKOUT -	1	-
3	504089401	THROTTLE CONTROL -	1	-
4	504089601	SPRING -	1	-
5	504089201	REAR HANDLE -	1	-
6	537419001	SWITCH -	1	-
7	574488802	SHORT CIRCUIT CABLE -	1	-
8	575572101	THROTTLE CABLE ASSY -	1	-
9	523015401	HANDLE HOLDER -	1	-
10	573925801	SCREW ITXSCFT -	6	-
11	525633501	ANTIVIBRATION ELEMENT -	4	-
12	525633701	SLEEVE	2	-

Ref.	Article N.	Description	Qty	Kit
		-		
13	734181455	WASHER -	4	-
14	544218405	SCREW ITXSCM -	2	-
15	587130002	LABEL -	1	-
16	544218403	SCREW ITXSCM -	2	-
17	525633601	ANTIVIBRATION ELEMENT -	4	-
18	525633801	SLEEVE -	2	-
19	504091201	HANDLE -	1	-
20	575232002	O-RING -	1	-
21	504089501	LOCKING BUTTON -	1	-
22	504089801	RECOIL SPRING -	1	-
1	525739501	FLYWHEEL ASSY -	1	-
2	525637101	STARTER PAWL -	2	-
3	573951501	SPRING -	2	-
4	735583000	WASHER -	2	-
5	731711651	HEXAGON NUT FLANGE -	1	-
6	590710201	SPARK PLUG -	1	-
7	525755101	SCREW ITXSCFM -	2	-
8	585074002	IGNITION MODULE -	1	-
9	501485601	CONTACT SPRING -	1	-
10	577572501	SPARK PLUG CAP -	1	-
1	523032601	MUFFLER ASSY -	1	-

Ref.	Article N.	Description	Qty	Kit
2	525741601	SPARK ARRESTER -	1	-
3	504087901	SCREW ITXSCM -	1	-
4	522997301	GASKET -	1	-
5	525755101	SCREW ITXSCFM -	2	-
1	523009201	STARTER ASSY -	1	-
2	575489501	STARTER HANDLE -	1	-
3	523009901	STARTER HOUSING -	1	-
4	575896401	SPRING -	1	-
5	574286902	STARTER ROPE -	1	-
6	523010701	STARTER PULLEY -	1	-
7	523011001	SPRING -	1	-
8	523011201	DRIVER -	1	-
9	577226103	SCREW ITXSCT -	1	-
10	504088001	SCREW ITXSCM -	4	-
11	576120802	DECAL -	1	-
1	577380301	CYLINDER -	1	-
2	510223602	PISTON ASSY -	1	-
3	737440800	CIRCLIP -	2	-
4	525577701	WASHER -	2	-
5	505155801	PISTON RING -	1	-
6	575504901	NEEDLE BEARING -	1	-
7	525825001	SCREW ITXSCM	2	-

Ref.	Article N.	Description	Qty	Kit
		-		
8	525522101	GASKET -	1	-
9	523013501	HEAT DEFLECTOR -	1	-

CRANKSHAFT

J 122HD60
CRANK SHAFT

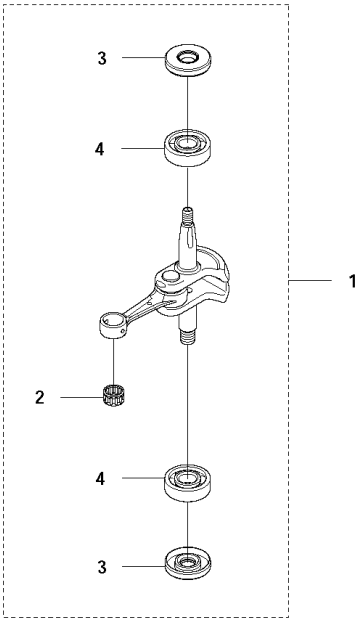

Ref.	Article N.	Description	Qty	Kit
1	577501201	ACCESSORY BAG -	1	-
2	577765601	GREASE -	1	-
3	575738201	COMBINATION WRENCH -	1	-

Ref.	Article N.	Description	Qty	Kit
4	577501202	ACCESSORY BAG *US*	1	-
5	577765601	GREASE -	1	-
6	575738201	COMBINATION WRENCH -	1	-
7	530030270	OIL *OIL (BLUE CAP) XP 2*	1	-
8	544142201	GREASE *UL22*	1	-
9	544142101	GREASE *UL21*	1	-
10	588814801	GREASE *Shell Gardus*	1	-
1	576645601	DECAL	1	-
2	537213209	KNOB	1	-
3	523013101	AIR FILTER COVER	1	-
4	523013401	AIR FILTER	1	-
5	573925802	SCREW ITXSCFT	2	-
6	523012501	CHOKE	1	-
7	523012701	FILTER HOLDER ASSY	1	-
8	544105802	TUBULAR RIVET	2	-
9	544105803	TUBULAR RIVET	1	-
10	731231401	HEXAGON NUT	1	-
11	523012401	CARBURETTOR	1	-
12	525548501	GASKET	1	-
13	574444002	SCREW ITXSCT	2	-
14	576277501	BRACKET	1	-
15	525760904	SCREW ITXSCM	4	-
16	525741701	MANIFOLD	1	-
17	522911301	TUBULAR RIVET	4	-
18	522918501	GASKET	1	-
19	588986001	GASKET KIT	1	-
1	597768201	GEAR HOUSING ASSY -	1	-
2	738210104	BALL BEARING -	2	-
3	525528101	PEN -	1	-
4	506449301	CIRCLIP -	1	-

Ref.	Article N.	Description	Qty	Kit
5	578439001	CLUTCH ASSY -	1	-
6	525528401	CLUTCH DRUM ASSY -	1	-
7	544218403	SCREW ITXSCM -	3	-
8	575659901	GASKET -	1	-
9	523013601	EXHAUST PIPE ASSY -	1	-
10	525755101	SCREW ITXSCFM -	1	-
11	525528201	WEAR PLATE -	2	-
12	525528901	GEAR WHEEL SHAFT -	1	-
13	525528701	CONNECTING ROD -	2	-
14	525528801	GEAR WHEEL -	1	-
15	525529001	GASKET -	1	-
16	525528301	HUB CAP -	1	-
17	525755101	SCREW ITXSCFM -	6	-
18	575484101	PLUG -	1	-
1	577669901	CRANKCASE -	1	-
2	522878401	PIN -	2	-
3	525637301	SEALING RING -	2	-
4	735312710	CIRCLIP -	2	-
5	525825001	SCREW ITXSCM -	3	-
6	525728401	BALL BEARING -	2	-
7	525521901	GASKET -	1	-
1	577670001	CRANKSHAFT KIT	1	-

Ref.	Article N.	Description	Qty	Kit
		-		
2	575504901	NEEDLE BEARING -	1	-
3	525637301	SEALING RING -	2	-
4	525728401	BALL BEARING -	2	-
1	731711451	HEXAGON NUT FLANGE -	2	-
2	731231401	HEXAGON NUT -	8	-
3	525350802	BAR -	1	-
4	525351701	WEAR PLATE -	1	-
5	525351501	BLADE -	2	-
6	525351201	BAR -	1	-
7	525351901	SPACER -	10	-
8	525755105	SCREW ITXSCFM -	8	-
9	525352001	BRACKET -	1	-
10	525755103	SCREW ITXSCFM -	2	-
11	504088502	TRANSPORT GUARD -	1	-
1	525744701	HEAT PROTECTOR -	1	-
2	504088001	SCREW ITXSCM -	2	-
3	575434701	CYLINDER COVER ASSY -	1	-
4	575434601	THREAD BUSHING -	2	-
1	523014203	TANK ASSY -	1	-
2	544105802	TUBULAR RIVET -	2	-
3	574603901	FUEL FILTER -	1	-

Ref.	Article N.	Description	Qty	Kit
4	544325002	FUEL HOSE *300mm*	1	-
5	575553801	GROMMET -	1	-
6	574600201	HOSE *150mm*	1	-
7	590324601	TANK CAP ASSY -	1	-
8	525822001	FUEL TANK ISOLATOR -	2	-
9	525755101	SCREW ITXSCFM -	2	-
10	537184901	O-RING -	1	-
1	504089301	REAR HANDLE -	1	-
2	504089701	THROTTLE LOCKOUT -	1	-
3	504089401	THROTTLE CONTROL -	1	-
4	504089601	SPRING -	1	-
5	504089201	REAR HANDLE -	1	-
6	537419001	SWITCH -	1	-
7	574488802	SHORT CIRCUIT CABLE -	1	-
8	575572101	THROTTLE CABLE ASSY -	1	-
9	523015401	HANDLE HOLDER -	1	-
10	573925801	SCREW ITXSCFT -	6	-
11	525633501	ANTIVIBRATION ELEMENT -	4	-
12	525633701	SLEEVE -	2	-
13	734181455	WASHER -	4	-
14	544218405	SCREW ITXSCM -	2	-
15	587130002	LABEL	1	-

Ref.	Article N.	Description	Qty	Kit
		-		
16	544218403	SCREW ITXSCM -	2	-
17	525633601	ANTIVIBRATION ELEMENT -	4	-
18	525633801	SLEEVE -	2	-
19	504091201	HANDLE -	1	-
20	575232002	O-RING -	1	-
21	504089501	LOCKING BUTTON -	1	-
22	504089801	RECOIL SPRING -	1	-
1	525739501	FLYWHEEL ASSY -	1	-
2	525637101	STARTER PAWL -	2	-
3	573951501	SPRING -	2	-
4	735583000	WASHER -	2	-
5	731711651	HEXAGON NUT FLANGE -	1	-
6	590710201	SPARK PLUG -	1	-
7	525755101	SCREW ITXSCFM -	2	-
8	585074002	IGNITION MODULE -	1	-
9	501485601	CONTACT SPRING -	1	-
10	577572501	SPARK PLUG CAP -	1	-
1	523032601	MUFFLER ASSY -	1	-
2	525741601	SPARK ARRESTER -	1	-
3	504087901	SCREW ITXSCM -	1	-
4	522997301	GASKET -	1	-

Ref.	Article N.	Description	Qty	Kit
5	525755101	SCREW ITXSCFM -	2	-
1	523009201	STARTER ASSY -	1	-
2	575489501	STARTER HANDLE -	1	-
3	523009901	STARTER HOUSING -	1	-
4	575896401	SPRING -	1	-
5	574286902	STARTER ROPE -	1	-
6	523010701	STARTER PULLEY -	1	-
7	523011001	SPRING -	1	-
8	523011201	DRIVER -	1	-
9	577226103	SCREW ITXSCT -	1	-
10	504088001	SCREW ITXSCM -	4	-
11	576120802	DECAL -	1	-
1	577380301	CYLINDER -	1	-
2	510223602	PISTON ASSY -	1	-
3	737440800	CIRCLIP -	2	-
4	525577701	WASHER -	2	-
5	505155801	PISTON RING -	1	-
6	575504901	NEEDLE BEARING -	1	-
7	525825001	SCREW ITXSCM -	2	-
8	525522101	GASKET -	1	-
9	523013501	HEAT DEFLECTOR -	1	-

CUTTING EQUIPMENT

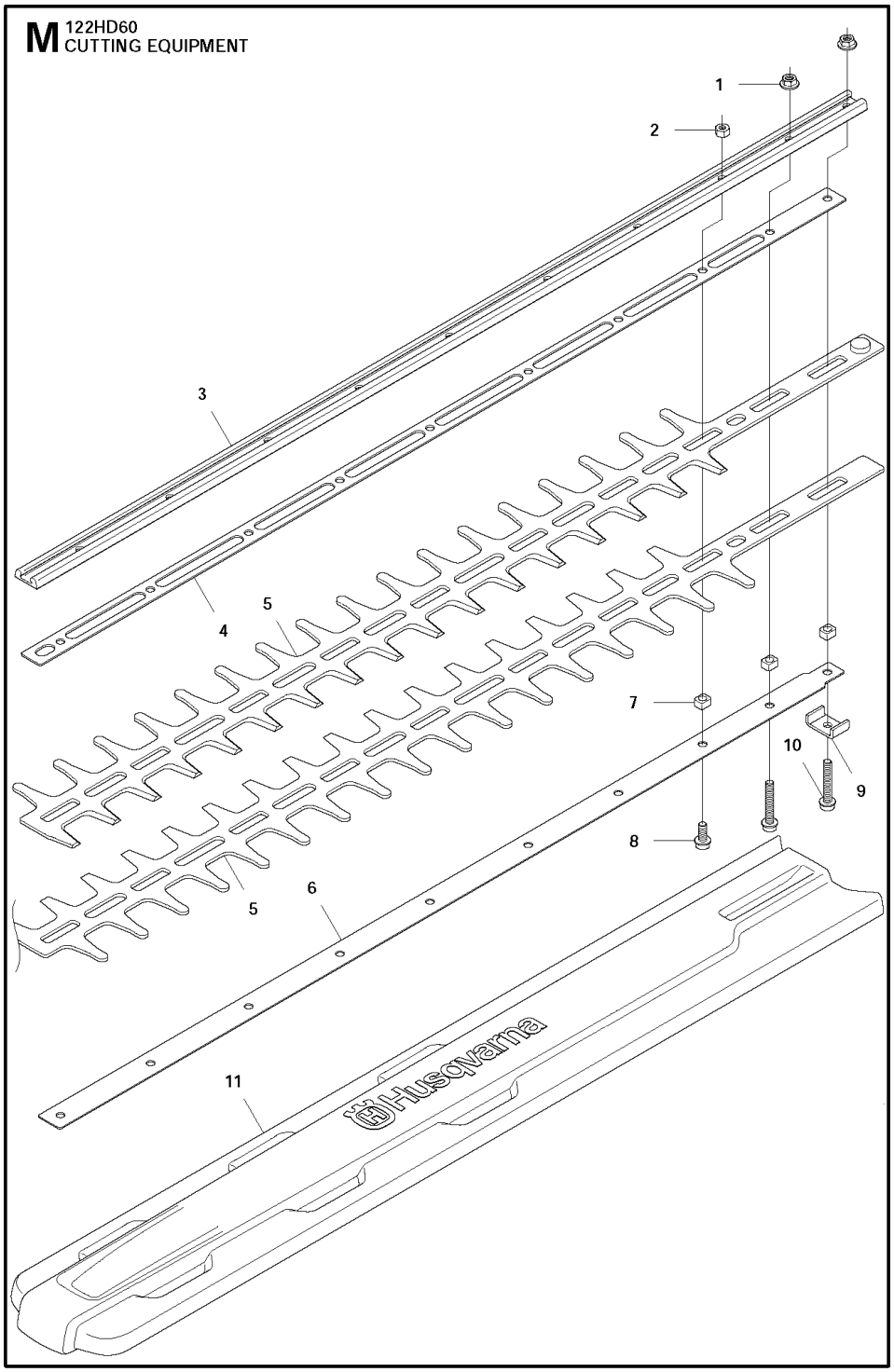

Ref.	Article N.	Description	Qty	Kit
1	577501201	ACCESSORY BAG -	1	-
2	577765601	GREASE	1	-

Ref.	Article N.	Description	Qty	Kit
		-		
3	575738201	COMBINATION WRENCH -	1	-
4	577501202	ACCESSORY BAG *US*	1	-
5	577765601	GREASE -	1	-
6	575738201	COMBINATION WRENCH -	1	-
7	530030270	OIL *OIL (BLUE CAP) XP 2*	1	-
8	544142201	GREASE *UL22*	1	-
9	544142101	GREASE *UL21*	1	-
10	588814801	GREASE *Shell Gardus*	1	-
1	576645601	DECAL	1	-
2	537213209	KNOB	1	-
3	523013101	AIR FILTER COVER	1	-
4	523013401	AIR FILTER	1	-
5	573925802	SCREW ITXSCFT	2	-
6	523012501	CHOKE	1	-
7	523012701	FILTER HOLDER ASSY	1	-
8	544105802	TUBULAR RIVET	2	-
9	544105803	TUBULAR RIVET	1	-
10	731231401	HEXAGON NUT	1	-
11	523012401	CARBURETTOR	1	-
12	525548501	GASKET	1	-
13	574444002	SCREW ITXSCT	2	-
14	576277501	BRACKET	1	-
15	525760904	SCREW ITXSCM	4	-
16	525741701	MANIFOLD	1	-
17	522911301	TUBULAR RIVET	4	-
18	522918501	GASKET	1	-
19	588986001	GASKET KIT	1	-
1	597768201	GEAR HOUSING ASSY -	1	-
2	738210104	BALL BEARING -	2	-
3	525528101	PEN	1	-

Ref.	Article N.	Description	Qty	Kit
		-		
4	506449301	CIRCLIP -	1	-
5	578439001	CLUTCH ASSY -	1	-
6	525528401	CLUTCH DRUM ASSY -	1	-
7	544218403	SCREW ITXSCM -	3	-
8	575659901	GASKET -	1	-
9	523013601	EXHAUST PIPE ASSY -	1	-
10	525755101	SCREW ITXSCFM -	1	-
11	525528201	WEAR PLATE -	2	-
12	525528901	GEAR WHEEL SHAFT -	1	-
13	525528701	CONNECTING ROD -	2	-
14	525528801	GEAR WHEEL -	1	-
15	525529001	GASKET -	1	-
16	525528301	HUB CAP -	1	-
17	525755101	SCREW ITXSCFM -	6	-
18	575484101	PLUG -	1	-
1	577669901	CRANKCASE -	1	-
2	522878401	PIN -	2	-
3	525637301	SEALING RING -	2	-
4	735312710	CIRCLIP -	2	-
5	525825001	SCREW ITXSCM -	3	-
6	525728401	BALL BEARING -	2	-

Ref.	Article N.	Description	Qty	Kit
7	525521901	GASKET -	1	-
1	577670001	CRANKSHAFT KIT -	1	-
2	575504901	NEEDLE BEARING -	1	-
3	525637301	SEALING RING -	2	-
4	525728401	BALL BEARING -	2	-
1	731711451	HEXAGON NUT FLANGE -	2	-
2	731231401	HEXAGON NUT -	8	-
3	525350802	BAR -	1	-
4	525351701	WEAR PLATE -	1	-
5	525351501	BLADE -	2	-
6	525351201	BAR -	1	-
7	525351901	SPACER -	10	-
8	525755105	SCREW ITXSCFM -	8	-
9	525352001	BRACKET -	1	-
10	525755103	SCREW ITXSCFM -	2	-
11	504088502	TRANSPORT GUARD -	1	-
1	525744701	HEAT PROTECTOR -	1	-
2	504088001	SCREW ITXSCM -	2	-
3	575434701	CYLINDER COVER ASSY -	1	-
4	575434601	THREAD BUSHING -	2	-
1	523014203	TANK ASSY -	1	-
2	544105802	TUBULAR RIVET	2	-

Ref.	Article N.	Description	Qty	Kit
		-		
3	574603901	FUEL FILTER -	1	-
4	544325002	FUEL HOSE *300mm*	1	-
5	575553801	GROMMET -	1	-
6	574600201	HOSE *150mm*	1	-
7	590324601	TANK CAP ASSY -	1	-
8	525822001	FUEL TANK ISOLATOR -	2	-
9	525755101	SCREW ITXSCFM -	2	-
10	537184901	O-RING -	1	-
1	504089301	REAR HANDLE -	1	-
2	504089701	THROTTLE LOCKOUT -	1	-
3	504089401	THROTTLE CONTROL -	1	-
4	504089601	SPRING -	1	-
5	504089201	REAR HANDLE -	1	-
6	537419001	SWITCH -	1	-
7	574488802	SHORT CIRCUIT CABLE -	1	-
8	575572101	THROTTLE CABLE ASSY -	1	-
9	523015401	HANDLE HOLDER -	1	-
10	573925801	SCREW ITXSCFT -	6	-
11	525633501	ANTIVIBRATION ELEMENT -	4	-
12	525633701	SLEEVE -	2	-
13	734181455	WASHER -	4	-

Ref.	Article N.	Description	Qty	Kit
14	544218405	SCREW ITXSCM -	2	-
15	587130002	LABEL -	1	-
16	544218403	SCREW ITXSCM -	2	-
17	525633601	ANTIVIBRATION ELEMENT -	4	-
18	525633801	SLEEVE -	2	-
19	504091201	HANDLE -	1	-
20	575232002	O-RING -	1	-
21	504089501	LOCKING BUTTON -	1	-
22	504089801	RECOIL SPRING -	1	-
1	525739501	FLYWHEEL ASSY -	1	-
2	525637101	STARTER PAWL -	2	-
3	573951501	SPRING -	2	-
4	735583000	WASHER -	2	-
5	731711651	HEXAGON NUT FLANGE -	1	-
6	590710201	SPARK PLUG -	1	-
7	525755101	SCREW ITXSCFM -	2	-
8	585074002	IGNITION MODULE -	1	-
9	501485601	CONTACT SPRING -	1	-
10	577572501	SPARK PLUG CAP -	1	-
1	523032601	MUFFLER ASSY -	1	-
2	525741601	SPARK ARRESTER -	1	-
3	504087901	SCREW ITXSCM	1	-

Ref.	Article N.	Description	Qty	Kit
		-		
4	522997301	GASKET -	1	-
5	525755101	SCREW ITXSCFM -	2	-
1	523009201	STARTER ASSY -	1	-
2	575489501	STARTER HANDLE -	1	-
3	523009901	STARTER HOUSING -	1	-
4	575896401	SPRING -	1	-
5	574286902	STARTER ROPE -	1	-
6	523010701	STARTER PULLEY -	1	-
7	523011001	SPRING -	1	-
8	523011201	DRIVER -	1	-
9	577226103	SCREW ITXSCT -	1	-
10	504088001	SCREW ITXSCM -	4	-
11	576120802	DECAL -	1	-
1	577380301	CYLINDER -	1	-
2	510223602	PISTON ASSY -	1	-
3	737440800	CIRCLIP -	2	-
4	525577701	WASHER -	2	-
5	505155801	PISTON RING -	1	-
6	575504901	NEEDLE BEARING -	1	-
7	525825001	SCREW ITXSCM -	2	-
8	525522101	GASKET -	1	-

Ref.	Article N.	Description	Qty	Kit
9	523013501	HEAT DEFLECTOR -	1	-

CYLINDER COVER

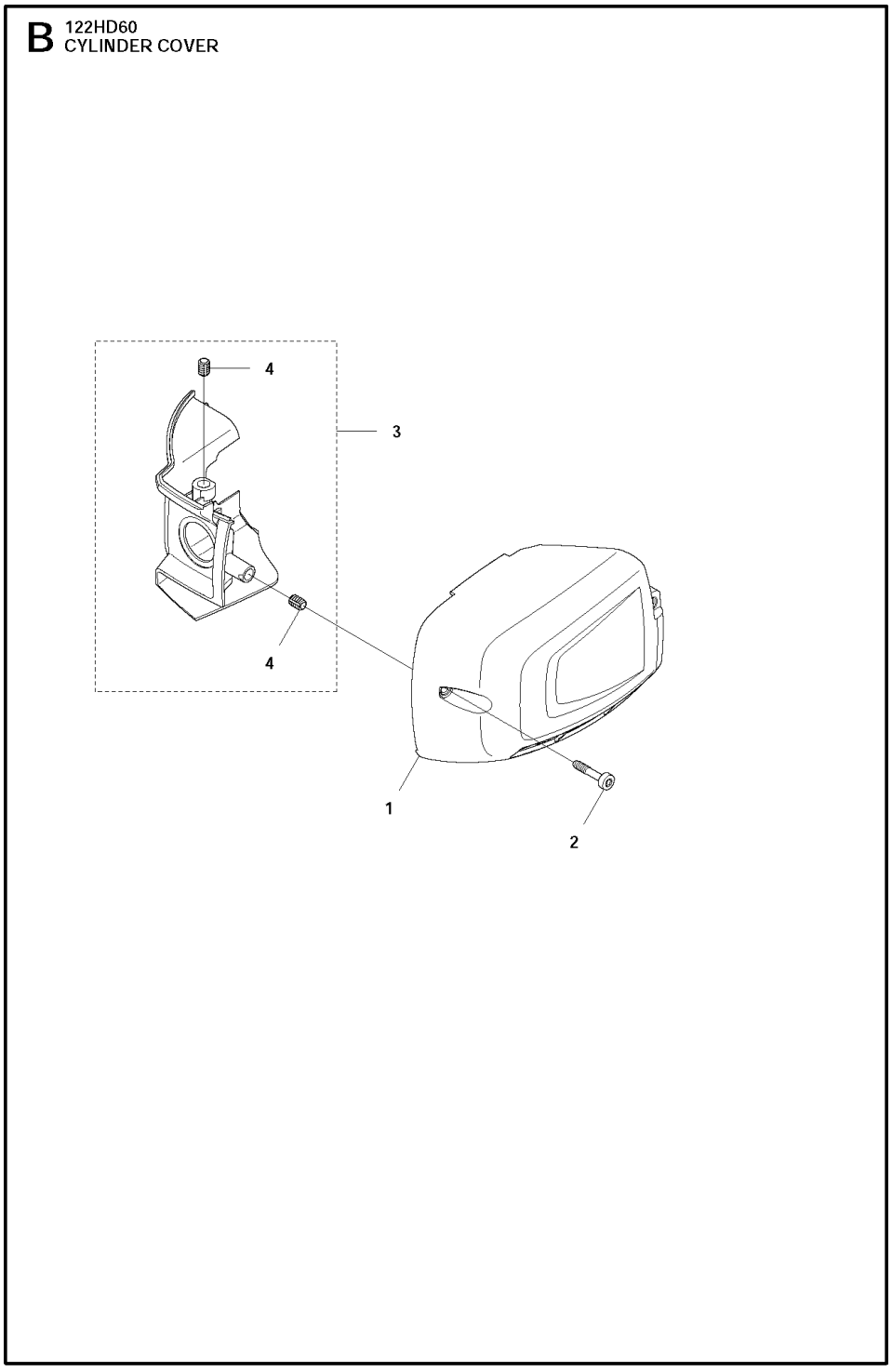

Ref.	Article N.	Description	Qty	Kit
1	577501201	ACCESSORY BAG -	1	-
2	577765601	GREASE -	1	-
3	575738201	COMBINATION WRENCH -	1	-
4	577501202	ACCESSORY BAG *US*	1	-
5	577765601	GREASE -	1	-
6	575738201	COMBINATION WRENCH -	1	-
7	530030270	OIL *OIL (BLUE CAP) XP 2*	1	-
8	544142201	GREASE *UL22*	1	-
9	544142101	GREASE *UL21*	1	-
10	588814801	GREASE *Shell Gardus*	1	-
1	576645601	DECAL	1	-
2	537213209	KNOB	1	-
3	523013101	AIR FILTER COVER	1	-
4	523013401	AIR FILTER	1	-
5	573925802	SCREW ITXSCFT	2	-
6	523012501	CHOKE	1	-
7	523012701	FILTER HOLDER ASSY	1	-
8	544105802	TUBULAR RIVET	2	-
9	544105803	TUBULAR RIVET	1	-
10	731231401	HEXAGON NUT	1	-
11	523012401	CARBURETTOR	1	-
12	525548501	GASKET	1	-
13	574444002	SCREW ITXSCT	2	-
14	576277501	BRACKET	1	-
15	525760904	SCREW ITXSCM	4	-
16	525741701	MANIFOLD	1	-
17	522911301	TUBULAR RIVET	4	-
18	522918501	GASKET	1	-
19	588986001	GASKET KIT	1	-
1	597768201	GEAR HOUSING ASSY -	1	-

Ref.	Article N.	Description	Qty	Kit
2	738210104	BALL BEARING -	2	-
3	525528101	PEN -	1	-
4	506449301	CIRCLIP -	1	-
5	578439001	CLUTCH ASSY -	1	-
6	525528401	CLUTCH DRUM ASSY -	1	-
7	544218403	SCREW ITXSCM -	3	-
8	575659901	GASKET -	1	-
9	523013601	EXHAUST PIPE ASSY -	1	-
10	525755101	SCREW ITXSCFM -	1	-
11	525528201	WEAR PLATE -	2	-
12	525528901	GEAR WHEEL SHAFT -	1	-
13	525528701	CONNECTING ROD -	2	-
14	525528801	GEAR WHEEL -	1	-
15	525529001	GASKET -	1	-
16	525528301	HUB CAP -	1	-
17	525755101	SCREW ITXSCFM -	6	-
18	575484101	PLUG -	1	-
1	577669901	CRANKCASE -	1	-
2	522878401	PIN -	2	-
3	525637301	SEALING RING -	2	-
4	735312710	CIRCLIP -	2	-
5	525825001	SCREW ITXSCM	3	-

Ref.	Article N.	Description	Qty	Kit
		-		
6	525728401	BALL BEARING -	2	-
7	525521901	GASKET -	1	-
1	577670001	CRANKSHAFT KIT -	1	-
2	575504901	NEEDLE BEARING -	1	-
3	525637301	SEALING RING -	2	-
4	525728401	BALL BEARING -	2	-
1	731711451	HEXAGON NUT FLANGE -	2	-
2	731231401	HEXAGON NUT -	8	-
3	525350802	BAR -	1	-
4	525351701	WEAR PLATE -	1	-
5	525351501	BLADE -	2	-
6	525351201	BAR -	1	-
7	525351901	SPACER -	10	-
8	525755105	SCREW ITXSCFM -	8	-
9	525352001	BRACKET -	1	-
10	525755103	SCREW ITXSCFM -	2	-
11	504088502	TRANSPORT GUARD -	1	-
1	525744701	HEAT PROTECTOR -	1	-
2	504088001	SCREW ITXSCM -	2	-
3	575434701	CYLINDER COVER ASSY -	1	-
4	575434601	THREAD BUSHING -	2	-

Ref.	Article N.	Description	Qty	Kit
1	523014203	TANK ASSY -	1	-
2	544105802	TUBULAR RIVET -	2	-
3	574603901	FUEL FILTER -	1	-
4	544325002	FUEL HOSE *300mm*	1	-
5	575553801	GROMMET -	1	-
6	574600201	HOSE *150mm*	1	-
7	590324601	TANK CAP ASSY -	1	-
8	525822001	FUEL TANK ISOLATOR -	2	-
9	525755101	SCREW ITXSCFM -	2	-
10	537184901	O-RING -	1	-
1	504089301	REAR HANDLE -	1	-
2	504089701	THROTTLE LOCKOUT -	1	-
3	504089401	THROTTLE CONTROL -	1	-
4	504089601	SPRING -	1	-
5	504089201	REAR HANDLE -	1	-
6	537419001	SWITCH -	1	-
7	574488802	SHORT CIRCUIT CABLE -	1	-
8	575572101	THROTTLE CABLE ASSY -	1	-
9	523015401	HANDLE HOLDER -	1	-
10	573925801	SCREW ITXSCFT -	6	-
11	525633501	ANTIVIBRATION ELEMENT -	4	-
12	525633701	SLEEVE	2	-

Ref.	Article N.	Description	Qty	Kit
		-		
13	734181455	WASHER -	4	-
14	544218405	SCREW ITXSCM -	2	-
15	587130002	LABEL -	1	-
16	544218403	SCREW ITXSCM -	2	-
17	525633601	ANTIVIBRATION ELEMENT -	4	-
18	525633801	SLEEVE -	2	-
19	504091201	HANDLE -	1	-
20	575232002	O-RING -	1	-
21	504089501	LOCKING BUTTON -	1	-
22	504089801	RECOIL SPRING -	1	-
1	525739501	FLYWHEEL ASSY -	1	-
2	525637101	STARTER PAWL -	2	-
3	573951501	SPRING -	2	-
4	735583000	WASHER -	2	-
5	731711651	HEXAGON NUT FLANGE -	1	-
6	590710201	SPARK PLUG -	1	-
7	525755101	SCREW ITXSCFM -	2	-
8	585074002	IGNITION MODULE -	1	-
9	501485601	CONTACT SPRING -	1	-
10	577572501	SPARK PLUG CAP -	1	-
1	523032601	MUFFLER ASSY -	1	-

Ref.	Article N.	Description	Qty	Kit
2	525741601	SPARK ARRESTER -	1	-
3	504087901	SCREW ITXSCM -	1	-
4	522997301	GASKET -	1	-
5	525755101	SCREW ITXSCFM -	2	-
1	523009201	STARTER ASSY -	1	-
2	575489501	STARTER HANDLE -	1	-
3	523009901	STARTER HOUSING -	1	-
4	575896401	SPRING -	1	-
5	574286902	STARTER ROPE -	1	-
6	523010701	STARTER PULLEY -	1	-
7	523011001	SPRING -	1	-
8	523011201	DRIVER -	1	-
9	577226103	SCREW ITXSCT -	1	-
10	504088001	SCREW ITXSCM -	4	-
11	576120802	DECAL -	1	-
1	577380301	CYLINDER -	1	-
2	510223602	PISTON ASSY -	1	-
3	737440800	CIRCLIP -	2	-
4	525577701	WASHER -	2	-
5	505155801	PISTON RING -	1	-
6	575504901	NEEDLE BEARING -	1	-
7	525825001	SCREW ITXSCM	2	-

Ref.	Article N.	Description	Qty	Kit
		-		
8	525522101	GASKET -	1	-
9	523013501	HEAT DEFLECTOR -	1	-

FUEL TANK

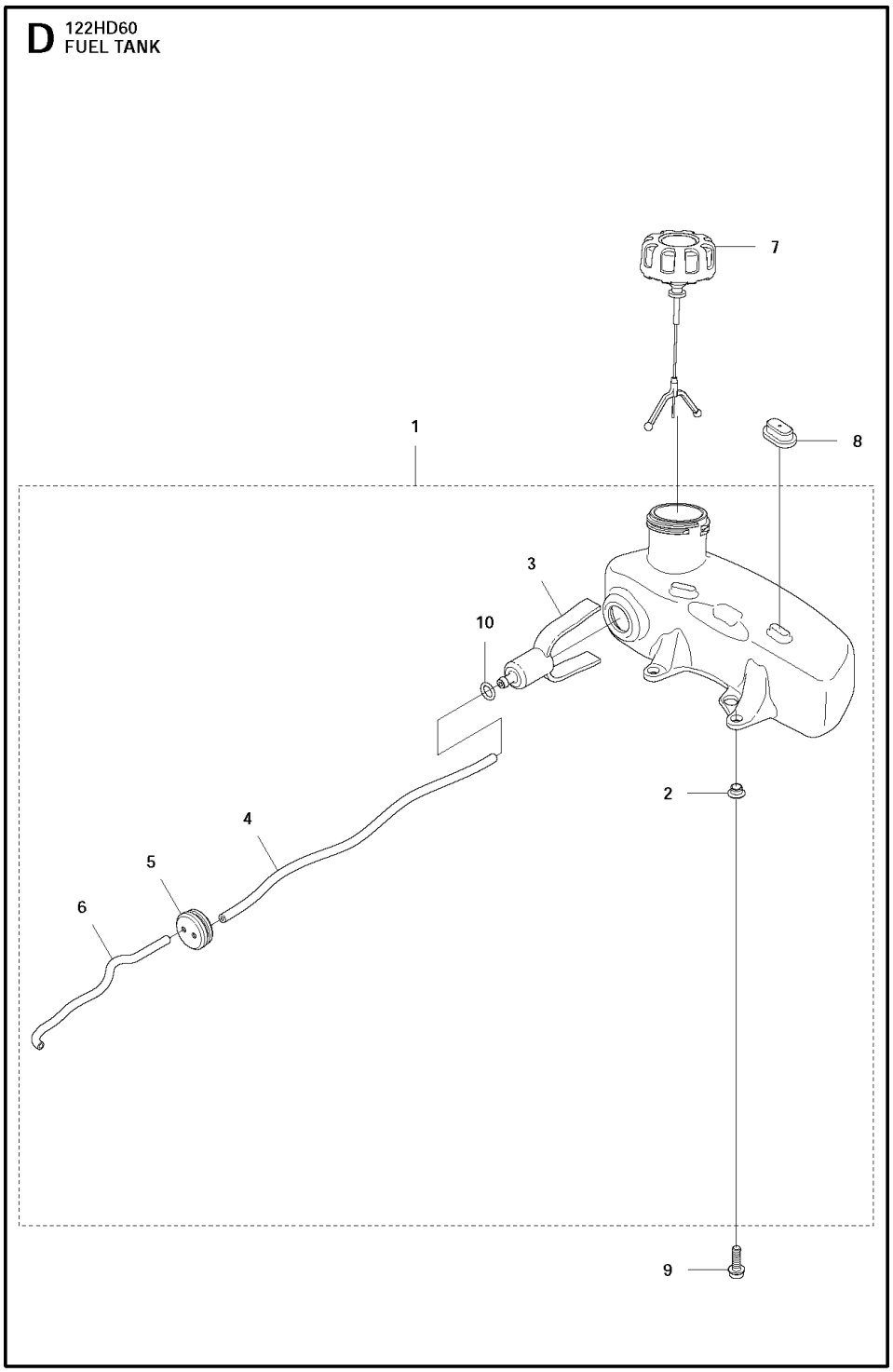

Ref.	Article N.	Description	Qty	Kit
1	577501201	ACCESSORY BAG -	1	-
2	577765601	GREASE -	1	-
3	575738201	COMBINATION WRENCH -	1	-

Ref.	Article N.	Description	Qty	Kit
4	577501202	ACCESSORY BAG *US*	1	-
5	577765601	GREASE -	1	-
6	575738201	COMBINATION WRENCH -	1	-
7	530030270	OIL *OIL (BLUE CAP) XP 2*	1	-
8	544142201	GREASE *UL22*	1	-
9	544142101	GREASE *UL21*	1	-
10	588814801	GREASE *Shell Gardus*	1	-
1	576645601	DECAL	1	-
2	537213209	KNOB	1	-
3	523013101	AIR FILTER COVER	1	-
4	523013401	AIR FILTER	1	-
5	573925802	SCREW ITXSCFT	2	-
6	523012501	CHOKE	1	-
7	523012701	FILTER HOLDER ASSY	1	-
8	544105802	TUBULAR RIVET	2	-
9	544105803	TUBULAR RIVET	1	-
10	731231401	HEXAGON NUT	1	-
11	523012401	CARBURETTOR	1	-
12	525548501	GASKET	1	-
13	574444002	SCREW ITXSCT	2	-
14	576277501	BRACKET	1	-
15	525760904	SCREW ITXSCM	4	-
16	525741701	MANIFOLD	1	-
17	522911301	TUBULAR RIVET	4	-
18	522918501	GASKET	1	-
19	588986001	GASKET KIT	1	-
1	597768201	GEAR HOUSING ASSY -	1	-
2	738210104	BALL BEARING -	2	-
3	525528101	PEN -	1	-
4	506449301	CIRCLIP -	1	-

Ref.	Article N.	Description	Qty	Kit
5	578439001	CLUTCH ASSY -	1	-
6	525528401	CLUTCH DRUM ASSY -	1	-
7	544218403	SCREW ITXSCM -	3	-
8	575659901	GASKET -	1	-
9	523013601	EXHAUST PIPE ASSY -	1	-
10	525755101	SCREW ITXSCFM -	1	-
11	525528201	WEAR PLATE -	2	-
12	525528901	GEAR WHEEL SHAFT -	1	-
13	525528701	CONNECTING ROD -	2	-
14	525528801	GEAR WHEEL -	1	-
15	525529001	GASKET -	1	-
16	525528301	HUB CAP -	1	-
17	525755101	SCREW ITXSCFM -	6	-
18	575484101	PLUG -	1	-
1	577669901	CRANKCASE -	1	-
2	522878401	PIN -	2	-
3	525637301	SEALING RING -	2	-
4	735312710	CIRCLIP -	2	-
5	525825001	SCREW ITXSCM -	3	-
6	525728401	BALL BEARING -	2	-
7	525521901	GASKET -	1	-
1	577670001	CRANKSHAFT KIT	1	-

Ref.	Article N.	Description	Qty	Kit
		-		
2	575504901	NEEDLE BEARING -	1	-
3	525637301	SEALING RING -	2	-
4	525728401	BALL BEARING -	2	-
1	731711451	HEXAGON NUT FLANGE -	2	-
2	731231401	HEXAGON NUT -	8	-
3	525350802	BAR -	1	-
4	525351701	WEAR PLATE -	1	-
5	525351501	BLADE -	2	-
6	525351201	BAR -	1	-
7	525351901	SPACER -	10	-
8	525755105	SCREW ITXSCFM -	8	-
9	525352001	BRACKET -	1	-
10	525755103	SCREW ITXSCFM -	2	-
11	504088502	TRANSPORT GUARD -	1	-
1	525744701	HEAT PROTECTOR -	1	-
2	504088001	SCREW ITXSCM -	2	-
3	575434701	CYLINDER COVER ASSY -	1	-
4	575434601	THREAD BUSHING -	2	-
1	523014203	TANK ASSY -	1	-
2	544105802	TUBULAR RIVET -	2	-
3	574603901	FUEL FILTER -	1	-

Ref.	Article N.	Description	Qty	Kit
4	544325002	FUEL HOSE *300mm*	1	-
5	575553801	GROMMET -	1	-
6	574600201	HOSE *150mm*	1	-
7	590324601	TANK CAP ASSY -	1	-
8	525822001	FUEL TANK ISOLATOR -	2	-
9	525755101	SCREW ITXSCFM -	2	-
10	537184901	O-RING -	1	-
1	504089301	REAR HANDLE -	1	-
2	504089701	THROTTLE LOCKOUT -	1	-
3	504089401	THROTTLE CONTROL -	1	-
4	504089601	SPRING -	1	-
5	504089201	REAR HANDLE -	1	-
6	537419001	SWITCH -	1	-
7	574488802	SHORT CIRCUIT CABLE -	1	-
8	575572101	THROTTLE CABLE ASSY -	1	-
9	523015401	HANDLE HOLDER -	1	-
10	573925801	SCREW ITXSCFT -	6	-
11	525633501	ANTIVIBRATION ELEMENT -	4	-
12	525633701	SLEEVE -	2	-
13	734181455	WASHER -	4	-
14	544218405	SCREW ITXSCM -	2	-
15	587130002	LABEL	1	-

Ref.	Article N.	Description	Qty	Kit
		-		
16	544218403	SCREW ITXSCM -	2	-
17	525633601	ANTIVIBRATION ELEMENT -	4	-
18	525633801	SLEEVE -	2	-
19	504091201	HANDLE -	1	-
20	575232002	O-RING -	1	-
21	504089501	LOCKING BUTTON -	1	-
22	504089801	RECOIL SPRING -	1	-
1	525739501	FLYWHEEL ASSY -	1	-
2	525637101	STARTER PAWL -	2	-
3	573951501	SPRING -	2	-
4	735583000	WASHER -	2	-
5	731711651	HEXAGON NUT FLANGE -	1	-
6	590710201	SPARK PLUG -	1	-
7	525755101	SCREW ITXSCFM -	2	-
8	585074002	IGNITION MODULE -	1	-
9	501485601	CONTACT SPRING -	1	-
10	577572501	SPARK PLUG CAP -	1	-
1	523032601	MUFFLER ASSY -	1	-
2	525741601	SPARK ARRESTER -	1	-
3	504087901	SCREW ITXSCM -	1	-
4	522997301	GASKET -	1	-

Ref.	Article N.	Description	Qty	Kit
5	525755101	SCREW ITXSCFM -	2	-
1	523009201	STARTER ASSY -	1	-
2	575489501	STARTER HANDLE -	1	-
3	523009901	STARTER HOUSING -	1	-
4	575896401	SPRING -	1	-
5	574286902	STARTER ROPE -	1	-
6	523010701	STARTER PULLEY -	1	-
7	523011001	SPRING -	1	-
8	523011201	DRIVER -	1	-
9	577226103	SCREW ITXSCT -	1	-
10	504088001	SCREW ITXSCM -	4	-
11	576120802	DECAL -	1	-
1	577380301	CYLINDER -	1	-
2	510223602	PISTON ASSY -	1	-
3	737440800	CIRCLIP -	2	-
4	525577701	WASHER -	2	-
5	505155801	PISTON RING -	1	-
6	575504901	NEEDLE BEARING -	1	-
7	525825001	SCREW ITXSCM -	2	-
8	525522101	GASKET -	1	-
9	523013501	HEAT DEFLECTOR -	1	-

HANDLE

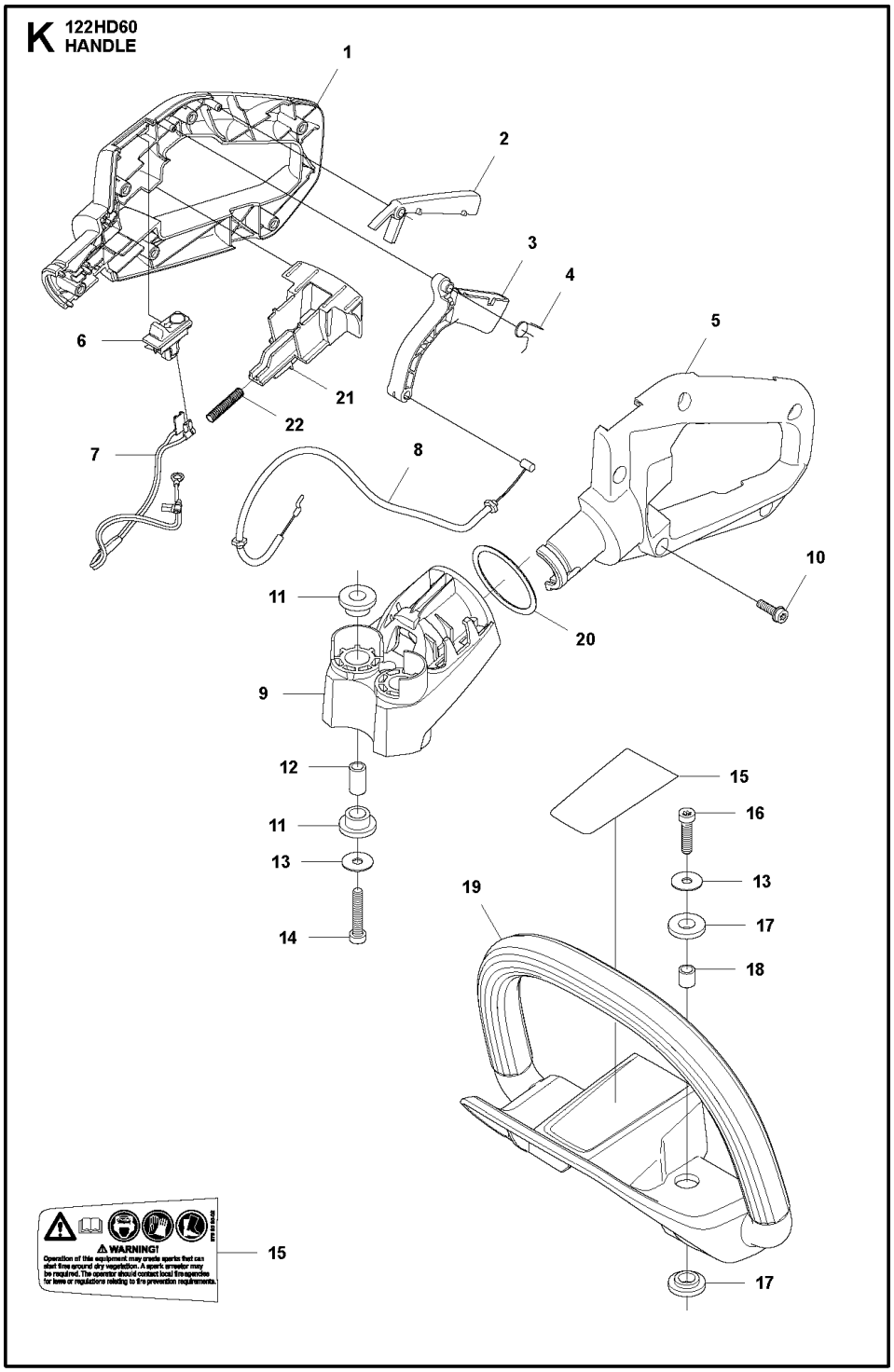

Ref.	Article N.	Description	Qty	Kit
1	577501201	ACCESSORY BAG -	1	-
2	577765601	GREASE	1	-

Ref.	Article N.	Description	Qty	Kit
		-		
3	575738201	COMBINATION WRENCH -	1	-
4	577501202	ACCESSORY BAG *US*	1	-
5	577765601	GREASE -	1	-
6	575738201	COMBINATION WRENCH -	1	-
7	530030270	OIL *OIL (BLUE CAP) XP 2*	1	-
8	544142201	GREASE *UL22*	1	-
9	544142101	GREASE *UL21*	1	-
10	588814801	GREASE *Shell Gardus*	1	-
1	576645601	DECAL	1	-
2	537213209	KNOB	1	-
3	523013101	AIR FILTER COVER	1	-
4	523013401	AIR FILTER	1	-
5	573925802	SCREW ITXSCFT	2	-
6	523012501	CHOKE	1	-
7	523012701	FILTER HOLDER ASSY	1	-
8	544105802	TUBULAR RIVET	2	-
9	544105803	TUBULAR RIVET	1	-
10	731231401	HEXAGON NUT	1	-
11	523012401	CARBURETTOR	1	-
12	525548501	GASKET	1	-
13	574444002	SCREW ITXSCT	2	-
14	576277501	BRACKET	1	-
15	525760904	SCREW ITXSCM	4	-
16	525741701	MANIFOLD	1	-
17	522911301	TUBULAR RIVET	4	-
18	522918501	GASKET	1	-
19	588986001	GASKET KIT	1	-
1	597768201	GEAR HOUSING ASSY -	1	-
2	738210104	BALL BEARING -	2	-
3	525528101	PEN	1	-

Ref.	Article N.	Description	Qty	Kit
		-		
4	506449301	CIRCLIP -	1	-
5	578439001	CLUTCH ASSY -	1	-
6	525528401	CLUTCH DRUM ASSY -	1	-
7	544218403	SCREW ITXSCM -	3	-
8	575659901	GASKET -	1	-
9	523013601	EXHAUST PIPE ASSY -	1	-
10	525755101	SCREW ITXSCFM -	1	-
11	525528201	WEAR PLATE -	2	-
12	525528901	GEAR WHEEL SHAFT -	1	-
13	525528701	CONNECTING ROD -	2	-
14	525528801	GEAR WHEEL -	1	-
15	525529001	GASKET -	1	-
16	525528301	HUB CAP -	1	-
17	525755101	SCREW ITXSCFM -	6	-
18	575484101	PLUG -	1	-
1	577669901	CRANKCASE -	1	-
2	522878401	PIN -	2	-
3	525637301	SEALING RING -	2	-
4	735312710	CIRCLIP -	2	-
5	525825001	SCREW ITXSCM -	3	-
6	525728401	BALL BEARING -	2	-

Ref.	Article N.	Description	Qty	Kit
7	525521901	GASKET -	1	-
1	577670001	CRANKSHAFT KIT -	1	-
2	575504901	NEEDLE BEARING -	1	-
3	525637301	SEALING RING -	2	-
4	525728401	BALL BEARING -	2	-
1	731711451	HEXAGON NUT FLANGE -	2	-
2	731231401	HEXAGON NUT -	8	-
3	525350802	BAR -	1	-
4	525351701	WEAR PLATE -	1	-
5	525351501	BLADE -	2	-
6	525351201	BAR -	1	-
7	525351901	SPACER -	10	-
8	525755105	SCREW ITXSCFM -	8	-
9	525352001	BRACKET -	1	-
10	525755103	SCREW ITXSCFM -	2	-
11	504088502	TRANSPORT GUARD -	1	-
1	525744701	HEAT PROTECTOR -	1	-
2	504088001	SCREW ITXSCM -	2	-
3	575434701	CYLINDER COVER ASSY -	1	-
4	575434601	THREAD BUSHING -	2	-
1	523014203	TANK ASSY -	1	-
2	544105802	TUBULAR RIVET	2	-

Ref.	Article N.	Description	Qty	Kit
		-		
3	574603901	FUEL FILTER -	1	-
4	544325002	FUEL HOSE *300mm*	1	-
5	575553801	GROMMET -	1	-
6	574600201	HOSE *150mm*	1	-
7	590324601	TANK CAP ASSY -	1	-
8	525822001	FUEL TANK ISOLATOR -	2	-
9	525755101	SCREW ITXSCFM -	2	-
10	537184901	O-RING -	1	-
1	504089301	REAR HANDLE -	1	-
2	504089701	THROTTLE LOCKOUT -	1	-
3	504089401	THROTTLE CONTROL -	1	-
4	504089601	SPRING -	1	-
5	504089201	REAR HANDLE -	1	-
6	537419001	SWITCH -	1	-
7	574488802	SHORT CIRCUIT CABLE -	1	-
8	575572101	THROTTLE CABLE ASSY -	1	-
9	523015401	HANDLE HOLDER -	1	-
10	573925801	SCREW ITXSCFT -	6	-
11	525633501	ANTIVIBRATION ELEMENT -	4	-
12	525633701	SLEEVE -	2	-
13	734181455	WASHER -	4	-

Ref.	Article N.	Description	Qty	Kit
14	544218405	SCREW ITXSCM -	2	-
15	587130002	LABEL -	1	-
16	544218403	SCREW ITXSCM -	2	-
17	525633601	ANTIVIBRATION ELEMENT -	4	-
18	525633801	SLEEVE -	2	-
19	504091201	HANDLE -	1	-
20	575232002	O-RING -	1	-
21	504089501	LOCKING BUTTON -	1	-
22	504089801	RECOIL SPRING -	1	-
1	525739501	FLYWHEEL ASSY -	1	-
2	525637101	STARTER PAWL -	2	-
3	573951501	SPRING -	2	-
4	735583000	WASHER -	2	-
5	731711651	HEXAGON NUT FLANGE -	1	-
6	590710201	SPARK PLUG -	1	-
7	525755101	SCREW ITXSCFM -	2	-
8	585074002	IGNITION MODULE -	1	-
9	501485601	CONTACT SPRING -	1	-
10	577572501	SPARK PLUG CAP -	1	-
1	523032601	MUFFLER ASSY -	1	-
2	525741601	SPARK ARRESTER -	1	-
3	504087901	SCREW ITXSCM	1	-

Ref.	Article N.	Description	Qty	Kit
		-		
4	522997301	GASKET -	1	-
5	525755101	SCREW ITXSCFM -	2	-
1	523009201	STARTER ASSY -	1	-
2	575489501	STARTER HANDLE -	1	-
3	523009901	STARTER HOUSING -	1	-
4	575896401	SPRING -	1	-
5	574286902	STARTER ROPE -	1	-
6	523010701	STARTER PULLEY -	1	-
7	523011001	SPRING -	1	-
8	523011201	DRIVER -	1	-
9	577226103	SCREW ITXSCT -	1	-
10	504088001	SCREW ITXSCM -	4	-
11	576120802	DECAL -	1	-
1	577380301	CYLINDER -	1	-
2	510223602	PISTON ASSY -	1	-
3	737440800	CIRCLIP -	2	-
4	525577701	WASHER -	2	-
5	505155801	PISTON RING -	1	-
6	575504901	NEEDLE BEARING -	1	-
7	525825001	SCREW ITXSCM -	2	-
8	525522101	GASKET -	1	-

Ref.	Article N.	Description	Qty	Kit
9	523013501	HEAT DEFLECTOR -	1	-

IGNITION SYSTEM

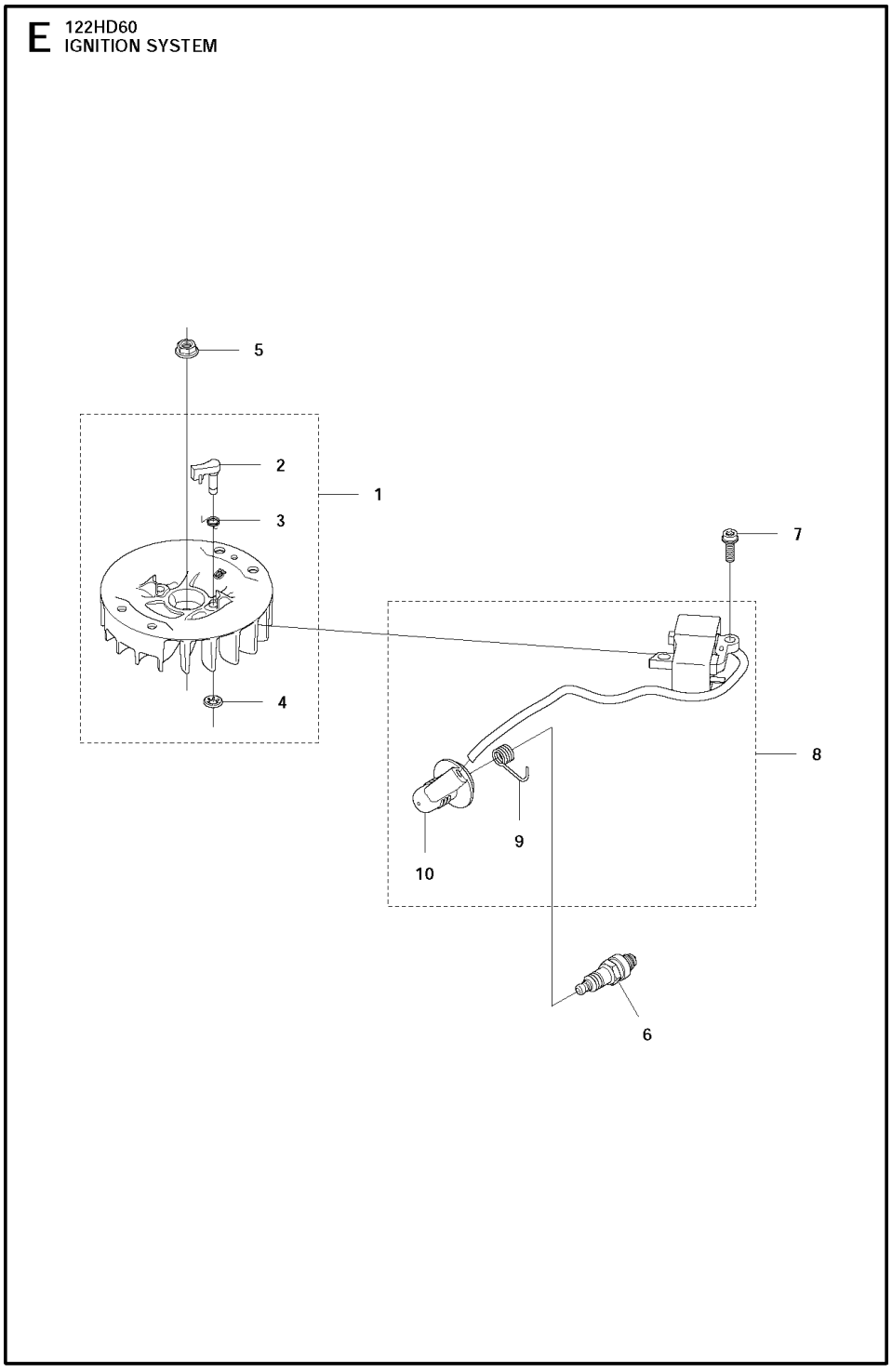

Ref.	Article N.	Description	Qty	Kit
1	577501201	ACCESSORY BAG -	1	-
2	577765601	GREASE -	1	-
3	575738201	COMBINATION WRENCH -	1	-
4	577501202	ACCESSORY BAG *US*	1	-
5	577765601	GREASE -	1	-
6	575738201	COMBINATION WRENCH -	1	-
7	530030270	OIL *OIL (BLUE CAP) XP 2*	1	-
8	544142201	GREASE *UL22*	1	-
9	544142101	GREASE *UL21*	1	-
10	588814801	GREASE *Shell Gardus*	1	-
1	576645601	DECAL	1	-
2	537213209	KNOB	1	-
3	523013101	AIR FILTER COVER	1	-
4	523013401	AIR FILTER	1	-
5	573925802	SCREW ITXSCFT	2	-
6	523012501	CHOKE	1	-
7	523012701	FILTER HOLDER ASSY	1	-
8	544105802	TUBULAR RIVET	2	-
9	544105803	TUBULAR RIVET	1	-
10	731231401	HEXAGON NUT	1	-
11	523012401	CARBURETTOR	1	-
12	525548501	GASKET	1	-
13	574444002	SCREW ITXSCT	2	-
14	576277501	BRACKET	1	-
15	525760904	SCREW ITXSCM	4	-
16	525741701	MANIFOLD	1	-
17	522911301	TUBULAR RIVET	4	-
18	522918501	GASKET	1	-
19	588986001	GASKET KIT	1	-
1	597768201	GEAR HOUSING ASSY -	1	-

Ref.	Article N.	Description	Qty	Kit
2	738210104	BALL BEARING -	2	-
3	525528101	PEN -	1	-
4	506449301	CIRCLIP -	1	-
5	578439001	CLUTCH ASSY -	1	-
6	525528401	CLUTCH DRUM ASSY -	1	-
7	544218403	SCREW ITXSCM -	3	-
8	575659901	GASKET -	1	-
9	523013601	EXHAUST PIPE ASSY -	1	-
10	525755101	SCREW ITXSCFM -	1	-
11	525528201	WEAR PLATE -	2	-
12	525528901	GEAR WHEEL SHAFT -	1	-
13	525528701	CONNECTING ROD -	2	-
14	525528801	GEAR WHEEL -	1	-
15	525529001	GASKET -	1	-
16	525528301	HUB CAP -	1	-
17	525755101	SCREW ITXSCFM -	6	-
18	575484101	PLUG -	1	-
1	577669901	CRANKCASE -	1	-
2	522878401	PIN -	2	-
3	525637301	SEALING RING -	2	-
4	735312710	CIRCLIP -	2	-
5	525825001	SCREW ITXSCM	3	-

Ref.	Article N.	Description	Qty	Kit
		-		
6	525728401	BALL BEARING -	2	-
7	525521901	GASKET -	1	-
1	577670001	CRANKSHAFT KIT -	1	-
2	575504901	NEEDLE BEARING -	1	-
3	525637301	SEALING RING -	2	-
4	525728401	BALL BEARING -	2	-
1	731711451	HEXAGON NUT FLANGE -	2	-
2	731231401	HEXAGON NUT -	8	-
3	525350802	BAR -	1	-
4	525351701	WEAR PLATE -	1	-
5	525351501	BLADE -	2	-
6	525351201	BAR -	1	-
7	525351901	SPACER -	10	-
8	525755105	SCREW ITXSCFM -	8	-
9	525352001	BRACKET -	1	-
10	525755103	SCREW ITXSCFM -	2	-
11	504088502	TRANSPORT GUARD -	1	-
1	525744701	HEAT PROTECTOR -	1	-
2	504088001	SCREW ITXSCM -	2	-
3	575434701	CYLINDER COVER ASSY -	1	-
4	575434601	THREAD BUSHING -	2	-

Ref.	Article N.	Description	Qty	Kit
1	523014203	TANK ASSY -	1	-
2	544105802	TUBULAR RIVET -	2	-
3	574603901	FUEL FILTER -	1	-
4	544325002	FUEL HOSE *300mm*	1	-
5	575553801	GROMMET -	1	-
6	574600201	HOSE *150mm*	1	-
7	590324601	TANK CAP ASSY -	1	-
8	525822001	FUEL TANK ISOLATOR -	2	-
9	525755101	SCREW ITXSCFM -	2	-
10	537184901	O-RING -	1	-
1	504089301	REAR HANDLE -	1	-
2	504089701	THROTTLE LOCKOUT -	1	-
3	504089401	THROTTLE CONTROL -	1	-
4	504089601	SPRING -	1	-
5	504089201	REAR HANDLE -	1	-
6	537419001	SWITCH -	1	-
7	574488802	SHORT CIRCUIT CABLE -	1	-
8	575572101	THROTTLE CABLE ASSY -	1	-
9	523015401	HANDLE HOLDER -	1	-
10	573925801	SCREW ITXSCFT -	6	-
11	525633501	ANTIVIBRATION ELEMENT -	4	-
12	525633701	SLEEVE	2	-

Ref.	Article N.	Description	Qty	Kit
		-		
13	734181455	WASHER -	4	-
14	544218405	SCREW ITXSCM -	2	-
15	587130002	LABEL -	1	-
16	544218403	SCREW ITXSCM -	2	-
17	525633601	ANTIVIBRATION ELEMENT -	4	-
18	525633801	SLEEVE -	2	-
19	504091201	HANDLE -	1	-
20	575232002	O-RING -	1	-
21	504089501	LOCKING BUTTON -	1	-
22	504089801	RECOIL SPRING -	1	-
1	525739501	FLYWHEEL ASSY -	1	-
2	525637101	STARTER PAWL -	2	-
3	573951501	SPRING -	2	-
4	735583000	WASHER -	2	-
5	731711651	HEXAGON NUT FLANGE -	1	-
6	590710201	SPARK PLUG -	1	-
7	525755101	SCREW ITXSCFM -	2	-
8	585074002	IGNITION MODULE -	1	-
9	501485601	CONTACT SPRING -	1	-
10	577572501	SPARK PLUG CAP -	1	-
1	523032601	MUFFLER ASSY -	1	-

Ref.	Article N.	Description	Qty	Kit
2	525741601	SPARK ARRESTER -	1	-
3	504087901	SCREW ITXSCM -	1	-
4	522997301	GASKET -	1	-
5	525755101	SCREW ITXSCFM -	2	-
1	523009201	STARTER ASSY -	1	-
2	575489501	STARTER HANDLE -	1	-
3	523009901	STARTER HOUSING -	1	-
4	575896401	SPRING -	1	-
5	574286902	STARTER ROPE -	1	-
6	523010701	STARTER PULLEY -	1	-
7	523011001	SPRING -	1	-
8	523011201	DRIVER -	1	-
9	577226103	SCREW ITXSCT -	1	-
10	504088001	SCREW ITXSCM -	4	-
11	576120802	DECAL -	1	-
1	577380301	CYLINDER -	1	-
2	510223602	PISTON ASSY -	1	-
3	737440800	CIRCLIP -	2	-
4	525577701	WASHER -	2	-
5	505155801	PISTON RING -	1	-
6	575504901	NEEDLE BEARING -	1	-
7	525825001	SCREW ITXSCM	2	-

Ref.	Article N.	Description	Qty	Kit
		-		
8	525522101	GASKET -	1	-
9	523013501	HEAT DEFLECTOR -	1	-

MUFFLER

F 122HD60
MUFFLER

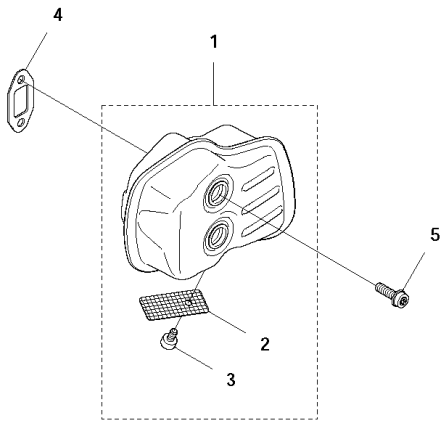

Ref.	Article N.	Description	Qty	Kit
1	577501201	ACCESSORY BAG -	1	-
2	577765601	GREASE -	1	-
3	575738201	COMBINATION WRENCH -	1	-

Ref.	Article N.	Description	Qty	Kit
4	577501202	ACCESSORY BAG *US*	1	-
5	577765601	GREASE -	1	-
6	575738201	COMBINATION WRENCH -	1	-
7	530030270	OIL *OIL (BLUE CAP) XP 2*	1	-
8	544142201	GREASE *UL22*	1	-
9	544142101	GREASE *UL21*	1	-
10	588814801	GREASE *Shell Gardus*	1	-
1	576645601	DECAL	1	-
2	537213209	KNOB	1	-
3	523013101	AIR FILTER COVER	1	-
4	523013401	AIR FILTER	1	-
5	573925802	SCREW ITXSCFT	2	-
6	523012501	CHOKE	1	-
7	523012701	FILTER HOLDER ASSY	1	-
8	544105802	TUBULAR RIVET	2	-
9	544105803	TUBULAR RIVET	1	-
10	731231401	HEXAGON NUT	1	-
11	523012401	CARBURETTOR	1	-
12	525548501	GASKET	1	-
13	574444002	SCREW ITXSCT	2	-
14	576277501	BRACKET	1	-
15	525760904	SCREW ITXSCM	4	-
16	525741701	MANIFOLD	1	-
17	522911301	TUBULAR RIVET	4	-
18	522918501	GASKET	1	-
19	588986001	GASKET KIT	1	-
1	597768201	GEAR HOUSING ASSY -	1	-
2	738210104	BALL BEARING -	2	-
3	525528101	PEN -	1	-
4	506449301	CIRCLIP -	1	-

Ref.	Article N.	Description	Qty	Kit
5	578439001	CLUTCH ASSY -	1	-
6	525528401	CLUTCH DRUM ASSY -	1	-
7	544218403	SCREW ITXSCM -	3	-
8	575659901	GASKET -	1	-
9	523013601	EXHAUST PIPE ASSY -	1	-
10	525755101	SCREW ITXSCFM -	1	-
11	525528201	WEAR PLATE -	2	-
12	525528901	GEAR WHEEL SHAFT -	1	-
13	525528701	CONNECTING ROD -	2	-
14	525528801	GEAR WHEEL -	1	-
15	525529001	GASKET -	1	-
16	525528301	HUB CAP -	1	-
17	525755101	SCREW ITXSCFM -	6	-
18	575484101	PLUG -	1	-
1	577669901	CRANKCASE -	1	-
2	522878401	PIN -	2	-
3	525637301	SEALING RING -	2	-
4	735312710	CIRCLIP -	2	-
5	525825001	SCREW ITXSCM -	3	-
6	525728401	BALL BEARING -	2	-
7	525521901	GASKET -	1	-
1	577670001	CRANKSHAFT KIT	1	-

Ref.	Article N.	Description	Qty	Kit
		-		
2	575504901	NEEDLE BEARING -	1	-
3	525637301	SEALING RING -	2	-
4	525728401	BALL BEARING -	2	-
1	731711451	HEXAGON NUT FLANGE -	2	-
2	731231401	HEXAGON NUT -	8	-
3	525350802	BAR -	1	-
4	525351701	WEAR PLATE -	1	-
5	525351501	BLADE -	2	-
6	525351201	BAR -	1	-
7	525351901	SPACER -	10	-
8	525755105	SCREW ITXSCFM -	8	-
9	525352001	BRACKET -	1	-
10	525755103	SCREW ITXSCFM -	2	-
11	504088502	TRANSPORT GUARD -	1	-
1	525744701	HEAT PROTECTOR -	1	-
2	504088001	SCREW ITXSCM -	2	-
3	575434701	CYLINDER COVER ASSY -	1	-
4	575434601	THREAD BUSHING -	2	-
1	523014203	TANK ASSY -	1	-
2	544105802	TUBULAR RIVET -	2	-
3	574603901	FUEL FILTER -	1	-

Ref.	Article N.	Description	Qty	Kit
4	544325002	FUEL HOSE *300mm*	1	-
5	575553801	GROMMET -	1	-
6	574600201	HOSE *150mm*	1	-
7	590324601	TANK CAP ASSY -	1	-
8	525822001	FUEL TANK ISOLATOR -	2	-
9	525755101	SCREW ITXSCFM -	2	-
10	537184901	O-RING -	1	-
1	504089301	REAR HANDLE -	1	-
2	504089701	THROTTLE LOCKOUT -	1	-
3	504089401	THROTTLE CONTROL -	1	-
4	504089601	SPRING -	1	-
5	504089201	REAR HANDLE -	1	-
6	537419001	SWITCH -	1	-
7	574488802	SHORT CIRCUIT CABLE -	1	-
8	575572101	THROTTLE CABLE ASSY -	1	-
9	523015401	HANDLE HOLDER -	1	-
10	573925801	SCREW ITXSCFT -	6	-
11	525633501	ANTIVIBRATION ELEMENT -	4	-
12	525633701	SLEEVE -	2	-
13	734181455	WASHER -	4	-
14	544218405	SCREW ITXSCM -	2	-
15	587130002	LABEL	1	-

Ref.	Article N.	Description	Qty	Kit
		-		
16	544218403	SCREW ITXSCM -	2	-
17	525633601	ANTIVIBRATION ELEMENT -	4	-
18	525633801	SLEEVE -	2	-
19	504091201	HANDLE -	1	-
20	575232002	O-RING -	1	-
21	504089501	LOCKING BUTTON -	1	-
22	504089801	RECOIL SPRING -	1	-
1	525739501	FLYWHEEL ASSY -	1	-
2	525637101	STARTER PAWL -	2	-
3	573951501	SPRING -	2	-
4	735583000	WASHER -	2	-
5	731711651	HEXAGON NUT FLANGE -	1	-
6	590710201	SPARK PLUG -	1	-
7	525755101	SCREW ITXSCFM -	2	-
8	585074002	IGNITION MODULE -	1	-
9	501485601	CONTACT SPRING -	1	-
10	577572501	SPARK PLUG CAP -	1	-
1	523032601	MUFFLER ASSY -	1	-
2	525741601	SPARK ARRESTER -	1	-
3	504087901	SCREW ITXSCM -	1	-
4	522997301	GASKET -	1	-

Ref.	Article N.	Description	Qty	Kit
5	525755101	SCREW ITXSCFM -	2	-
1	523009201	STARTER ASSY -	1	-
2	575489501	STARTER HANDLE -	1	-
3	523009901	STARTER HOUSING -	1	-
4	575896401	SPRING -	1	-
5	574286902	STARTER ROPE -	1	-
6	523010701	STARTER PULLEY -	1	-
7	523011001	SPRING -	1	-
8	523011201	DRIVER -	1	-
9	577226103	SCREW ITXSCT -	1	-
10	504088001	SCREW ITXSCM -	4	-
11	576120802	DECAL -	1	-
1	577380301	CYLINDER -	1	-
2	510223602	PISTON ASSY -	1	-
3	737440800	CIRCLIP -	2	-
4	525577701	WASHER -	2	-
5	505155801	PISTON RING -	1	-
6	575504901	NEEDLE BEARING -	1	-
7	525825001	SCREW ITXSCM -	2	-
8	525522101	GASKET -	1	-
9	523013501	HEAT DEFLECTOR -	1	-

STARTER

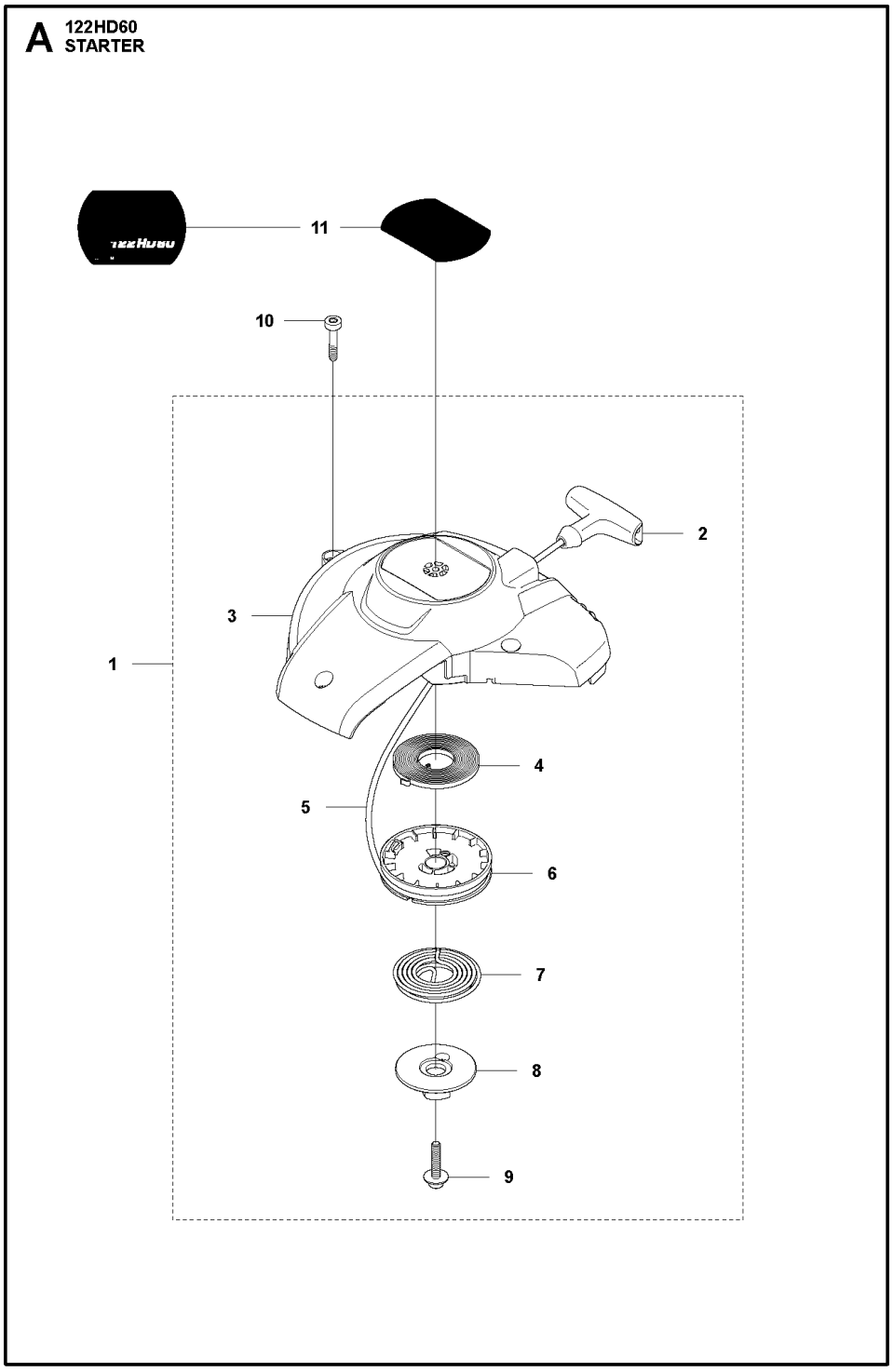

Ref.	Article N.	Description	Qty	Kit
1	577501201	ACCESSORY BAG -	1	-
2	577765601	GREASE	1	-

Ref.	Article N.	Description	Qty	Kit
		-		
3	575738201	COMBINATION WRENCH -	1	-
4	577501202	ACCESSORY BAG *US*	1	-
5	577765601	GREASE -	1	-
6	575738201	COMBINATION WRENCH -	1	-
7	530030270	OIL *OIL (BLUE CAP) XP 2*	1	-
8	544142201	GREASE *UL22*	1	-
9	544142101	GREASE *UL21*	1	-
10	588814801	GREASE *Shell Gardus*	1	-
1	576645601	DECAL	1	-
2	537213209	KNOB	1	-
3	523013101	AIR FILTER COVER	1	-
4	523013401	AIR FILTER	1	-
5	573925802	SCREW ITXSCFT	2	-
6	523012501	CHOKE	1	-
7	523012701	FILTER HOLDER ASSY	1	-
8	544105802	TUBULAR RIVET	2	-
9	544105803	TUBULAR RIVET	1	-
10	731231401	HEXAGON NUT	1	-
11	523012401	CARBURETTOR	1	-
12	525548501	GASKET	1	-
13	574444002	SCREW ITXSCT	2	-
14	576277501	BRACKET	1	-
15	525760904	SCREW ITXSCM	4	-
16	525741701	MANIFOLD	1	-
17	522911301	TUBULAR RIVET	4	-
18	522918501	GASKET	1	-
19	588986001	GASKET KIT	1	-
1	597768201	GEAR HOUSING ASSY -	1	-
2	738210104	BALL BEARING -	2	-
3	525528101	PEN	1	-

Ref.	Article N.	Description	Qty	Kit
		-		
4	506449301	CIRCLIP -	1	-
5	578439001	CLUTCH ASSY -	1	-
6	525528401	CLUTCH DRUM ASSY -	1	-
7	544218403	SCREW ITXSCM -	3	-
8	575659901	GASKET -	1	-
9	523013601	EXHAUST PIPE ASSY -	1	-
10	525755101	SCREW ITXSCFM -	1	-
11	525528201	WEAR PLATE -	2	-
12	525528901	GEAR WHEEL SHAFT -	1	-
13	525528701	CONNECTING ROD -	2	-
14	525528801	GEAR WHEEL -	1	-
15	525529001	GASKET -	1	-
16	525528301	HUB CAP -	1	-
17	525755101	SCREW ITXSCFM -	6	-
18	575484101	PLUG -	1	-
1	577669901	CRANKCASE -	1	-
2	522878401	PIN -	2	-
3	525637301	SEALING RING -	2	-
4	735312710	CIRCLIP -	2	-
5	525825001	SCREW ITXSCM -	3	-
6	525728401	BALL BEARING -	2	-

Ref.	Article N.	Description	Qty	Kit
7	525521901	GASKET -	1	-
1	577670001	CRANKSHAFT KIT -	1	-
2	575504901	NEEDLE BEARING -	1	-
3	525637301	SEALING RING -	2	-
4	525728401	BALL BEARING -	2	-
1	731711451	HEXAGON NUT FLANGE -	2	-
2	731231401	HEXAGON NUT -	8	-
3	525350802	BAR -	1	-
4	525351701	WEAR PLATE -	1	-
5	525351501	BLADE -	2	-
6	525351201	BAR -	1	-
7	525351901	SPACER -	10	-
8	525755105	SCREW ITXSCFM -	8	-
9	525352001	BRACKET -	1	-
10	525755103	SCREW ITXSCFM -	2	-
11	504088502	TRANSPORT GUARD -	1	-
1	525744701	HEAT PROTECTOR -	1	-
2	504088001	SCREW ITXSCM -	2	-
3	575434701	CYLINDER COVER ASSY -	1	-
4	575434601	THREAD BUSHING -	2	-
1	523014203	TANK ASSY -	1	-
2	544105802	TUBULAR RIVET	2	-

Ref.	Article N.	Description	Qty	Kit
		-		
3	574603901	FUEL FILTER -	1	-
4	544325002	FUEL HOSE *300mm*	1	-
5	575553801	GROMMET -	1	-
6	574600201	HOSE *150mm*	1	-
7	590324601	TANK CAP ASSY -	1	-
8	525822001	FUEL TANK ISOLATOR -	2	-
9	525755101	SCREW ITXSCFM -	2	-
10	537184901	O-RING -	1	-
1	504089301	REAR HANDLE -	1	-
2	504089701	THROTTLE LOCKOUT -	1	-
3	504089401	THROTTLE CONTROL -	1	-
4	504089601	SPRING -	1	-
5	504089201	REAR HANDLE -	1	-
6	537419001	SWITCH -	1	-
7	574488802	SHORT CIRCUIT CABLE -	1	-
8	575572101	THROTTLE CABLE ASSY -	1	-
9	523015401	HANDLE HOLDER -	1	-
10	573925801	SCREW ITXSCFT -	6	-
11	525633501	ANTIVIBRATION ELEMENT -	4	-
12	525633701	SLEEVE -	2	-
13	734181455	WASHER -	4	-

Ref.	Article N.	Description	Qty	Kit
14	544218405	SCREW ITXSCM -	2	-
15	587130002	LABEL -	1	-
16	544218403	SCREW ITXSCM -	2	-
17	525633601	ANTIVIBRATION ELEMENT -	4	-
18	525633801	SLEEVE -	2	-
19	504091201	HANDLE -	1	-
20	575232002	O-RING -	1	-
21	504089501	LOCKING BUTTON -	1	-
22	504089801	RECOIL SPRING -	1	-
1	525739501	FLYWHEEL ASSY -	1	-
2	525637101	STARTER PAWL -	2	-
3	573951501	SPRING -	2	-
4	735583000	WASHER -	2	-
5	731711651	HEXAGON NUT FLANGE -	1	-
6	590710201	SPARK PLUG -	1	-
7	525755101	SCREW ITXSCFM -	2	-
8	585074002	IGNITION MODULE -	1	-
9	501485601	CONTACT SPRING -	1	-
10	577572501	SPARK PLUG CAP -	1	-
1	523032601	MUFFLER ASSY -	1	-
2	525741601	SPARK ARRESTER -	1	-
3	504087901	SCREW ITXSCM	1	-

Ref.	Article N.	Description	Qty	Kit
		-		
4	522997301	GASKET -	1	-
5	525755101	SCREW ITXSCFM -	2	-
1	523009201	STARTER ASSY -	1	-
2	575489501	STARTER HANDLE -	1	-
3	523009901	STARTER HOUSING -	1	-
4	575896401	SPRING -	1	-
5	574286902	STARTER ROPE -	1	-
6	523010701	STARTER PULLEY -	1	-
7	523011001	SPRING -	1	-
8	523011201	DRIVER -	1	-
9	577226103	SCREW ITXSCT -	1	-
10	504088001	SCREW ITXSCM -	4	-
11	576120802	DECAL -	1	-
1	577380301	CYLINDER -	1	-
2	510223602	PISTON ASSY -	1	-
3	737440800	CIRCLIP -	2	-
4	525577701	WASHER -	2	-
5	505155801	PISTON RING -	1	-
6	575504901	NEEDLE BEARING -	1	-
7	525825001	SCREW ITXSCM -	2	-
8	525522101	GASKET -	1	-

Ref.	Article N.	Description	Qty	Kit
9	523013501	HEAT DEFLECTOR -	1	-

CYLINDER PISTON

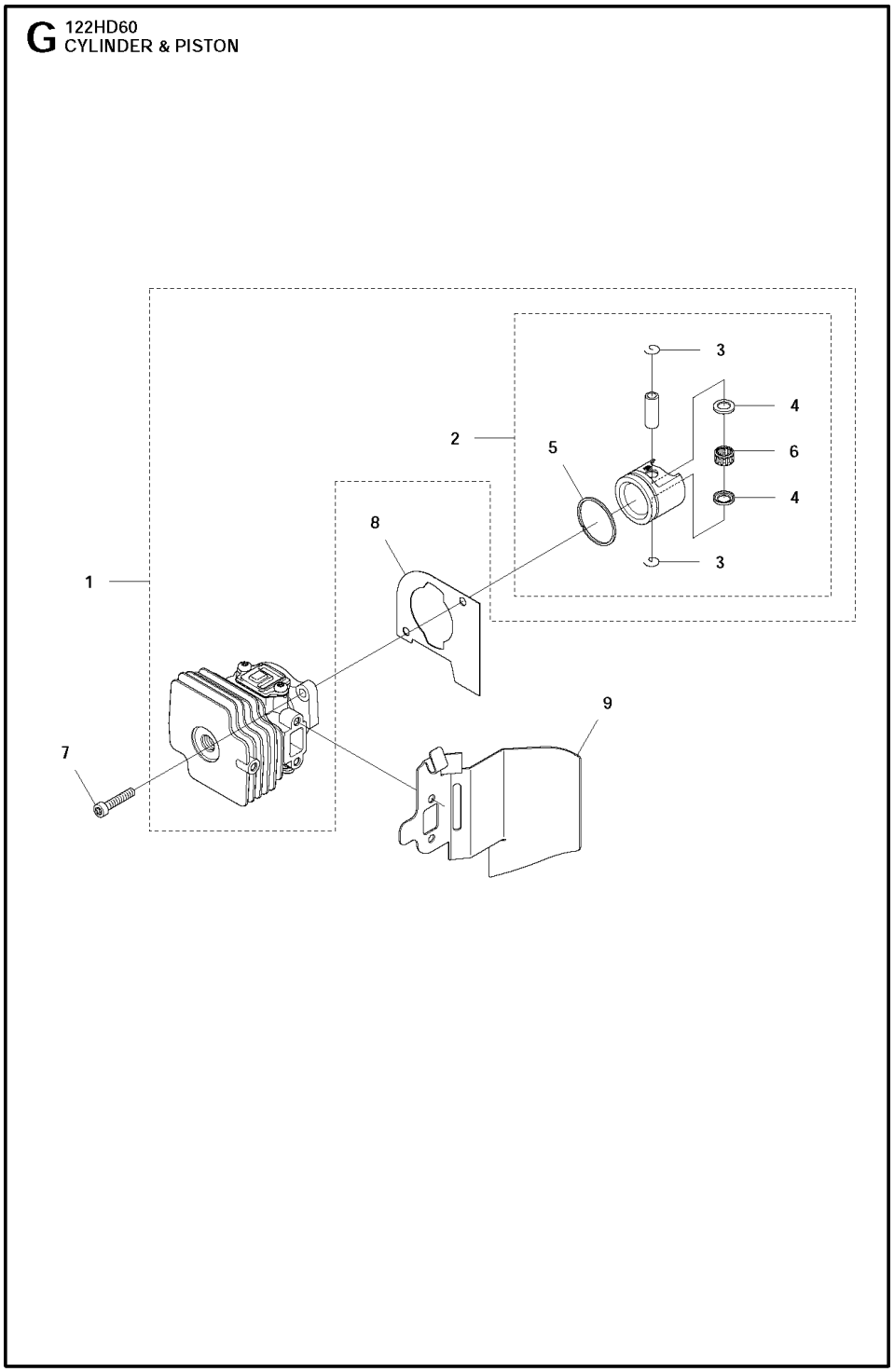

Ref.	Article N.	Description	Qty	Kit
1	577501201	ACCESSORY BAG -	1	-
2	577765601	GREASE -	1	-
3	575738201	COMBINATION WRENCH -	1	-
4	577501202	ACCESSORY BAG *US*	1	-
5	577765601	GREASE -	1	-
6	575738201	COMBINATION WRENCH -	1	-
7	530030270	OIL *OIL (BLUE CAP) XP 2*	1	-
8	544142201	GREASE *UL22*	1	-
9	544142101	GREASE *UL21*	1	-
10	588814801	GREASE *Shell Gardus*	1	-
1	576645601	DECAL	1	-
2	537213209	KNOB	1	-
3	523013101	AIR FILTER COVER	1	-
4	523013401	AIR FILTER	1	-
5	573925802	SCREW ITXSCFT	2	-
6	523012501	CHOKE	1	-
7	523012701	FILTER HOLDER ASSY	1	-
8	544105802	TUBULAR RIVET	2	-
9	544105803	TUBULAR RIVET	1	-
10	731231401	HEXAGON NUT	1	-
11	523012401	CARBURETTOR	1	-
12	525548501	GASKET	1	-
13	574444002	SCREW ITXSCT	2	-
14	576277501	BRACKET	1	-
15	525760904	SCREW ITXSCM	4	-
16	525741701	MANIFOLD	1	-
17	522911301	TUBULAR RIVET	4	-
18	522918501	GASKET	1	-
19	588986001	GASKET KIT	1	-
1	597768201	GEAR HOUSING ASSY -	1	-

Ref.	Article N.	Description	Qty	Kit
2	738210104	BALL BEARING -	2	-
3	525528101	PEN -	1	-
4	506449301	CIRCLIP -	1	-
5	578439001	CLUTCH ASSY -	1	-
6	525528401	CLUTCH DRUM ASSY -	1	-
7	544218403	SCREW ITXSCM -	3	-
8	575659901	GASKET -	1	-
9	523013601	EXHAUST PIPE ASSY -	1	-
10	525755101	SCREW ITXSCFM -	1	-
11	525528201	WEAR PLATE -	2	-
12	525528901	GEAR WHEEL SHAFT -	1	-
13	525528701	CONNECTING ROD -	2	-
14	525528801	GEAR WHEEL -	1	-
15	525529001	GASKET -	1	-
16	525528301	HUB CAP -	1	-
17	525755101	SCREW ITXSCFM -	6	-
18	575484101	PLUG -	1	-
1	577669901	CRANKCASE -	1	-
2	522878401	PIN -	2	-
3	525637301	SEALING RING -	2	-
4	735312710	CIRCLIP -	2	-
5	525825001	SCREW ITXSCM	3	-

Ref.	Article N.	Description	Qty	Kit
		-		
6	525728401	BALL BEARING -	2	-
7	525521901	GASKET -	1	-
1	577670001	CRANKSHAFT KIT -	1	-
2	575504901	NEEDLE BEARING -	1	-
3	525637301	SEALING RING -	2	-
4	525728401	BALL BEARING -	2	-
1	731711451	HEXAGON NUT FLANGE -	2	-
2	731231401	HEXAGON NUT -	8	-
3	525350802	BAR -	1	-
4	525351701	WEAR PLATE -	1	-
5	525351501	BLADE -	2	-
6	525351201	BAR -	1	-
7	525351901	SPACER -	10	-
8	525755105	SCREW ITXSCFM -	8	-
9	525352001	BRACKET -	1	-
10	525755103	SCREW ITXSCFM -	2	-
11	504088502	TRANSPORT GUARD -	1	-
1	525744701	HEAT PROTECTOR -	1	-
2	504088001	SCREW ITXSCM -	2	-
3	575434701	CYLINDER COVER ASSY -	1	-
4	575434601	THREAD BUSHING -	2	-

Ref.	Article N.	Description	Qty	Kit
1	523014203	TANK ASSY -	1	-
2	544105802	TUBULAR RIVET -	2	-
3	574603901	FUEL FILTER -	1	-
4	544325002	FUEL HOSE *300mm*	1	-
5	575553801	GROMMET -	1	-
6	574600201	HOSE *150mm*	1	-
7	590324601	TANK CAP ASSY -	1	-
8	525822001	FUEL TANK ISOLATOR -	2	-
9	525755101	SCREW ITXSCFM -	2	-
10	537184901	O-RING -	1	-
1	504089301	REAR HANDLE -	1	-
2	504089701	THROTTLE LOCKOUT -	1	-
3	504089401	THROTTLE CONTROL -	1	-
4	504089601	SPRING -	1	-
5	504089201	REAR HANDLE -	1	-
6	537419001	SWITCH -	1	-
7	574488802	SHORT CIRCUIT CABLE -	1	-
8	575572101	THROTTLE CABLE ASSY -	1	-
9	523015401	HANDLE HOLDER -	1	-
10	573925801	SCREW ITXSCFT -	6	-
11	525633501	ANTIVIBRATION ELEMENT -	4	-
12	525633701	SLEEVE	2	-

Ref.	Article N.	Description	Qty	Kit
		-		
13	734181455	WASHER -	4	-
14	544218405	SCREW ITXSCM -	2	-
15	587130002	LABEL -	1	-
16	544218403	SCREW ITXSCM -	2	-
17	525633601	ANTIVIBRATION ELEMENT -	4	-
18	525633801	SLEEVE -	2	-
19	504091201	HANDLE -	1	-
20	575232002	O-RING -	1	-
21	504089501	LOCKING BUTTON -	1	-
22	504089801	RECOIL SPRING -	1	-
1	525739501	FLYWHEEL ASSY -	1	-
2	525637101	STARTER PAWL -	2	-
3	573951501	SPRING -	2	-
4	735583000	WASHER -	2	-
5	731711651	HEXAGON NUT FLANGE -	1	-
6	590710201	SPARK PLUG -	1	-
7	525755101	SCREW ITXSCFM -	2	-
8	585074002	IGNITION MODULE -	1	-
9	501485601	CONTACT SPRING -	1	-
10	577572501	SPARK PLUG CAP -	1	-
1	523032601	MUFFLER ASSY -	1	-

Ref.	Article N.	Description	Qty	Kit
2	525741601	SPARK ARRESTER -	1	-
3	504087901	SCREW ITXSCM -	1	-
4	522997301	GASKET -	1	-
5	525755101	SCREW ITXSCFM -	2	-
1	523009201	STARTER ASSY -	1	-
2	575489501	STARTER HANDLE -	1	-
3	523009901	STARTER HOUSING -	1	-
4	575896401	SPRING -	1	-
5	574286902	STARTER ROPE -	1	-
6	523010701	STARTER PULLEY -	1	-
7	523011001	SPRING -	1	-
8	523011201	DRIVER -	1	-
9	577226103	SCREW ITXSCT -	1	-
10	504088001	SCREW ITXSCM -	4	-
11	576120802	DECAL -	1	-
1	577380301	CYLINDER -	1	-
2	510223602	PISTON ASSY -	1	-
3	737440800	CIRCLIP -	2	-
4	525577701	WASHER -	2	-
5	505155801	PISTON RING -	1	-
6	575504901	NEEDLE BEARING -	1	-
7	525825001	SCREW ITXSCM	2	-

Ref.	Article N.	Description	Qty	Kit
		-		
8	525522101	GASKET -	1	-
9	523013501	HEAT DEFLECTOR -	1	-