Product Catalog: Husqvarna/125B

ENGINE

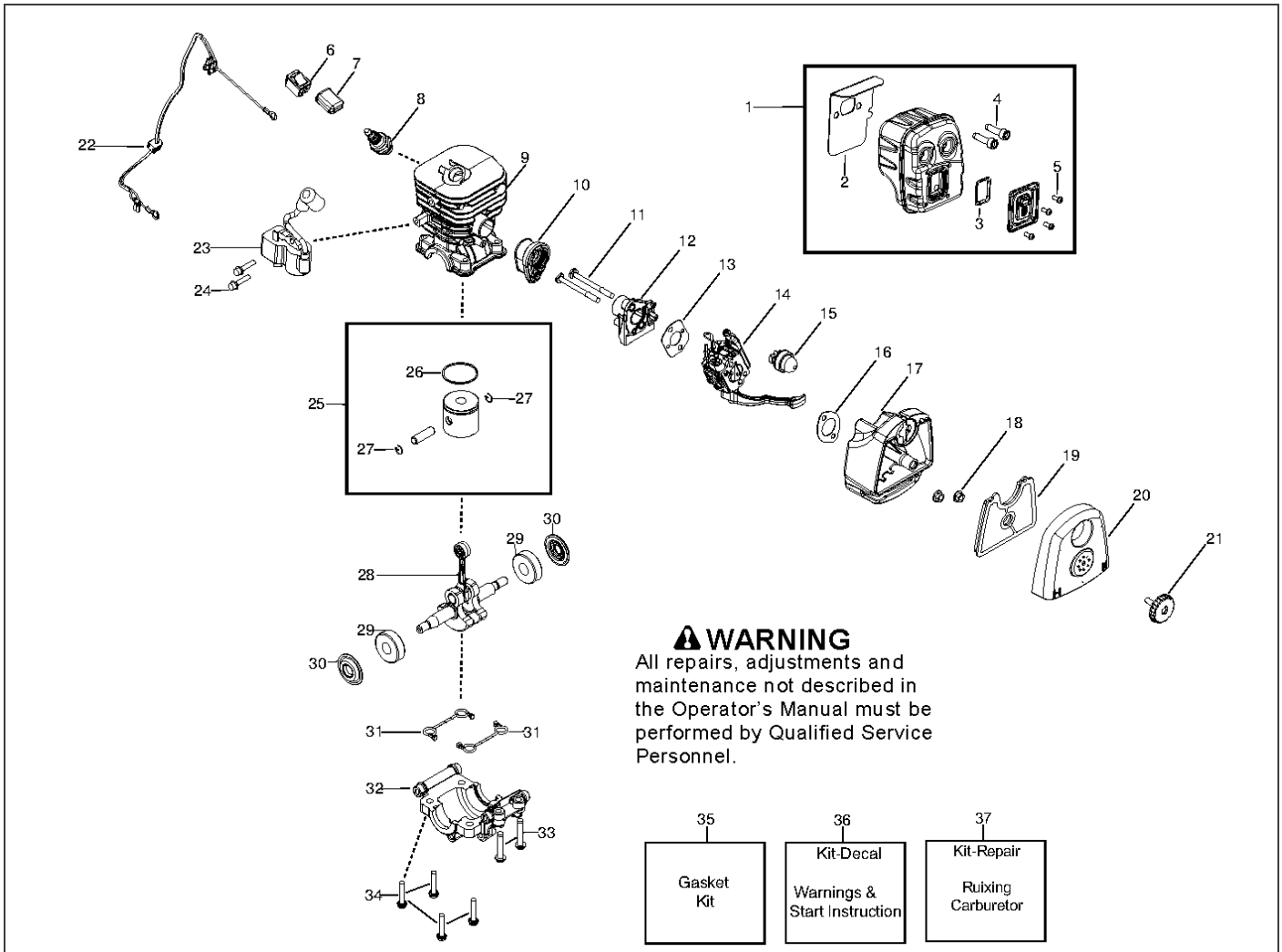

Ref.	Article N.	Description	Qty	Kit
1	580502701	MUFFLER -	1	-
3	545081810	KIT -	1	-
4	530058982	BOLT -	2	-
5	530015241	SCREW -	1	-
6	545049301	SWITCH -	1	-
7	545128201	PROTECTOR, SWITCH -	1	-

Ref.	Article N.	Description	Qty	Kit
8	952030249	SPARK PLUG -	1	-
9	587597301	CYLINDER *Chrome*	1	-
10	545132501	BOOT, CARB -	1	-
11	530016187	SCREW -	1	-
12	545133301	PLATE -	1	-
14	590460102	CARBURETTOR KIT -	1	-
15	530047721	PURGE -	1	-
17	545109801	BASE, AIRBOX -	1	-
18	530016101	NUT -	1	-
19	597797901	AIR FILTER -	1	-
20	545109601	COVER -	1	-
21	530059796	KNOB ASSY -	1	-
22	545108202	ASSY, LEADWIRE -	1	-
23	545108101	IGNITION MODULE -	1	-
24	530016456	SCREW -	1	-
25	545081814	PISTON -	1	-
26	575227901	RING -	1	-
27	530015162	CIRCLIP -	1	-
28	900000002	DUMMY PART -	1	-
29	545013401	BEARING -	1	-
30	545081815	KIT -	1	-
32	545068301	BEARING CAP	1	-

Ref.	Article N.	Description	Qty	Kit
		-		
33	530015940	SCREW -	1	-
34	530015897	SCREW -	1	-
35	545081813	GASKET -	1	-
36	545081863	KIT -	1	-
37	599604201	SERVICE KIT -	1	-
1	581337205	TANK *SERIAL 202522XXXXX AND LOWER*	1	-
1	581337215	TANK *SERIAL 202523XXXXX AND HIGHER*	1	-
2	578931503	FUEL CAP ASSY *SERIAL 202522XXXXX AND LOWER, PLEASE VERIFY WHICH IS NEEDED BY COMPARING CAP STYLE*	1	-
3	578931504	FUEL CAP ASSY *SERIAL 202523XXXXX AND HIGHER, PLEASE VERIFY WHICH IS NEEDED BY COMPARING CAP STYLE*	1	-
4	530047721	PURGE	1	-
5	581798001	FUEL HOSE	1	-
6	530095646	FUEL FILTER	1	-
1	545081817	ROPE *Kit - Rope*	1	-
2	545043204	STARTER HANDLE *Handle - Starter*	1	-
3	530015814	SCREW *Screw*	1	-
4	545081822	KIT *Kit - Cruise control*	1	-
5	530015147	WASHER *Washer - Wave*	1	-
6	545111501	RATCHET CRUISE CONTROL *Ratchet - Cruise control*	1	-
7	530015814	SCREW *Screw*	1	-
8	545119002	HANDLE - ASSIST *Handle - Assist*	1	-
9	545157901	ASSY, MUFFLER GUARD *Assy. - Muffler guard*	1	-
10	545003502	SCREW	1	-

Ref.	Article N.	Description	Qty	Kit
		Bolt - Tube clamp		
11	545111301	WIRE *Wire - Linkage*	1	-
12	545111601	TRIGGER *Trigger - Throttle*	1	-
13	545131701	WIRE *Wire - Handle ground*	1	-
14	581449403	IMPELLER	1	-
15	530015197	NUT *Nut - Blower tube*	1	-
16	545111101	SPRING *Spring - Vac door*	1	-
17	545111201	COVER *Cover - Vac door*	1	-
18	530015814	SCREW *Screw*	1	-
19	575533201	ASSEMBLY *Assy - Outer scroll*	1	-
20	545147101	NUT *Nut - Impeller*	1	-
21	900000002	DUMMY PART *Blade - ***See Service Reference****	1	-
22	900000002	DUMMY PART *Washer - ***See Service Reference****	1	-
23	545164501	WASHER *Washer - Impeller*	1	-
24	530016445	SCREW FUEL TANK RETAINER *Screw*	1	-
25	545110001	SCROLL *Scroll - Inner*	1	-
26	530047721	PURGE *Bulb - Purge*	1	-
27	581798001	FUEL HOSE *Fuel Line - ***See Service Reference****	1	-
28	900000002	DUMMY PART *Fuel Cap w Retainer - See Fuel tank page*	1	-
29	530095601	FUEL FILTER *30 pcs, plastic bag of 530095646*	1	-
29	530095646	FUEL FILTER	1	-
30	900000002	DUMMY PART *Fuel Tank - See Fuel tank page*	1	-
31	530015814	SCREW *Screw*	1	-

Ref.	Article N.	Description	Qty	Kit
32	545132801	SCROLL, FLYWHEEL	1	-
33	530015814	SCREW *Screw*	1	-
34	530016445	SCREW FUEL TANK RETAINER *Screw*	1	-
35	576423301	FLYWHEEL *Assy - Flywheel*	1	-
36	530015828	WASHER *Washer*	1	-
37	530016134	NUT *Nut - Flywheel*	1	-
38	545108801	COVER *Cover - Motor housing*	1	-
39	545112801	SCREW *Screw*	1	-
40	545089001	HUB *Hub*	1	-
41	545115901	SPRING *Spring - EPS2*	1	-
42	545006084	KIT *Kit - Starter*	1	-
43	530042095	SPRING *Spring - Starter*	1	-
44	545111801	STARTER ASSY *Housing - Starter Cover*	1	-
45	530016386	SCREW *Screw*	1	-
14	581449403	IMPELLER	1	-
22	545164501	WASHER	1	-
28	545107605	CRANKSHAFT ASSY	1	-
1	530150350	TANK *Serial Number - 201212XXXXX and lower*	1	-
2	545108901	FUEL TANK ASSY *Serial Number - 201212XXXXX and lower*	1	-
4	578931503	FUEL CAP ASSY *Serial Number - 201213XXXXX and higher*	1	-
5	581337209	TANK *Serial Number - 201213XXXXX and higher*	1	-
6	545173201	IMPELLER *Serial Number - 201414XXXXX and lower*	1	-
7	545164501	WASHER *Serial Number - 201414XXXXX and lower*	1	-

Ref.	Article N.	Description	Qty	Kit
8	545081816	KIT *Serial Number - 201414XXXXX and lower*	1	-
9	581449402	IMPELLER *Serial Number - 201415XXXXX and higher*	1	-
10	545164501	WASHER *Serial Number - 201414XXXXX and lower*	1	-
11	588199401	KIT *Serial Number - 201415XXXXX and higher*	1	-
0	545081816	KIT *Serial Number - 201414XXXXX and lower*	1	-
1	588199401	KIT *Serial Number - 201415XXXXX and higher*	1	-
1	545140201	TUBE -	1	-
2	545118001	TUBE -	1	-
3	545119501	NOZZLE -	1	-
2	545134801	DECAL *Starter Housing*	1	-
4	900000002	DUMMY PART *Not Used*	1	-
6	545081809	KIT *Starting & Warning Decals (North America)*	1	-
7	545081863	KIT *Starting & Warning Decals (Outside North America)*	1	-

FUEL TANK

FUEL TANK
125B / BVX

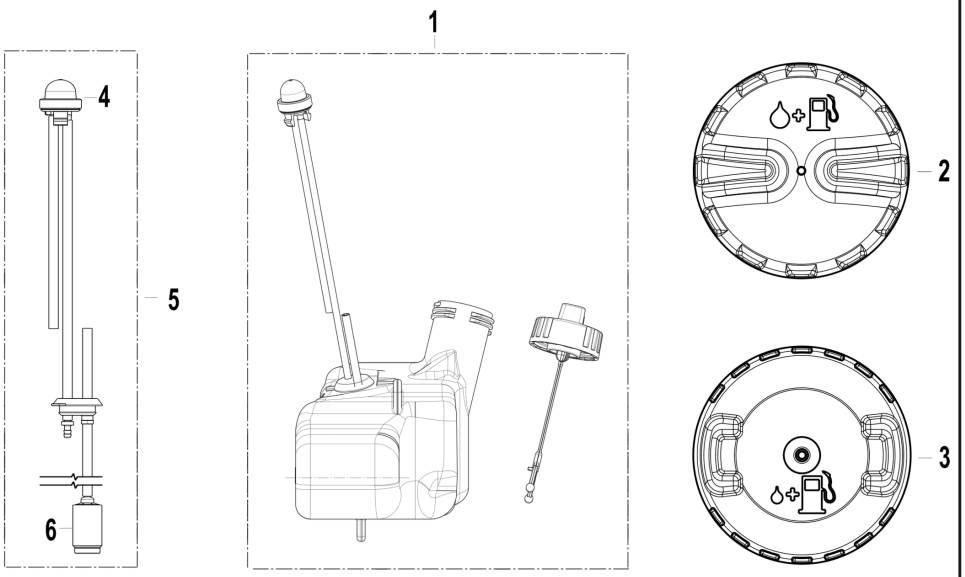

Ref.	Article N.	Description	Qty	Kit
1	580502701	MUFFLER -	1	-
3	545081810	KIT -	1	-
4	530058982	BOLT -	2	-

Ref.	Article N.	Description	Qty	Kit
5	530015241	SCREW -	1	-
6	545049301	SWITCH -	1	-
7	545128201	PROTECTOR, SWITCH -	1	-
8	952030249	SPARK PLUG -	1	-
9	587597301	CYLINDER *Chrome*	1	-
10	545132501	BOOT, CARB -	1	-
11	530016187	SCREW -	1	-
12	545133301	PLATE -	1	-
14	590460102	CARBURETTOR KIT -	1	-
15	530047721	PURGE -	1	-
17	545109801	BASE, AIRBOX -	1	-
18	530016101	NUT -	1	-
19	597797901	AIR FILTER -	1	-
20	545109601	COVER -	1	-
21	530059796	KNOB ASSY -	1	-
22	545108202	ASSY, LEADWIRE -	1	-
23	545108101	IGNITION MODULE -	1	-
24	530016456	SCREW -	1	-
25	545081814	PISTON -	1	-
26	575227901	RING -	1	-
27	530015162	CIRCLIP -	1	-
28	900000002	DUMMY PART	1	-

Ref.	Article N.	Description	Qty	Kit
		-		
29	545013401	BEARING -	1	-
30	545081815	KIT -	1	-
32	545068301	BEARING CAP -	1	-
33	530015940	SCREW -	1	-
34	530015897	SCREW -	1	-
35	545081813	GASKET -	1	-
36	545081863	KIT -	1	-
37	599604201	SERVICE KIT -	1	-
1	581337205	TANK *SERIAL 202522XXXXX AND LOWER*	1	-
1	581337215	TANK *SERIAL 202523XXXXX AND HIGHER*	1	-
2	578931503	FUEL CAP ASSY *SERIAL 202522XXXXX AND LOWER, PLEASE VERIFY WHICH IS NEEDED BY COMPARING CAP STYLE*	1	-
3	578931504	FUEL CAP ASSY *SERIAL 202523XXXXX AND HIGHER, PLEASE VERIFY WHICH IS NEEDED BY COMPARING CAP STYLE*	1	-
4	530047721	PURGE	1	-
5	581798001	FUEL HOSE	1	-
6	530095646	FUEL FILTER	1	-
1	545081817	ROPE *Kit - Rope*	1	-
2	545043204	STARTER HANDLE *Handle - Starter*	1	-
3	530015814	SCREW *Screw*	1	-
4	545081822	KIT *Kit - Cruise control*	1	-
5	530015147	WASHER *Washer - Wave*	1	-
6	545111501	RATCHET CRUISE CONTROL *Ratchet - Cruise control*	1	-
7	530015814	SCREW	1	-

Ref.	Article N.	Description	Qty	Kit
		Screw		
8	545119002	HANDLE - ASSIST *Handle - Assist*	1	-
9	545157901	ASSY, MUFFLER GUARD *Assy. - Muffler guard*	1	-
10	545003502	SCREW *Bolt - Tube clamp*	1	-
11	545111301	WIRE *Wire - Linkage*	1	-
12	545111601	TRIGGER *Trigger - Throttle*	1	-
13	545131701	WIRE *Wire - Handle ground*	1	-
14	581449403	IMPELLER	1	-
15	530015197	NUT *Nut - Blower tube*	1	-
16	545111101	SPRING *Spring - Vac door*	1	-
17	545111201	COVER *Cover - Vac door*	1	-
18	530015814	SCREW *Screw*	1	-
19	575533201	ASSEMBLY *Assy - Outer scroll*	1	-
20	545147101	NUT *Nut - Impeller*	1	-
21	900000002	DUMMY PART *Blade - ***See Service Reference****	1	-
22	900000002	DUMMY PART *Washer - ***See Service Reference****	1	-
23	545164501	WASHER *Washer - Impeller*	1	-
24	530016445	SCREW FUEL TANK RETAINER *Screw*	1	-
25	545110001	SCROLL *Scroll - Inner*	1	-
26	530047721	PURGE *Bulb - Purge*	1	-
27	581798001	FUEL HOSE *Fuel Line - ***See Service Reference****	1	-
28	900000002	DUMMY PART *Fuel Cap w Retainer - See Fuel tank page*	1	-
29	530095601	FUEL FILTER	1	-

Ref.	Article N.	Description	Qty	Kit
		30 pcs, plastic bag of 530095646		
29	530095646	FUEL FILTER	1	-
30	900000002	DUMMY PART *Fuel Tank - See Fuel tank page*	1	-
31	530015814	SCREW *Screw*	1	-
32	545132801	SCROLL, FLYWHEEL	1	-
33	530015814	SCREW *Screw*	1	-
34	530016445	SCREW FUEL TANK RETAINER *Screw*	1	-
35	576423301	FLYWHEEL *Assy - Flywheel*	1	-
36	530015828	WASHER *Washer*	1	-
37	530016134	NUT *Nut - Flywheel*	1	-
38	545108801	COVER *Cover - Motor housing*	1	-
39	545112801	SCREW *Screw*	1	-
40	545089001	HUB *Hub*	1	-
41	545115901	SPRING *Spring - EPS2*	1	-
42	545006084	KIT *Kit - Starter*	1	-
43	530042095	SPRING *Spring - Starter*	1	-
44	545111801	STARTER ASSY *Housing - Starter Cover*	1	-
45	530016386	SCREW *Screw*	1	-
14	581449403	IMPELLER	1	-
22	545164501	WASHER	1	-
28	545107605	CRANKSHAFT ASSY	1	-
1	530150350	TANK *Serial Number - 201212XXXXX and lower*	1	-
2	545108901	FUEL TANK ASSY *Serial Number - 201212XXXXX and lower*	1	-
4	578931503	FUEL CAP ASSY *Serial Number - 201213XXXXX and higher*	1	-

Ref.	Article N.	Description	Qty	Kit
5	581337209	TANK *Serial Number - 201213XXXXX and higher*	1	-
6	545173201	IMPELLER *Serial Number - 201414XXXXX and lower*	1	-
7	545164501	WASHER *Serial Number - 201414XXXXX and lower*	1	-
8	545081816	KIT *Serial Number - 201414XXXXX and lower*	1	-
9	581449402	IMPELLER *Serial Number - 201415XXXXX and higher*	1	-
10	545164501	WASHER *Serial Number - 201414XXXXX and lower*	1	-
11	588199401	KIT *Serial Number - 201415XXXXX and higher*	1	-
0	545081816	KIT *Serial Number - 201414XXXXX and lower*	1	-
1	588199401	KIT *Serial Number - 201415XXXXX and higher*	1	-
1	545140201	TUBE -	1	-
2	545118001	TUBE -	1	-
3	545119501	NOZZLE -	1	-
2	545134801	DECAL *Starter Housing*	1	-
4	900000002	DUMMY PART *Not Used*	1	-
6	545081809	KIT *Starting & Warning Decals (North America)*	1	-
7	545081863	KIT *Starting & Warning Decals (Outside North America)*	1	-

HOUSING

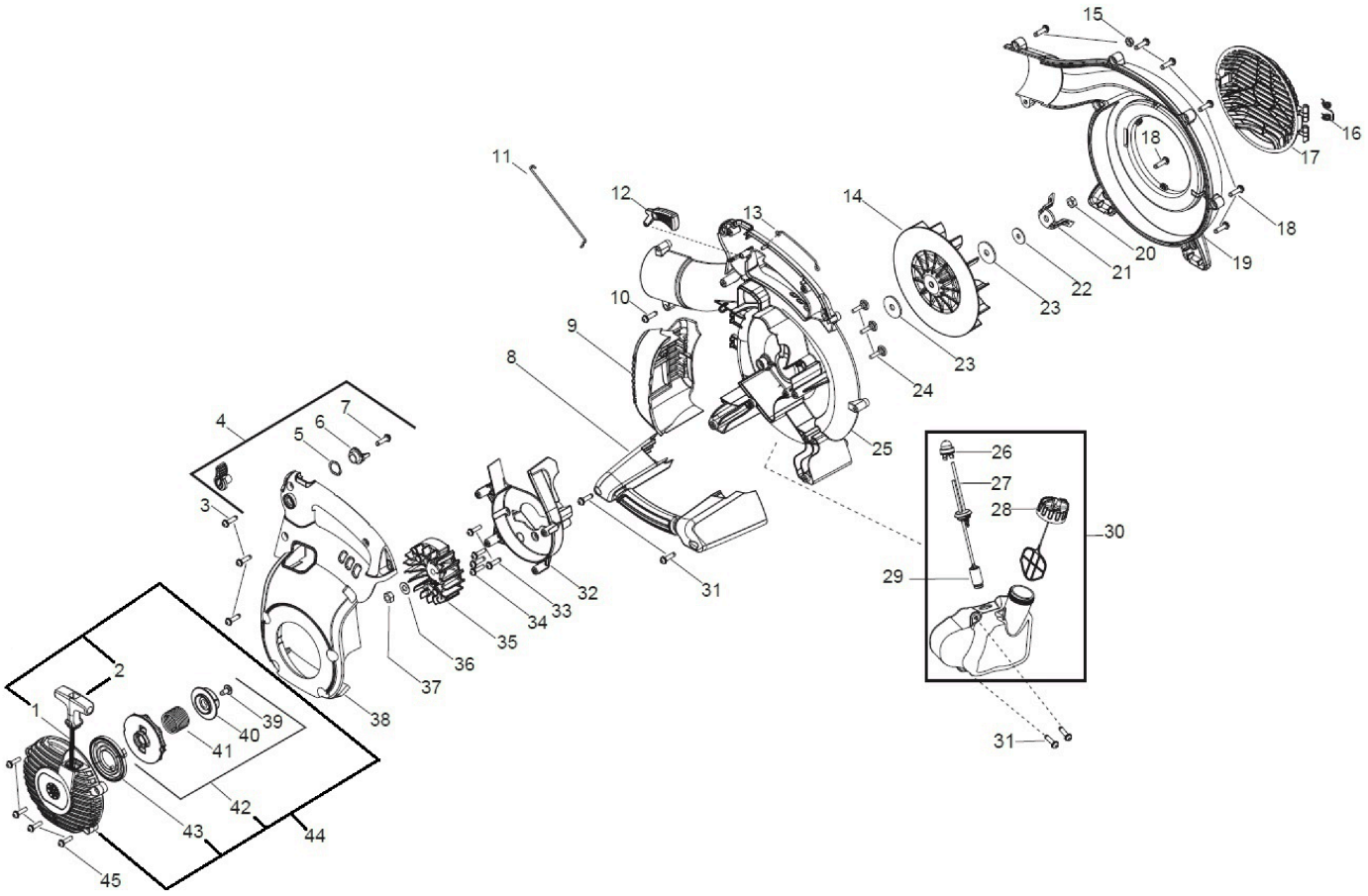

Ref.	Article N.	Description	Qty	Kit
1	580502701	MUFFLER -	1	-
3	545081810	KIT -	1	-
4	530058982	BOLT -	2	-
5	530015241	SCREW -	1	-
6	545049301	SWITCH -	1	-
7	545128201	PROTECTOR, SWITCH -	1	-
8	952030249	SPARK PLUG -	1	-
9	587597301	CYLINDER *Chrome*	1	-
10	545132501	BOOT, CARB -	1	-
11	530016187	SCREW -	1	-
12	545133301	PLATE -	1	-

Ref.	Article N.	Description	Qty	Kit
14	590460102	CARBURETTOR KIT -	1	-
15	530047721	PURGE -	1	-
17	545109801	BASE, AIRBOX -	1	-
18	530016101	NUT -	1	-
19	597797901	AIR FILTER -	1	-
20	545109601	COVER -	1	-
21	530059796	KNOB ASSY -	1	-
22	545108202	ASSY, LEADWIRE -	1	-
23	545108101	IGNITION MODULE -	1	-
24	530016456	SCREW -	1	-
25	545081814	PISTON -	1	-
26	575227901	RING -	1	-
27	530015162	CIRCLIP -	1	-
28	900000002	DUMMY PART -	1	-
29	545013401	BEARING -	1	-
30	545081815	KIT -	1	-
32	545068301	BEARING CAP -	1	-
33	530015940	SCREW -	1	-
34	530015897	SCREW -	1	-
35	545081813	GASKET -	1	-
36	545081863	KIT -	1	-
37	599604201	SERVICE KIT	1	-

Ref.	Article N.	Description	Qty	Kit
		-		
1	581337205	TANK *SERIAL 202522XXXXX AND LOWER*	1	-
1	581337215	TANK *SERIAL 202523XXXXX AND HIGHER*	1	-
2	578931503	FUEL CAP ASSY *SERIAL 202522XXXXX AND LOWER, PLEASE VERIFY WHICH IS NEEDED BY COMPARING CAP STYLE*	1	-
3	578931504	FUEL CAP ASSY *SERIAL 202523XXXXX AND HIGHER, PLEASE VERIFY WHICH IS NEEDED BY COMPARING CAP STYLE*	1	-
4	530047721	PURGE	1	-
5	581798001	FUEL HOSE	1	-
6	530095646	FUEL FILTER	1	-
1	545081817	ROPE *Kit - Rope*	1	-
2	545043204	STARTER HANDLE *Handle - Starter*	1	-
3	530015814	SCREW *Screw*	1	-
4	545081822	KIT *Kit - Cruise control*	1	-
5	530015147	WASHER *Washer - Wave*	1	-
6	545111501	RATCHET CRUISE CONTROL *Ratchet - Cruise control*	1	-
7	530015814	SCREW *Screw*	1	-
8	545119002	HANDLE - ASSIST *Handle - Assist*	1	-
9	545157901	ASSY, MUFFLER GUARD *Assy. - Muffler guard*	1	-
10	545003502	SCREW *Bolt - Tube clamp*	1	-
11	545111301	WIRE *Wire - Linkage*	1	-
12	545111601	TRIGGER *Trigger - Throttle*	1	-
13	545131701	WIRE *Wire - Handle ground*	1	-
14	581449403	IMPELLER	1	-
15	530015197	NUT *Nut - Blower tube*	1	-

Ref.	Article N.	Description	Qty	Kit
16	545111101	SPRING *Spring - Vac door*	1	-
17	545111201	COVER *Cover - Vac door*	1	-
18	530015814	SCREW *Screw*	1	-
19	575533201	ASSEMBLY *Assy - Outer scroll*	1	-
20	545147101	NUT *Nut - Impeller*	1	-
21	900000002	DUMMY PART *Blade - ***See Service Reference****	1	-
22	900000002	DUMMY PART *Washer - ***See Service Reference****	1	-
23	545164501	WASHER *Washer - Impeller*	1	-
24	530016445	SCREW FUEL TANK RETAINER *Screw*	1	-
25	545110001	SCROLL *Scroll - Inner*	1	-
26	530047721	PURGE *Bulb - Purge*	1	-
27	581798001	FUEL HOSE *Fuel Line - ***See Service Reference****	1	-
28	900000002	DUMMY PART *Fuel Cap w Retainer - See Fuel tank page*	1	-
29	530095601	FUEL FILTER *30 pcs, plastic bag of 530095646*	1	-
29	530095646	FUEL FILTER	1	-
30	900000002	DUMMY PART *Fuel Tank - See Fuel tank page*	1	-
31	530015814	SCREW *Screw*	1	-
32	545132801	SCROLL, FLYWHEEL	1	-
33	530015814	SCREW *Screw*	1	-
34	530016445	SCREW FUEL TANK RETAINER *Screw*	1	-
35	576423301	FLYWHEEL *Assy - Flywheel*	1	-
36	530015828	WASHER *Washer*	1	-
37	530016134	NUT	1	-

Ref.	Article N.	Description	Qty	Kit
		Nut - Flywheel		
38	545108801	COVER *Cover - Motor housing*	1	-
39	545112801	SCREW *Screw*	1	-
40	545089001	HUB *Hub*	1	-
41	545115901	SPRING *Spring - EPS2*	1	-
42	545006084	KIT *Kit - Starter*	1	-
43	530042095	SPRING *Spring - Starter*	1	-
44	545111801	STARTER ASSY *Housing - Starter Cover*	1	-
45	530016386	SCREW *Screw*	1	-
14	581449403	IMPELLER	1	-
22	545164501	WASHER	1	-
28	545107605	CRANKSHAFT ASSY	1	-
1	530150350	TANK *Serial Number - 201212XXXXX and lower*	1	-
2	545108901	FUEL TANK ASSY *Serial Number - 201212XXXXX and lower*	1	-
4	578931503	FUEL CAP ASSY *Serial Number - 201213XXXXX and higher*	1	-
5	581337209	TANK *Serial Number - 201213XXXXX and higher*	1	-
6	545173201	IMPELLER *Serial Number - 201414XXXXX and lower*	1	-
7	545164501	WASHER *Serial Number - 201414XXXXX and lower*	1	-
8	545081816	KIT *Serial Number - 201414XXXXX and lower*	1	-
9	581449402	IMPELLER *Serial Number - 201415XXXXX and higher*	1	-
10	545164501	WASHER *Serial Number - 201414XXXXX and lower*	1	-
11	588199401	KIT *Serial Number - 201415XXXXX and higher*	1	-
0	545081816	KIT *Serial Number - 201414XXXXX and lower*	1	-

Ref.	Article N.	Description	Qty	Kit
1	588199401	KIT *Serial Number - 201415XXXXX and higher*	1	-
1	545140201	TUBE -	1	-
2	545118001	TUBE -	1	-
3	545119501	NOZZLE -	1	-
2	545134801	DECAL *Starter Housing*	1	-
4	900000002	DUMMY PART *Not Used*	1	-
6	545081809	KIT *Starting & Warning Decals (North America)*	1	-
7	545081863	KIT *Starting & Warning Decals (Outside North America)*	1	-

SERVICE REFERENCE

******* Service Reference *******

125B & 125BVX MODELS

Note: Due to product improvements, your unit may have a different impeller/crankshaft assembly. Please refer to the serial number on your unit and order the appropriate parts as shown.

Note: Serial Numbers - 201414XXXXX and lower:

Replacement of impeller will require updating crankshaft to 545107605. Please order all parts in the table below.

Replacement of crankshaft will require replacing impeller with 581449403. Please order all parts in the table below.

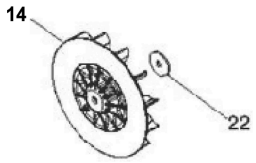

Serial Numbers- 201415XXXXX and higher, please use the following parts:

HOUSING: Ref.# 14	581449403	IMPELLER
HOUSING: Ref.# 22	545164501	WASHER (QTY. 1)
ENGINE : Ref.# 28	545107605	KIT, CRANKSHAFT

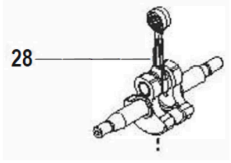

Ref.	Article N.	Description	Qty	Kit
1	580502701	MUFFLER -	1	-
3	545081810	KIT -	1	-
4	530058982	BOLT -	2	-

Ref.	Article N.	Description	Qty	Kit
5	530015241	SCREW -	1	-
6	545049301	SWITCH -	1	-
7	545128201	PROTECTOR, SWITCH -	1	-
8	952030249	SPARK PLUG -	1	-
9	587597301	CYLINDER *Chrome*	1	-
10	545132501	BOOT, CARB -	1	-
11	530016187	SCREW -	1	-
12	545133301	PLATE -	1	-
14	590460102	CARBURETTOR KIT -	1	-
15	530047721	PURGE -	1	-
17	545109801	BASE, AIRBOX -	1	-
18	530016101	NUT -	1	-
19	597797901	AIR FILTER -	1	-
20	545109601	COVER -	1	-
21	530059796	KNOB ASSY -	1	-
22	545108202	ASSY, LEADWIRE -	1	-
23	545108101	IGNITION MODULE -	1	-
24	530016456	SCREW -	1	-
25	545081814	PISTON -	1	-
26	575227901	RING -	1	-
27	530015162	CIRCLIP -	1	-
28	900000002	DUMMY PART	1	-

Ref.	Article N.	Description	Qty	Kit
		-		
29	545013401	BEARING -	1	-
30	545081815	KIT -	1	-
32	545068301	BEARING CAP -	1	-
33	530015940	SCREW -	1	-
34	530015897	SCREW -	1	-
35	545081813	GASKET -	1	-
36	545081863	KIT -	1	-
37	599604201	SERVICE KIT -	1	-
1	581337205	TANK *SERIAL 202522XXXXX AND LOWER*	1	-
1	581337215	TANK *SERIAL 202523XXXXX AND HIGHER*	1	-
2	578931503	FUEL CAP ASSY *SERIAL 202522XXXXX AND LOWER, PLEASE VERIFY WHICH IS NEEDED BY COMPARING CAP STYLE*	1	-
3	578931504	FUEL CAP ASSY *SERIAL 202523XXXXX AND HIGHER, PLEASE VERIFY WHICH IS NEEDED BY COMPARING CAP STYLE*	1	-
4	530047721	PURGE	1	-
5	581798001	FUEL HOSE	1	-
6	530095646	FUEL FILTER	1	-
1	545081817	ROPE *Kit - Rope*	1	-
2	545043204	STARTER HANDLE *Handle - Starter*	1	-
3	530015814	SCREW *Screw*	1	-
4	545081822	KIT *Kit - Cruise control*	1	-
5	530015147	WASHER *Washer - Wave*	1	-
6	545111501	RATCHET CRUISE CONTROL *Ratchet - Cruise control*	1	-
7	530015814	SCREW	1	-

Ref.	Article N.	Description	Qty	Kit
		Screw		
8	545119002	HANDLE - ASSIST *Handle - Assist*	1	-
9	545157901	ASSY, MUFFLER GUARD *Assy. - Muffler guard*	1	-
10	545003502	SCREW *Bolt - Tube clamp*	1	-
11	545111301	WIRE *Wire - Linkage*	1	-
12	545111601	TRIGGER *Trigger - Throttle*	1	-
13	545131701	WIRE *Wire - Handle ground*	1	-
14	581449403	IMPELLER	1	-
15	530015197	NUT *Nut - Blower tube*	1	-
16	545111101	SPRING *Spring - Vac door*	1	-
17	545111201	COVER *Cover - Vac door*	1	-
18	530015814	SCREW *Screw*	1	-
19	575533201	ASSEMBLY *Assy - Outer scroll*	1	-
20	545147101	NUT *Nut - Impeller*	1	-
21	900000002	DUMMY PART *Blade - ***See Service Reference****	1	-
22	900000002	DUMMY PART *Washer - ***See Service Reference****	1	-
23	545164501	WASHER *Washer - Impeller*	1	-
24	530016445	SCREW FUEL TANK RETAINER *Screw*	1	-
25	545110001	SCROLL *Scroll - Inner*	1	-
26	530047721	PURGE *Bulb - Purge*	1	-
27	581798001	FUEL HOSE *Fuel Line - ***See Service Reference****	1	-
28	900000002	DUMMY PART *Fuel Cap w Retainer - See Fuel tank page*	1	-
29	530095601	FUEL FILTER	1	-

Ref.	Article N.	Description	Qty	Kit
		30 pcs, plastic bag of 530095646		
29	530095646	FUEL FILTER	1	-
30	900000002	DUMMY PART *Fuel Tank - See Fuel tank page*	1	-
31	530015814	SCREW *Screw*	1	-
32	545132801	SCROLL, FLYWHEEL	1	-
33	530015814	SCREW *Screw*	1	-
34	530016445	SCREW FUEL TANK RETAINER *Screw*	1	-
35	576423301	FLYWHEEL *Assy - Flywheel*	1	-
36	530015828	WASHER *Washer*	1	-
37	530016134	NUT *Nut - Flywheel*	1	-
38	545108801	COVER *Cover - Motor housing*	1	-
39	545112801	SCREW *Screw*	1	-
40	545089001	HUB *Hub*	1	-
41	545115901	SPRING *Spring - EPS2*	1	-
42	545006084	KIT *Kit - Starter*	1	-
43	530042095	SPRING *Spring - Starter*	1	-
44	545111801	STARTER ASSY *Housing - Starter Cover*	1	-
45	530016386	SCREW *Screw*	1	-
14	581449403	IMPELLER	1	-
22	545164501	WASHER	1	-
28	545107605	CRANKSHAFT ASSY	1	-
1	530150350	TANK *Serial Number - 201212XXXXX and lower*	1	-
2	545108901	FUEL TANK ASSY *Serial Number - 201212XXXXX and lower*	1	-
4	578931503	FUEL CAP ASSY *Serial Number - 201213XXXXX and higher*	1	-

Ref.	Article N.	Description	Qty	Kit
5	581337209	TANK *Serial Number - 201213XXXXX and higher*	1	-
6	545173201	IMPELLER *Serial Number - 201414XXXXX and lower*	1	-
7	545164501	WASHER *Serial Number - 201414XXXXX and lower*	1	-
8	545081816	KIT *Serial Number - 201414XXXXX and lower*	1	-
9	581449402	IMPELLER *Serial Number - 201415XXXXX and higher*	1	-
10	545164501	WASHER *Serial Number - 201414XXXXX and lower*	1	-
11	588199401	KIT *Serial Number - 201415XXXXX and higher*	1	-
0	545081816	KIT *Serial Number - 201414XXXXX and lower*	1	-
1	588199401	KIT *Serial Number - 201415XXXXX and higher*	1	-
1	545140201	TUBE -	1	-
2	545118001	TUBE -	1	-
3	545119501	NOZZLE -	1	-
2	545134801	DECAL *Starter Housing*	1	-
4	900000002	DUMMY PART *Not Used*	1	-
6	545081809	KIT *Starting & Warning Decals (North America)*	1	-
7	545081863	KIT *Starting & Warning Decals (Outside North America)*	1	-

SERVICE REFERENCE

***** Service Reference *****

125B & 125BVX MODELS

Note: Due to product improvements, your unit may have a different fuel tank assembly, fuel cap and fuel lines. Please refer to the serial number on your unit and order the appropriate parts shown:

Serial Number - 201212XXXXX and lower, please use the following parts:

HOUSING	Ref. #27	530150350	CAP, FUEL
HOUSING	Ref. #29	545108901	ASSY, FUEL TANK

Serial Number - 201213XXXXX and higher, please use the following parts:

HOUSING	Ref. #27	578931503	CAP, FUEL
HOUSING	Ref. #29	581337209	ASSY, FUEL TANK

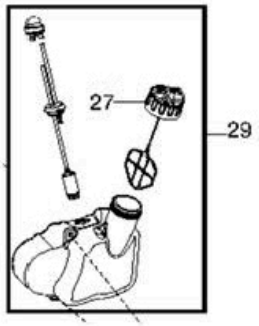

Note: Due to product improvements, your unit may have a different impeller assembly. Please refer to the serial number on your unit and order the appropriate parts shown:

Serial Number - 201414XXXXX and lower, please use the following parts:

HOUSING	Ref. #14	545173201	IMPELLER
HOUSING	Ref. #22	545164501	WASHER (QTY. 2)
ENGINE	Ref. #28	545081816	KIT, CRANKSHAFT

Note: IMPELLER (P/N 545173201) cannot be used with KIT, CRANKSHAFT (P/N 588199401). Use only with KIT, CRANKSHAFT (P/N 545081816).

201414XXXXX and lower:

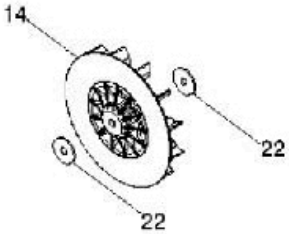

Serial Number - 201415XXXXX and higher, please use the following parts:

HOUSING	Ref. #14	581449402	IMPELLER
HOUSING	Ref. #22	545164501	WASHER (QTY. 1)
ENGINE	Ref. #28	588199401	KIT, CRANKSHAFT

Note: IMPELLER (P/N 581449402) cannot be used with KIT, CRANKSHAFT (P/N 545081816). Use only with KIT, CRANKSHAFT (P/N 588199401).

201415XXXXX and higher:

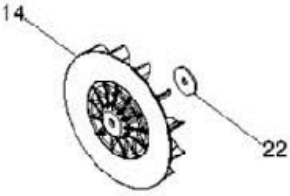

Ref.	Article N.	Description	Qty	Kit
1	580502701	MUFFLER -	1	-
3	545081810	KIT -	1	-
4	530058982	BOLT -	2	-

Ref.	Article N.	Description	Qty	Kit
5	530015241	SCREW -	1	-
6	545049301	SWITCH -	1	-
7	545128201	PROTECTOR, SWITCH -	1	-
8	952030249	SPARK PLUG -	1	-
9	587597301	CYLINDER *Chrome*	1	-
10	545132501	BOOT, CARB -	1	-
11	530016187	SCREW -	1	-
12	545133301	PLATE -	1	-
14	590460102	CARBURETTOR KIT -	1	-
15	530047721	PURGE -	1	-
17	545109801	BASE, AIRBOX -	1	-
18	530016101	NUT -	1	-
19	597797901	AIR FILTER -	1	-
20	545109601	COVER -	1	-
21	530059796	KNOB ASSY -	1	-
22	545108202	ASSY, LEADWIRE -	1	-
23	545108101	IGNITION MODULE -	1	-
24	530016456	SCREW -	1	-
25	545081814	PISTON -	1	-
26	575227901	RING -	1	-
27	530015162	CIRCLIP -	1	-
28	900000002	DUMMY PART	1	-

Ref.	Article N.	Description	Qty	Kit
		-		
29	545013401	BEARING -	1	-
30	545081815	KIT -	1	-
32	545068301	BEARING CAP -	1	-
33	530015940	SCREW -	1	-
34	530015897	SCREW -	1	-
35	545081813	GASKET -	1	-
36	545081863	KIT -	1	-
37	599604201	SERVICE KIT -	1	-
1	581337205	TANK *SERIAL 202522XXXXX AND LOWER*	1	-
1	581337215	TANK *SERIAL 202523XXXXX AND HIGHER*	1	-
2	578931503	FUEL CAP ASSY *SERIAL 202522XXXXX AND LOWER, PLEASE VERIFY WHICH IS NEEDED BY COMPARING CAP STYLE*	1	-
3	578931504	FUEL CAP ASSY *SERIAL 202523XXXXX AND HIGHER, PLEASE VERIFY WHICH IS NEEDED BY COMPARING CAP STYLE*	1	-
4	530047721	PURGE	1	-
5	581798001	FUEL HOSE	1	-
6	530095646	FUEL FILTER	1	-
1	545081817	ROPE *Kit - Rope*	1	-
2	545043204	STARTER HANDLE *Handle - Starter*	1	-
3	530015814	SCREW *Screw*	1	-
4	545081822	KIT *Kit - Cruise control*	1	-
5	530015147	WASHER *Washer - Wave*	1	-
6	545111501	RATCHET CRUISE CONTROL *Ratchet - Cruise control*	1	-
7	530015814	SCREW	1	-

Ref.	Article N.	Description	Qty	Kit
		Screw		
8	545119002	HANDLE - ASSIST *Handle - Assist*	1	-
9	545157901	ASSY, MUFFLER GUARD *Assy. - Muffler guard*	1	-
10	545003502	SCREW *Bolt - Tube clamp*	1	-
11	545111301	WIRE *Wire - Linkage*	1	-
12	545111601	TRIGGER *Trigger - Throttle*	1	-
13	545131701	WIRE *Wire - Handle ground*	1	-
14	581449403	IMPELLER	1	-
15	530015197	NUT *Nut - Blower tube*	1	-
16	545111101	SPRING *Spring - Vac door*	1	-
17	545111201	COVER *Cover - Vac door*	1	-
18	530015814	SCREW *Screw*	1	-
19	575533201	ASSEMBLY *Assy - Outer scroll*	1	-
20	545147101	NUT *Nut - Impeller*	1	-
21	900000002	DUMMY PART *Blade - ***See Service Reference****	1	-
22	900000002	DUMMY PART *Washer - ***See Service Reference****	1	-
23	545164501	WASHER *Washer - Impeller*	1	-
24	530016445	SCREW FUEL TANK RETAINER *Screw*	1	-
25	545110001	SCROLL *Scroll - Inner*	1	-
26	530047721	PURGE *Bulb - Purge*	1	-
27	581798001	FUEL HOSE *Fuel Line - ***See Service Reference****	1	-
28	900000002	DUMMY PART *Fuel Cap w Retainer - See Fuel tank page*	1	-
29	530095601	FUEL FILTER	1	-

Ref.	Article N.	Description	Qty	Kit
		30 pcs, plastic bag of 530095646		
29	530095646	FUEL FILTER	1	-
30	900000002	DUMMY PART *Fuel Tank - See Fuel tank page*	1	-
31	530015814	SCREW *Screw*	1	-
32	545132801	SCROLL, FLYWHEEL	1	-
33	530015814	SCREW *Screw*	1	-
34	530016445	SCREW FUEL TANK RETAINER *Screw*	1	-
35	576423301	FLYWHEEL *Assy - Flywheel*	1	-
36	530015828	WASHER *Washer*	1	-
37	530016134	NUT *Nut - Flywheel*	1	-
38	545108801	COVER *Cover - Motor housing*	1	-
39	545112801	SCREW *Screw*	1	-
40	545089001	HUB *Hub*	1	-
41	545115901	SPRING *Spring - EPS2*	1	-
42	545006084	KIT *Kit - Starter*	1	-
43	530042095	SPRING *Spring - Starter*	1	-
44	545111801	STARTER ASSY *Housing - Starter Cover*	1	-
45	530016386	SCREW *Screw*	1	-
14	581449403	IMPELLER	1	-
22	545164501	WASHER	1	-
28	545107605	CRANKSHAFT ASSY	1	-
1	530150350	TANK *Serial Number - 201212XXXXX and lower*	1	-
2	545108901	FUEL TANK ASSY *Serial Number - 201212XXXXX and lower*	1	-
4	578931503	FUEL CAP ASSY *Serial Number - 201213XXXXX and higher*	1	-

Ref.	Article N.	Description	Qty	Kit
5	581337209	TANK *Serial Number - 201213XXXXX and higher*	1	-
6	545173201	IMPELLER *Serial Number - 201414XXXXX and lower*	1	-
7	545164501	WASHER *Serial Number - 201414XXXXX and lower*	1	-
8	545081816	KIT *Serial Number - 201414XXXXX and lower*	1	-
9	581449402	IMPELLER *Serial Number - 201415XXXXX and higher*	1	-
10	545164501	WASHER *Serial Number - 201414XXXXX and lower*	1	-
11	588199401	KIT *Serial Number - 201415XXXXX and higher*	1	-
0	545081816	KIT *Serial Number - 201414XXXXX and lower*	1	-
1	588199401	KIT *Serial Number - 201415XXXXX and higher*	1	-
1	545140201	TUBE -	1	-
2	545118001	TUBE -	1	-
3	545119501	NOZZLE -	1	-
2	545134801	DECAL *Starter Housing*	1	-
4	900000002	DUMMY PART *Not Used*	1	-
6	545081809	KIT *Starting & Warning Decals (North America)*	1	-
7	545081863	KIT *Starting & Warning Decals (Outside North America)*	1	-

SERVICE REFERENCE

***** Service Reference *****

125B & 125BVX MODELS

Note: Due to product improvements, your unit may have a different crankshaft assembly. Please refer to the serial number on your unit and order the appropriate parts shown:

Serial Number - 201414XXXXX and lower, please use the following parts:

ENGINE Ref. #28 545081816 KIT, CRANKSHAFT

Note: KIT, CRANKSHAFT (P/N 545081816) cannot be used with IMPELLER (P/N 581449401). Use only with IMPELLER (P/N 545173201).

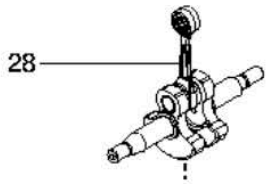

Serial Number - 201415XXXXX and higher, please use the following parts:

ENGINE Ref. #28 588199401 KIT, CRANKSHAFT

Note: KIT, CRANKSHAFT (P/N 588199401) cannot be used with IMPELLER (P/N 545173201). Use only with IMPELLER (P/N 581449401).

Ref.	Article N.	Description	Qty	Kit
1	580502701	MUFFLER -	1	-
3	545081810	KIT -	1	-
4	530058982	BOLT -	2	-

Ref.	Article N.	Description	Qty	Kit
5	530015241	SCREW -	1	-
6	545049301	SWITCH -	1	-
7	545128201	PROTECTOR, SWITCH -	1	-
8	952030249	SPARK PLUG -	1	-
9	587597301	CYLINDER *Chrome*	1	-
10	545132501	BOOT, CARB -	1	-
11	530016187	SCREW -	1	-
12	545133301	PLATE -	1	-
14	590460102	CARBURETTOR KIT -	1	-
15	530047721	PURGE -	1	-
17	545109801	BASE, AIRBOX -	1	-
18	530016101	NUT -	1	-
19	597797901	AIR FILTER -	1	-
20	545109601	COVER -	1	-
21	530059796	KNOB ASSY -	1	-
22	545108202	ASSY, LEADWIRE -	1	-
23	545108101	IGNITION MODULE -	1	-
24	530016456	SCREW -	1	-
25	545081814	PISTON -	1	-
26	575227901	RING -	1	-
27	530015162	CIRCLIP -	1	-
28	900000002	DUMMY PART	1	-

Ref.	Article N.	Description	Qty	Kit
		-		
29	545013401	BEARING -	1	-
30	545081815	KIT -	1	-
32	545068301	BEARING CAP -	1	-
33	530015940	SCREW -	1	-
34	530015897	SCREW -	1	-
35	545081813	GASKET -	1	-
36	545081863	KIT -	1	-
37	599604201	SERVICE KIT -	1	-
1	581337205	TANK *SERIAL 202522XXXXX AND LOWER*	1	-
1	581337215	TANK *SERIAL 202523XXXXX AND HIGHER*	1	-
2	578931503	FUEL CAP ASSY *SERIAL 202522XXXXX AND LOWER, PLEASE VERIFY WHICH IS NEEDED BY COMPARING CAP STYLE*	1	-
3	578931504	FUEL CAP ASSY *SERIAL 202523XXXXX AND HIGHER, PLEASE VERIFY WHICH IS NEEDED BY COMPARING CAP STYLE*	1	-
4	530047721	PURGE	1	-
5	581798001	FUEL HOSE	1	-
6	530095646	FUEL FILTER	1	-
1	545081817	ROPE *Kit - Rope*	1	-
2	545043204	STARTER HANDLE *Handle - Starter*	1	-
3	530015814	SCREW *Screw*	1	-
4	545081822	KIT *Kit - Cruise control*	1	-
5	530015147	WASHER *Washer - Wave*	1	-
6	545111501	RATCHET CRUISE CONTROL *Ratchet - Cruise control*	1	-
7	530015814	SCREW	1	-

Ref.	Article N.	Description	Qty	Kit
		Screw		
8	545119002	HANDLE - ASSIST *Handle - Assist*	1	-
9	545157901	ASSY, MUFFLER GUARD *Assy. - Muffler guard*	1	-
10	545003502	SCREW *Bolt - Tube clamp*	1	-
11	545111301	WIRE *Wire - Linkage*	1	-
12	545111601	TRIGGER *Trigger - Throttle*	1	-
13	545131701	WIRE *Wire - Handle ground*	1	-
14	581449403	IMPELLER	1	-
15	530015197	NUT *Nut - Blower tube*	1	-
16	545111101	SPRING *Spring - Vac door*	1	-
17	545111201	COVER *Cover - Vac door*	1	-
18	530015814	SCREW *Screw*	1	-
19	575533201	ASSEMBLY *Assy - Outer scroll*	1	-
20	545147101	NUT *Nut - Impeller*	1	-
21	900000002	DUMMY PART *Blade - ***See Service Reference****	1	-
22	900000002	DUMMY PART *Washer - ***See Service Reference****	1	-
23	545164501	WASHER *Washer - Impeller*	1	-
24	530016445	SCREW FUEL TANK RETAINER *Screw*	1	-
25	545110001	SCROLL *Scroll - Inner*	1	-
26	530047721	PURGE *Bulb - Purge*	1	-
27	581798001	FUEL HOSE *Fuel Line - ***See Service Reference****	1	-
28	900000002	DUMMY PART *Fuel Cap w Retainer - See Fuel tank page*	1	-
29	530095601	FUEL FILTER	1	-

Ref.	Article N.	Description	Qty	Kit
		30 pcs, plastic bag of 530095646		
29	530095646	FUEL FILTER	1	-
30	900000002	DUMMY PART *Fuel Tank - See Fuel tank page*	1	-
31	530015814	SCREW *Screw*	1	-
32	545132801	SCROLL, FLYWHEEL	1	-
33	530015814	SCREW *Screw*	1	-
34	530016445	SCREW FUEL TANK RETAINER *Screw*	1	-
35	576423301	FLYWHEEL *Assy - Flywheel*	1	-
36	530015828	WASHER *Washer*	1	-
37	530016134	NUT *Nut - Flywheel*	1	-
38	545108801	COVER *Cover - Motor housing*	1	-
39	545112801	SCREW *Screw*	1	-
40	545089001	HUB *Hub*	1	-
41	545115901	SPRING *Spring - EPS2*	1	-
42	545006084	KIT *Kit - Starter*	1	-
43	530042095	SPRING *Spring - Starter*	1	-
44	545111801	STARTER ASSY *Housing - Starter Cover*	1	-
45	530016386	SCREW *Screw*	1	-
14	581449403	IMPELLER	1	-
22	545164501	WASHER	1	-
28	545107605	CRANKSHAFT ASSY	1	-
1	530150350	TANK *Serial Number - 201212XXXXX and lower*	1	-
2	545108901	FUEL TANK ASSY *Serial Number - 201212XXXXX and lower*	1	-
4	578931503	FUEL CAP ASSY *Serial Number - 201213XXXXX and higher*	1	-

Ref.	Article N.	Description	Qty	Kit
5	581337209	TANK *Serial Number - 201213XXXXX and higher*	1	-
6	545173201	IMPELLER *Serial Number - 201414XXXXX and lower*	1	-
7	545164501	WASHER *Serial Number - 201414XXXXX and lower*	1	-
8	545081816	KIT *Serial Number - 201414XXXXX and lower*	1	-
9	581449402	IMPELLER *Serial Number - 201415XXXXX and higher*	1	-
10	545164501	WASHER *Serial Number - 201414XXXXX and lower*	1	-
11	588199401	KIT *Serial Number - 201415XXXXX and higher*	1	-
0	545081816	KIT *Serial Number - 201414XXXXX and lower*	1	-
1	588199401	KIT *Serial Number - 201415XXXXX and higher*	1	-
1	545140201	TUBE -	1	-
2	545118001	TUBE -	1	-
3	545119501	NOZZLE -	1	-
2	545134801	DECAL *Starter Housing*	1	-
4	900000002	DUMMY PART *Not Used*	1	-
6	545081809	KIT *Starting & Warning Decals (North America)*	1	-
7	545081863	KIT *Starting & Warning Decals (Outside North America)*	1	-

TUBE

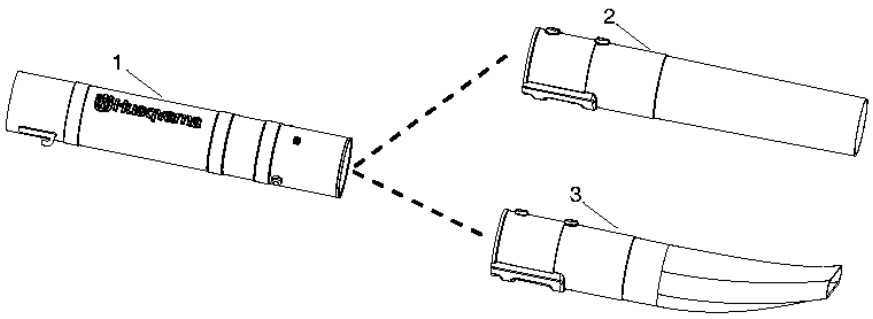

Ref.	Article N.	Description	Qty	Kit
1	580502701	MUFFLER -	1	-
3	545081810	KIT -	1	-
4	530058982	BOLT -	2	-
5	530015241	SCREW -	1	-
6	545049301	SWITCH -	1	-
7	545128201	PROTECTOR, SWITCH -	1	-
8	952030249	SPARK PLUG -	1	-
9	587597301	CYLINDER *Chrome*	1	-
10	545132501	BOOT, CARB -	1	-
11	530016187	SCREW -	1	-
12	545133301	PLATE -	1	-

Ref.	Article N.	Description	Qty	Kit
14	590460102	CARBURETTOR KIT -	1	-
15	530047721	PURGE -	1	-
17	545109801	BASE, AIRBOX -	1	-
18	530016101	NUT -	1	-
19	597797901	AIR FILTER -	1	-
20	545109601	COVER -	1	-
21	530059796	KNOB ASSY -	1	-
22	545108202	ASSY, LEADWIRE -	1	-
23	545108101	IGNITION MODULE -	1	-
24	530016456	SCREW -	1	-
25	545081814	PISTON -	1	-
26	575227901	RING -	1	-
27	530015162	CIRCLIP -	1	-
28	900000002	DUMMY PART -	1	-
29	545013401	BEARING -	1	-
30	545081815	KIT -	1	-
32	545068301	BEARING CAP -	1	-
33	530015940	SCREW -	1	-
34	530015897	SCREW -	1	-
35	545081813	GASKET -	1	-
36	545081863	KIT -	1	-
37	599604201	SERVICE KIT	1	-

Ref.	Article N.	Description	Qty	Kit
		-		
1	581337205	TANK *SERIAL 202522XXXXX AND LOWER*	1	-
1	581337215	TANK *SERIAL 202523XXXXX AND HIGHER*	1	-
2	578931503	FUEL CAP ASSY *SERIAL 202522XXXXX AND LOWER, PLEASE VERIFY WHICH IS NEEDED BY COMPARING CAP STYLE*	1	-
3	578931504	FUEL CAP ASSY *SERIAL 202523XXXXX AND HIGHER, PLEASE VERIFY WHICH IS NEEDED BY COMPARING CAP STYLE*	1	-
4	530047721	PURGE	1	-
5	581798001	FUEL HOSE	1	-
6	530095646	FUEL FILTER	1	-
1	545081817	ROPE *Kit - Rope*	1	-
2	545043204	STARTER HANDLE *Handle - Starter*	1	-
3	530015814	SCREW *Screw*	1	-
4	545081822	KIT *Kit - Cruise control*	1	-
5	530015147	WASHER *Washer - Wave*	1	-
6	545111501	RATCHET CRUISE CONTROL *Ratchet - Cruise control*	1	-
7	530015814	SCREW *Screw*	1	-
8	545119002	HANDLE - ASSIST *Handle - Assist*	1	-
9	545157901	ASSY, MUFFLER GUARD *Assy. - Muffler guard*	1	-
10	545003502	SCREW *Bolt - Tube clamp*	1	-
11	545111301	WIRE *Wire - Linkage*	1	-
12	545111601	TRIGGER *Trigger - Throttle*	1	-
13	545131701	WIRE *Wire - Handle ground*	1	-
14	581449403	IMPELLER	1	-
15	530015197	NUT *Nut - Blower tube*	1	-

Ref.	Article N.	Description	Qty	Kit
16	545111101	SPRING *Spring - Vac door*	1	-
17	545111201	COVER *Cover - Vac door*	1	-
18	530015814	SCREW *Screw*	1	-
19	575533201	ASSEMBLY *Assy - Outer scroll*	1	-
20	545147101	NUT *Nut - Impeller*	1	-
21	900000002	DUMMY PART *Blade - ***See Service Reference****	1	-
22	900000002	DUMMY PART *Washer - ***See Service Reference****	1	-
23	545164501	WASHER *Washer - Impeller*	1	-
24	530016445	SCREW FUEL TANK RETAINER *Screw*	1	-
25	545110001	SCROLL *Scroll - Inner*	1	-
26	530047721	PURGE *Bulb - Purge*	1	-
27	581798001	FUEL HOSE *Fuel Line - ***See Service Reference****	1	-
28	900000002	DUMMY PART *Fuel Cap w Retainer - See Fuel tank page*	1	-
29	530095601	FUEL FILTER *30 pcs, plastic bag of 530095646*	1	-
29	530095646	FUEL FILTER	1	-
30	900000002	DUMMY PART *Fuel Tank - See Fuel tank page*	1	-
31	530015814	SCREW *Screw*	1	-
32	545132801	SCROLL, FLYWHEEL	1	-
33	530015814	SCREW *Screw*	1	-
34	530016445	SCREW FUEL TANK RETAINER *Screw*	1	-
35	576423301	FLYWHEEL *Assy - Flywheel*	1	-
36	530015828	WASHER *Washer*	1	-
37	530016134	NUT	1	-

Ref.	Article N.	Description	Qty	Kit
		Nut - Flywheel		
38	545108801	COVER *Cover - Motor housing*	1	-
39	545112801	SCREW *Screw*	1	-
40	545089001	HUB *Hub*	1	-
41	545115901	SPRING *Spring - EPS2*	1	-
42	545006084	KIT *Kit - Starter*	1	-
43	530042095	SPRING *Spring - Starter*	1	-
44	545111801	STARTER ASSY *Housing - Starter Cover*	1	-
45	530016386	SCREW *Screw*	1	-
14	581449403	IMPELLER	1	-
22	545164501	WASHER	1	-
28	545107605	CRANKSHAFT ASSY	1	-
1	530150350	TANK *Serial Number - 201212XXXXX and lower*	1	-
2	545108901	FUEL TANK ASSY *Serial Number - 201212XXXXX and lower*	1	-
4	578931503	FUEL CAP ASSY *Serial Number - 201213XXXXX and higher*	1	-
5	581337209	TANK *Serial Number - 201213XXXXX and higher*	1	-
6	545173201	IMPELLER *Serial Number - 201414XXXXX and lower*	1	-
7	545164501	WASHER *Serial Number - 201414XXXXX and lower*	1	-
8	545081816	KIT *Serial Number - 201414XXXXX and lower*	1	-
9	581449402	IMPELLER *Serial Number - 201415XXXXX and higher*	1	-
10	545164501	WASHER *Serial Number - 201414XXXXX and lower*	1	-
11	588199401	KIT *Serial Number - 201415XXXXX and higher*	1	-
0	545081816	KIT *Serial Number - 201414XXXXX and lower*	1	-

Ref.	Article N.	Description	Qty	Kit
1	588199401	KIT *Serial Number - 201415XXXXX and higher*	1	-
1	545140201	TUBE -	1	-
2	545118001	TUBE -	1	-
3	545119501	NOZZLE -	1	-
2	545134801	DECAL *Starter Housing*	1	-
4	900000002	DUMMY PART *Not Used*	1	-
6	545081809	KIT *Starting & Warning Decals (North America)*	1	-
7	545081863	KIT *Starting & Warning Decals (Outside North America)*	1	-

DECALS

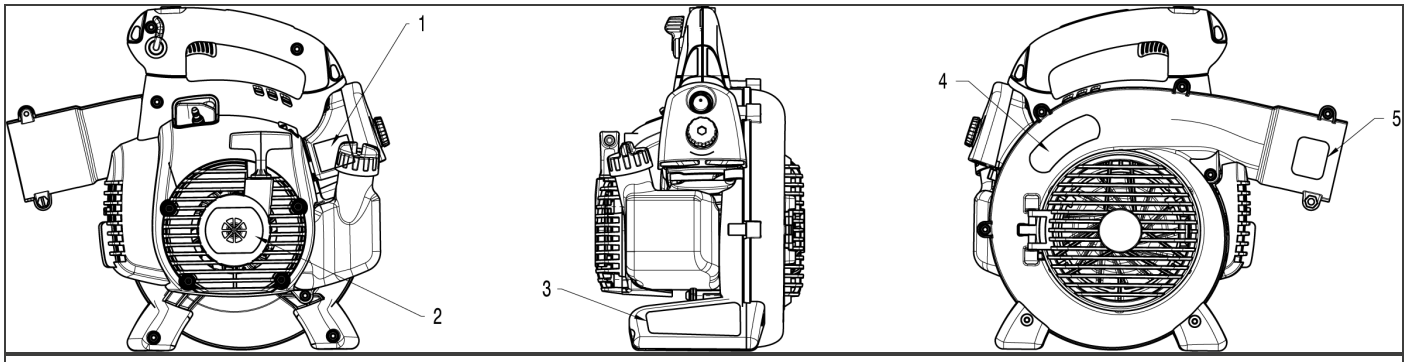

Ref.	Article N.	Description	Qty	Kit
1	580502701	MUFFLER -	1	-
3	545081810	KIT -	1	-
4	530058982	BOLT -	2	-
5	530015241	SCREW -	1	-
6	545049301	SWITCH -	1	-
7	545128201	PROTECTOR, SWITCH -	1	-

Ref.	Article N.	Description	Qty	Kit
8	952030249	SPARK PLUG -	1	-
9	587597301	CYLINDER *Chrome*	1	-
10	545132501	BOOT, CARB -	1	-
11	530016187	SCREW -	1	-
12	545133301	PLATE -	1	-
14	590460102	CARBURETTOR KIT -	1	-
15	530047721	PURGE -	1	-
17	545109801	BASE, AIRBOX -	1	-
18	530016101	NUT -	1	-
19	597797901	AIR FILTER -	1	-
20	545109601	COVER -	1	-
21	530059796	KNOB ASSY -	1	-
22	545108202	ASSY, LEADWIRE -	1	-
23	545108101	IGNITION MODULE -	1	-
24	530016456	SCREW -	1	-
25	545081814	PISTON -	1	-
26	575227901	RING -	1	-
27	530015162	CIRCLIP -	1	-
28	900000002	DUMMY PART -	1	-
29	545013401	BEARING -	1	-
30	545081815	KIT -	1	-
32	545068301	BEARING CAP	1	-

Ref.	Article N.	Description	Qty	Kit
		-		
33	530015940	SCREW -	1	-
34	530015897	SCREW -	1	-
35	545081813	GASKET -	1	-
36	545081863	KIT -	1	-
37	599604201	SERVICE KIT -	1	-
1	581337205	TANK *SERIAL 202522XXXXX AND LOWER*	1	-
1	581337215	TANK *SERIAL 202523XXXXX AND HIGHER*	1	-
2	578931503	FUEL CAP ASSY *SERIAL 202522XXXXX AND LOWER, PLEASE VERIFY WHICH IS NEEDED BY COMPARING CAP STYLE*	1	-
3	578931504	FUEL CAP ASSY *SERIAL 202523XXXXX AND HIGHER, PLEASE VERIFY WHICH IS NEEDED BY COMPARING CAP STYLE*	1	-
4	530047721	PURGE	1	-
5	581798001	FUEL HOSE	1	-
6	530095646	FUEL FILTER	1	-
1	545081817	ROPE *Kit - Rope*	1	-
2	545043204	STARTER HANDLE *Handle - Starter*	1	-
3	530015814	SCREW *Screw*	1	-
4	545081822	KIT *Kit - Cruise control*	1	-
5	530015147	WASHER *Washer - Wave*	1	-
6	545111501	RATCHET CRUISE CONTROL *Ratchet - Cruise control*	1	-
7	530015814	SCREW *Screw*	1	-
8	545119002	HANDLE - ASSIST *Handle - Assist*	1	-
9	545157901	ASSY, MUFFLER GUARD *Assy. - Muffler guard*	1	-
10	545003502	SCREW	1	-

Ref.	Article N.	Description	Qty	Kit
		Bolt - Tube clamp		
11	545111301	WIRE *Wire - Linkage*	1	-
12	545111601	TRIGGER *Trigger - Throttle*	1	-
13	545131701	WIRE *Wire - Handle ground*	1	-
14	581449403	IMPELLER	1	-
15	530015197	NUT *Nut - Blower tube*	1	-
16	545111101	SPRING *Spring - Vac door*	1	-
17	545111201	COVER *Cover - Vac door*	1	-
18	530015814	SCREW *Screw*	1	-
19	575533201	ASSEMBLY *Assy - Outer scroll*	1	-
20	545147101	NUT *Nut - Impeller*	1	-
21	900000002	DUMMY PART *Blade - ***See Service Reference****	1	-
22	900000002	DUMMY PART *Washer - ***See Service Reference****	1	-
23	545164501	WASHER *Washer - Impeller*	1	-
24	530016445	SCREW FUEL TANK RETAINER *Screw*	1	-
25	545110001	SCROLL *Scroll - Inner*	1	-
26	530047721	PURGE *Bulb - Purge*	1	-
27	581798001	FUEL HOSE *Fuel Line - ***See Service Reference****	1	-
28	900000002	DUMMY PART *Fuel Cap w Retainer - See Fuel tank page*	1	-
29	530095601	FUEL FILTER *30 pcs, plastic bag of 530095646*	1	-
29	530095646	FUEL FILTER	1	-
30	900000002	DUMMY PART *Fuel Tank - See Fuel tank page*	1	-
31	530015814	SCREW *Screw*	1	-

Ref.	Article N.	Description	Qty	Kit
32	545132801	SCROLL, FLYWHEEL	1	-
33	530015814	SCREW *Screw*	1	-
34	530016445	SCREW FUEL TANK RETAINER *Screw*	1	-
35	576423301	FLYWHEEL *Assy - Flywheel*	1	-
36	530015828	WASHER *Washer*	1	-
37	530016134	NUT *Nut - Flywheel*	1	-
38	545108801	COVER *Cover - Motor housing*	1	-
39	545112801	SCREW *Screw*	1	-
40	545089001	HUB *Hub*	1	-
41	545115901	SPRING *Spring - EPS2*	1	-
42	545006084	KIT *Kit - Starter*	1	-
43	530042095	SPRING *Spring - Starter*	1	-
44	545111801	STARTER ASSY *Housing - Starter Cover*	1	-
45	530016386	SCREW *Screw*	1	-
14	581449403	IMPELLER	1	-
22	545164501	WASHER	1	-
28	545107605	CRANKSHAFT ASSY	1	-
1	530150350	TANK *Serial Number - 201212XXXXX and lower*	1	-
2	545108901	FUEL TANK ASSY *Serial Number - 201212XXXXX and lower*	1	-
4	578931503	FUEL CAP ASSY *Serial Number - 201213XXXXX and higher*	1	-
5	581337209	TANK *Serial Number - 201213XXXXX and higher*	1	-
6	545173201	IMPELLER *Serial Number - 201414XXXXX and lower*	1	-
7	545164501	WASHER *Serial Number - 201414XXXXX and lower*	1	-

Ref.	Article N.	Description	Qty	Kit
8	545081816	KIT *Serial Number - 201414XXXXX and lower*	1	-
9	581449402	IMPELLER *Serial Number - 201415XXXXX and higher*	1	-
10	545164501	WASHER *Serial Number - 201414XXXXX and lower*	1	-
11	588199401	KIT *Serial Number - 201415XXXXX and higher*	1	-
0	545081816	KIT *Serial Number - 201414XXXXX and lower*	1	-
1	588199401	KIT *Serial Number - 201415XXXXX and higher*	1	-
1	545140201	TUBE -	1	-
2	545118001	TUBE -	1	-
3	545119501	NOZZLE -	1	-
2	545134801	DECAL *Starter Housing*	1	-
4	900000002	DUMMY PART *Not Used*	1	-
6	545081809	KIT *Starting & Warning Decals (North America)*	1	-
7	545081863	KIT *Starting & Warning Decals (Outside North America)*	1	-