Product Catalog: Husqvarna/129L

ENGINE

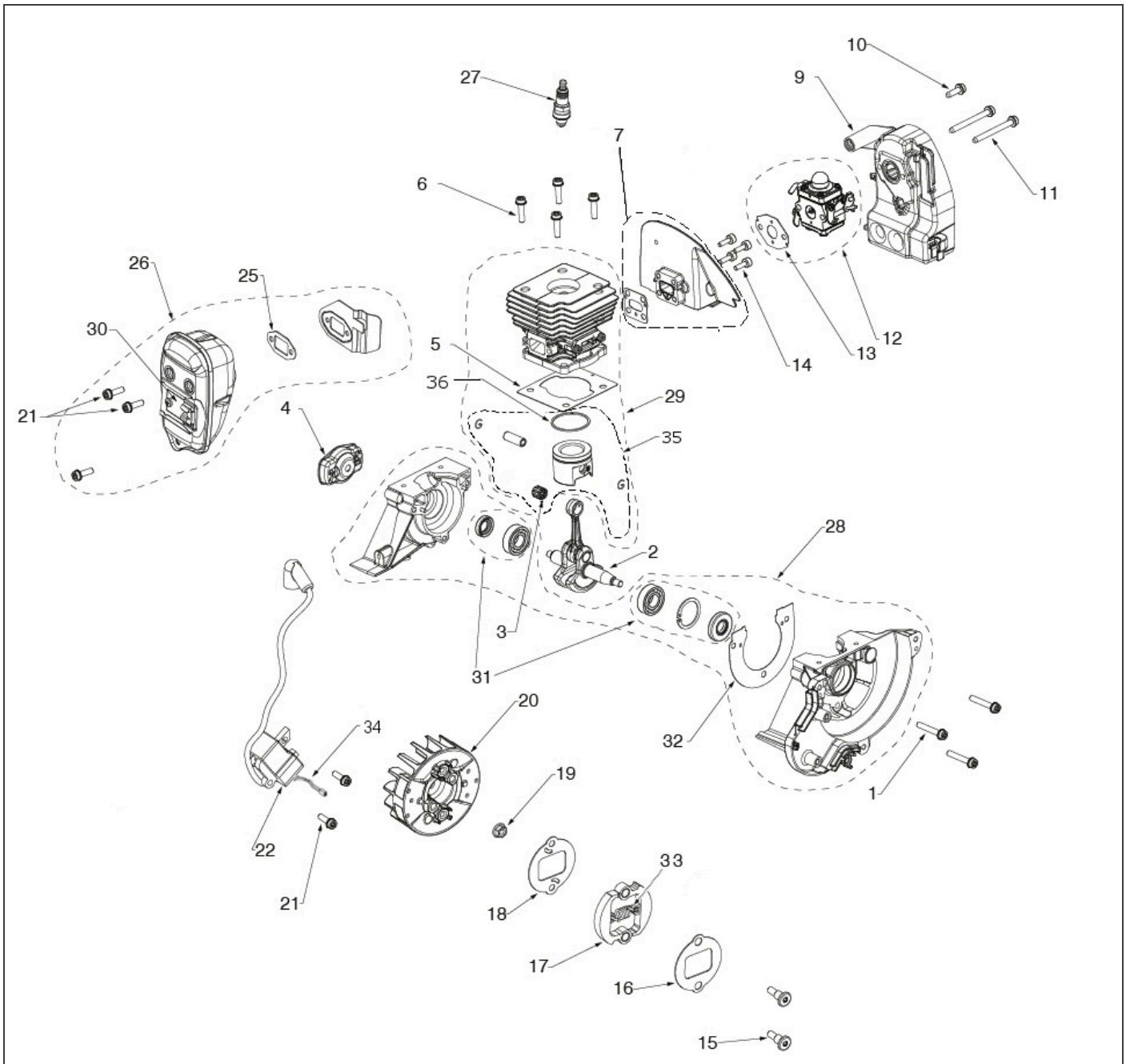

Ref.	Article N.	Description	Qty	Kit
1	525755103	SCREW ITXSCFM -	1	-
2	522928903	CRANKSHAFT ASSY -	1	-
3	589568901	NEEDLE BEARING -	1	-

Ref.	Article N.	Description	Qty	Kit
4	503873305	STARTER PAWL -	1	-
5	579522901	GASKET -	1	-
6	525755102	SCREW ITXSCFM -	1	-
7	579622601	GASKET -	1	-
8	579622501	INSULATION WALL -	1	-
9	580985501	FILTER HOLDER ASSY -	1	-
10	573925801	SCREW ITXSCFT -	1	-
11	573925802	SCREW ITXSCFT -	1	-
12	545008097	KIT *CARBURETOR*	1	-
13	586853301	GASKET -	1	-
13	599604201	SERVICE KIT -	1	-
14	525760906	SCREW ITXSCM -	1	-
15	525615401	SCREW -	1	-
16	525613001	WASHER -	1	-
17	575762202	CLUTCH ASSY *INCL. 33*	1	-
18	525612901	WASHER -	1	-
19	731711651	HEXAGON NUT FLANGE -	1	-
20	510088202	FLYWHEEL -	1	-
21	525755101	SCREW ITXSCFM -	1	-
22	597383401	IGNITION MODULE -	1	-
25	580985801	GASKET -	1	-
26	545008098	KIT	1	-

Ref.	Article N.	Description	Qty	Kit
		MUFFLER		
27	545008093	KIT *SPARK PLUG*	1	-
28	580446632	KIT *CRANKCASE*	1	-
29	591397601	SERVICE KIT *PISTON & CYLINDER*	1	-
30	580446603	KIT *SPARK ARRESTOR*	1	-
31	501856201	SEAL KIT -	1	-
32	579522801	GASKET -	1	-
33	587037001	SPRING -	1	-
34	584993902	SHORT CIRCUIT CABLE -	1	-
35	590553502	SERVICE KIT *PISTON*	1	-
36	579524601	PISTON RING -	1	-
41	580446604	KIT *CARBURETOR GASKET*	1	-
42	545008095	GASKET KIT *GASKET KIT*	1	-
1	537213209	KNOB	1	-
2	524853801	FILTER COVER	1	-
3	574242701	AIR FILTER	1	-
4	574162304	TANK CAP ASSY	1	-
5	545008094	KIT	1	-
6	731231401	HEXAGON NUT	1	-
7	574444001	SCREW ITXSCT	1	-
8	585644901	GUARD	1	-
9	525755104	SCREW ITXSCFM	1	-
10	584993801	CLUTCH COVER ASSY	1	-
11	578426601	CLUTCH DRUM ASSY	1	-
12	524853701	CHOKE BUTTON	1	-
13	574487401	STARTER ASSY	1	-
14	545112801	SCREW *- up to s/n 20254605030*	1	-

Ref.	Article N.	Description	Qty	Kit
14	577226103	SCREW ITXSCT *From s/n 20254605031 - for 574487401 Starter assy*	1	-
15	545008079	KIT-ROPE	1	-
16	575489501	STARTER HANDLE	1	-
17	573925801	SCREW ITXSCFT	1	-
18	525755101	SCREW ITXSCFM	1	-
19	545008096	KIT	1	-
20	585530301	STARTER PULLEY *- up to s/n 20254605030*	1	-
21	545008087	SPRING *- up to s/n 20254605030*	1	-
21	525838301	SPRING *From s/n 20254605031 - for 574487401 Starter assy*	1	-
22	579366201	PULLEY *- up to s/n 20254605030*	1	-
22	525593801	STARTER PULLEY *From s/n 20254605031 - for 574487401 Starter assy*	1	-
23	578465101	SPRING *- up to s/n 20254605030*	1	-
23	525594001	SPRING *From s/n 20254605031 - for 574487401 Starter assy*	1	-
24	574603901	FUEL FILTER	1	-
24	530058783	CLUTCH DRUM	1	-
1	574489003	THROTTLE ASSY *CABLE ONLY*	1	-
1	584994001	SHORT CIRCUIT CABLE -	1	-
2	545223001	THROTTLE -	1	-
3	574444001	SCREW ITXSCT -	1	-
4	584294001	SCREW ITXPANT -	1	-
5	530016454	RETURN SPRING -	1	-
6	574355301	TRIGGER -	1	-
7	574355401	THROTTLE -	1	-
8	545223201	HOUSING -	1	-
9	545049309	SWITCH MOMENTARY	1	-

Ref.	Article N.	Description	Qty	Kit
		-		
10	530015820	SCREW -	1	-
11	545042202	HANDLE *For 967193501*	1	-
11	545042201	HANDLE *For 967192701*	1	-
12	580446612	KIT *For 967192701*	1	-
12	580446608	KIT *For 967193501*	1	-
13	530059185	CLAMP -	1	-
14	530016152	WING NUT -	1	-
15	545007507	SHAFT -	1	-
16	580446606	SHIELD -	1	-
17	530052286	LINE -	1	-
18	584410001	SCREW -	1	-
19	584410101	SCREW -	1	-
20	530057554	BRACKET -	1	-
21	584410501	SCREW -	1	-
22	584410601	SCREW -	1	-
23	575724601	PLUG -	1	-
24	537234901	DRIVER ASSY -	1	-
25	530096295	BEVEL GEAR -	1	-
26	537338306	TRIMMER HEAD -	1	-
29	521533001	SOCKET -	1	-
30	580446607	KIT -	1	-

Ref.	Article N.	Description	Qty	Kit
31	584268701	THROTTLE HANDLE ASSY -	1	-

HOUSING

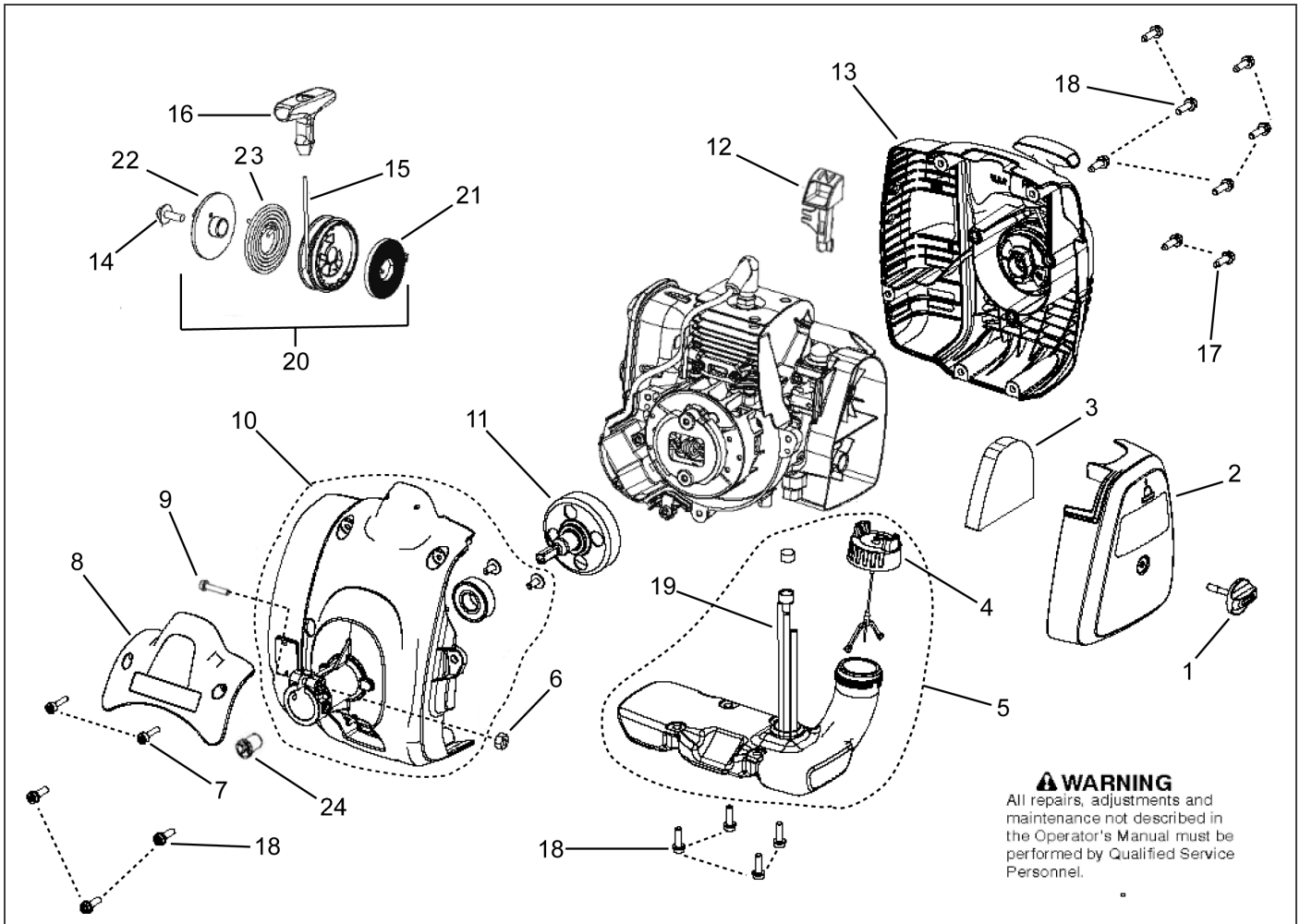

Ref.	Article N.	Description	Qty	Kit
1	525755103	SCREW ITXSCFM -	1	-
2	522928903	CRANKSHAFT ASSY -	1	-
3	589568901	NEEDLE BEARING -	1	-
4	503873305	STARTER PAWL -	1	-
5	579522901	GASKET -	1	-
6	525755102	SCREW ITXSCFM -	1	-

Ref.	Article N.	Description	Qty	Kit
7	579622601	GASKET -	1	-
8	579622501	INSULATION WALL -	1	-
9	580985501	FILTER HOLDER ASSY -	1	-
10	573925801	SCREW ITXSCFT -	1	-
11	573925802	SCREW ITXSCFT -	1	-
12	545008097	KIT *CARBURETOR*	1	-
13	586853301	GASKET -	1	-
13	599604201	SERVICE KIT -	1	-
14	525760906	SCREW ITXSCM -	1	-
15	525615401	SCREW -	1	-
16	525613001	WASHER -	1	-
17	575762202	CLUTCH ASSY *INCL. 33*	1	-
18	525612901	WASHER -	1	-
19	731711651	HEXAGON NUT FLANGE -	1	-
20	510088202	FLYWHEEL -	1	-
21	525755101	SCREW ITXSCFM -	1	-
22	597383401	IGNITION MODULE -	1	-
25	580985801	GASKET -	1	-
26	545008098	KIT *MUFFLER*	1	-
27	545008093	KIT *SPARK PLUG*	1	-
28	580446632	KIT *CRANKCASE*	1	-
29	591397601	SERVICE KIT	1	-

Ref.	Article N.	Description	Qty	Kit
		PISTON & CYLINDER		
30	580446603	KIT *SPARK ARRESTOR*	1	-
31	501856201	SEAL KIT -	1	-
32	579522801	GASKET -	1	-
33	587037001	SPRING -	1	-
34	584993902	SHORT CIRCUIT CABLE -	1	-
35	590553502	SERVICE KIT *PISTON*	1	-
36	579524601	PISTON RING -	1	-
41	580446604	KIT *CARBURETOR GASKET*	1	-
42	545008095	GASKET KIT *GASKET KIT*	1	-
1	537213209	KNOB	1	-
2	524853801	FILTER COVER	1	-
3	574242701	AIR FILTER	1	-
4	574162304	TANK CAP ASSY	1	-
5	545008094	KIT	1	-
6	731231401	HEXAGON NUT	1	-
7	574444001	SCREW ITXSCT	1	-
8	585644901	GUARD	1	-
9	525755104	SCREW ITXSCFM	1	-
10	584993801	CLUTCH COVER ASSY	1	-
11	578426601	CLUTCH DRUM ASSY	1	-
12	524853701	CHOKE BUTTON	1	-
13	574487401	STARTER ASSY	1	-
14	545112801	SCREW *- up to s/n 20254605030*	1	-
14	577226103	SCREW ITXSCT *From s/n 20254605031 - for 574487401 Starter assy*	1	-
15	545008079	KIT-ROPE	1	-
16	575489501	STARTER HANDLE	1	-
17	573925801	SCREW ITXSCFT	1	-
18	525755101	SCREW ITXSCFM	1	-
19	545008096	KIT	1	-

Ref.	Article N.	Description	Qty	Kit
20	585530301	STARTER PULLEY *- up to s/n 20254605030*	1	-
21	545008087	SPRING *- up to s/n 20254605030*	1	-
21	525838301	SPRING *From s/n 20254605031 - for 574487401 Starter assy*	1	-
22	579366201	PULLEY *- up to s/n 20254605030*	1	-
22	525593801	STARTER PULLEY *From s/n 20254605031 - for 574487401 Starter assy*	1	-
23	578465101	SPRING *- up to s/n 20254605030*	1	-
23	525594001	SPRING *From s/n 20254605031 - for 574487401 Starter assy*	1	-
24	574603901	FUEL FILTER	1	-
24	530058783	CLUTCH DRUM	1	-
1	574489003	THROTTLE ASSY *CABLE ONLY*	1	-
1	584994001	SHORT CIRCUIT CABLE -	1	-
2	545223001	THROTTLE -	1	-
3	574444001	SCREW ITXSCT -	1	-
4	584294001	SCREW ITXPANT -	1	-
5	530016454	RETURN SPRING -	1	-
6	574355301	TRIGGER -	1	-
7	574355401	THROTTLE -	1	-
8	545223201	HOUSING -	1	-
9	545049309	SWITCH MOMENTARY -	1	-
10	530015820	SCREW -	1	-
11	545042202	HANDLE *For 967193501*	1	-
11	545042201	HANDLE *For 967192701*	1	-
12	580446612	KIT	1	-

Ref.	Article N.	Description	Qty	Kit
		For 967192701		
12	580446608	KIT *For 967193501*	1	-
13	530059185	CLAMP -	1	-
14	530016152	WING NUT -	1	-
15	545007507	SHAFT -	1	-
16	580446606	SHIELD -	1	-
17	530052286	LINE -	1	-
18	584410001	SCREW -	1	-
19	584410101	SCREW -	1	-
20	530057554	BRACKET -	1	-
21	584410501	SCREW -	1	-
22	584410601	SCREW -	1	-
23	575724601	PLUG -	1	-
24	537234901	DRIVER ASSY -	1	-
25	530096295	BEVEL GEAR -	1	-
26	537338306	TRIMMER HEAD -	1	-
29	521533001	SOCKET -	1	-
30	580446607	KIT -	1	-
31	584268701	THROTTLE HANDLE ASSY -	1	-

SHAFT AND HANDLE

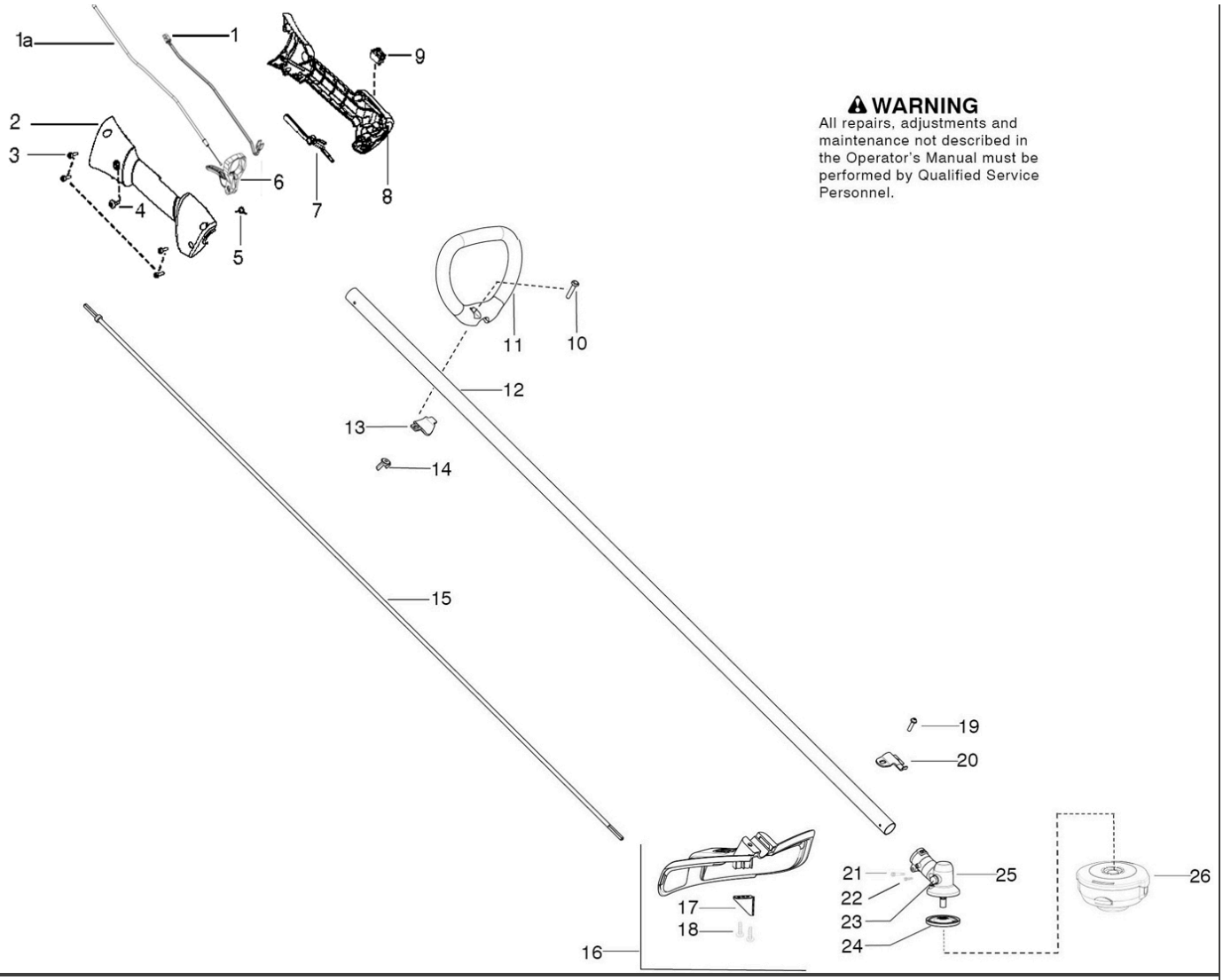

⚠ WARNING
All repairs, adjustments and maintenance not described in the Operator's Manual must be performed by Qualified Service Personnel.

Ref.	Article N.	Description	Qty	Kit
1	525755103	SCREW ITXSCFM -	1	-
2	522928903	CRANKSHAFT ASSY -	1	-
3	589568901	NEEDLE BEARING -	1	-
4	503873305	STARTER PAWL -	1	-
5	579522901	GASKET -	1	-
6	525755102	SCREW ITXSCFM -	1	-
7	579622601	GASKET -	1	-
8	579622501	INSULATION WALL -	1	-
9	580985501	FILTER HOLDER ASSY -	1	-

Ref.	Article N.	Description	Qty	Kit
10	573925801	SCREW ITXSCFT -	1	-
11	573925802	SCREW ITXSCFT -	1	-
12	545008097	KIT *CARBURETOR*	1	-
13	586853301	GASKET -	1	-
13	599604201	SERVICE KIT -	1	-
14	525760906	SCREW ITXSCM -	1	-
15	525615401	SCREW -	1	-
16	525613001	WASHER -	1	-
17	575762202	CLUTCH ASSY *INCL. 33*	1	-
18	525612901	WASHER -	1	-
19	731711651	HEXAGON NUT FLANGE -	1	-
20	510088202	FLYWHEEL -	1	-
21	525755101	SCREW ITXSCFM -	1	-
22	597383401	IGNITION MODULE -	1	-
25	580985801	GASKET -	1	-
26	545008098	KIT *MUFFLER*	1	-
27	545008093	KIT *SPARK PLUG*	1	-
28	580446632	KIT *CRANKCASE*	1	-
29	591397601	SERVICE KIT *PISTON & CYLINDER*	1	-
30	580446603	KIT *SPARK ARRESTOR*	1	-
31	501856201	SEAL KIT -	1	-
32	579522801	GASKET	1	-

Ref.	Article N.	Description	Qty	Kit
		-		
33	587037001	SPRING -	1	-
34	584993902	SHORT CIRCUIT CABLE -	1	-
35	590553502	SERVICE KIT *PISTON*	1	-
36	579524601	PISTON RING -	1	-
41	580446604	KIT *CARBURETOR GASKET*	1	-
42	545008095	GASKET KIT *GASKET KIT*	1	-
1	537213209	KNOB	1	-
2	524853801	FILTER COVER	1	-
3	574242701	AIR FILTER	1	-
4	574162304	TANK CAP ASSY	1	-
5	545008094	KIT	1	-
6	731231401	HEXAGON NUT	1	-
7	574444001	SCREW ITXSCT	1	-
8	585644901	GUARD	1	-
9	525755104	SCREW ITXSCFM	1	-
10	584993801	CLUTCH COVER ASSY	1	-
11	578426601	CLUTCH DRUM ASSY	1	-
12	524853701	CHOKE BUTTON	1	-
13	574487401	STARTER ASSY	1	-
14	545112801	SCREW *- up to s/n 20254605030*	1	-
14	577226103	SCREW ITXSCT *From s/n 20254605031 - for 574487401 Starter assy*	1	-
15	545008079	KIT-ROPE	1	-
16	575489501	STARTER HANDLE	1	-
17	573925801	SCREW ITXSCFT	1	-
18	525755101	SCREW ITXSCFM	1	-
19	545008096	KIT	1	-
20	585530301	STARTER PULLEY *- up to s/n 20254605030*	1	-
21	545008087	SPRING *- up to s/n 20254605030*	1	-
21	525838301	SPRING *From s/n 20254605031 - for 574487401 Starter assy*	1	-

Ref.	Article N.	Description	Qty	Kit
22	579366201	PULLEY *- up to s/n 20254605030*	1	-
22	525593801	STARTER PULLEY *From s/n 20254605031 - for 574487401 Starter assy*	1	-
23	578465101	SPRING *- up to s/n 20254605030*	1	-
23	525594001	SPRING *From s/n 20254605031 - for 574487401 Starter assy*	1	-
24	574603901	FUEL FILTER	1	-
24	530058783	CLUTCH DRUM	1	-
1	574489003	THROTTLE ASSY *CABLE ONLY*	1	-
1	584994001	SHORT CIRCUIT CABLE -	1	-
2	545223001	THROTTLE -	1	-
3	574444001	SCREW ITXSCT -	1	-
4	584294001	SCREW ITXPANT -	1	-
5	530016454	RETURN SPRING -	1	-
6	574355301	TRIGGER -	1	-
7	574355401	THROTTLE -	1	-
8	545223201	HOUSING -	1	-
9	545049309	SWITCH MOMENTARY -	1	-
10	530015820	SCREW -	1	-
11	545042202	HANDLE *For 967193501*	1	-
11	545042201	HANDLE *For 967192701*	1	-
12	580446612	KIT *For 967192701*	1	-
12	580446608	KIT *For 967193501*	1	-
13	530059185	CLAMP -	1	-
14	530016152	WING NUT	1	-

Ref.	Article N.	Description	Qty	Kit
		-		
15	545007507	SHAFT -	1	-
16	580446606	SHIELD -	1	-
17	530052286	LINE -	1	-
18	584410001	SCREW -	1	-
19	584410101	SCREW -	1	-
20	530057554	BRACKET -	1	-
21	584410501	SCREW -	1	-
22	584410601	SCREW -	1	-
23	575724601	PLUG -	1	-
24	537234901	DRIVER ASSY -	1	-
25	530096295	BEVEL GEAR -	1	-
26	537338306	TRIMMER HEAD -	1	-
29	521533001	SOCKET -	1	-
30	580446607	KIT -	1	-
31	584268701	THROTTLE HANDLE ASSY -	1	-