ACCESSORIES

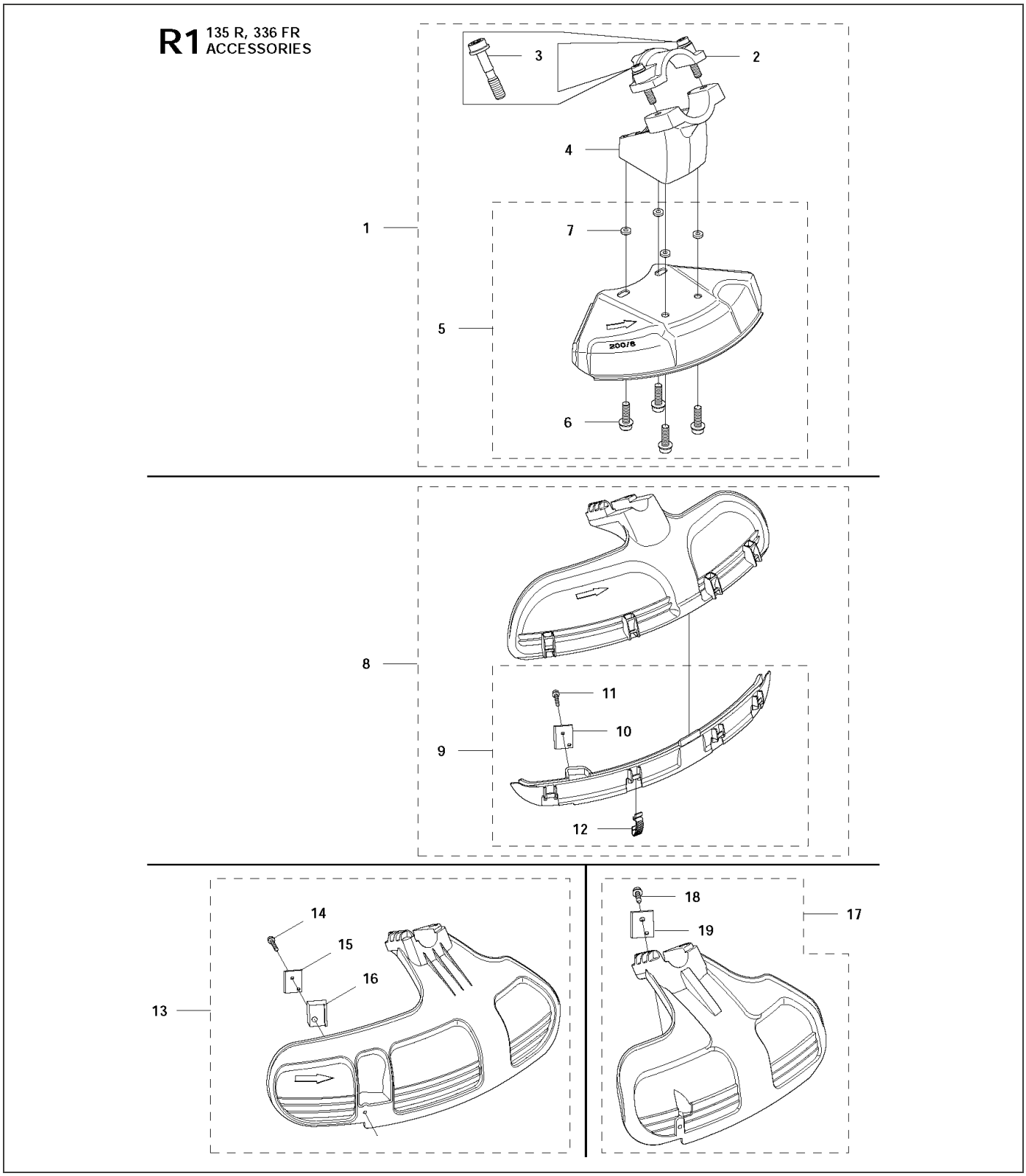

Ref.	Article N.	Description	Qty	Kit
1	501320402	SAW BLADE GUARD -	1	-
2	574530601	CLAMP *Spare part with Captive Screw*	1	-
3	573994304	SCREW IHSCFMO *Captive Screw*	2	-
4	501320801	ADAPTER -	1	-
5	574532601	BLADE GUARD -	1	-
6	503200216	SCREW IHSCFM -	4	-
7	574039501	LOCK NUT -	4	-
8	537331603	SPLASH GUARD -	1	-
9	537396303	SPLASH GUARD -	1	-
10	503798802	BLADE -	1	-
11	503210716	SCREW IHSCT -	1	-
12	537387201	SNAP LOCKING -	4	-
13	537349403	TRIMMER GUARD ASSY -	1	-
14	503216825	SCREW IHSCFT -	1	-
15	503798802	BLADE -	1	-
16	544124501	RETAINER -	1	-
17	502448101	TRIMMER GUARD ASSY -	1	-
18	503216825	SCREW IHSCFT -	1	-
19	503798802	BLADE -	1	-
1	501192201	TOOL -	1	-
2	531009248	FILTER OIL -	1	-
3	503976501	GREASE	1	-

Ref.	Article N.	Description	Qty	Kit
		-		
4	502285901	STOP -	1	-
5	503801701	GREASE -	1	-
6	537362102	COMBINATION WRENCH -	1	-
7	544359101	TRANSPORT GUARD -	1	-
8	537312901	TRANSPORT GUARD -	1	-
9	503890102	SUPPORT CUP -	1	-
10	537216201	HARNESS -	1	-
10	537216202	HARNESS *USA*	1	-
1	544216401	GEAR -	1	-
2	537295902	GEAR HOUSING -	1	-
3	738219900	BALL BEARING -	1	-
4	505133301	SPARE PARTS KIT -	1	-
5	503252801	BALL BEARING -	1	-
6	735313110	CIRCLIP -	1	-
7	738210110	BALL BEARING -	1	-
8	738210112	BALL BEARING -	1	-
9	735311400	CIRCLIP -	1	-
10	735312810	CIRCLIP -	1	-
11	537147401	MAGNET -	1	-
12	503201501	SCREW -	1	-
13	574306801	CLAMP -	1	-

Ref.	Article N.	Description	Qty	Kit
14	544087601	CLAMP -	1	-
15	537189501	SCREW -	1	-
16	732211601	LOCK NUT -	1	-
17	503200210	SCREW IHSCFM -	1	-
18	574039501	LOCK NUT -	1	-
19	537351402	DRIVER -	1	-
20	537343501	SUPPORT FLANGE -	1	-
21	502291101	BLADE NUT -	1	-
22	503200325	SCREW IHSCFM -	2	-
1	537334301	INLET PIPE -	1	-
2	537371202	INSULATION WALL -	1	-
3	537371101	SLEEVE -	1	-
4	544019101	TUBULAR RIVET -	1	-
5	537373803	TUBULAR RIVET -	2	-
6	503200316	SCREW IHSCFM -	2	-
7	537341301	AIR DUCT -	1	-
8	575729001	CARBURETTOR *Zama C1Q-EL45*	1	-
9	503217550	SCREW IHSCFT -	2	-
10	503497101	GASKET -	1	-
11	537349001	LEVER -	1	-
12	544372701	SLEEVING BRACKET -	1	-
13	575841801	FILTER COVER	1	-

Ref.	Article N.	Description	Qty	Kit
		-		
14	537213209	KNOB -	1	-
15	575863702	FILTER HOLDER ASSY -	1	-
16	503212906	SCREW CCRPANT -	2	-
17	575841501	CHOKE CONTROL -	1	-
18	575841602	CHOKE LEVER -	1	-
19	544014601	LEVER -	1	-
20	544014701	BELLOWS -	1	-
21	544025801	BAR -	1	-
22	503231006	WASHER -	1	-
23	576215301	FILTER -	1	-
24	575863801	FRAME -	1	-
25	503200320	SCREW IHSCFM -	1	-
1	575729001	CARBURETTOR *Zama C1Q-EL45*	1	-
2	503479201	SCREW -	1	-
3	537417201	VALVE -	1	-
4	544372401	SPRING -	1	-
5	503480501	SCREW -	1	-
6	503974301	COVER -	1	-
7	504105601	DIAPHRAGM -	1	-
8	537020401	GASKET -	1	-
9	537387301	NOZZLE ASSY -	1	-

Ref.	Article N.	Description	Qty	Kit
10	503480101	SCREW -	1	-
11	503480001	PIN RETAINING SCREW -	1	-
12	503665901	LEVER -	1	-
13	503479701	VALVE -	1	-
14	537020301	SPRING -	1	-
15	501327101	SHAFT ASSY -	1	-
16	537370301	VALVE -	1	-
17	503481801	SCREW -	1	-
18	544372601	SPRING -	1	-
19	544372501	LEVER -	1	-
20	544427001	COLLAR -	1	-
21	504102701	SHAFT ASSY -	1	-
22	537012601	SPRING -	1	-
23	537012501	BALL -	1	-
24	503481301	STRAINER -	1	-
25	503479001	SCREW -	1	-
26	537416901	SCREW -	1	-
27	537417001	LIMITER CAP -	1	-
28	537387501	SCREW -	1	-
29	537385201	CLIP -	1	-
30	576270201	THROTTLE LEVER -	1	-
31	537020001	DIAPHRAGM PUMP	1	-

Ref.	Article N.	Description	Qty	Kit
		-		
32	537020101	GASKET -	1	-
33	537020201	COVER -	1	-
34	537020701	SCREW -	1	-
35	503481101	PIECE -	1	-
36	503479601	SCREW -	1	-
37	531004552	GASKET KIT *Set of gaskets*	1	-
1	574842901	CLUTCH COVER ASSY -	1	-
2	735312810	CIRCLIP -	1	-
3	738210104	BALL BEARING -	1	-
4	503240702	PARALLEL PIN -	2	-
5	537352901	CLUTCH DRUM -	1	-
6	735311400	CIRCLIP -	1	-
7	537340401	CLUTCH -	1	-
8	537427201	SPRING -	1	-
9	537046801	WASHER -	1	-
10	537415701	WASHER -	1	-
11	537418101	SCREW -	2	-
12	503217411	SCREW IHSCT -	1	-
13	537322701	ANTIVIBRATION ELEMENT -	1	-
14	537310101	COMPRESSION SLEEVE -	1	-
15	725533355	SCREW IHSCM -	1	-

Ref.	Article N.	Description	Qty	Kit
16	575865801	COVER -	1	-
17	503200320	SCREW IHSCFM -	3	-
18	537418101	SCREW -	3	-
1	585382201	CRANKCASE ASSY -	1	-
2	738210110	BALL BEARING -	2	-
3	503260202	SEALING RING -	2	-
4	593777601	GASKET -	1	-
5	503200230	SCREW IHSCFM -	4	-
6	593806001	GUIDE BUSHING -	2	-
7	537324201	INSERT -	1	-
1	575865002	CYLINDER COVER ASSY *Spare part with Captive Screw*	1	-
2	573994305	SCREW IHSCFMO *Captiv Screw*	1	-
3	575865701	PROTECTIVE PLATE *336 FR*	1	-
4	503200302	SCREW IHSCFM -	1	-
5	575864801	MUFFLER GUARD *Spare part with Captive Screw*	1	-
6	574477003	SCREW IHSCFMO *Captiv Screw*	2	-
7	576998614	LABEL *336 FR*	1	-
8	576998615	LABEL *135 R*	1	-
9	577231101	DAMPER *135 R*	1	-
1	574364301	CYLINDER ASSY	1	-
2	585998302	PISTON ASSY	1	-
3	503289054	PISTON RING	2	-
4	503289119	PISTON PIN	1	-

Ref.	Article N.	Description	Qty	Kit
5	737441000	SNAP RING	2	-
6	503255501	NEEDLE BEARING	1	-
7	725533355	SCREW IHSCM	4	-
1	544328801	TANK ASSY -	1	-
2	503911001	SUSPENSION -	4	-
3	590324801	TANK CAP ASSY -	1	-
4	503936601	PURGE -	1	-
5	537042412	FUEL HOSE -	2	-
6	537052301	FUEL HOSE -	1	-
7	503735801	BUSHING -	2	-
8	537184901	O-RING -	1	-
9	503443201	FUEL FILTER -	1	-
1	537275702	HARNESS -	1	-
1	537275704	HARNESS *US*	1	-
2	537288301	BUCKLE -	1	-
3	537288401	BUCKLE -	1	-
4	537275901	HIP PAD -	1	-
5	502022801	HOOK -	1	-
6	502022902	HOOK -	1	-
7	502023002	LOCK -	1	-
8	586341001	SPRING -	1	-
9	735310920	E-CLIP -	1	-
10	503996101	BAND -	3	-

Ref.	Article N.	Description	Qty	Kit
11	537113501	RETAINER -	1	-
12	503996103	BAND -	1	-
1	537249601	FLYWHEEL -	1	-
2	731711651	HEXAGON NUT FLANGE -	1	-
3	544127001	IGNITION MODULE -	1	-
4	503202516	SCREW IHSCM -	2	-
5	503235109	SPARK PLUG -	1	-
6	537239301	CONTACT SPRING -	1	-
1	505408601	MUFFLER ASSY *CAT*	1	-
2	544116801	SPARK ARRESTER SCREEN -	1	-
3	724128759	SCREW CRPANM -	1	-
4	537333101	GASKET -	1	-
5	537340801	AIR CONDUCTOR -	1	-
6	503202963	SCREW IHSCFM -	2	-
7	503200320	SCREW IHSCFM -	1	-
1	501919701	TUBE ASSY -	1	-
2	537214101	TUBE -	1	-
3	537313901	GUIDE -	1	-
4	537360201	SPACER -	1	-
5	537360202	SPACER -	1	-
6	544183201	DRIVE SHAFT -	1	-
7	537130403	KNOB	1	-

Ref.	Article N.	Description	Qty	Kit
		-		
8	725233151	SCREW -	1	-
9	505161001	LOOP -	1	-
10	537350101	LOOP -	1	-
11	503217516	SCREW IHSCFT -	1	-
12	537376101	WIRING -	1	-
13	589295101	LABEL -	1	-
1	594729101	SHORT BLOCK ASSY *Assembled*	1	-
1	575840801	STARTER ASSY -	1	-
2	575840901	STARTER HOUSING *Spare part adapted for captive screw*	1	-
3	537325003	STARTER PULLEY -	1	-
4	503859901	RECOIL SPRING -	1	-
5	503218876	SCREW IHSCT -	1	-
6	503230080	WASHER -	1	-
7	537232501	STARTER HANDLE -	1	-
8	505305125	STARTER ROPE -	1	-
9	573994305	SCREW IHSCFMO *Captive screw*	3	-
10	577223601	DECAL -	1	-
11	503873305	STARTER PAWL -	1	-
12	503873502	STARTER PAWL -	2	-
13	503873601	SPRING -	2	-
14	735310820	E-CLIP -	2	-

Ref.	Article N.	Description	Qty	Kit
1	537424507	HANDLE SYSTEM -	1	-
2	537160203	HANDLE HALF *HARD GRIP, GREY*	1	-
2	537160209	HANDLE HALF *SOFT GRIP, GREY + BLACK TPE*	1	-
3	537160301	HANDLE HALF *HARD GRIP, GREY*	1	-
3	537160302	HANDLE HALF *SOFT GRIP, GREY + BLACK TPE*	1	-
4	503221013	HEXAGON NUT -	1	-
5	537359602	WIRING ASSY -	1	-
6	537377801	THROTTLE CABLE ASSY -	1	-
7	503216618	SCREW IHSCT -	1	-
8	503878507	SHORT CIRCUIT CABLE -	1	-
9	537419001	SWITCH -	1	-
10	506497701	THROTTLE CONTROL -	1	-
11	537174201	SPRING -	1	-
12	537160701	THROTTLE LOCKOUT -	1	-
13	537174301	SPRING -	1	-
14	503216618	SCREW IHSCT -	2	-
15	503200735	SCREW IHSCFM -	1	-
16	502199503	HANDLEBAR -	1	-
17	537172801	HANDLE -	1	-
18	537172901	COVER -	1	-
19	731231401	HEXAGON NUT -	1	-
20	503200245	SCREW IHSCFM	1	-

Ref.	Article N.	Description	Qty	Kit
		-		
21	503750002	HANDLEBAR BRACKET -	1	-
22	502211201	STAPLE -	1	-
1	576277401	HANDLEBAR BRACKET -	1	-
2	731231401	HEXAGON NUT -	4	-
3	502197101	SQUARE NUT -	1	-
4	502286101	CLIP -	1	-
5	502203801	KNOB -	1	-
6	725238351	SCREW EHHM -	1	-
7	576220101	COVER -	1	-
8	576220001	LID -	1	-
9	503200778	SCREW IHSCFM -	4	-
1	536805601	CRANKSHAFT ASSY	1	-
2	503260202	SEALING RING	2	-
3	738210110	BALL BEARING	2	-
4	503255501	NEEDLE BEARING	1	-

ACCESSORIES

R2 135 R, 336 FR ACCESSORIES

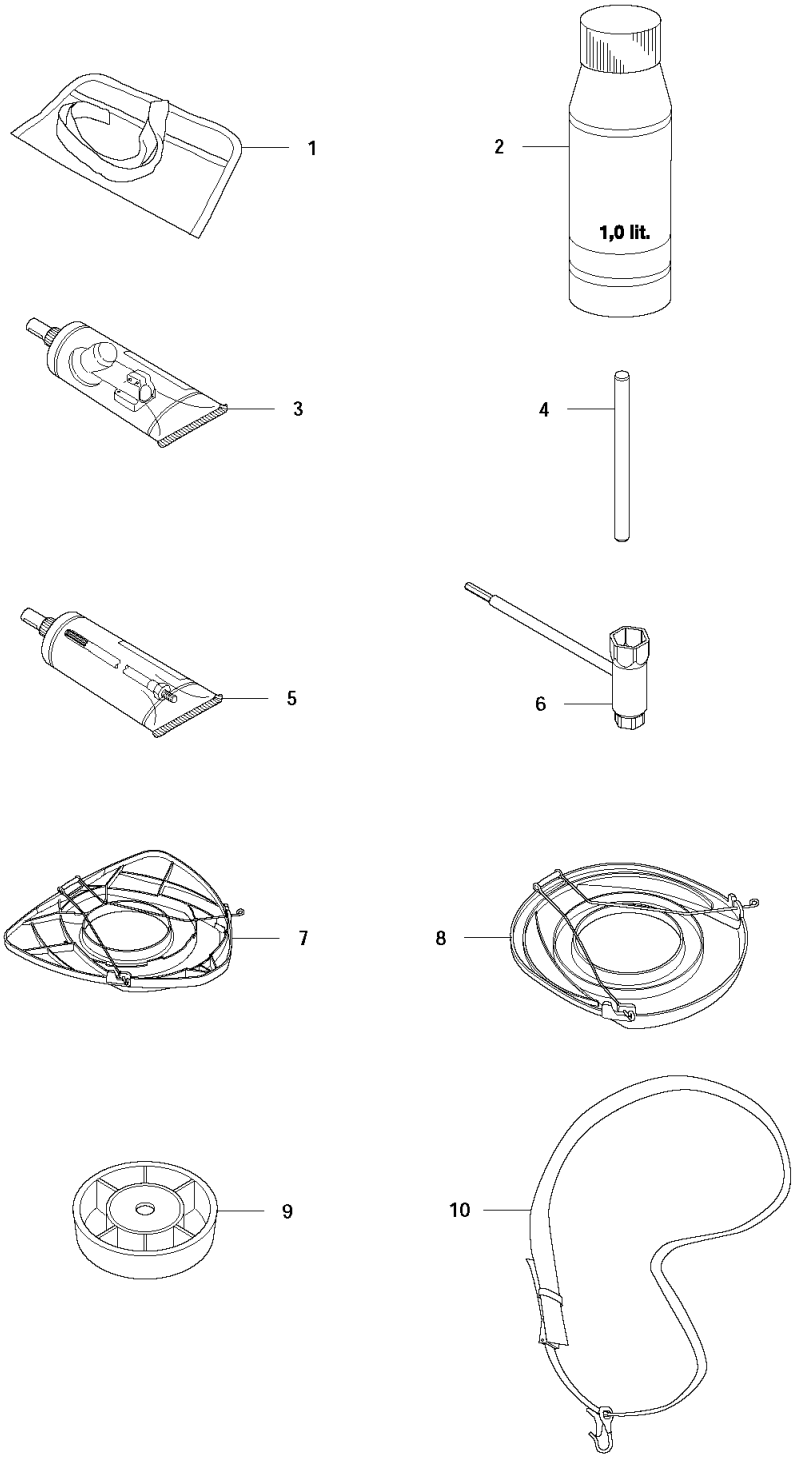

Ref.	Article N.	Description	Qty	Kit
1	501320402	SAW BLADE GUARD -	1	-
2	574530601	CLAMP *Spare part with Captive Screw*	1	-
3	573994304	SCREW IHSCFMO *Captive Screw*	2	-

Ref.	Article N.	Description	Qty	Kit
4	501320801	ADAPTER -	1	-
5	574532601	BLADE GUARD -	1	-
6	503200216	SCREW IHSCFM -	4	-
7	574039501	LOCK NUT -	4	-
8	537331603	SPLASH GUARD -	1	-
9	537396303	SPLASH GUARD -	1	-
10	503798802	BLADE -	1	-
11	503210716	SCREW IHSCT -	1	-
12	537387201	SNAP LOCKING -	4	-
13	537349403	TRIMMER GUARD ASSY -	1	-
14	503216825	SCREW IHSCFT -	1	-
15	503798802	BLADE -	1	-
16	544124501	RETAINER -	1	-
17	502448101	TRIMMER GUARD ASSY -	1	-
18	503216825	SCREW IHSCFT -	1	-
19	503798802	BLADE -	1	-
1	501192201	TOOL -	1	-
2	531009248	FILTER OIL -	1	-
3	503976501	GREASE -	1	-
4	502285901	STOP -	1	-
5	503801701	GREASE -	1	-
6	537362102	COMBINATION WRENCH	1	-

Ref.	Article N.	Description	Qty	Kit
		-		
7	544359101	TRANSPORT GUARD -	1	-
8	537312901	TRANSPORT GUARD -	1	-
9	503890102	SUPPORT CUP -	1	-
10	537216201	HARNESS -	1	-
10	537216202	HARNESS *USA*	1	-
1	544216401	GEAR -	1	-
2	537295902	GEAR HOUSING -	1	-
3	738219900	BALL BEARING -	1	-
4	505133301	SPARE PARTS KIT -	1	-
5	503252801	BALL BEARING -	1	-
6	735313110	CIRCLIP -	1	-
7	738210110	BALL BEARING -	1	-
8	738210112	BALL BEARING -	1	-
9	735311400	CIRCLIP -	1	-
10	735312810	CIRCLIP -	1	-
11	537147401	MAGNET -	1	-
12	503201501	SCREW -	1	-
13	574306801	CLAMP -	1	-
14	544087601	CLAMP -	1	-
15	537189501	SCREW -	1	-
16	732211601	LOCK NUT -	1	-

Ref.	Article N.	Description	Qty	Kit
17	503200210	SCREW IHSCFM -	1	-
18	574039501	LOCK NUT -	1	-
19	537351402	DRIVER -	1	-
20	537343501	SUPPORT FLANGE -	1	-
21	502291101	BLADE NUT -	1	-
22	503200325	SCREW IHSCFM -	2	-
1	537334301	INLET PIPE -	1	-
2	537371202	INSULATION WALL -	1	-
3	537371101	SLEEVE -	1	-
4	544019101	TUBULAR RIVET -	1	-
5	537373803	TUBULAR RIVET -	2	-
6	503200316	SCREW IHSCFM -	2	-
7	537341301	AIR DUCT -	1	-
8	575729001	CARBURETTOR *Zama C1Q-EL45*	1	-
9	503217550	SCREW IHSCFT -	2	-
10	503497101	GASKET -	1	-
11	537349001	LEVER -	1	-
12	544372701	SLEEVING BRACKET -	1	-
13	575841801	FILTER COVER -	1	-
14	537213209	KNOB -	1	-
15	575863702	FILTER HOLDER ASSY -	1	-
16	503212906	SCREW CCRPANT	2	-

Ref.	Article N.	Description	Qty	Kit
		-		
17	575841501	CHOKE CONTROL -	1	-
18	575841602	CHOKE LEVER -	1	-
19	544014601	LEVER -	1	-
20	544014701	BELLOWS -	1	-
21	544025801	BAR -	1	-
22	503231006	WASHER -	1	-
23	576215301	FILTER -	1	-
24	575863801	FRAME -	1	-
25	503200320	SCREW IHSCFM -	1	-
1	575729001	CARBURETTOR *Zama C1Q-EL45*	1	-
2	503479201	SCREW -	1	-
3	537417201	VALVE -	1	-
4	544372401	SPRING -	1	-
5	503480501	SCREW -	1	-
6	503974301	COVER -	1	-
7	504105601	DIAPHRAGM -	1	-
8	537020401	GASKET -	1	-
9	537387301	NOZZLE ASSY -	1	-
10	503480101	SCREW -	1	-
11	503480001	PIN RETAINING SCREW -	1	-
12	503665901	LEVER -	1	-

Ref.	Article N.	Description	Qty	Kit
13	503479701	VALVE -	1	-
14	537020301	SPRING -	1	-
15	501327101	SHAFT ASSY -	1	-
16	537370301	VALVE -	1	-
17	503481801	SCREW -	1	-
18	544372601	SPRING -	1	-
19	544372501	LEVER -	1	-
20	544427001	COLLAR -	1	-
21	504102701	SHAFT ASSY -	1	-
22	537012601	SPRING -	1	-
23	537012501	BALL -	1	-
24	503481301	STRAINER -	1	-
25	503479001	SCREW -	1	-
26	537416901	SCREW -	1	-
27	537417001	LIMITER CAP -	1	-
28	537387501	SCREW -	1	-
29	537385201	CLIP -	1	-
30	576270201	THROTTLE LEVER -	1	-
31	537020001	DIAPHRAGM PUMP -	1	-
32	537020101	GASKET -	1	-
33	537020201	COVER -	1	-
34	537020701	SCREW	1	-

Ref.	Article N.	Description	Qty	Kit
		-		
35	503481101	PIECE -	1	-
36	503479601	SCREW -	1	-
37	531004552	GASKET KIT *Set of gaskets*	1	-
1	574842901	CLUTCH COVER ASSY -	1	-
2	735312810	CIRCLIP -	1	-
3	738210104	BALL BEARING -	1	-
4	503240702	PARALLEL PIN -	2	-
5	537352901	CLUTCH DRUM -	1	-
6	735311400	CIRCLIP -	1	-
7	537340401	CLUTCH -	1	-
8	537427201	SPRING -	1	-
9	537046801	WASHER -	1	-
10	537415701	WASHER -	1	-
11	537418101	SCREW -	2	-
12	503217411	SCREW IHSCT -	1	-
13	537322701	ANTIVIBRATION ELEMENT -	1	-
14	537310101	COMPRESSION SLEEVE -	1	-
15	725533355	SCREW IHSCM -	1	-
16	575865801	COVER -	1	-
17	503200320	SCREW IHSCFM -	3	-
18	537418101	SCREW -	3	-

Ref.	Article N.	Description	Qty	Kit
1	585382201	CRANKCASE ASSY -	1	-
2	738210110	BALL BEARING -	2	-
3	503260202	SEALING RING -	2	-
4	593777601	GASKET -	1	-
5	503200230	SCREW IHSCFM -	4	-
6	593806001	GUIDE BUSHING -	2	-
7	537324201	INSERT -	1	-
1	575865002	CYLINDER COVER ASSY *Spare part with Captive Screw*	1	-
2	573994305	SCREW IHSCFMO *Captiv Screw*	1	-
3	575865701	PROTECTIVE PLATE *336 FR*	1	-
4	503200302	SCREW IHSCFM -	1	-
5	575864801	MUFFLER GUARD *Spare part with Captive Screw*	1	-
6	574477003	SCREW IHSCFMO *Captiv Screw*	2	-
7	576998614	LABEL *336 FR*	1	-
8	576998615	LABEL *135 R*	1	-
9	577231101	DAMPER *135 R*	1	-
1	574364301	CYLINDER ASSY	1	-
2	585998302	PISTON ASSY	1	-
3	503289054	PISTON RING	2	-
4	503289119	PISTON PIN	1	-
5	737441000	SNAP RING	2	-
6	503255501	NEEDLE BEARING	1	-
7	725533355	SCREW IHSCM	4	-
1	544328801	TANK ASSY -	1	-
2	503911001	SUSPENSION	4	-

Ref.	Article N.	Description	Qty	Kit
		-		
3	590324801	TANK CAP ASSY -	1	-
4	503936601	PURGE -	1	-
5	537042412	FUEL HOSE -	2	-
6	537052301	FUEL HOSE -	1	-
7	503735801	BUSHING -	2	-
8	537184901	O-RING -	1	-
9	503443201	FUEL FILTER -	1	-
1	537275702	HARNESS -	1	-
1	537275704	HARNESS *US*	1	-
2	537288301	BUCKLE -	1	-
3	537288401	BUCKLE -	1	-
4	537275901	HIP PAD -	1	-
5	502022801	HOOK -	1	-
6	502022902	HOOK -	1	-
7	502023002	LOCK -	1	-
8	586341001	SPRING -	1	-
9	735310920	E-CLIP -	1	-
10	503996101	BAND -	3	-
11	537113501	RETAINER -	1	-
12	503996103	BAND -	1	-
1	537249601	FLYWHEEL -	1	-

Ref.	Article N.	Description	Qty	Kit
2	731711651	HEXAGON NUT FLANGE -	1	-
3	544127001	IGNITION MODULE -	1	-
4	503202516	SCREW IHSCM -	2	-
5	503235109	SPARK PLUG -	1	-
6	537239301	CONTACT SPRING -	1	-
1	505408601	MUFFLER ASSY *CAT*	1	-
2	544116801	SPARK ARRESTER SCREEN -	1	-
3	724128759	SCREW CRPANM -	1	-
4	537333101	GASKET -	1	-
5	537340801	AIR CONDUCTOR -	1	-
6	503202963	SCREW IHSCFM -	2	-
7	503200320	SCREW IHSCFM -	1	-
1	501919701	TUBE ASSY -	1	-
2	537214101	TUBE -	1	-
3	537313901	GUIDE -	1	-
4	537360201	SPACER -	1	-
5	537360202	SPACER -	1	-
6	544183201	DRIVE SHAFT -	1	-
7	537130403	KNOB -	1	-
8	725233151	SCREW -	1	-
9	505161001	LOOP -	1	-
10	537350101	LOOP	1	-

Ref.	Article N.	Description	Qty	Kit
		-		
11	503217516	SCREW IHSCFT -	1	-
12	537376101	WIRING -	1	-
13	589295101	LABEL -	1	-
1	594729101	SHORT BLOCK ASSY *Assembled*	1	-
1	575840801	STARTER ASSY -	1	-
2	575840901	STARTER HOUSING *Spare part adapted for captive screw*	1	-
3	537325003	STARTER PULLEY -	1	-
4	503859901	RECOIL SPRING -	1	-
5	503218876	SCREW IHSCT -	1	-
6	503230080	WASHER -	1	-
7	537232501	STARTER HANDLE -	1	-
8	505305125	STARTER ROPE -	1	-
9	573994305	SCREW IHSCFMO *Captive screw*	3	-
10	577223601	DECAL -	1	-
11	503873305	STARTER PAWL -	1	-
12	503873502	STARTER PAWL -	2	-
13	503873601	SPRING -	2	-
14	735310820	E-CLIP -	2	-
1	537424507	HANDLE SYSTEM -	1	-
2	537160203	HANDLE HALF *HARD GRIP, GREY*	1	-
2	537160209	HANDLE HALF *SOFT GRIP, GREY + BLACK TPE*	1	-

Ref.	Article N.	Description	Qty	Kit
3	537160301	HANDLE HALF *HARD GRIP, GREY*	1	-
3	537160302	HANDLE HALF *SOFT GRIP, GREY + BLACK TPE*	1	-
4	503221013	HEXAGON NUT -	1	-
5	537359602	WIRING ASSY -	1	-
6	537377801	THROTTLE CABLE ASSY -	1	-
7	503216618	SCREW IHSCT -	1	-
8	503878507	SHORT CIRCUIT CABLE -	1	-
9	537419001	SWITCH -	1	-
10	506497701	THROTTLE CONTROL -	1	-
11	537174201	SPRING -	1	-
12	537160701	THROTTLE LOCKOUT -	1	-
13	537174301	SPRING -	1	-
14	503216618	SCREW IHSCT -	2	-
15	503200735	SCREW IHSCFM -	1	-
16	502199503	HANDLEBAR -	1	-
17	537172801	HANDLE -	1	-
18	537172901	COVER -	1	-
19	731231401	HEXAGON NUT -	1	-
20	503200245	SCREW IHSCFM -	1	-
21	503750002	HANDLEBAR BRACKET -	1	-
22	502211201	STAPLE -	1	-
1	576277401	HANDLEBAR BRACKET	1	-

Ref.	Article N.	Description	Qty	Kit
		-		
2	731231401	HEXAGON NUT -	4	-
3	502197101	SQUARE NUT -	1	-
4	502286101	CLIP -	1	-
5	502203801	KNOB -	1	-
6	725238351	SCREW EHHM -	1	-
7	576220101	COVER -	1	-
8	576220001	LID -	1	-
9	503200778	SCREW IHSCFM -	4	-
1	536805601	CRANKSHAFT ASSY	1	-
2	503260202	SEALING RING	2	-
3	738210110	BALL BEARING	2	-
4	503255501	NEEDLE BEARING	1	-

BEVEL GEAR

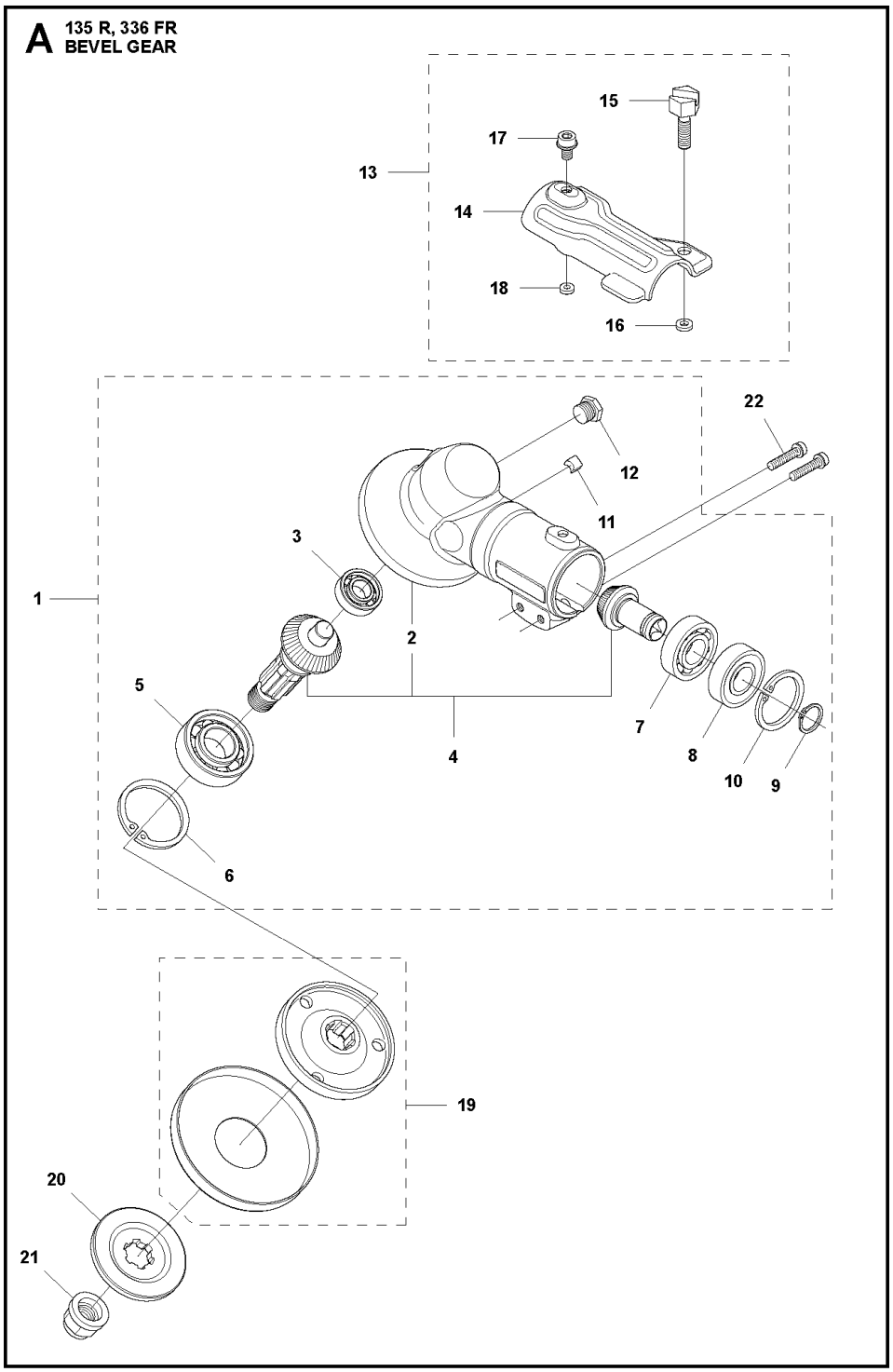

Ref.	Article N.	Description	Qty	Kit
1	501320402	SAW BLADE GUARD -	1	-
2	574530601	CLAMP *Spare part with Captive Screw*	1	-
3	573994304	SCREW IHSCFMO *Captive Screw*	2	-

Ref.	Article N.	Description	Qty	Kit
4	501320801	ADAPTER -	1	-
5	574532601	BLADE GUARD -	1	-
6	503200216	SCREW IHSCFM -	4	-
7	574039501	LOCK NUT -	4	-
8	537331603	SPLASH GUARD -	1	-
9	537396303	SPLASH GUARD -	1	-
10	503798802	BLADE -	1	-
11	503210716	SCREW IHSCT -	1	-
12	537387201	SNAP LOCKING -	4	-
13	537349403	TRIMMER GUARD ASSY -	1	-
14	503216825	SCREW IHSCFT -	1	-
15	503798802	BLADE -	1	-
16	544124501	RETAINER -	1	-
17	502448101	TRIMMER GUARD ASSY -	1	-
18	503216825	SCREW IHSCFT -	1	-
19	503798802	BLADE -	1	-
1	501192201	TOOL -	1	-
2	531009248	FILTER OIL -	1	-
3	503976501	GREASE -	1	-
4	502285901	STOP -	1	-
5	503801701	GREASE -	1	-
6	537362102	COMBINATION WRENCH	1	-

Ref.	Article N.	Description	Qty	Kit
		-		
7	544359101	TRANSPORT GUARD -	1	-
8	537312901	TRANSPORT GUARD -	1	-
9	503890102	SUPPORT CUP -	1	-
10	537216201	HARNESS -	1	-
10	537216202	HARNESS *USA*	1	-
1	544216401	GEAR -	1	-
2	537295902	GEAR HOUSING -	1	-
3	738219900	BALL BEARING -	1	-
4	505133301	SPARE PARTS KIT -	1	-
5	503252801	BALL BEARING -	1	-
6	735313110	CIRCLIP -	1	-
7	738210110	BALL BEARING -	1	-
8	738210112	BALL BEARING -	1	-
9	735311400	CIRCLIP -	1	-
10	735312810	CIRCLIP -	1	-
11	537147401	MAGNET -	1	-
12	503201501	SCREW -	1	-
13	574306801	CLAMP -	1	-
14	544087601	CLAMP -	1	-
15	537189501	SCREW -	1	-
16	732211601	LOCK NUT -	1	-

Ref.	Article N.	Description	Qty	Kit
17	503200210	SCREW IHSCFM -	1	-
18	574039501	LOCK NUT -	1	-
19	537351402	DRIVER -	1	-
20	537343501	SUPPORT FLANGE -	1	-
21	502291101	BLADE NUT -	1	-
22	503200325	SCREW IHSCFM -	2	-
1	537334301	INLET PIPE -	1	-
2	537371202	INSULATION WALL -	1	-
3	537371101	SLEEVE -	1	-
4	544019101	TUBULAR RIVET -	1	-
5	537373803	TUBULAR RIVET -	2	-
6	503200316	SCREW IHSCFM -	2	-
7	537341301	AIR DUCT -	1	-
8	575729001	CARBURETTOR *Zama C1Q-EL45*	1	-
9	503217550	SCREW IHSCFT -	2	-
10	503497101	GASKET -	1	-
11	537349001	LEVER -	1	-
12	544372701	SLEEVING BRACKET -	1	-
13	575841801	FILTER COVER -	1	-
14	537213209	KNOB -	1	-
15	575863702	FILTER HOLDER ASSY -	1	-
16	503212906	SCREW CCRPANT	2	-

Ref.	Article N.	Description	Qty	Kit
		-		
17	575841501	CHOKE CONTROL -	1	-
18	575841602	CHOKE LEVER -	1	-
19	544014601	LEVER -	1	-
20	544014701	BELLOWS -	1	-
21	544025801	BAR -	1	-
22	503231006	WASHER -	1	-
23	576215301	FILTER -	1	-
24	575863801	FRAME -	1	-
25	503200320	SCREW IHSCFM -	1	-
1	575729001	CARBURETTOR *Zama C1Q-EL45*	1	-
2	503479201	SCREW -	1	-
3	537417201	VALVE -	1	-
4	544372401	SPRING -	1	-
5	503480501	SCREW -	1	-
6	503974301	COVER -	1	-
7	504105601	DIAPHRAGM -	1	-
8	537020401	GASKET -	1	-
9	537387301	NOZZLE ASSY -	1	-
10	503480101	SCREW -	1	-
11	503480001	PIN RETAINING SCREW -	1	-
12	503665901	LEVER -	1	-

Ref.	Article N.	Description	Qty	Kit
13	503479701	VALVE -	1	-
14	537020301	SPRING -	1	-
15	501327101	SHAFT ASSY -	1	-
16	537370301	VALVE -	1	-
17	503481801	SCREW -	1	-
18	544372601	SPRING -	1	-
19	544372501	LEVER -	1	-
20	544427001	COLLAR -	1	-
21	504102701	SHAFT ASSY -	1	-
22	537012601	SPRING -	1	-
23	537012501	BALL -	1	-
24	503481301	STRAINER -	1	-
25	503479001	SCREW -	1	-
26	537416901	SCREW -	1	-
27	537417001	LIMITER CAP -	1	-
28	537387501	SCREW -	1	-
29	537385201	CLIP -	1	-
30	576270201	THROTTLE LEVER -	1	-
31	537020001	DIAPHRAGM PUMP -	1	-
32	537020101	GASKET -	1	-
33	537020201	COVER -	1	-
34	537020701	SCREW	1	-

Ref.	Article N.	Description	Qty	Kit
		-		
35	503481101	PIECE -	1	-
36	503479601	SCREW -	1	-
37	531004552	GASKET KIT *Set of gaskets*	1	-
1	574842901	CLUTCH COVER ASSY -	1	-
2	735312810	CIRCLIP -	1	-
3	738210104	BALL BEARING -	1	-
4	503240702	PARALLEL PIN -	2	-
5	537352901	CLUTCH DRUM -	1	-
6	735311400	CIRCLIP -	1	-
7	537340401	CLUTCH -	1	-
8	537427201	SPRING -	1	-
9	537046801	WASHER -	1	-
10	537415701	WASHER -	1	-
11	537418101	SCREW -	2	-
12	503217411	SCREW IHSCT -	1	-
13	537322701	ANTIVIBRATION ELEMENT -	1	-
14	537310101	COMPRESSION SLEEVE -	1	-
15	725533355	SCREW IHSCM -	1	-
16	575865801	COVER -	1	-
17	503200320	SCREW IHSCFM -	3	-
18	537418101	SCREW -	3	-

Ref.	Article N.	Description	Qty	Kit
1	585382201	CRANKCASE ASSY -	1	-
2	738210110	BALL BEARING -	2	-
3	503260202	SEALING RING -	2	-
4	593777601	GASKET -	1	-
5	503200230	SCREW IHSCFM -	4	-
6	593806001	GUIDE BUSHING -	2	-
7	537324201	INSERT -	1	-
1	575865002	CYLINDER COVER ASSY *Spare part with Captive Screw*	1	-
2	573994305	SCREW IHSCFMO *Captiv Screw*	1	-
3	575865701	PROTECTIVE PLATE *336 FR*	1	-
4	503200302	SCREW IHSCFM -	1	-
5	575864801	MUFFLER GUARD *Spare part with Captive Screw*	1	-
6	574477003	SCREW IHSCFMO *Captiv Screw*	2	-
7	576998614	LABEL *336 FR*	1	-
8	576998615	LABEL *135 R*	1	-
9	577231101	DAMPER *135 R*	1	-
1	574364301	CYLINDER ASSY	1	-
2	585998302	PISTON ASSY	1	-
3	503289054	PISTON RING	2	-
4	503289119	PISTON PIN	1	-
5	737441000	SNAP RING	2	-
6	503255501	NEEDLE BEARING	1	-
7	725533355	SCREW IHSCM	4	-
1	544328801	TANK ASSY -	1	-
2	503911001	SUSPENSION	4	-

Ref.	Article N.	Description	Qty	Kit
		-		
3	590324801	TANK CAP ASSY -	1	-
4	503936601	PURGE -	1	-
5	537042412	FUEL HOSE -	2	-
6	537052301	FUEL HOSE -	1	-
7	503735801	BUSHING -	2	-
8	537184901	O-RING -	1	-
9	503443201	FUEL FILTER -	1	-
1	537275702	HARNESS -	1	-
1	537275704	HARNESS *US*	1	-
2	537288301	BUCKLE -	1	-
3	537288401	BUCKLE -	1	-
4	537275901	HIP PAD -	1	-
5	502022801	HOOK -	1	-
6	502022902	HOOK -	1	-
7	502023002	LOCK -	1	-
8	586341001	SPRING -	1	-
9	735310920	E-CLIP -	1	-
10	503996101	BAND -	3	-
11	537113501	RETAINER -	1	-
12	503996103	BAND -	1	-
1	537249601	FLYWHEEL -	1	-

Ref.	Article N.	Description	Qty	Kit
2	731711651	HEXAGON NUT FLANGE -	1	-
3	544127001	IGNITION MODULE -	1	-
4	503202516	SCREW IHSCM -	2	-
5	503235109	SPARK PLUG -	1	-
6	537239301	CONTACT SPRING -	1	-
1	505408601	MUFFLER ASSY *CAT*	1	-
2	544116801	SPARK ARRESTER SCREEN -	1	-
3	724128759	SCREW CRPANM -	1	-
4	537333101	GASKET -	1	-
5	537340801	AIR CONDUCTOR -	1	-
6	503202963	SCREW IHSCFM -	2	-
7	503200320	SCREW IHSCFM -	1	-
1	501919701	TUBE ASSY -	1	-
2	537214101	TUBE -	1	-
3	537313901	GUIDE -	1	-
4	537360201	SPACER -	1	-
5	537360202	SPACER -	1	-
6	544183201	DRIVE SHAFT -	1	-
7	537130403	KNOB -	1	-
8	725233151	SCREW -	1	-
9	505161001	LOOP -	1	-
10	537350101	LOOP	1	-

Ref.	Article N.	Description	Qty	Kit
		-		
11	503217516	SCREW IHSCFT -	1	-
12	537376101	WIRING -	1	-
13	589295101	LABEL -	1	-
1	594729101	SHORT BLOCK ASSY *Assembled*	1	-
1	575840801	STARTER ASSY -	1	-
2	575840901	STARTER HOUSING *Spare part adapted for captive screw*	1	-
3	537325003	STARTER PULLEY -	1	-
4	503859901	RECOIL SPRING -	1	-
5	503218876	SCREW IHSCT -	1	-
6	503230080	WASHER -	1	-
7	537232501	STARTER HANDLE -	1	-
8	505305125	STARTER ROPE -	1	-
9	573994305	SCREW IHSCFMO *Captive screw*	3	-
10	577223601	DECAL -	1	-
11	503873305	STARTER PAWL -	1	-
12	503873502	STARTER PAWL -	2	-
13	503873601	SPRING -	2	-
14	735310820	E-CLIP -	2	-
1	537424507	HANDLE SYSTEM -	1	-
2	537160203	HANDLE HALF *HARD GRIP, GREY*	1	-
2	537160209	HANDLE HALF *SOFT GRIP, GREY + BLACK TPE*	1	-

Ref.	Article N.	Description	Qty	Kit
3	537160301	HANDLE HALF *HARD GRIP, GREY*	1	-
3	537160302	HANDLE HALF *SOFT GRIP, GREY + BLACK TPE*	1	-
4	503221013	HEXAGON NUT -	1	-
5	537359602	WIRING ASSY -	1	-
6	537377801	THROTTLE CABLE ASSY -	1	-
7	503216618	SCREW IHSCT -	1	-
8	503878507	SHORT CIRCUIT CABLE -	1	-
9	537419001	SWITCH -	1	-
10	506497701	THROTTLE CONTROL -	1	-
11	537174201	SPRING -	1	-
12	537160701	THROTTLE LOCKOUT -	1	-
13	537174301	SPRING -	1	-
14	503216618	SCREW IHSCT -	2	-
15	503200735	SCREW IHSCFM -	1	-
16	502199503	HANDLEBAR -	1	-
17	537172801	HANDLE -	1	-
18	537172901	COVER -	1	-
19	731231401	HEXAGON NUT -	1	-
20	503200245	SCREW IHSCFM -	1	-
21	503750002	HANDLEBAR BRACKET -	1	-
22	502211201	STAPLE -	1	-
1	576277401	HANDLEBAR BRACKET	1	-

Ref.	Article N.	Description	Qty	Kit
		-		
2	731231401	HEXAGON NUT -	4	-
3	502197101	SQUARE NUT -	1	-
4	502286101	CLIP -	1	-
5	502203801	KNOB -	1	-
6	725238351	SCREW EHHM -	1	-
7	576220101	COVER -	1	-
8	576220001	LID -	1	-
9	503200778	SCREW IHSCFM -	4	-
1	536805601	CRANKSHAFT ASSY	1	-
2	503260202	SEALING RING	2	-
3	738210110	BALL BEARING	2	-
4	503255501	NEEDLE BEARING	1	-

CARBURETOR AND AIR FILTER

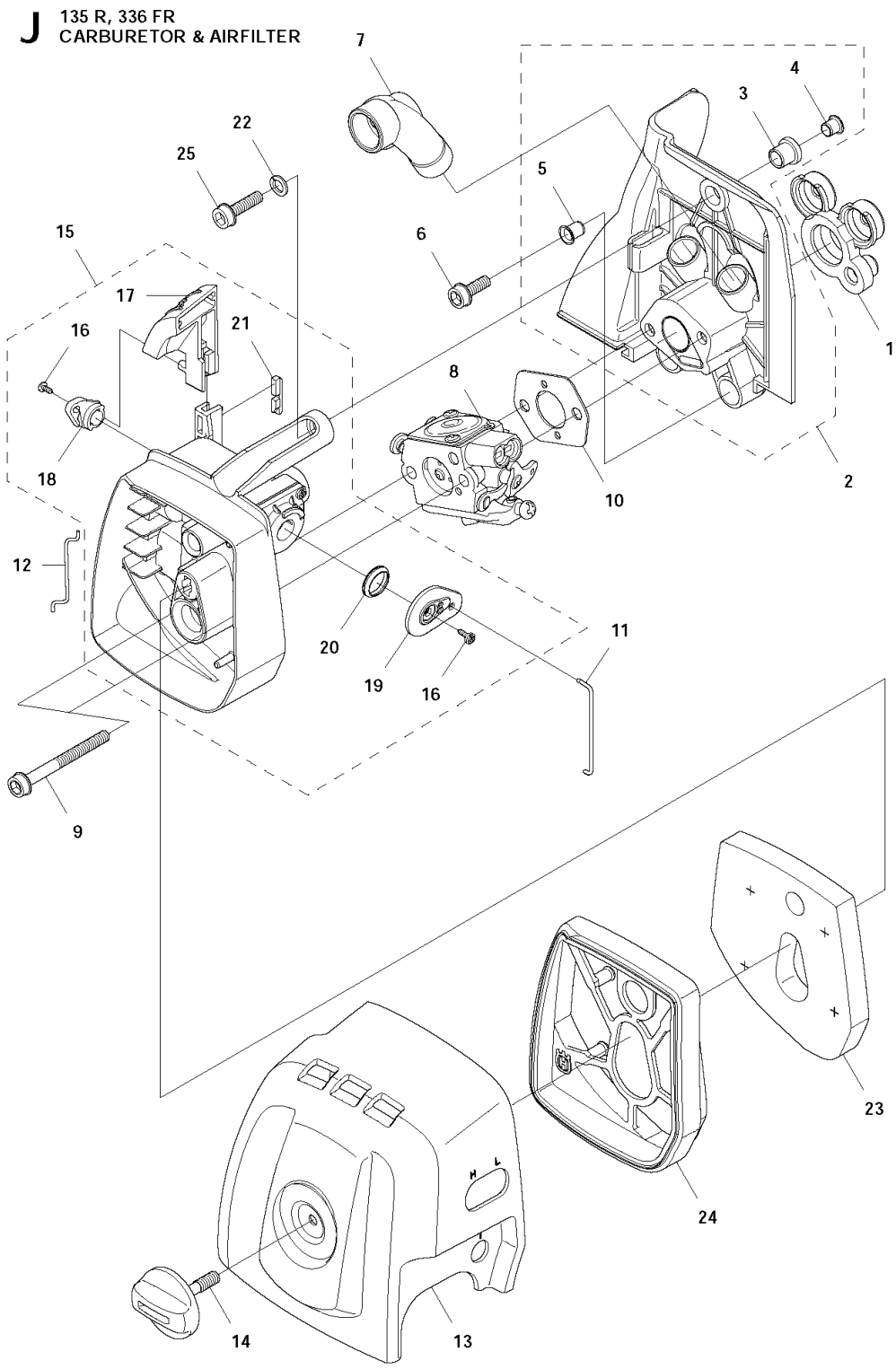

Ref.	Article N.	Description	Qty	Kit
1	501320402	SAW BLADE GUARD -	1	-
2	574530601	CLAMP *Spare part with Captive Screw*	1	-
3	573994304	SCREW IHSCFMO *Captive Screw*	2	-

Ref.	Article N.	Description	Qty	Kit
4	501320801	ADAPTER -	1	-
5	574532601	BLADE GUARD -	1	-
6	503200216	SCREW IHSCFM -	4	-
7	574039501	LOCK NUT -	4	-
8	537331603	SPLASH GUARD -	1	-
9	537396303	SPLASH GUARD -	1	-
10	503798802	BLADE -	1	-
11	503210716	SCREW IHSCT -	1	-
12	537387201	SNAP LOCKING -	4	-
13	537349403	TRIMMER GUARD ASSY -	1	-
14	503216825	SCREW IHSCFT -	1	-
15	503798802	BLADE -	1	-
16	544124501	RETAINER -	1	-
17	502448101	TRIMMER GUARD ASSY -	1	-
18	503216825	SCREW IHSCFT -	1	-
19	503798802	BLADE -	1	-
1	501192201	TOOL -	1	-
2	531009248	FILTER OIL -	1	-
3	503976501	GREASE -	1	-
4	502285901	STOP -	1	-
5	503801701	GREASE -	1	-
6	537362102	COMBINATION WRENCH	1	-

Ref.	Article N.	Description	Qty	Kit
		-		
7	544359101	TRANSPORT GUARD -	1	-
8	537312901	TRANSPORT GUARD -	1	-
9	503890102	SUPPORT CUP -	1	-
10	537216201	HARNESS -	1	-
10	537216202	HARNESS *USA*	1	-
1	544216401	GEAR -	1	-
2	537295902	GEAR HOUSING -	1	-
3	738219900	BALL BEARING -	1	-
4	505133301	SPARE PARTS KIT -	1	-
5	503252801	BALL BEARING -	1	-
6	735313110	CIRCLIP -	1	-
7	738210110	BALL BEARING -	1	-
8	738210112	BALL BEARING -	1	-
9	735311400	CIRCLIP -	1	-
10	735312810	CIRCLIP -	1	-
11	537147401	MAGNET -	1	-
12	503201501	SCREW -	1	-
13	574306801	CLAMP -	1	-
14	544087601	CLAMP -	1	-
15	537189501	SCREW -	1	-
16	732211601	LOCK NUT -	1	-

Ref.	Article N.	Description	Qty	Kit
17	503200210	SCREW IHSCFM -	1	-
18	574039501	LOCK NUT -	1	-
19	537351402	DRIVER -	1	-
20	537343501	SUPPORT FLANGE -	1	-
21	502291101	BLADE NUT -	1	-
22	503200325	SCREW IHSCFM -	2	-
1	537334301	INLET PIPE -	1	-
2	537371202	INSULATION WALL -	1	-
3	537371101	SLEEVE -	1	-
4	544019101	TUBULAR RIVET -	1	-
5	537373803	TUBULAR RIVET -	2	-
6	503200316	SCREW IHSCFM -	2	-
7	537341301	AIR DUCT -	1	-
8	575729001	CARBURETTOR *Zama C1Q-EL45*	1	-
9	503217550	SCREW IHSCFT -	2	-
10	503497101	GASKET -	1	-
11	537349001	LEVER -	1	-
12	544372701	SLEEVING BRACKET -	1	-
13	575841801	FILTER COVER -	1	-
14	537213209	KNOB -	1	-
15	575863702	FILTER HOLDER ASSY -	1	-
16	503212906	SCREW CCRPANT	2	-

Ref.	Article N.	Description	Qty	Kit
		-		
17	575841501	CHOKE CONTROL -	1	-
18	575841602	CHOKE LEVER -	1	-
19	544014601	LEVER -	1	-
20	544014701	BELLOWS -	1	-
21	544025801	BAR -	1	-
22	503231006	WASHER -	1	-
23	576215301	FILTER -	1	-
24	575863801	FRAME -	1	-
25	503200320	SCREW IHSCFM -	1	-
1	575729001	CARBURETTOR *Zama C1Q-EL45*	1	-
2	503479201	SCREW -	1	-
3	537417201	VALVE -	1	-
4	544372401	SPRING -	1	-
5	503480501	SCREW -	1	-
6	503974301	COVER -	1	-
7	504105601	DIAPHRAGM -	1	-
8	537020401	GASKET -	1	-
9	537387301	NOZZLE ASSY -	1	-
10	503480101	SCREW -	1	-
11	503480001	PIN RETAINING SCREW -	1	-
12	503665901	LEVER -	1	-

Ref.	Article N.	Description	Qty	Kit
13	503479701	VALVE -	1	-
14	537020301	SPRING -	1	-
15	501327101	SHAFT ASSY -	1	-
16	537370301	VALVE -	1	-
17	503481801	SCREW -	1	-
18	544372601	SPRING -	1	-
19	544372501	LEVER -	1	-
20	544427001	COLLAR -	1	-
21	504102701	SHAFT ASSY -	1	-
22	537012601	SPRING -	1	-
23	537012501	BALL -	1	-
24	503481301	STRAINER -	1	-
25	503479001	SCREW -	1	-
26	537416901	SCREW -	1	-
27	537417001	LIMITER CAP -	1	-
28	537387501	SCREW -	1	-
29	537385201	CLIP -	1	-
30	576270201	THROTTLE LEVER -	1	-
31	537020001	DIAPHRAGM PUMP -	1	-
32	537020101	GASKET -	1	-
33	537020201	COVER -	1	-
34	537020701	SCREW	1	-

Ref.	Article N.	Description	Qty	Kit
		-		
35	503481101	PIECE -	1	-
36	503479601	SCREW -	1	-
37	531004552	GASKET KIT *Set of gaskets*	1	-
1	574842901	CLUTCH COVER ASSY -	1	-
2	735312810	CIRCLIP -	1	-
3	738210104	BALL BEARING -	1	-
4	503240702	PARALLEL PIN -	2	-
5	537352901	CLUTCH DRUM -	1	-
6	735311400	CIRCLIP -	1	-
7	537340401	CLUTCH -	1	-
8	537427201	SPRING -	1	-
9	537046801	WASHER -	1	-
10	537415701	WASHER -	1	-
11	537418101	SCREW -	2	-
12	503217411	SCREW IHSCT -	1	-
13	537322701	ANTIVIBRATION ELEMENT -	1	-
14	537310101	COMPRESSION SLEEVE -	1	-
15	725533355	SCREW IHSCM -	1	-
16	575865801	COVER -	1	-
17	503200320	SCREW IHSCFM -	3	-
18	537418101	SCREW -	3	-

Ref.	Article N.	Description	Qty	Kit
1	585382201	CRANKCASE ASSY -	1	-
2	738210110	BALL BEARING -	2	-
3	503260202	SEALING RING -	2	-
4	593777601	GASKET -	1	-
5	503200230	SCREW IHSCFM -	4	-
6	593806001	GUIDE BUSHING -	2	-
7	537324201	INSERT -	1	-
1	575865002	CYLINDER COVER ASSY *Spare part with Captive Screw*	1	-
2	573994305	SCREW IHSCFMO *Captiv Screw*	1	-
3	575865701	PROTECTIVE PLATE *336 FR*	1	-
4	503200302	SCREW IHSCFM -	1	-
5	575864801	MUFFLER GUARD *Spare part with Captive Screw*	1	-
6	574477003	SCREW IHSCFMO *Captiv Screw*	2	-
7	576998614	LABEL *336 FR*	1	-
8	576998615	LABEL *135 R*	1	-
9	577231101	DAMPER *135 R*	1	-
1	574364301	CYLINDER ASSY	1	-
2	585998302	PISTON ASSY	1	-
3	503289054	PISTON RING	2	-
4	503289119	PISTON PIN	1	-
5	737441000	SNAP RING	2	-
6	503255501	NEEDLE BEARING	1	-
7	725533355	SCREW IHSCM	4	-
1	544328801	TANK ASSY -	1	-
2	503911001	SUSPENSION	4	-

Ref.	Article N.	Description	Qty	Kit
		-		
3	590324801	TANK CAP ASSY -	1	-
4	503936601	PURGE -	1	-
5	537042412	FUEL HOSE -	2	-
6	537052301	FUEL HOSE -	1	-
7	503735801	BUSHING -	2	-
8	537184901	O-RING -	1	-
9	503443201	FUEL FILTER -	1	-
1	537275702	HARNESS -	1	-
1	537275704	HARNESS *US*	1	-
2	537288301	BUCKLE -	1	-
3	537288401	BUCKLE -	1	-
4	537275901	HIP PAD -	1	-
5	502022801	HOOK -	1	-
6	502022902	HOOK -	1	-
7	502023002	LOCK -	1	-
8	586341001	SPRING -	1	-
9	735310920	E-CLIP -	1	-
10	503996101	BAND -	3	-
11	537113501	RETAINER -	1	-
12	503996103	BAND -	1	-
1	537249601	FLYWHEEL -	1	-

Ref.	Article N.	Description	Qty	Kit
2	731711651	HEXAGON NUT FLANGE -	1	-
3	544127001	IGNITION MODULE -	1	-
4	503202516	SCREW IHSCM -	2	-
5	503235109	SPARK PLUG -	1	-
6	537239301	CONTACT SPRING -	1	-
1	505408601	MUFFLER ASSY *CAT*	1	-
2	544116801	SPARK ARRESTER SCREEN -	1	-
3	724128759	SCREW CRPANM -	1	-
4	537333101	GASKET -	1	-
5	537340801	AIR CONDUCTOR -	1	-
6	503202963	SCREW IHSCFM -	2	-
7	503200320	SCREW IHSCFM -	1	-
1	501919701	TUBE ASSY -	1	-
2	537214101	TUBE -	1	-
3	537313901	GUIDE -	1	-
4	537360201	SPACER -	1	-
5	537360202	SPACER -	1	-
6	544183201	DRIVE SHAFT -	1	-
7	537130403	KNOB -	1	-
8	725233151	SCREW -	1	-
9	505161001	LOOP -	1	-
10	537350101	LOOP	1	-

Ref.	Article N.	Description	Qty	Kit
		-		
11	503217516	SCREW IHSCFT -	1	-
12	537376101	WIRING -	1	-
13	589295101	LABEL -	1	-
1	594729101	SHORT BLOCK ASSY *Assembled*	1	-
1	575840801	STARTER ASSY -	1	-
2	575840901	STARTER HOUSING *Spare part adapted for captive screw*	1	-
3	537325003	STARTER PULLEY -	1	-
4	503859901	RECOIL SPRING -	1	-
5	503218876	SCREW IHSCT -	1	-
6	503230080	WASHER -	1	-
7	537232501	STARTER HANDLE -	1	-
8	505305125	STARTER ROPE -	1	-
9	573994305	SCREW IHSCFMO *Captive screw*	3	-
10	577223601	DECAL -	1	-
11	503873305	STARTER PAWL -	1	-
12	503873502	STARTER PAWL -	2	-
13	503873601	SPRING -	2	-
14	735310820	E-CLIP -	2	-
1	537424507	HANDLE SYSTEM -	1	-
2	537160203	HANDLE HALF *HARD GRIP, GREY*	1	-
2	537160209	HANDLE HALF *SOFT GRIP, GREY + BLACK TPE*	1	-

Ref.	Article N.	Description	Qty	Kit
3	537160301	HANDLE HALF *HARD GRIP, GREY*	1	-
3	537160302	HANDLE HALF *SOFT GRIP, GREY + BLACK TPE*	1	-
4	503221013	HEXAGON NUT -	1	-
5	537359602	WIRING ASSY -	1	-
6	537377801	THROTTLE CABLE ASSY -	1	-
7	503216618	SCREW IHSCT -	1	-
8	503878507	SHORT CIRCUIT CABLE -	1	-
9	537419001	SWITCH -	1	-
10	506497701	THROTTLE CONTROL -	1	-
11	537174201	SPRING -	1	-
12	537160701	THROTTLE LOCKOUT -	1	-
13	537174301	SPRING -	1	-
14	503216618	SCREW IHSCT -	2	-
15	503200735	SCREW IHSCFM -	1	-
16	502199503	HANDLEBAR -	1	-
17	537172801	HANDLE -	1	-
18	537172901	COVER -	1	-
19	731231401	HEXAGON NUT -	1	-
20	503200245	SCREW IHSCFM -	1	-
21	503750002	HANDLEBAR BRACKET -	1	-
22	502211201	STAPLE -	1	-
1	576277401	HANDLEBAR BRACKET	1	-

Ref.	Article N.	Description	Qty	Kit
		-		
2	731231401	HEXAGON NUT -	4	-
3	502197101	SQUARE NUT -	1	-
4	502286101	CLIP -	1	-
5	502203801	KNOB -	1	-
6	725238351	SCREW EHHM -	1	-
7	576220101	COVER -	1	-
8	576220001	LID -	1	-
9	503200778	SCREW IHSCFM -	4	-
1	536805601	CRANKSHAFT ASSY	1	-
2	503260202	SEALING RING	2	-
3	738210110	BALL BEARING	2	-
4	503255501	NEEDLE BEARING	1	-

CARBURETOR

Q 135 R, 336 FR
CARBURETOR

Zama C1Q-EL45

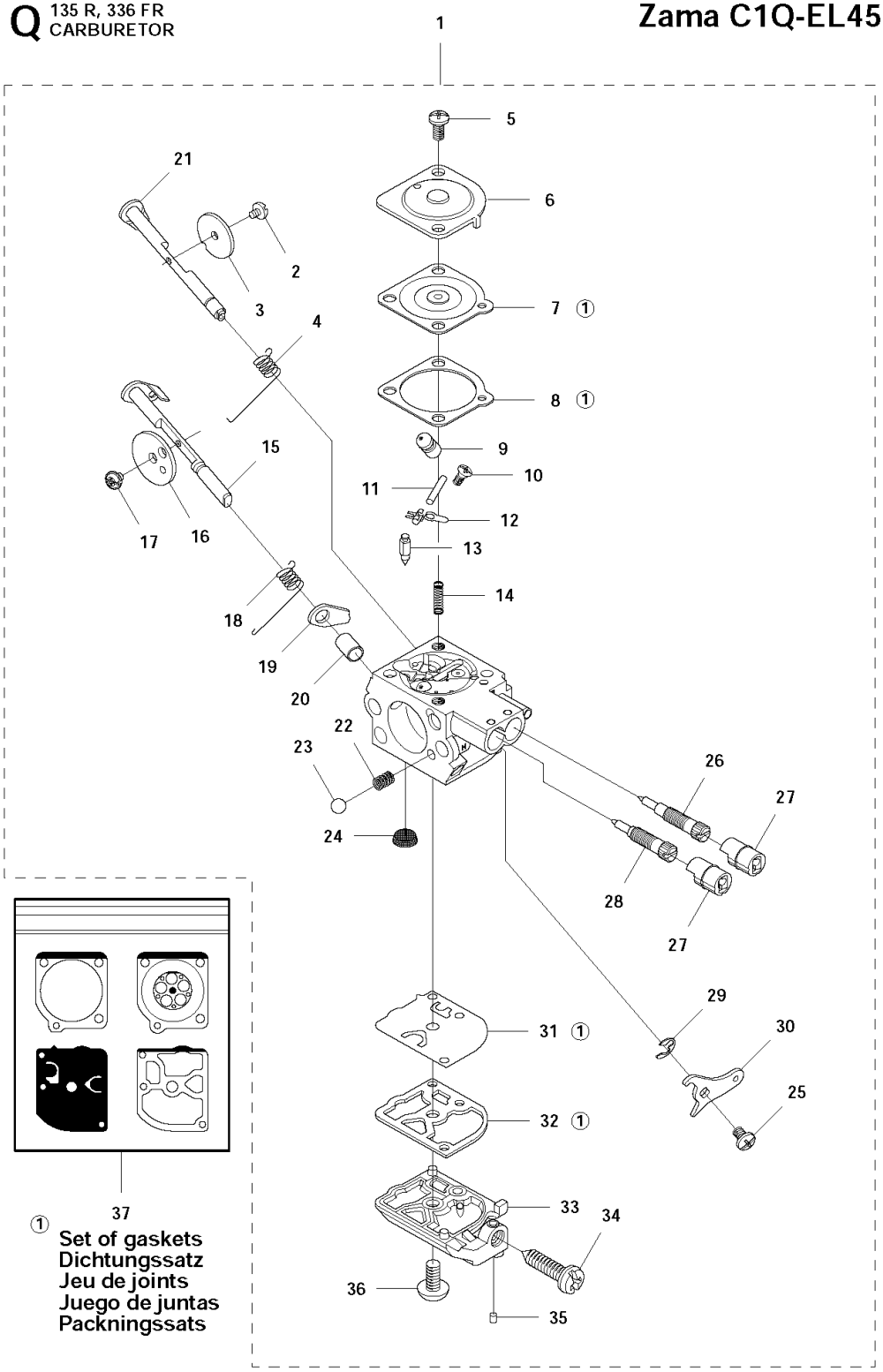

Ref.	Article N.	Description	Qty	Kit
1	501320402	SAW BLADE GUARD -	1	-
2	574530601	CLAMP *Spare part with Captive Screw*	1	-
3	573994304	SCREW IHSCFMO *Captive Screw*	2	-

Ref.	Article N.	Description	Qty	Kit
4	501320801	ADAPTER -	1	-
5	574532601	BLADE GUARD -	1	-
6	503200216	SCREW IHSCFM -	4	-
7	574039501	LOCK NUT -	4	-
8	537331603	SPLASH GUARD -	1	-
9	537396303	SPLASH GUARD -	1	-
10	503798802	BLADE -	1	-
11	503210716	SCREW IHSCT -	1	-
12	537387201	SNAP LOCKING -	4	-
13	537349403	TRIMMER GUARD ASSY -	1	-
14	503216825	SCREW IHSCFT -	1	-
15	503798802	BLADE -	1	-
16	544124501	RETAINER -	1	-
17	502448101	TRIMMER GUARD ASSY -	1	-
18	503216825	SCREW IHSCFT -	1	-
19	503798802	BLADE -	1	-
1	501192201	TOOL -	1	-
2	531009248	FILTER OIL -	1	-
3	503976501	GREASE -	1	-
4	502285901	STOP -	1	-
5	503801701	GREASE -	1	-
6	537362102	COMBINATION WRENCH	1	-

Ref.	Article N.	Description	Qty	Kit
		-		
7	544359101	TRANSPORT GUARD -	1	-
8	537312901	TRANSPORT GUARD -	1	-
9	503890102	SUPPORT CUP -	1	-
10	537216201	HARNESS -	1	-
10	537216202	HARNESS *USA*	1	-
1	544216401	GEAR -	1	-
2	537295902	GEAR HOUSING -	1	-
3	738219900	BALL BEARING -	1	-
4	505133301	SPARE PARTS KIT -	1	-
5	503252801	BALL BEARING -	1	-
6	735313110	CIRCLIP -	1	-
7	738210110	BALL BEARING -	1	-
8	738210112	BALL BEARING -	1	-
9	735311400	CIRCLIP -	1	-
10	735312810	CIRCLIP -	1	-
11	537147401	MAGNET -	1	-
12	503201501	SCREW -	1	-
13	574306801	CLAMP -	1	-
14	544087601	CLAMP -	1	-
15	537189501	SCREW -	1	-
16	732211601	LOCK NUT -	1	-

Ref.	Article N.	Description	Qty	Kit
17	503200210	SCREW IHSCFM -	1	-
18	574039501	LOCK NUT -	1	-
19	537351402	DRIVER -	1	-
20	537343501	SUPPORT FLANGE -	1	-
21	502291101	BLADE NUT -	1	-
22	503200325	SCREW IHSCFM -	2	-
1	537334301	INLET PIPE -	1	-
2	537371202	INSULATION WALL -	1	-
3	537371101	SLEEVE -	1	-
4	544019101	TUBULAR RIVET -	1	-
5	537373803	TUBULAR RIVET -	2	-
6	503200316	SCREW IHSCFM -	2	-
7	537341301	AIR DUCT -	1	-
8	575729001	CARBURETTOR *Zama C1Q-EL45*	1	-
9	503217550	SCREW IHSCFT -	2	-
10	503497101	GASKET -	1	-
11	537349001	LEVER -	1	-
12	544372701	SLEEVING BRACKET -	1	-
13	575841801	FILTER COVER -	1	-
14	537213209	KNOB -	1	-
15	575863702	FILTER HOLDER ASSY -	1	-
16	503212906	SCREW CCRPANT	2	-

Ref.	Article N.	Description	Qty	Kit
		-		
17	575841501	CHOKE CONTROL -	1	-
18	575841602	CHOKE LEVER -	1	-
19	544014601	LEVER -	1	-
20	544014701	BELLOWS -	1	-
21	544025801	BAR -	1	-
22	503231006	WASHER -	1	-
23	576215301	FILTER -	1	-
24	575863801	FRAME -	1	-
25	503200320	SCREW IHSCFM -	1	-
1	575729001	CARBURETTOR *Zama C1Q-EL45*	1	-
2	503479201	SCREW -	1	-
3	537417201	VALVE -	1	-
4	544372401	SPRING -	1	-
5	503480501	SCREW -	1	-
6	503974301	COVER -	1	-
7	504105601	DIAPHRAGM -	1	-
8	537020401	GASKET -	1	-
9	537387301	NOZZLE ASSY -	1	-
10	503480101	SCREW -	1	-
11	503480001	PIN RETAINING SCREW -	1	-
12	503665901	LEVER -	1	-

Ref.	Article N.	Description	Qty	Kit
13	503479701	VALVE -	1	-
14	537020301	SPRING -	1	-
15	501327101	SHAFT ASSY -	1	-
16	537370301	VALVE -	1	-
17	503481801	SCREW -	1	-
18	544372601	SPRING -	1	-
19	544372501	LEVER -	1	-
20	544427001	COLLAR -	1	-
21	504102701	SHAFT ASSY -	1	-
22	537012601	SPRING -	1	-
23	537012501	BALL -	1	-
24	503481301	STRAINER -	1	-
25	503479001	SCREW -	1	-
26	537416901	SCREW -	1	-
27	537417001	LIMITER CAP -	1	-
28	537387501	SCREW -	1	-
29	537385201	CLIP -	1	-
30	576270201	THROTTLE LEVER -	1	-
31	537020001	DIAPHRAGM PUMP -	1	-
32	537020101	GASKET -	1	-
33	537020201	COVER -	1	-
34	537020701	SCREW	1	-

Ref.	Article N.	Description	Qty	Kit
		-		
35	503481101	PIECE -	1	-
36	503479601	SCREW -	1	-
37	531004552	GASKET KIT *Set of gaskets*	1	-
1	574842901	CLUTCH COVER ASSY -	1	-
2	735312810	CIRCLIP -	1	-
3	738210104	BALL BEARING -	1	-
4	503240702	PARALLEL PIN -	2	-
5	537352901	CLUTCH DRUM -	1	-
6	735311400	CIRCLIP -	1	-
7	537340401	CLUTCH -	1	-
8	537427201	SPRING -	1	-
9	537046801	WASHER -	1	-
10	537415701	WASHER -	1	-
11	537418101	SCREW -	2	-
12	503217411	SCREW IHSCT -	1	-
13	537322701	ANTIVIBRATION ELEMENT -	1	-
14	537310101	COMPRESSION SLEEVE -	1	-
15	725533355	SCREW IHSCM -	1	-
16	575865801	COVER -	1	-
17	503200320	SCREW IHSCFM -	3	-
18	537418101	SCREW -	3	-

Ref.	Article N.	Description	Qty	Kit
1	585382201	CRANKCASE ASSY -	1	-
2	738210110	BALL BEARING -	2	-
3	503260202	SEALING RING -	2	-
4	593777601	GASKET -	1	-
5	503200230	SCREW IHSCFM -	4	-
6	593806001	GUIDE BUSHING -	2	-
7	537324201	INSERT -	1	-
1	575865002	CYLINDER COVER ASSY *Spare part with Captive Screw*	1	-
2	573994305	SCREW IHSCFMO *Captiv Screw*	1	-
3	575865701	PROTECTIVE PLATE *336 FR*	1	-
4	503200302	SCREW IHSCFM -	1	-
5	575864801	MUFFLER GUARD *Spare part with Captive Screw*	1	-
6	574477003	SCREW IHSCFMO *Captiv Screw*	2	-
7	576998614	LABEL *336 FR*	1	-
8	576998615	LABEL *135 R*	1	-
9	577231101	DAMPER *135 R*	1	-
1	574364301	CYLINDER ASSY	1	-
2	585998302	PISTON ASSY	1	-
3	503289054	PISTON RING	2	-
4	503289119	PISTON PIN	1	-
5	737441000	SNAP RING	2	-
6	503255501	NEEDLE BEARING	1	-
7	725533355	SCREW IHSCM	4	-
1	544328801	TANK ASSY -	1	-
2	503911001	SUSPENSION	4	-

Ref.	Article N.	Description	Qty	Kit
		-		
3	590324801	TANK CAP ASSY -	1	-
4	503936601	PURGE -	1	-
5	537042412	FUEL HOSE -	2	-
6	537052301	FUEL HOSE -	1	-
7	503735801	BUSHING -	2	-
8	537184901	O-RING -	1	-
9	503443201	FUEL FILTER -	1	-
1	537275702	HARNESS -	1	-
1	537275704	HARNESS *US*	1	-
2	537288301	BUCKLE -	1	-
3	537288401	BUCKLE -	1	-
4	537275901	HIP PAD -	1	-
5	502022801	HOOK -	1	-
6	502022902	HOOK -	1	-
7	502023002	LOCK -	1	-
8	586341001	SPRING -	1	-
9	735310920	E-CLIP -	1	-
10	503996101	BAND -	3	-
11	537113501	RETAINER -	1	-
12	503996103	BAND -	1	-
1	537249601	FLYWHEEL -	1	-

Ref.	Article N.	Description	Qty	Kit
2	731711651	HEXAGON NUT FLANGE -	1	-
3	544127001	IGNITION MODULE -	1	-
4	503202516	SCREW IHSCM -	2	-
5	503235109	SPARK PLUG -	1	-
6	537239301	CONTACT SPRING -	1	-
1	505408601	MUFFLER ASSY *CAT*	1	-
2	544116801	SPARK ARRESTER SCREEN -	1	-
3	724128759	SCREW CRPANM -	1	-
4	537333101	GASKET -	1	-
5	537340801	AIR CONDUCTOR -	1	-
6	503202963	SCREW IHSCFM -	2	-
7	503200320	SCREW IHSCFM -	1	-
1	501919701	TUBE ASSY -	1	-
2	537214101	TUBE -	1	-
3	537313901	GUIDE -	1	-
4	537360201	SPACER -	1	-
5	537360202	SPACER -	1	-
6	544183201	DRIVE SHAFT -	1	-
7	537130403	KNOB -	1	-
8	725233151	SCREW -	1	-
9	505161001	LOOP -	1	-
10	537350101	LOOP	1	-

Ref.	Article N.	Description	Qty	Kit
		-		
11	503217516	SCREW IHSCFT -	1	-
12	537376101	WIRING -	1	-
13	589295101	LABEL -	1	-
1	594729101	SHORT BLOCK ASSY *Assembled*	1	-
1	575840801	STARTER ASSY -	1	-
2	575840901	STARTER HOUSING *Spare part adapted for captive screw*	1	-
3	537325003	STARTER PULLEY -	1	-
4	503859901	RECOIL SPRING -	1	-
5	503218876	SCREW IHSCT -	1	-
6	503230080	WASHER -	1	-
7	537232501	STARTER HANDLE -	1	-
8	505305125	STARTER ROPE -	1	-
9	573994305	SCREW IHSCFMO *Captive screw*	3	-
10	577223601	DECAL -	1	-
11	503873305	STARTER PAWL -	1	-
12	503873502	STARTER PAWL -	2	-
13	503873601	SPRING -	2	-
14	735310820	E-CLIP -	2	-
1	537424507	HANDLE SYSTEM -	1	-
2	537160203	HANDLE HALF *HARD GRIP, GREY*	1	-
2	537160209	HANDLE HALF *SOFT GRIP, GREY + BLACK TPE*	1	-

Ref.	Article N.	Description	Qty	Kit
3	537160301	HANDLE HALF *HARD GRIP, GREY*	1	-
3	537160302	HANDLE HALF *SOFT GRIP, GREY + BLACK TPE*	1	-
4	503221013	HEXAGON NUT -	1	-
5	537359602	WIRING ASSY -	1	-
6	537377801	THROTTLE CABLE ASSY -	1	-
7	503216618	SCREW IHSCT -	1	-
8	503878507	SHORT CIRCUIT CABLE -	1	-
9	537419001	SWITCH -	1	-
10	506497701	THROTTLE CONTROL -	1	-
11	537174201	SPRING -	1	-
12	537160701	THROTTLE LOCKOUT -	1	-
13	537174301	SPRING -	1	-
14	503216618	SCREW IHSCT -	2	-
15	503200735	SCREW IHSCFM -	1	-
16	502199503	HANDLEBAR -	1	-
17	537172801	HANDLE -	1	-
18	537172901	COVER -	1	-
19	731231401	HEXAGON NUT -	1	-
20	503200245	SCREW IHSCFM -	1	-
21	503750002	HANDLEBAR BRACKET -	1	-
22	502211201	STAPLE -	1	-
1	576277401	HANDLEBAR BRACKET	1	-

Ref.	Article N.	Description	Qty	Kit
		-		
2	731231401	HEXAGON NUT -	4	-
3	502197101	SQUARE NUT -	1	-
4	502286101	CLIP -	1	-
5	502203801	KNOB -	1	-
6	725238351	SCREW EHHM -	1	-
7	576220101	COVER -	1	-
8	576220001	LID -	1	-
9	503200778	SCREW IHSCFM -	4	-
1	536805601	CRANKSHAFT ASSY	1	-
2	503260202	SEALING RING	2	-
3	738210110	BALL BEARING	2	-
4	503255501	NEEDLE BEARING	1	-

CLUTCH

F 135 R, 336 FR
CLUTCH

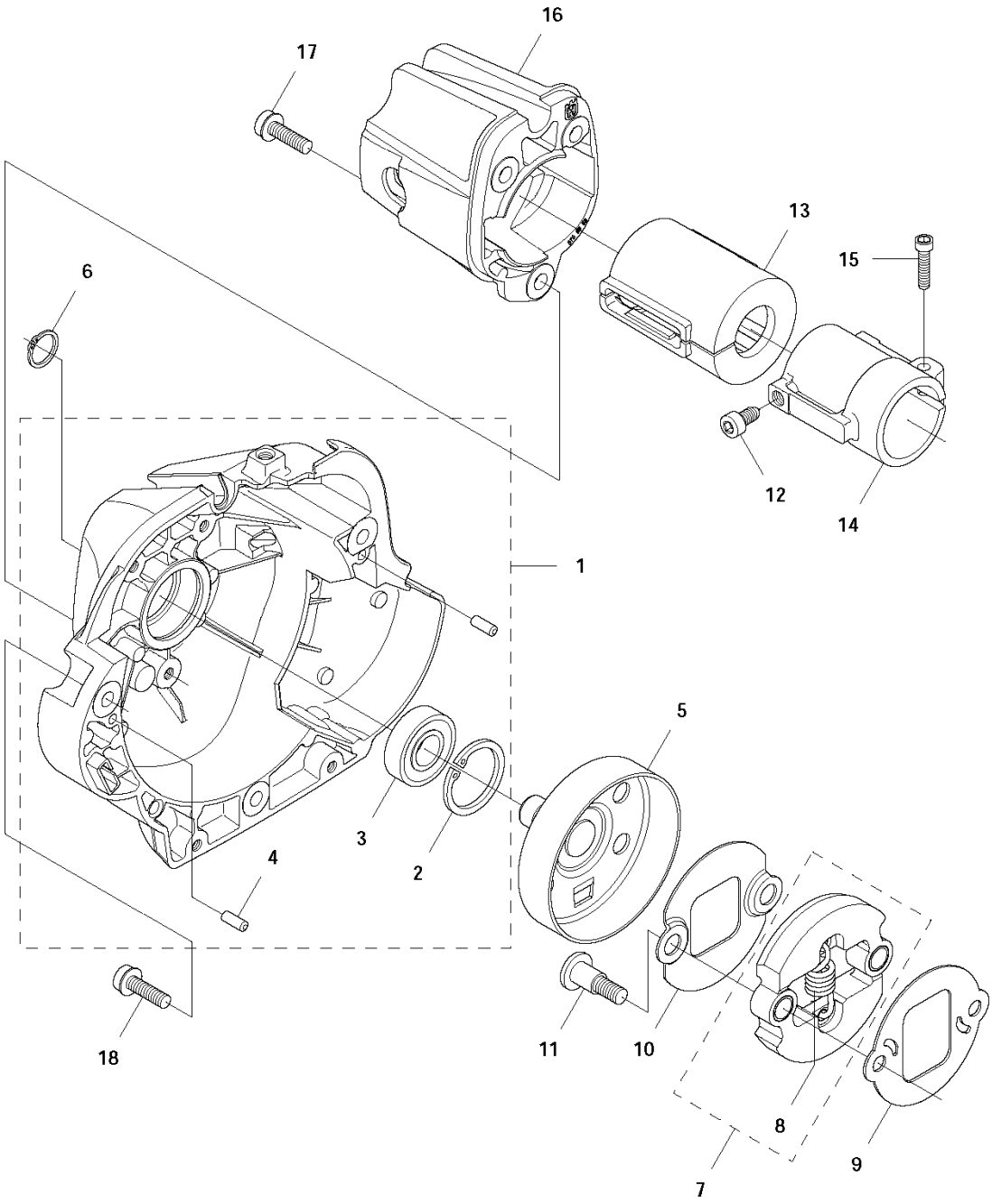

Ref.	Article N.	Description	Qty	Kit
1	501320402	SAW BLADE GUARD -	1	-
2	574530601	CLAMP *Spare part with Captive Screw*	1	-
3	573994304	SCREW IHSCFMO *Captive Screw*	2	-

Ref.	Article N.	Description	Qty	Kit
4	501320801	ADAPTER -	1	-
5	574532601	BLADE GUARD -	1	-
6	503200216	SCREW IHSCFM -	4	-
7	574039501	LOCK NUT -	4	-
8	537331603	SPLASH GUARD -	1	-
9	537396303	SPLASH GUARD -	1	-
10	503798802	BLADE -	1	-
11	503210716	SCREW IHSCT -	1	-
12	537387201	SNAP LOCKING -	4	-
13	537349403	TRIMMER GUARD ASSY -	1	-
14	503216825	SCREW IHSCFT -	1	-
15	503798802	BLADE -	1	-
16	544124501	RETAINER -	1	-
17	502448101	TRIMMER GUARD ASSY -	1	-
18	503216825	SCREW IHSCFT -	1	-
19	503798802	BLADE -	1	-
1	501192201	TOOL -	1	-
2	531009248	FILTER OIL -	1	-
3	503976501	GREASE -	1	-
4	502285901	STOP -	1	-
5	503801701	GREASE -	1	-
6	537362102	COMBINATION WRENCH	1	-

Ref.	Article N.	Description	Qty	Kit
		-		
7	544359101	TRANSPORT GUARD -	1	-
8	537312901	TRANSPORT GUARD -	1	-
9	503890102	SUPPORT CUP -	1	-
10	537216201	HARNESS -	1	-
10	537216202	HARNESS *USA*	1	-
1	544216401	GEAR -	1	-
2	537295902	GEAR HOUSING -	1	-
3	738219900	BALL BEARING -	1	-
4	505133301	SPARE PARTS KIT -	1	-
5	503252801	BALL BEARING -	1	-
6	735313110	CIRCLIP -	1	-
7	738210110	BALL BEARING -	1	-
8	738210112	BALL BEARING -	1	-
9	735311400	CIRCLIP -	1	-
10	735312810	CIRCLIP -	1	-
11	537147401	MAGNET -	1	-
12	503201501	SCREW -	1	-
13	574306801	CLAMP -	1	-
14	544087601	CLAMP -	1	-
15	537189501	SCREW -	1	-
16	732211601	LOCK NUT -	1	-

Ref.	Article N.	Description	Qty	Kit
17	503200210	SCREW IHSCFM -	1	-
18	574039501	LOCK NUT -	1	-
19	537351402	DRIVER -	1	-
20	537343501	SUPPORT FLANGE -	1	-
21	502291101	BLADE NUT -	1	-
22	503200325	SCREW IHSCFM -	2	-
1	537334301	INLET PIPE -	1	-
2	537371202	INSULATION WALL -	1	-
3	537371101	SLEEVE -	1	-
4	544019101	TUBULAR RIVET -	1	-
5	537373803	TUBULAR RIVET -	2	-
6	503200316	SCREW IHSCFM -	2	-
7	537341301	AIR DUCT -	1	-
8	575729001	CARBURETTOR *Zama C1Q-EL45*	1	-
9	503217550	SCREW IHSCFT -	2	-
10	503497101	GASKET -	1	-
11	537349001	LEVER -	1	-
12	544372701	SLEEVING BRACKET -	1	-
13	575841801	FILTER COVER -	1	-
14	537213209	KNOB -	1	-
15	575863702	FILTER HOLDER ASSY -	1	-
16	503212906	SCREW CCRPANT	2	-

Ref.	Article N.	Description	Qty	Kit
		-		
17	575841501	CHOKE CONTROL -	1	-
18	575841602	CHOKE LEVER -	1	-
19	544014601	LEVER -	1	-
20	544014701	BELLOWS -	1	-
21	544025801	BAR -	1	-
22	503231006	WASHER -	1	-
23	576215301	FILTER -	1	-
24	575863801	FRAME -	1	-
25	503200320	SCREW IHSCFM -	1	-
1	575729001	CARBURETTOR *Zama C1Q-EL45*	1	-
2	503479201	SCREW -	1	-
3	537417201	VALVE -	1	-
4	544372401	SPRING -	1	-
5	503480501	SCREW -	1	-
6	503974301	COVER -	1	-
7	504105601	DIAPHRAGM -	1	-
8	537020401	GASKET -	1	-
9	537387301	NOZZLE ASSY -	1	-
10	503480101	SCREW -	1	-
11	503480001	PIN RETAINING SCREW -	1	-
12	503665901	LEVER -	1	-

Ref.	Article N.	Description	Qty	Kit
13	503479701	VALVE -	1	-
14	537020301	SPRING -	1	-
15	501327101	SHAFT ASSY -	1	-
16	537370301	VALVE -	1	-
17	503481801	SCREW -	1	-
18	544372601	SPRING -	1	-
19	544372501	LEVER -	1	-
20	544427001	COLLAR -	1	-
21	504102701	SHAFT ASSY -	1	-
22	537012601	SPRING -	1	-
23	537012501	BALL -	1	-
24	503481301	STRAINER -	1	-
25	503479001	SCREW -	1	-
26	537416901	SCREW -	1	-
27	537417001	LIMITER CAP -	1	-
28	537387501	SCREW -	1	-
29	537385201	CLIP -	1	-
30	576270201	THROTTLE LEVER -	1	-
31	537020001	DIAPHRAGM PUMP -	1	-
32	537020101	GASKET -	1	-
33	537020201	COVER -	1	-
34	537020701	SCREW	1	-

Ref.	Article N.	Description	Qty	Kit
		-		
35	503481101	PIECE -	1	-
36	503479601	SCREW -	1	-
37	531004552	GASKET KIT *Set of gaskets*	1	-
1	574842901	CLUTCH COVER ASSY -	1	-
2	735312810	CIRCLIP -	1	-
3	738210104	BALL BEARING -	1	-
4	503240702	PARALLEL PIN -	2	-
5	537352901	CLUTCH DRUM -	1	-
6	735311400	CIRCLIP -	1	-
7	537340401	CLUTCH -	1	-
8	537427201	SPRING -	1	-
9	537046801	WASHER -	1	-
10	537415701	WASHER -	1	-
11	537418101	SCREW -	2	-
12	503217411	SCREW IHSCT -	1	-
13	537322701	ANTIVIBRATION ELEMENT -	1	-
14	537310101	COMPRESSION SLEEVE -	1	-
15	725533355	SCREW IHSCM -	1	-
16	575865801	COVER -	1	-
17	503200320	SCREW IHSCFM -	3	-
18	537418101	SCREW -	3	-

Ref.	Article N.	Description	Qty	Kit
1	585382201	CRANKCASE ASSY -	1	-
2	738210110	BALL BEARING -	2	-
3	503260202	SEALING RING -	2	-
4	593777601	GASKET -	1	-
5	503200230	SCREW IHSCFM -	4	-
6	593806001	GUIDE BUSHING -	2	-
7	537324201	INSERT -	1	-
1	575865002	CYLINDER COVER ASSY *Spare part with Captive Screw*	1	-
2	573994305	SCREW IHSCFMO *Captiv Screw*	1	-
3	575865701	PROTECTIVE PLATE *336 FR*	1	-
4	503200302	SCREW IHSCFM -	1	-
5	575864801	MUFFLER GUARD *Spare part with Captive Screw*	1	-
6	574477003	SCREW IHSCFMO *Captiv Screw*	2	-
7	576998614	LABEL *336 FR*	1	-
8	576998615	LABEL *135 R*	1	-
9	577231101	DAMPER *135 R*	1	-
1	574364301	CYLINDER ASSY	1	-
2	585998302	PISTON ASSY	1	-
3	503289054	PISTON RING	2	-
4	503289119	PISTON PIN	1	-
5	737441000	SNAP RING	2	-
6	503255501	NEEDLE BEARING	1	-
7	725533355	SCREW IHSCM	4	-
1	544328801	TANK ASSY -	1	-
2	503911001	SUSPENSION	4	-

Ref.	Article N.	Description	Qty	Kit
		-		
3	590324801	TANK CAP ASSY -	1	-
4	503936601	PURGE -	1	-
5	537042412	FUEL HOSE -	2	-
6	537052301	FUEL HOSE -	1	-
7	503735801	BUSHING -	2	-
8	537184901	O-RING -	1	-
9	503443201	FUEL FILTER -	1	-
1	537275702	HARNESS -	1	-
1	537275704	HARNESS *US*	1	-
2	537288301	BUCKLE -	1	-
3	537288401	BUCKLE -	1	-
4	537275901	HIP PAD -	1	-
5	502022801	HOOK -	1	-
6	502022902	HOOK -	1	-
7	502023002	LOCK -	1	-
8	586341001	SPRING -	1	-
9	735310920	E-CLIP -	1	-
10	503996101	BAND -	3	-
11	537113501	RETAINER -	1	-
12	503996103	BAND -	1	-
1	537249601	FLYWHEEL -	1	-

Ref.	Article N.	Description	Qty	Kit
2	731711651	HEXAGON NUT FLANGE -	1	-
3	544127001	IGNITION MODULE -	1	-
4	503202516	SCREW IHSCM -	2	-
5	503235109	SPARK PLUG -	1	-
6	537239301	CONTACT SPRING -	1	-
1	505408601	MUFFLER ASSY *CAT*	1	-
2	544116801	SPARK ARRESTER SCREEN -	1	-
3	724128759	SCREW CRPANM -	1	-
4	537333101	GASKET -	1	-
5	537340801	AIR CONDUCTOR -	1	-
6	503202963	SCREW IHSCFM -	2	-
7	503200320	SCREW IHSCFM -	1	-
1	501919701	TUBE ASSY -	1	-
2	537214101	TUBE -	1	-
3	537313901	GUIDE -	1	-
4	537360201	SPACER -	1	-
5	537360202	SPACER -	1	-
6	544183201	DRIVE SHAFT -	1	-
7	537130403	KNOB -	1	-
8	725233151	SCREW -	1	-
9	505161001	LOOP -	1	-
10	537350101	LOOP	1	-

Ref.	Article N.	Description	Qty	Kit
		-		
11	503217516	SCREW IHSCFT -	1	-
12	537376101	WIRING -	1	-
13	589295101	LABEL -	1	-
1	594729101	SHORT BLOCK ASSY *Assembled*	1	-
1	575840801	STARTER ASSY -	1	-
2	575840901	STARTER HOUSING *Spare part adapted for captive screw*	1	-
3	537325003	STARTER PULLEY -	1	-
4	503859901	RECOIL SPRING -	1	-
5	503218876	SCREW IHSCT -	1	-
6	503230080	WASHER -	1	-
7	537232501	STARTER HANDLE -	1	-
8	505305125	STARTER ROPE -	1	-
9	573994305	SCREW IHSCFMO *Captive screw*	3	-
10	577223601	DECAL -	1	-
11	503873305	STARTER PAWL -	1	-
12	503873502	STARTER PAWL -	2	-
13	503873601	SPRING -	2	-
14	735310820	E-CLIP -	2	-
1	537424507	HANDLE SYSTEM -	1	-
2	537160203	HANDLE HALF *HARD GRIP, GREY*	1	-
2	537160209	HANDLE HALF *SOFT GRIP, GREY + BLACK TPE*	1	-

Ref.	Article N.	Description	Qty	Kit
3	537160301	HANDLE HALF *HARD GRIP, GREY*	1	-
3	537160302	HANDLE HALF *SOFT GRIP, GREY + BLACK TPE*	1	-
4	503221013	HEXAGON NUT -	1	-
5	537359602	WIRING ASSY -	1	-
6	537377801	THROTTLE CABLE ASSY -	1	-
7	503216618	SCREW IHSCT -	1	-
8	503878507	SHORT CIRCUIT CABLE -	1	-
9	537419001	SWITCH -	1	-
10	506497701	THROTTLE CONTROL -	1	-
11	537174201	SPRING -	1	-
12	537160701	THROTTLE LOCKOUT -	1	-
13	537174301	SPRING -	1	-
14	503216618	SCREW IHSCT -	2	-
15	503200735	SCREW IHSCFM -	1	-
16	502199503	HANDLEBAR -	1	-
17	537172801	HANDLE -	1	-
18	537172901	COVER -	1	-
19	731231401	HEXAGON NUT -	1	-
20	503200245	SCREW IHSCFM -	1	-
21	503750002	HANDLEBAR BRACKET -	1	-
22	502211201	STAPLE -	1	-
1	576277401	HANDLEBAR BRACKET	1	-

Ref.	Article N.	Description	Qty	Kit
		-		
2	731231401	HEXAGON NUT -	4	-
3	502197101	SQUARE NUT -	1	-
4	502286101	CLIP -	1	-
5	502203801	KNOB -	1	-
6	725238351	SCREW EHHM -	1	-
7	576220101	COVER -	1	-
8	576220001	LID -	1	-
9	503200778	SCREW IHSCFM -	4	-
1	536805601	CRANKSHAFT ASSY	1	-
2	503260202	SEALING RING	2	-
3	738210110	BALL BEARING	2	-
4	503255501	NEEDLE BEARING	1	-

CRANKCASE

P 135 R, 336 FR
CRANKCASE

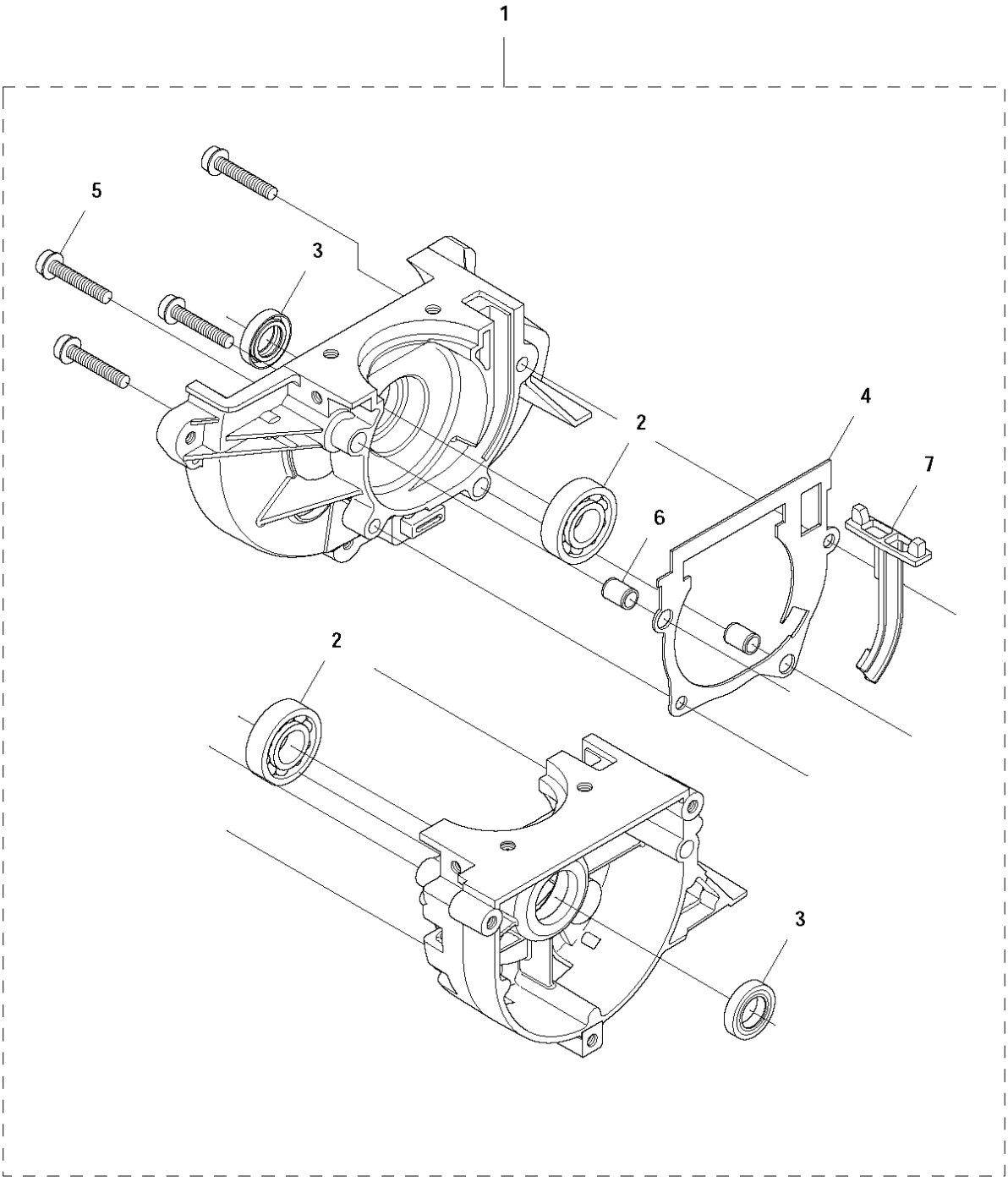

Ref.	Article N.	Description	Qty	Kit
1	501320402	SAW BLADE GUARD -	1	-
2	574530601	CLAMP *Spare part with Captive Screw*	1	-
3	573994304	SCREW IHSCFMO *Captive Screw*	2	-

Ref.	Article N.	Description	Qty	Kit
4	501320801	ADAPTER -	1	-
5	574532601	BLADE GUARD -	1	-
6	503200216	SCREW IHSCFM -	4	-
7	574039501	LOCK NUT -	4	-
8	537331603	SPLASH GUARD -	1	-
9	537396303	SPLASH GUARD -	1	-
10	503798802	BLADE -	1	-
11	503210716	SCREW IHSCT -	1	-
12	537387201	SNAP LOCKING -	4	-
13	537349403	TRIMMER GUARD ASSY -	1	-
14	503216825	SCREW IHSCFT -	1	-
15	503798802	BLADE -	1	-
16	544124501	RETAINER -	1	-
17	502448101	TRIMMER GUARD ASSY -	1	-
18	503216825	SCREW IHSCFT -	1	-
19	503798802	BLADE -	1	-
1	501192201	TOOL -	1	-
2	531009248	FILTER OIL -	1	-
3	503976501	GREASE -	1	-
4	502285901	STOP -	1	-
5	503801701	GREASE -	1	-
6	537362102	COMBINATION WRENCH	1	-

Ref.	Article N.	Description	Qty	Kit
		-		
7	544359101	TRANSPORT GUARD -	1	-
8	537312901	TRANSPORT GUARD -	1	-
9	503890102	SUPPORT CUP -	1	-
10	537216201	HARNESS -	1	-
10	537216202	HARNESS *USA*	1	-
1	544216401	GEAR -	1	-
2	537295902	GEAR HOUSING -	1	-
3	738219900	BALL BEARING -	1	-
4	505133301	SPARE PARTS KIT -	1	-
5	503252801	BALL BEARING -	1	-
6	735313110	CIRCLIP -	1	-
7	738210110	BALL BEARING -	1	-
8	738210112	BALL BEARING -	1	-
9	735311400	CIRCLIP -	1	-
10	735312810	CIRCLIP -	1	-
11	537147401	MAGNET -	1	-
12	503201501	SCREW -	1	-
13	574306801	CLAMP -	1	-
14	544087601	CLAMP -	1	-
15	537189501	SCREW -	1	-
16	732211601	LOCK NUT -	1	-

Ref.	Article N.	Description	Qty	Kit
17	503200210	SCREW IHSCFM -	1	-
18	574039501	LOCK NUT -	1	-
19	537351402	DRIVER -	1	-
20	537343501	SUPPORT FLANGE -	1	-
21	502291101	BLADE NUT -	1	-
22	503200325	SCREW IHSCFM -	2	-
1	537334301	INLET PIPE -	1	-
2	537371202	INSULATION WALL -	1	-
3	537371101	SLEEVE -	1	-
4	544019101	TUBULAR RIVET -	1	-
5	537373803	TUBULAR RIVET -	2	-
6	503200316	SCREW IHSCFM -	2	-
7	537341301	AIR DUCT -	1	-
8	575729001	CARBURETTOR *Zama C1Q-EL45*	1	-
9	503217550	SCREW IHSCFT -	2	-
10	503497101	GASKET -	1	-
11	537349001	LEVER -	1	-
12	544372701	SLEEVING BRACKET -	1	-
13	575841801	FILTER COVER -	1	-
14	537213209	KNOB -	1	-
15	575863702	FILTER HOLDER ASSY -	1	-
16	503212906	SCREW CCRPANT	2	-

Ref.	Article N.	Description	Qty	Kit
		-		
17	575841501	CHOKE CONTROL -	1	-
18	575841602	CHOKE LEVER -	1	-
19	544014601	LEVER -	1	-
20	544014701	BELLOWS -	1	-
21	544025801	BAR -	1	-
22	503231006	WASHER -	1	-
23	576215301	FILTER -	1	-
24	575863801	FRAME -	1	-
25	503200320	SCREW IHSCFM -	1	-
1	575729001	CARBURETTOR *Zama C1Q-EL45*	1	-
2	503479201	SCREW -	1	-
3	537417201	VALVE -	1	-
4	544372401	SPRING -	1	-
5	503480501	SCREW -	1	-
6	503974301	COVER -	1	-
7	504105601	DIAPHRAGM -	1	-
8	537020401	GASKET -	1	-
9	537387301	NOZZLE ASSY -	1	-
10	503480101	SCREW -	1	-
11	503480001	PIN RETAINING SCREW -	1	-
12	503665901	LEVER -	1	-

Ref.	Article N.	Description	Qty	Kit
13	503479701	VALVE -	1	-
14	537020301	SPRING -	1	-
15	501327101	SHAFT ASSY -	1	-
16	537370301	VALVE -	1	-
17	503481801	SCREW -	1	-
18	544372601	SPRING -	1	-
19	544372501	LEVER -	1	-
20	544427001	COLLAR -	1	-
21	504102701	SHAFT ASSY -	1	-
22	537012601	SPRING -	1	-
23	537012501	BALL -	1	-
24	503481301	STRAINER -	1	-
25	503479001	SCREW -	1	-
26	537416901	SCREW -	1	-
27	537417001	LIMITER CAP -	1	-
28	537387501	SCREW -	1	-
29	537385201	CLIP -	1	-
30	576270201	THROTTLE LEVER -	1	-
31	537020001	DIAPHRAGM PUMP -	1	-
32	537020101	GASKET -	1	-
33	537020201	COVER -	1	-
34	537020701	SCREW	1	-

Ref.	Article N.	Description	Qty	Kit
		-		
35	503481101	PIECE -	1	-
36	503479601	SCREW -	1	-
37	531004552	GASKET KIT *Set of gaskets*	1	-
1	574842901	CLUTCH COVER ASSY -	1	-
2	735312810	CIRCLIP -	1	-
3	738210104	BALL BEARING -	1	-
4	503240702	PARALLEL PIN -	2	-
5	537352901	CLUTCH DRUM -	1	-
6	735311400	CIRCLIP -	1	-
7	537340401	CLUTCH -	1	-
8	537427201	SPRING -	1	-
9	537046801	WASHER -	1	-
10	537415701	WASHER -	1	-
11	537418101	SCREW -	2	-
12	503217411	SCREW IHSCT -	1	-
13	537322701	ANTIVIBRATION ELEMENT -	1	-
14	537310101	COMPRESSION SLEEVE -	1	-
15	725533355	SCREW IHSCM -	1	-
16	575865801	COVER -	1	-
17	503200320	SCREW IHSCFM -	3	-
18	537418101	SCREW -	3	-

Ref.	Article N.	Description	Qty	Kit
1	585382201	CRANKCASE ASSY -	1	-
2	738210110	BALL BEARING -	2	-
3	503260202	SEALING RING -	2	-
4	593777601	GASKET -	1	-
5	503200230	SCREW IHSCFM -	4	-
6	593806001	GUIDE BUSHING -	2	-
7	537324201	INSERT -	1	-
1	575865002	CYLINDER COVER ASSY *Spare part with Captive Screw*	1	-
2	573994305	SCREW IHSCFMO *Captiv Screw*	1	-
3	575865701	PROTECTIVE PLATE *336 FR*	1	-
4	503200302	SCREW IHSCFM -	1	-
5	575864801	MUFFLER GUARD *Spare part with Captive Screw*	1	-
6	574477003	SCREW IHSCFMO *Captiv Screw*	2	-
7	576998614	LABEL *336 FR*	1	-
8	576998615	LABEL *135 R*	1	-
9	577231101	DAMPER *135 R*	1	-
1	574364301	CYLINDER ASSY	1	-
2	585998302	PISTON ASSY	1	-
3	503289054	PISTON RING	2	-
4	503289119	PISTON PIN	1	-
5	737441000	SNAP RING	2	-
6	503255501	NEEDLE BEARING	1	-
7	725533355	SCREW IHSCM	4	-
1	544328801	TANK ASSY -	1	-
2	503911001	SUSPENSION	4	-

Ref.	Article N.	Description	Qty	Kit
		-		
3	590324801	TANK CAP ASSY -	1	-
4	503936601	PURGE -	1	-
5	537042412	FUEL HOSE -	2	-
6	537052301	FUEL HOSE -	1	-
7	503735801	BUSHING -	2	-
8	537184901	O-RING -	1	-
9	503443201	FUEL FILTER -	1	-
1	537275702	HARNESS -	1	-
1	537275704	HARNESS *US*	1	-
2	537288301	BUCKLE -	1	-
3	537288401	BUCKLE -	1	-
4	537275901	HIP PAD -	1	-
5	502022801	HOOK -	1	-
6	502022902	HOOK -	1	-
7	502023002	LOCK -	1	-
8	586341001	SPRING -	1	-
9	735310920	E-CLIP -	1	-
10	503996101	BAND -	3	-
11	537113501	RETAINER -	1	-
12	503996103	BAND -	1	-
1	537249601	FLYWHEEL -	1	-

Ref.	Article N.	Description	Qty	Kit
2	731711651	HEXAGON NUT FLANGE -	1	-
3	544127001	IGNITION MODULE -	1	-
4	503202516	SCREW IHSCM -	2	-
5	503235109	SPARK PLUG -	1	-
6	537239301	CONTACT SPRING -	1	-
1	505408601	MUFFLER ASSY *CAT*	1	-
2	544116801	SPARK ARRESTER SCREEN -	1	-
3	724128759	SCREW CRPANM -	1	-
4	537333101	GASKET -	1	-
5	537340801	AIR CONDUCTOR -	1	-
6	503202963	SCREW IHSCFM -	2	-
7	503200320	SCREW IHSCFM -	1	-
1	501919701	TUBE ASSY -	1	-
2	537214101	TUBE -	1	-
3	537313901	GUIDE -	1	-
4	537360201	SPACER -	1	-
5	537360202	SPACER -	1	-
6	544183201	DRIVE SHAFT -	1	-
7	537130403	KNOB -	1	-
8	725233151	SCREW -	1	-
9	505161001	LOOP -	1	-
10	537350101	LOOP	1	-

Ref.	Article N.	Description	Qty	Kit
		-		
11	503217516	SCREW IHSCFT -	1	-
12	537376101	WIRING -	1	-
13	589295101	LABEL -	1	-
1	594729101	SHORT BLOCK ASSY *Assembled*	1	-
1	575840801	STARTER ASSY -	1	-
2	575840901	STARTER HOUSING *Spare part adapted for captive screw*	1	-
3	537325003	STARTER PULLEY -	1	-
4	503859901	RECOIL SPRING -	1	-
5	503218876	SCREW IHSCT -	1	-
6	503230080	WASHER -	1	-
7	537232501	STARTER HANDLE -	1	-
8	505305125	STARTER ROPE -	1	-
9	573994305	SCREW IHSCFMO *Captive screw*	3	-
10	577223601	DECAL -	1	-
11	503873305	STARTER PAWL -	1	-
12	503873502	STARTER PAWL -	2	-
13	503873601	SPRING -	2	-
14	735310820	E-CLIP -	2	-
1	537424507	HANDLE SYSTEM -	1	-
2	537160203	HANDLE HALF *HARD GRIP, GREY*	1	-
2	537160209	HANDLE HALF *SOFT GRIP, GREY + BLACK TPE*	1	-

Ref.	Article N.	Description	Qty	Kit
3	537160301	HANDLE HALF *HARD GRIP, GREY*	1	-
3	537160302	HANDLE HALF *SOFT GRIP, GREY + BLACK TPE*	1	-
4	503221013	HEXAGON NUT -	1	-
5	537359602	WIRING ASSY -	1	-
6	537377801	THROTTLE CABLE ASSY -	1	-
7	503216618	SCREW IHSCT -	1	-
8	503878507	SHORT CIRCUIT CABLE -	1	-
9	537419001	SWITCH -	1	-
10	506497701	THROTTLE CONTROL -	1	-
11	537174201	SPRING -	1	-
12	537160701	THROTTLE LOCKOUT -	1	-
13	537174301	SPRING -	1	-
14	503216618	SCREW IHSCT -	2	-
15	503200735	SCREW IHSCFM -	1	-
16	502199503	HANDLEBAR -	1	-
17	537172801	HANDLE -	1	-
18	537172901	COVER -	1	-
19	731231401	HEXAGON NUT -	1	-
20	503200245	SCREW IHSCFM -	1	-
21	503750002	HANDLEBAR BRACKET -	1	-
22	502211201	STAPLE -	1	-
1	576277401	HANDLEBAR BRACKET	1	-

Ref.	Article N.	Description	Qty	Kit
		-		
2	731231401	HEXAGON NUT -	4	-
3	502197101	SQUARE NUT -	1	-
4	502286101	CLIP -	1	-
5	502203801	KNOB -	1	-
6	725238351	SCREW EHHM -	1	-
7	576220101	COVER -	1	-
8	576220001	LID -	1	-
9	503200778	SCREW IHSCFM -	4	-
1	536805601	CRANKSHAFT ASSY	1	-
2	503260202	SEALING RING	2	-
3	738210110	BALL BEARING	2	-
4	503255501	NEEDLE BEARING	1	-

CYLINDER COVER

G 135 R, 336 FR
CYLINDER COVER

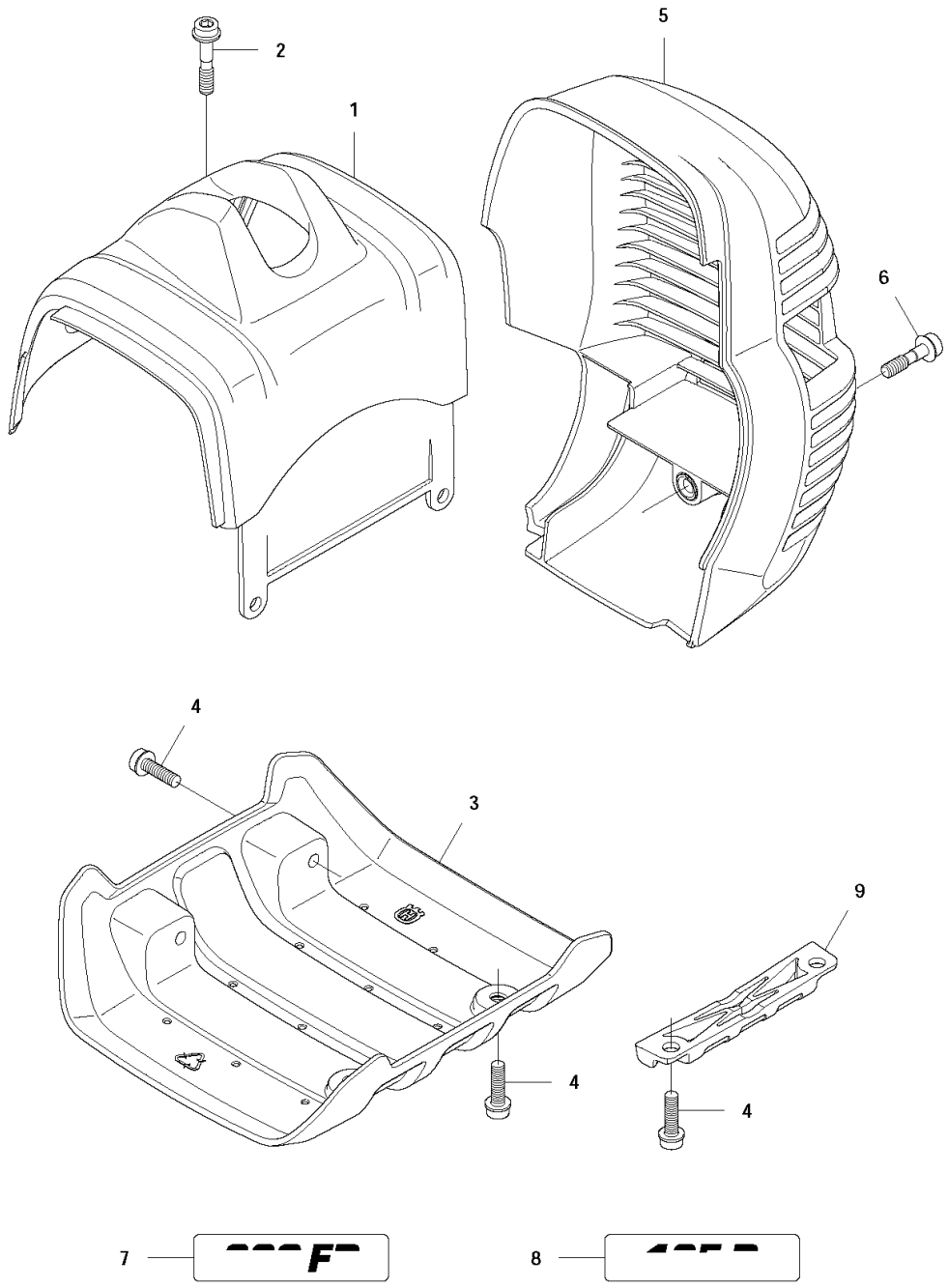

Ref.	Article N.	Description	Qty	Kit
1	501320402	SAW BLADE GUARD -	1	-
2	574530601	CLAMP *Spare part with Captive Screw*	1	-
3	573994304	SCREW IHSCFMO *Captive Screw*	2	-

Ref.	Article N.	Description	Qty	Kit
4	501320801	ADAPTER -	1	-
5	574532601	BLADE GUARD -	1	-
6	503200216	SCREW IHSCFM -	4	-
7	574039501	LOCK NUT -	4	-
8	537331603	SPLASH GUARD -	1	-
9	537396303	SPLASH GUARD -	1	-
10	503798802	BLADE -	1	-
11	503210716	SCREW IHSCT -	1	-
12	537387201	SNAP LOCKING -	4	-
13	537349403	TRIMMER GUARD ASSY -	1	-
14	503216825	SCREW IHSCFT -	1	-
15	503798802	BLADE -	1	-
16	544124501	RETAINER -	1	-
17	502448101	TRIMMER GUARD ASSY -	1	-
18	503216825	SCREW IHSCFT -	1	-
19	503798802	BLADE -	1	-
1	501192201	TOOL -	1	-
2	531009248	FILTER OIL -	1	-
3	503976501	GREASE -	1	-
4	502285901	STOP -	1	-
5	503801701	GREASE -	1	-
6	537362102	COMBINATION WRENCH	1	-

Ref.	Article N.	Description	Qty	Kit
		-		
7	544359101	TRANSPORT GUARD -	1	-
8	537312901	TRANSPORT GUARD -	1	-
9	503890102	SUPPORT CUP -	1	-
10	537216201	HARNESS -	1	-
10	537216202	HARNESS *USA*	1	-
1	544216401	GEAR -	1	-
2	537295902	GEAR HOUSING -	1	-
3	738219900	BALL BEARING -	1	-
4	505133301	SPARE PARTS KIT -	1	-
5	503252801	BALL BEARING -	1	-
6	735313110	CIRCLIP -	1	-
7	738210110	BALL BEARING -	1	-
8	738210112	BALL BEARING -	1	-
9	735311400	CIRCLIP -	1	-
10	735312810	CIRCLIP -	1	-
11	537147401	MAGNET -	1	-
12	503201501	SCREW -	1	-
13	574306801	CLAMP -	1	-
14	544087601	CLAMP -	1	-
15	537189501	SCREW -	1	-
16	732211601	LOCK NUT -	1	-

Ref.	Article N.	Description	Qty	Kit
17	503200210	SCREW IHSCFM -	1	-
18	574039501	LOCK NUT -	1	-
19	537351402	DRIVER -	1	-
20	537343501	SUPPORT FLANGE -	1	-
21	502291101	BLADE NUT -	1	-
22	503200325	SCREW IHSCFM -	2	-
1	537334301	INLET PIPE -	1	-
2	537371202	INSULATION WALL -	1	-
3	537371101	SLEEVE -	1	-
4	544019101	TUBULAR RIVET -	1	-
5	537373803	TUBULAR RIVET -	2	-
6	503200316	SCREW IHSCFM -	2	-
7	537341301	AIR DUCT -	1	-
8	575729001	CARBURETTOR *Zama C1Q-EL45*	1	-
9	503217550	SCREW IHSCFT -	2	-
10	503497101	GASKET -	1	-
11	537349001	LEVER -	1	-
12	544372701	SLEEVING BRACKET -	1	-
13	575841801	FILTER COVER -	1	-
14	537213209	KNOB -	1	-
15	575863702	FILTER HOLDER ASSY -	1	-
16	503212906	SCREW CCRPANT	2	-

Ref.	Article N.	Description	Qty	Kit
		-		
17	575841501	CHOKE CONTROL -	1	-
18	575841602	CHOKE LEVER -	1	-
19	544014601	LEVER -	1	-
20	544014701	BELLOWS -	1	-
21	544025801	BAR -	1	-
22	503231006	WASHER -	1	-
23	576215301	FILTER -	1	-
24	575863801	FRAME -	1	-
25	503200320	SCREW IHSCFM -	1	-
1	575729001	CARBURETTOR *Zama C1Q-EL45*	1	-
2	503479201	SCREW -	1	-
3	537417201	VALVE -	1	-
4	544372401	SPRING -	1	-
5	503480501	SCREW -	1	-
6	503974301	COVER -	1	-
7	504105601	DIAPHRAGM -	1	-
8	537020401	GASKET -	1	-
9	537387301	NOZZLE ASSY -	1	-
10	503480101	SCREW -	1	-
11	503480001	PIN RETAINING SCREW -	1	-
12	503665901	LEVER -	1	-

Ref.	Article N.	Description	Qty	Kit
13	503479701	VALVE -	1	-
14	537020301	SPRING -	1	-
15	501327101	SHAFT ASSY -	1	-
16	537370301	VALVE -	1	-
17	503481801	SCREW -	1	-
18	544372601	SPRING -	1	-
19	544372501	LEVER -	1	-
20	544427001	COLLAR -	1	-
21	504102701	SHAFT ASSY -	1	-
22	537012601	SPRING -	1	-
23	537012501	BALL -	1	-
24	503481301	STRAINER -	1	-
25	503479001	SCREW -	1	-
26	537416901	SCREW -	1	-
27	537417001	LIMITER CAP -	1	-
28	537387501	SCREW -	1	-
29	537385201	CLIP -	1	-
30	576270201	THROTTLE LEVER -	1	-
31	537020001	DIAPHRAGM PUMP -	1	-
32	537020101	GASKET -	1	-
33	537020201	COVER -	1	-
34	537020701	SCREW	1	-

Ref.	Article N.	Description	Qty	Kit
		-		
35	503481101	PIECE -	1	-
36	503479601	SCREW -	1	-
37	531004552	GASKET KIT *Set of gaskets*	1	-
1	574842901	CLUTCH COVER ASSY -	1	-
2	735312810	CIRCLIP -	1	-
3	738210104	BALL BEARING -	1	-
4	503240702	PARALLEL PIN -	2	-
5	537352901	CLUTCH DRUM -	1	-
6	735311400	CIRCLIP -	1	-
7	537340401	CLUTCH -	1	-
8	537427201	SPRING -	1	-
9	537046801	WASHER -	1	-
10	537415701	WASHER -	1	-
11	537418101	SCREW -	2	-
12	503217411	SCREW IHSCT -	1	-
13	537322701	ANTIVIBRATION ELEMENT -	1	-
14	537310101	COMPRESSION SLEEVE -	1	-
15	725533355	SCREW IHSCM -	1	-
16	575865801	COVER -	1	-
17	503200320	SCREW IHSCFM -	3	-
18	537418101	SCREW -	3	-

Ref.	Article N.	Description	Qty	Kit
1	585382201	CRANKCASE ASSY -	1	-
2	738210110	BALL BEARING -	2	-
3	503260202	SEALING RING -	2	-
4	593777601	GASKET -	1	-
5	503200230	SCREW IHSCFM -	4	-
6	593806001	GUIDE BUSHING -	2	-
7	537324201	INSERT -	1	-
1	575865002	CYLINDER COVER ASSY *Spare part with Captive Screw*	1	-
2	573994305	SCREW IHSCFMO *Captiv Screw*	1	-
3	575865701	PROTECTIVE PLATE *336 FR*	1	-
4	503200302	SCREW IHSCFM -	1	-
5	575864801	MUFFLER GUARD *Spare part with Captive Screw*	1	-
6	574477003	SCREW IHSCFMO *Captiv Screw*	2	-
7	576998614	LABEL *336 FR*	1	-
8	576998615	LABEL *135 R*	1	-
9	577231101	DAMPER *135 R*	1	-
1	574364301	CYLINDER ASSY	1	-
2	585998302	PISTON ASSY	1	-
3	503289054	PISTON RING	2	-
4	503289119	PISTON PIN	1	-
5	737441000	SNAP RING	2	-
6	503255501	NEEDLE BEARING	1	-
7	725533355	SCREW IHSCM	4	-
1	544328801	TANK ASSY -	1	-
2	503911001	SUSPENSION	4	-

Ref.	Article N.	Description	Qty	Kit
		-		
3	590324801	TANK CAP ASSY -	1	-
4	503936601	PURGE -	1	-
5	537042412	FUEL HOSE -	2	-
6	537052301	FUEL HOSE -	1	-
7	503735801	BUSHING -	2	-
8	537184901	O-RING -	1	-
9	503443201	FUEL FILTER -	1	-
1	537275702	HARNESS -	1	-
1	537275704	HARNESS *US*	1	-
2	537288301	BUCKLE -	1	-
3	537288401	BUCKLE -	1	-
4	537275901	HIP PAD -	1	-
5	502022801	HOOK -	1	-
6	502022902	HOOK -	1	-
7	502023002	LOCK -	1	-
8	586341001	SPRING -	1	-
9	735310920	E-CLIP -	1	-
10	503996101	BAND -	3	-
11	537113501	RETAINER -	1	-
12	503996103	BAND -	1	-
1	537249601	FLYWHEEL -	1	-

Ref.	Article N.	Description	Qty	Kit
2	731711651	HEXAGON NUT FLANGE -	1	-
3	544127001	IGNITION MODULE -	1	-
4	503202516	SCREW IHSCM -	2	-
5	503235109	SPARK PLUG -	1	-
6	537239301	CONTACT SPRING -	1	-
1	505408601	MUFFLER ASSY *CAT*	1	-
2	544116801	SPARK ARRESTER SCREEN -	1	-
3	724128759	SCREW CRPANM -	1	-
4	537333101	GASKET -	1	-
5	537340801	AIR CONDUCTOR -	1	-
6	503202963	SCREW IHSCFM -	2	-
7	503200320	SCREW IHSCFM -	1	-
1	501919701	TUBE ASSY -	1	-
2	537214101	TUBE -	1	-
3	537313901	GUIDE -	1	-
4	537360201	SPACER -	1	-
5	537360202	SPACER -	1	-
6	544183201	DRIVE SHAFT -	1	-
7	537130403	KNOB -	1	-
8	725233151	SCREW -	1	-
9	505161001	LOOP -	1	-
10	537350101	LOOP	1	-

Ref.	Article N.	Description	Qty	Kit
		-		
11	503217516	SCREW IHSCFT -	1	-
12	537376101	WIRING -	1	-
13	589295101	LABEL -	1	-
1	594729101	SHORT BLOCK ASSY *Assembled*	1	-
1	575840801	STARTER ASSY -	1	-
2	575840901	STARTER HOUSING *Spare part adapted for captive screw*	1	-
3	537325003	STARTER PULLEY -	1	-
4	503859901	RECOIL SPRING -	1	-
5	503218876	SCREW IHSCT -	1	-
6	503230080	WASHER -	1	-
7	537232501	STARTER HANDLE -	1	-
8	505305125	STARTER ROPE -	1	-
9	573994305	SCREW IHSCFMO *Captive screw*	3	-
10	577223601	DECAL -	1	-
11	503873305	STARTER PAWL -	1	-
12	503873502	STARTER PAWL -	2	-
13	503873601	SPRING -	2	-
14	735310820	E-CLIP -	2	-
1	537424507	HANDLE SYSTEM -	1	-
2	537160203	HANDLE HALF *HARD GRIP, GREY*	1	-
2	537160209	HANDLE HALF *SOFT GRIP, GREY + BLACK TPE*	1	-

Ref.	Article N.	Description	Qty	Kit
3	537160301	HANDLE HALF *HARD GRIP, GREY*	1	-
3	537160302	HANDLE HALF *SOFT GRIP, GREY + BLACK TPE*	1	-
4	503221013	HEXAGON NUT -	1	-
5	537359602	WIRING ASSY -	1	-
6	537377801	THROTTLE CABLE ASSY -	1	-
7	503216618	SCREW IHSCT -	1	-
8	503878507	SHORT CIRCUIT CABLE -	1	-
9	537419001	SWITCH -	1	-
10	506497701	THROTTLE CONTROL -	1	-
11	537174201	SPRING -	1	-
12	537160701	THROTTLE LOCKOUT -	1	-
13	537174301	SPRING -	1	-
14	503216618	SCREW IHSCT -	2	-
15	503200735	SCREW IHSCFM -	1	-
16	502199503	HANDLEBAR -	1	-
17	537172801	HANDLE -	1	-
18	537172901	COVER -	1	-
19	731231401	HEXAGON NUT -	1	-
20	503200245	SCREW IHSCFM -	1	-
21	503750002	HANDLEBAR BRACKET -	1	-
22	502211201	STAPLE -	1	-
1	576277401	HANDLEBAR BRACKET	1	-

Ref.	Article N.	Description	Qty	Kit
		-		
2	731231401	HEXAGON NUT -	4	-
3	502197101	SQUARE NUT -	1	-
4	502286101	CLIP -	1	-
5	502203801	KNOB -	1	-
6	725238351	SCREW EHHM -	1	-
7	576220101	COVER -	1	-
8	576220001	LID -	1	-
9	503200778	SCREW IHSCFM -	4	-
1	536805601	CRANKSHAFT ASSY	1	-
2	503260202	SEALING RING	2	-
3	738210110	BALL BEARING	2	-
4	503255501	NEEDLE BEARING	1	-

CYLINDER PISTON

M 135 R, 336 FR
CYLINDER & PISTON

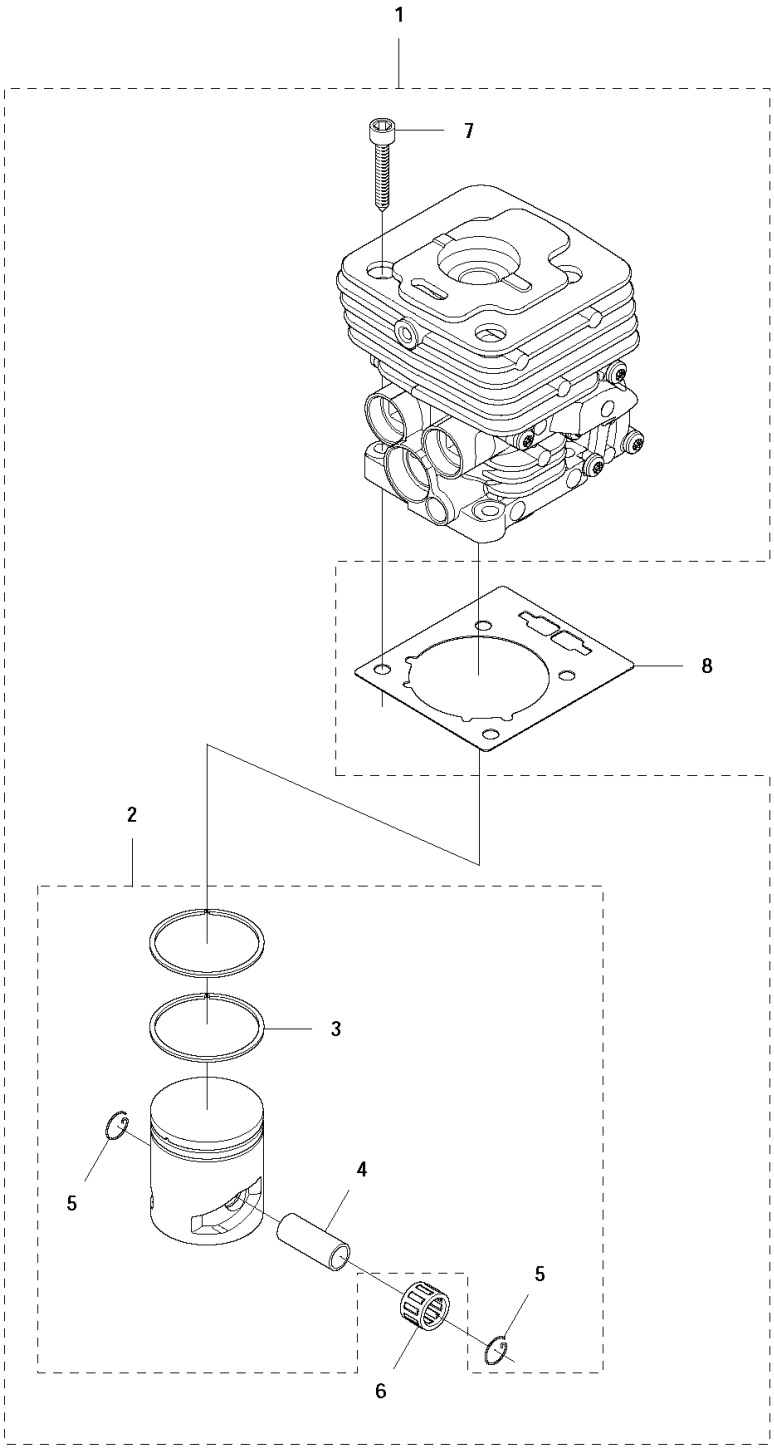

Ref.	Article N.	Description	Qty	Kit
1	501320402	SAW BLADE GUARD -	1	-
2	574530601	CLAMP *Spare part with Captive Screw*	1	-
3	573994304	SCREW IHSCFMO *Captive Screw*	2	-

Ref.	Article N.	Description	Qty	Kit
4	501320801	ADAPTER -	1	-
5	574532601	BLADE GUARD -	1	-
6	503200216	SCREW IHSCFM -	4	-
7	574039501	LOCK NUT -	4	-
8	537331603	SPLASH GUARD -	1	-
9	537396303	SPLASH GUARD -	1	-
10	503798802	BLADE -	1	-
11	503210716	SCREW IHSCT -	1	-
12	537387201	SNAP LOCKING -	4	-
13	537349403	TRIMMER GUARD ASSY -	1	-
14	503216825	SCREW IHSCFT -	1	-
15	503798802	BLADE -	1	-
16	544124501	RETAINER -	1	-
17	502448101	TRIMMER GUARD ASSY -	1	-
18	503216825	SCREW IHSCFT -	1	-
19	503798802	BLADE -	1	-
1	501192201	TOOL -	1	-
2	531009248	FILTER OIL -	1	-
3	503976501	GREASE -	1	-
4	502285901	STOP -	1	-
5	503801701	GREASE -	1	-
6	537362102	COMBINATION WRENCH	1	-

Ref.	Article N.	Description	Qty	Kit
		-		
7	544359101	TRANSPORT GUARD -	1	-
8	537312901	TRANSPORT GUARD -	1	-
9	503890102	SUPPORT CUP -	1	-
10	537216201	HARNESS -	1	-
10	537216202	HARNESS *USA*	1	-
1	544216401	GEAR -	1	-
2	537295902	GEAR HOUSING -	1	-
3	738219900	BALL BEARING -	1	-
4	505133301	SPARE PARTS KIT -	1	-
5	503252801	BALL BEARING -	1	-
6	735313110	CIRCLIP -	1	-
7	738210110	BALL BEARING -	1	-
8	738210112	BALL BEARING -	1	-
9	735311400	CIRCLIP -	1	-
10	735312810	CIRCLIP -	1	-
11	537147401	MAGNET -	1	-
12	503201501	SCREW -	1	-
13	574306801	CLAMP -	1	-
14	544087601	CLAMP -	1	-
15	537189501	SCREW -	1	-
16	732211601	LOCK NUT -	1	-

Ref.	Article N.	Description	Qty	Kit
17	503200210	SCREW IHSCFM -	1	-
18	574039501	LOCK NUT -	1	-
19	537351402	DRIVER -	1	-
20	537343501	SUPPORT FLANGE -	1	-
21	502291101	BLADE NUT -	1	-
22	503200325	SCREW IHSCFM -	2	-
1	537334301	INLET PIPE -	1	-
2	537371202	INSULATION WALL -	1	-
3	537371101	SLEEVE -	1	-
4	544019101	TUBULAR RIVET -	1	-
5	537373803	TUBULAR RIVET -	2	-
6	503200316	SCREW IHSCFM -	2	-
7	537341301	AIR DUCT -	1	-
8	575729001	CARBURETTOR *Zama C1Q-EL45*	1	-
9	503217550	SCREW IHSCFT -	2	-
10	503497101	GASKET -	1	-
11	537349001	LEVER -	1	-
12	544372701	SLEEVING BRACKET -	1	-
13	575841801	FILTER COVER -	1	-
14	537213209	KNOB -	1	-
15	575863702	FILTER HOLDER ASSY -	1	-
16	503212906	SCREW CCRPANT	2	-

Ref.	Article N.	Description	Qty	Kit
		-		
17	575841501	CHOKE CONTROL -	1	-
18	575841602	CHOKE LEVER -	1	-
19	544014601	LEVER -	1	-
20	544014701	BELLOWS -	1	-
21	544025801	BAR -	1	-
22	503231006	WASHER -	1	-
23	576215301	FILTER -	1	-
24	575863801	FRAME -	1	-
25	503200320	SCREW IHSCFM -	1	-
1	575729001	CARBURETTOR *Zama C1Q-EL45*	1	-
2	503479201	SCREW -	1	-
3	537417201	VALVE -	1	-
4	544372401	SPRING -	1	-
5	503480501	SCREW -	1	-
6	503974301	COVER -	1	-
7	504105601	DIAPHRAGM -	1	-
8	537020401	GASKET -	1	-
9	537387301	NOZZLE ASSY -	1	-
10	503480101	SCREW -	1	-
11	503480001	PIN RETAINING SCREW -	1	-
12	503665901	LEVER -	1	-

Ref.	Article N.	Description	Qty	Kit
13	503479701	VALVE -	1	-
14	537020301	SPRING -	1	-
15	501327101	SHAFT ASSY -	1	-
16	537370301	VALVE -	1	-
17	503481801	SCREW -	1	-
18	544372601	SPRING -	1	-
19	544372501	LEVER -	1	-
20	544427001	COLLAR -	1	-
21	504102701	SHAFT ASSY -	1	-
22	537012601	SPRING -	1	-
23	537012501	BALL -	1	-
24	503481301	STRAINER -	1	-
25	503479001	SCREW -	1	-
26	537416901	SCREW -	1	-
27	537417001	LIMITER CAP -	1	-
28	537387501	SCREW -	1	-
29	537385201	CLIP -	1	-
30	576270201	THROTTLE LEVER -	1	-
31	537020001	DIAPHRAGM PUMP -	1	-
32	537020101	GASKET -	1	-
33	537020201	COVER -	1	-
34	537020701	SCREW	1	-

Ref.	Article N.	Description	Qty	Kit
		-		
35	503481101	PIECE -	1	-
36	503479601	SCREW -	1	-
37	531004552	GASKET KIT *Set of gaskets*	1	-
1	574842901	CLUTCH COVER ASSY -	1	-
2	735312810	CIRCLIP -	1	-
3	738210104	BALL BEARING -	1	-
4	503240702	PARALLEL PIN -	2	-
5	537352901	CLUTCH DRUM -	1	-
6	735311400	CIRCLIP -	1	-
7	537340401	CLUTCH -	1	-
8	537427201	SPRING -	1	-
9	537046801	WASHER -	1	-
10	537415701	WASHER -	1	-
11	537418101	SCREW -	2	-
12	503217411	SCREW IHSCT -	1	-
13	537322701	ANTIVIBRATION ELEMENT -	1	-
14	537310101	COMPRESSION SLEEVE -	1	-
15	725533355	SCREW IHSCM -	1	-
16	575865801	COVER -	1	-
17	503200320	SCREW IHSCFM -	3	-
18	537418101	SCREW -	3	-

Ref.	Article N.	Description	Qty	Kit
1	585382201	CRANKCASE ASSY -	1	-
2	738210110	BALL BEARING -	2	-
3	503260202	SEALING RING -	2	-
4	593777601	GASKET -	1	-
5	503200230	SCREW IHSCFM -	4	-
6	593806001	GUIDE BUSHING -	2	-
7	537324201	INSERT -	1	-
1	575865002	CYLINDER COVER ASSY *Spare part with Captive Screw*	1	-
2	573994305	SCREW IHSCFMO *Captiv Screw*	1	-
3	575865701	PROTECTIVE PLATE *336 FR*	1	-
4	503200302	SCREW IHSCFM -	1	-
5	575864801	MUFFLER GUARD *Spare part with Captive Screw*	1	-
6	574477003	SCREW IHSCFMO *Captiv Screw*	2	-
7	576998614	LABEL *336 FR*	1	-
8	576998615	LABEL *135 R*	1	-
9	577231101	DAMPER *135 R*	1	-
1	574364301	CYLINDER ASSY	1	-
2	585998302	PISTON ASSY	1	-
3	503289054	PISTON RING	2	-
4	503289119	PISTON PIN	1	-
5	737441000	SNAP RING	2	-
6	503255501	NEEDLE BEARING	1	-
7	725533355	SCREW IHSCM	4	-
1	544328801	TANK ASSY -	1	-
2	503911001	SUSPENSION	4	-

Ref.	Article N.	Description	Qty	Kit
		-		
3	590324801	TANK CAP ASSY -	1	-
4	503936601	PURGE -	1	-
5	537042412	FUEL HOSE -	2	-
6	537052301	FUEL HOSE -	1	-
7	503735801	BUSHING -	2	-
8	537184901	O-RING -	1	-
9	503443201	FUEL FILTER -	1	-
1	537275702	HARNESS -	1	-
1	537275704	HARNESS *US*	1	-
2	537288301	BUCKLE -	1	-
3	537288401	BUCKLE -	1	-
4	537275901	HIP PAD -	1	-
5	502022801	HOOK -	1	-
6	502022902	HOOK -	1	-
7	502023002	LOCK -	1	-
8	586341001	SPRING -	1	-
9	735310920	E-CLIP -	1	-
10	503996101	BAND -	3	-
11	537113501	RETAINER -	1	-
12	503996103	BAND -	1	-
1	537249601	FLYWHEEL -	1	-

Ref.	Article N.	Description	Qty	Kit
2	731711651	HEXAGON NUT FLANGE -	1	-
3	544127001	IGNITION MODULE -	1	-
4	503202516	SCREW IHSCM -	2	-
5	503235109	SPARK PLUG -	1	-
6	537239301	CONTACT SPRING -	1	-
1	505408601	MUFFLER ASSY *CAT*	1	-
2	544116801	SPARK ARRESTER SCREEN -	1	-
3	724128759	SCREW CRPANM -	1	-
4	537333101	GASKET -	1	-
5	537340801	AIR CONDUCTOR -	1	-
6	503202963	SCREW IHSCFM -	2	-
7	503200320	SCREW IHSCFM -	1	-
1	501919701	TUBE ASSY -	1	-
2	537214101	TUBE -	1	-
3	537313901	GUIDE -	1	-
4	537360201	SPACER -	1	-
5	537360202	SPACER -	1	-
6	544183201	DRIVE SHAFT -	1	-
7	537130403	KNOB -	1	-
8	725233151	SCREW -	1	-
9	505161001	LOOP -	1	-
10	537350101	LOOP	1	-

Ref.	Article N.	Description	Qty	Kit
		-		
11	503217516	SCREW IHSCFT -	1	-
12	537376101	WIRING -	1	-
13	589295101	LABEL -	1	-
1	594729101	SHORT BLOCK ASSY *Assembled*	1	-
1	575840801	STARTER ASSY -	1	-
2	575840901	STARTER HOUSING *Spare part adapted for captive screw*	1	-
3	537325003	STARTER PULLEY -	1	-
4	503859901	RECOIL SPRING -	1	-
5	503218876	SCREW IHSCT -	1	-
6	503230080	WASHER -	1	-
7	537232501	STARTER HANDLE -	1	-
8	505305125	STARTER ROPE -	1	-
9	573994305	SCREW IHSCFMO *Captive screw*	3	-
10	577223601	DECAL -	1	-
11	503873305	STARTER PAWL -	1	-
12	503873502	STARTER PAWL -	2	-
13	503873601	SPRING -	2	-
14	735310820	E-CLIP -	2	-
1	537424507	HANDLE SYSTEM -	1	-
2	537160203	HANDLE HALF *HARD GRIP, GREY*	1	-
2	537160209	HANDLE HALF *SOFT GRIP, GREY + BLACK TPE*	1	-

Ref.	Article N.	Description	Qty	Kit
3	537160301	HANDLE HALF *HARD GRIP, GREY*	1	-
3	537160302	HANDLE HALF *SOFT GRIP, GREY + BLACK TPE*	1	-
4	503221013	HEXAGON NUT -	1	-
5	537359602	WIRING ASSY -	1	-
6	537377801	THROTTLE CABLE ASSY -	1	-
7	503216618	SCREW IHSCT -	1	-
8	503878507	SHORT CIRCUIT CABLE -	1	-
9	537419001	SWITCH -	1	-
10	506497701	THROTTLE CONTROL -	1	-
11	537174201	SPRING -	1	-
12	537160701	THROTTLE LOCKOUT -	1	-
13	537174301	SPRING -	1	-
14	503216618	SCREW IHSCT -	2	-
15	503200735	SCREW IHSCFM -	1	-
16	502199503	HANDLEBAR -	1	-
17	537172801	HANDLE -	1	-
18	537172901	COVER -	1	-
19	731231401	HEXAGON NUT -	1	-
20	503200245	SCREW IHSCFM -	1	-
21	503750002	HANDLEBAR BRACKET -	1	-
22	502211201	STAPLE -	1	-
1	576277401	HANDLEBAR BRACKET	1	-

Ref.	Article N.	Description	Qty	Kit
		-		
2	731231401	HEXAGON NUT -	4	-
3	502197101	SQUARE NUT -	1	-
4	502286101	CLIP -	1	-
5	502203801	KNOB -	1	-
6	725238351	SCREW EHHM -	1	-
7	576220101	COVER -	1	-
8	576220001	LID -	1	-
9	503200778	SCREW IHSCFM -	4	-
1	536805601	CRANKSHAFT ASSY	1	-
2	503260202	SEALING RING	2	-
3	738210110	BALL BEARING	2	-
4	503255501	NEEDLE BEARING	1	-

FUEL TANK

E 135 R, 336 FR
FUEL TANK

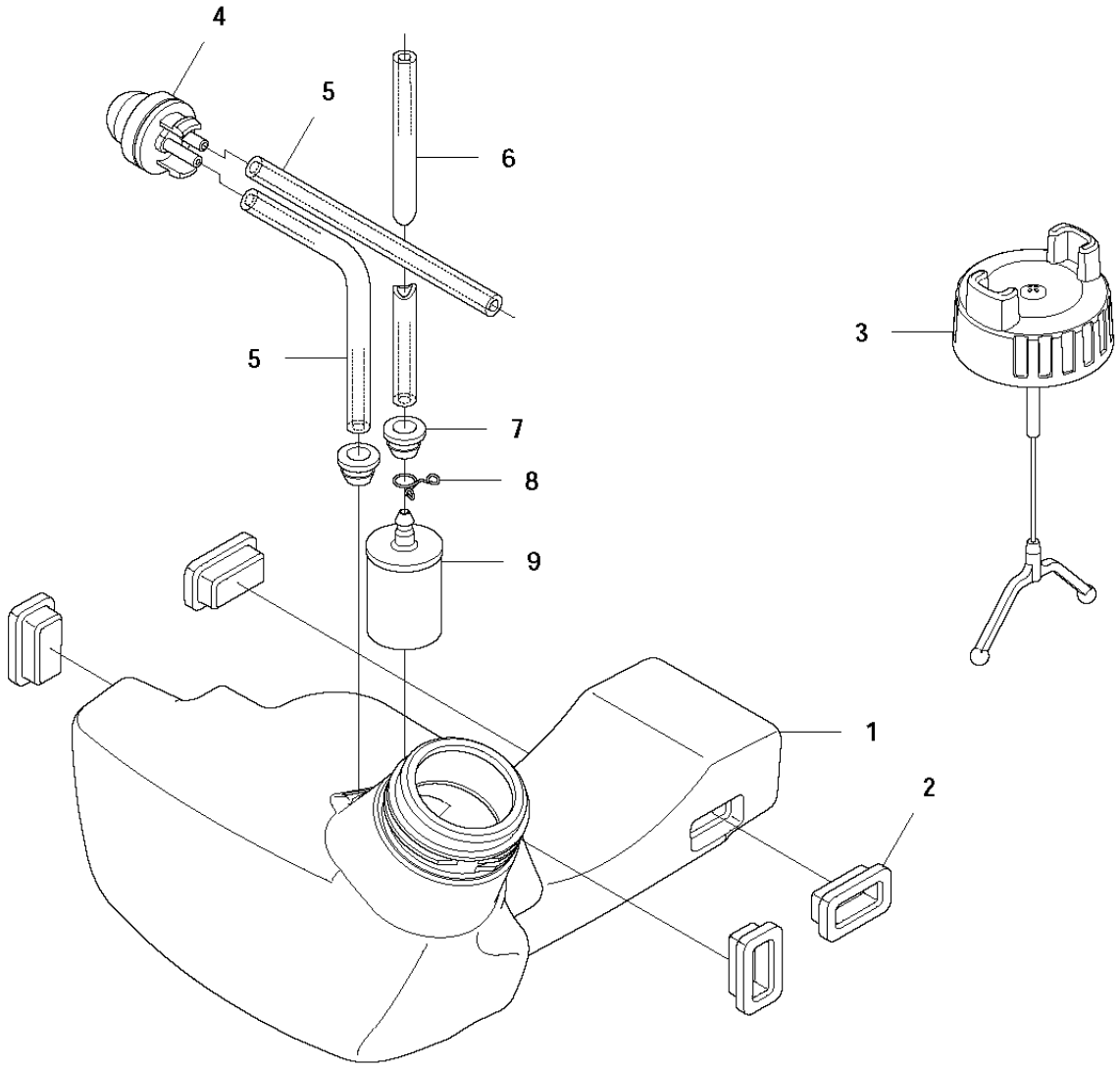

Ref.	Article N.	Description	Qty	Kit
1	501320402	SAW BLADE GUARD -	1	-
2	574530601	CLAMP *Spare part with Captive Screw*	1	-
3	573994304	SCREW IHSCFMO *Captive Screw*	2	-

Ref.	Article N.	Description	Qty	Kit
4	501320801	ADAPTER -	1	-
5	574532601	BLADE GUARD -	1	-
6	503200216	SCREW IHSCFM -	4	-
7	574039501	LOCK NUT -	4	-
8	537331603	SPLASH GUARD -	1	-
9	537396303	SPLASH GUARD -	1	-
10	503798802	BLADE -	1	-
11	503210716	SCREW IHSCT -	1	-
12	537387201	SNAP LOCKING -	4	-
13	537349403	TRIMMER GUARD ASSY -	1	-
14	503216825	SCREW IHSCFT -	1	-
15	503798802	BLADE -	1	-
16	544124501	RETAINER -	1	-
17	502448101	TRIMMER GUARD ASSY -	1	-
18	503216825	SCREW IHSCFT -	1	-
19	503798802	BLADE -	1	-
1	501192201	TOOL -	1	-
2	531009248	FILTER OIL -	1	-
3	503976501	GREASE -	1	-
4	502285901	STOP -	1	-
5	503801701	GREASE -	1	-
6	537362102	COMBINATION WRENCH	1	-

Ref.	Article N.	Description	Qty	Kit
		-		
7	544359101	TRANSPORT GUARD -	1	-
8	537312901	TRANSPORT GUARD -	1	-
9	503890102	SUPPORT CUP -	1	-
10	537216201	HARNESS -	1	-
10	537216202	HARNESS *USA*	1	-
1	544216401	GEAR -	1	-
2	537295902	GEAR HOUSING -	1	-
3	738219900	BALL BEARING -	1	-
4	505133301	SPARE PARTS KIT -	1	-
5	503252801	BALL BEARING -	1	-
6	735313110	CIRCLIP -	1	-
7	738210110	BALL BEARING -	1	-
8	738210112	BALL BEARING -	1	-
9	735311400	CIRCLIP -	1	-
10	735312810	CIRCLIP -	1	-
11	537147401	MAGNET -	1	-
12	503201501	SCREW -	1	-
13	574306801	CLAMP -	1	-
14	544087601	CLAMP -	1	-
15	537189501	SCREW -	1	-
16	732211601	LOCK NUT -	1	-

Ref.	Article N.	Description	Qty	Kit
17	503200210	SCREW IHSCFM -	1	-
18	574039501	LOCK NUT -	1	-
19	537351402	DRIVER -	1	-
20	537343501	SUPPORT FLANGE -	1	-
21	502291101	BLADE NUT -	1	-
22	503200325	SCREW IHSCFM -	2	-
1	537334301	INLET PIPE -	1	-
2	537371202	INSULATION WALL -	1	-
3	537371101	SLEEVE -	1	-
4	544019101	TUBULAR RIVET -	1	-
5	537373803	TUBULAR RIVET -	2	-
6	503200316	SCREW IHSCFM -	2	-
7	537341301	AIR DUCT -	1	-
8	575729001	CARBURETTOR *Zama C1Q-EL45*	1	-
9	503217550	SCREW IHSCFT -	2	-
10	503497101	GASKET -	1	-
11	537349001	LEVER -	1	-
12	544372701	SLEEVING BRACKET -	1	-
13	575841801	FILTER COVER -	1	-
14	537213209	KNOB -	1	-
15	575863702	FILTER HOLDER ASSY -	1	-
16	503212906	SCREW CCRPANT	2	-

Ref.	Article N.	Description	Qty	Kit
		-		
17	575841501	CHOKE CONTROL -	1	-
18	575841602	CHOKE LEVER -	1	-
19	544014601	LEVER -	1	-
20	544014701	BELLOWS -	1	-
21	544025801	BAR -	1	-
22	503231006	WASHER -	1	-
23	576215301	FILTER -	1	-
24	575863801	FRAME -	1	-
25	503200320	SCREW IHSCFM -	1	-
1	575729001	CARBURETTOR *Zama C1Q-EL45*	1	-
2	503479201	SCREW -	1	-
3	537417201	VALVE -	1	-
4	544372401	SPRING -	1	-
5	503480501	SCREW -	1	-
6	503974301	COVER -	1	-
7	504105601	DIAPHRAGM -	1	-
8	537020401	GASKET -	1	-
9	537387301	NOZZLE ASSY -	1	-
10	503480101	SCREW -	1	-
11	503480001	PIN RETAINING SCREW -	1	-
12	503665901	LEVER -	1	-

Ref.	Article N.	Description	Qty	Kit
13	503479701	VALVE -	1	-
14	537020301	SPRING -	1	-
15	501327101	SHAFT ASSY -	1	-
16	537370301	VALVE -	1	-
17	503481801	SCREW -	1	-
18	544372601	SPRING -	1	-
19	544372501	LEVER -	1	-
20	544427001	COLLAR -	1	-
21	504102701	SHAFT ASSY -	1	-
22	537012601	SPRING -	1	-
23	537012501	BALL -	1	-
24	503481301	STRAINER -	1	-
25	503479001	SCREW -	1	-
26	537416901	SCREW -	1	-
27	537417001	LIMITER CAP -	1	-
28	537387501	SCREW -	1	-
29	537385201	CLIP -	1	-
30	576270201	THROTTLE LEVER -	1	-
31	537020001	DIAPHRAGM PUMP -	1	-
32	537020101	GASKET -	1	-
33	537020201	COVER -	1	-
34	537020701	SCREW	1	-

Ref.	Article N.	Description	Qty	Kit
		-		
35	503481101	PIECE -	1	-
36	503479601	SCREW -	1	-
37	531004552	GASKET KIT *Set of gaskets*	1	-
1	574842901	CLUTCH COVER ASSY -	1	-
2	735312810	CIRCLIP -	1	-
3	738210104	BALL BEARING -	1	-
4	503240702	PARALLEL PIN -	2	-
5	537352901	CLUTCH DRUM -	1	-
6	735311400	CIRCLIP -	1	-
7	537340401	CLUTCH -	1	-
8	537427201	SPRING -	1	-
9	537046801	WASHER -	1	-
10	537415701	WASHER -	1	-
11	537418101	SCREW -	2	-
12	503217411	SCREW IHSCT -	1	-
13	537322701	ANTIVIBRATION ELEMENT -	1	-
14	537310101	COMPRESSION SLEEVE -	1	-
15	725533355	SCREW IHSCM -	1	-
16	575865801	COVER -	1	-
17	503200320	SCREW IHSCFM -	3	-
18	537418101	SCREW -	3	-

Ref.	Article N.	Description	Qty	Kit
1	585382201	CRANKCASE ASSY -	1	-
2	738210110	BALL BEARING -	2	-
3	503260202	SEALING RING -	2	-
4	593777601	GASKET -	1	-
5	503200230	SCREW IHSCFM -	4	-
6	593806001	GUIDE BUSHING -	2	-
7	537324201	INSERT -	1	-
1	575865002	CYLINDER COVER ASSY *Spare part with Captive Screw*	1	-
2	573994305	SCREW IHSCFMO *Captiv Screw*	1	-
3	575865701	PROTECTIVE PLATE *336 FR*	1	-
4	503200302	SCREW IHSCFM -	1	-
5	575864801	MUFFLER GUARD *Spare part with Captive Screw*	1	-
6	574477003	SCREW IHSCFMO *Captiv Screw*	2	-
7	576998614	LABEL *336 FR*	1	-
8	576998615	LABEL *135 R*	1	-
9	577231101	DAMPER *135 R*	1	-
1	574364301	CYLINDER ASSY	1	-
2	585998302	PISTON ASSY	1	-
3	503289054	PISTON RING	2	-
4	503289119	PISTON PIN	1	-
5	737441000	SNAP RING	2	-
6	503255501	NEEDLE BEARING	1	-
7	725533355	SCREW IHSCM	4	-
1	544328801	TANK ASSY -	1	-
2	503911001	SUSPENSION	4	-

Ref.	Article N.	Description	Qty	Kit
		-		
3	590324801	TANK CAP ASSY -	1	-
4	503936601	PURGE -	1	-
5	537042412	FUEL HOSE -	2	-
6	537052301	FUEL HOSE -	1	-
7	503735801	BUSHING -	2	-
8	537184901	O-RING -	1	-
9	503443201	FUEL FILTER -	1	-
1	537275702	HARNESS -	1	-
1	537275704	HARNESS *US*	1	-
2	537288301	BUCKLE -	1	-
3	537288401	BUCKLE -	1	-
4	537275901	HIP PAD -	1	-
5	502022801	HOOK -	1	-
6	502022902	HOOK -	1	-
7	502023002	LOCK -	1	-
8	586341001	SPRING -	1	-
9	735310920	E-CLIP -	1	-
10	503996101	BAND -	3	-
11	537113501	RETAINER -	1	-
12	503996103	BAND -	1	-
1	537249601	FLYWHEEL -	1	-

Ref.	Article N.	Description	Qty	Kit
2	731711651	HEXAGON NUT FLANGE -	1	-
3	544127001	IGNITION MODULE -	1	-
4	503202516	SCREW IHSCM -	2	-
5	503235109	SPARK PLUG -	1	-
6	537239301	CONTACT SPRING -	1	-
1	505408601	MUFFLER ASSY *CAT*	1	-
2	544116801	SPARK ARRESTER SCREEN -	1	-
3	724128759	SCREW CRPANM -	1	-
4	537333101	GASKET -	1	-
5	537340801	AIR CONDUCTOR -	1	-
6	503202963	SCREW IHSCFM -	2	-
7	503200320	SCREW IHSCFM -	1	-
1	501919701	TUBE ASSY -	1	-
2	537214101	TUBE -	1	-
3	537313901	GUIDE -	1	-
4	537360201	SPACER -	1	-
5	537360202	SPACER -	1	-
6	544183201	DRIVE SHAFT -	1	-
7	537130403	KNOB -	1	-
8	725233151	SCREW -	1	-
9	505161001	LOOP -	1	-
10	537350101	LOOP	1	-

Ref.	Article N.	Description	Qty	Kit
		-		
11	503217516	SCREW IHSCFT -	1	-
12	537376101	WIRING -	1	-
13	589295101	LABEL -	1	-
1	594729101	SHORT BLOCK ASSY *Assembled*	1	-
1	575840801	STARTER ASSY -	1	-
2	575840901	STARTER HOUSING *Spare part adapted for captive screw*	1	-
3	537325003	STARTER PULLEY -	1	-
4	503859901	RECOIL SPRING -	1	-
5	503218876	SCREW IHSCT -	1	-
6	503230080	WASHER -	1	-
7	537232501	STARTER HANDLE -	1	-
8	505305125	STARTER ROPE -	1	-
9	573994305	SCREW IHSCFMO *Captive screw*	3	-
10	577223601	DECAL -	1	-
11	503873305	STARTER PAWL -	1	-
12	503873502	STARTER PAWL -	2	-
13	503873601	SPRING -	2	-
14	735310820	E-CLIP -	2	-
1	537424507	HANDLE SYSTEM -	1	-
2	537160203	HANDLE HALF *HARD GRIP, GREY*	1	-
2	537160209	HANDLE HALF *SOFT GRIP, GREY + BLACK TPE*	1	-

Ref.	Article N.	Description	Qty	Kit
3	537160301	HANDLE HALF *HARD GRIP, GREY*	1	-
3	537160302	HANDLE HALF *SOFT GRIP, GREY + BLACK TPE*	1	-
4	503221013	HEXAGON NUT -	1	-
5	537359602	WIRING ASSY -	1	-
6	537377801	THROTTLE CABLE ASSY -	1	-
7	503216618	SCREW IHSCT -	1	-
8	503878507	SHORT CIRCUIT CABLE -	1	-
9	537419001	SWITCH -	1	-
10	506497701	THROTTLE CONTROL -	1	-
11	537174201	SPRING -	1	-
12	537160701	THROTTLE LOCKOUT -	1	-
13	537174301	SPRING -	1	-
14	503216618	SCREW IHSCT -	2	-
15	503200735	SCREW IHSCFM -	1	-
16	502199503	HANDLEBAR -	1	-
17	537172801	HANDLE -	1	-
18	537172901	COVER -	1	-
19	731231401	HEXAGON NUT -	1	-
20	503200245	SCREW IHSCFM -	1	-
21	503750002	HANDLEBAR BRACKET -	1	-
22	502211201	STAPLE -	1	-
1	576277401	HANDLEBAR BRACKET	1	-

Ref.	Article N.	Description	Qty	Kit
		-		
2	731231401	HEXAGON NUT -	4	-
3	502197101	SQUARE NUT -	1	-
4	502286101	CLIP -	1	-
5	502203801	KNOB -	1	-
6	725238351	SCREW EHHM -	1	-
7	576220101	COVER -	1	-
8	576220001	LID -	1	-
9	503200778	SCREW IHSCFM -	4	-
1	536805601	CRANKSHAFT ASSY	1	-
2	503260202	SEALING RING	2	-
3	738210110	BALL BEARING	2	-
4	503255501	NEEDLE BEARING	1	-

HARNESS

S DUO BALANCE 35 HARNESS

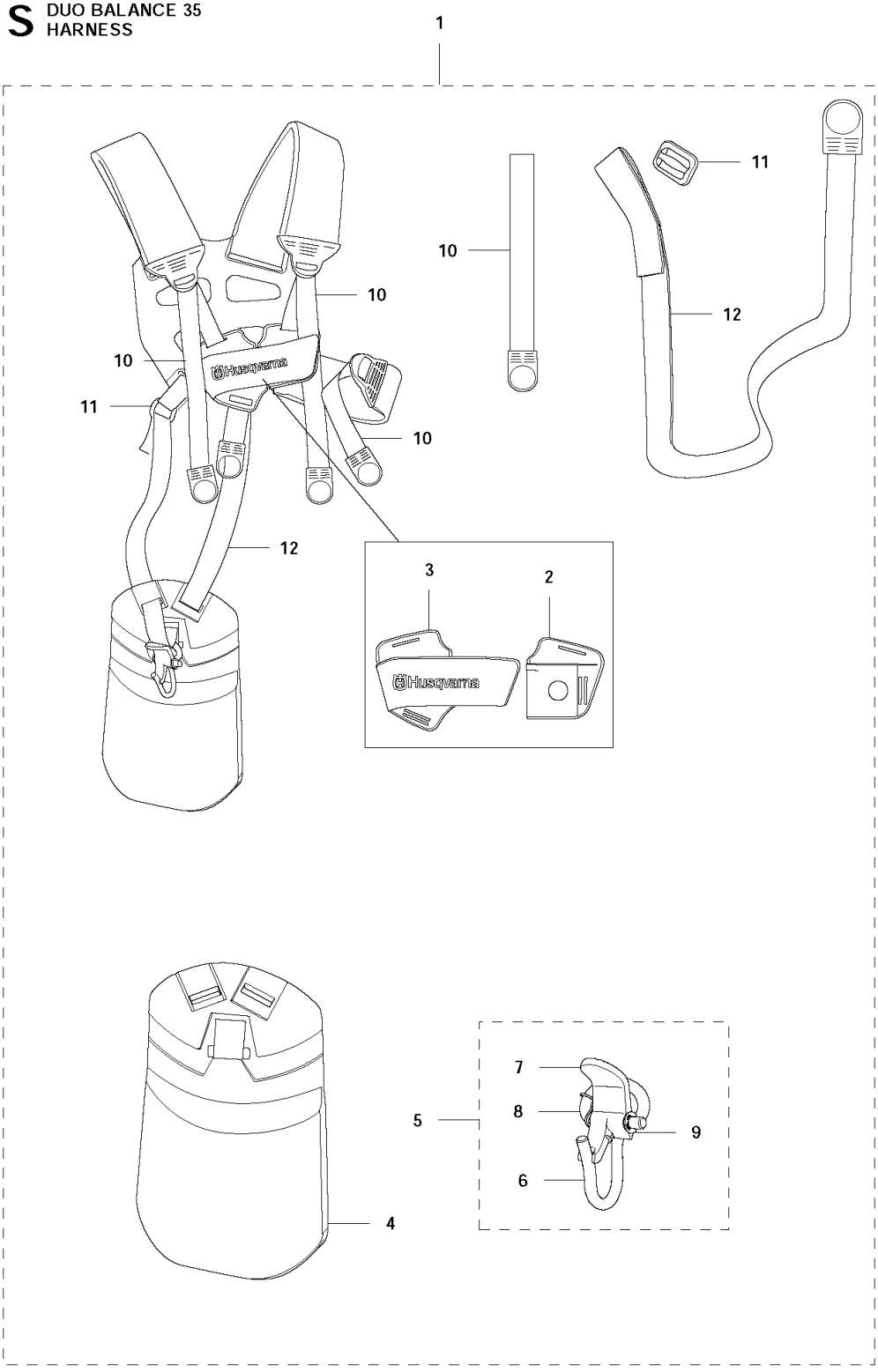

Ref.	Article N.	Description	Qty	Kit
1	501320402	SAW BLADE GUARD -	1	-
2	574530601	CLAMP *Spare part with Captive Screw*	1	-
3	573994304	SCREW IHSCFMO *Captive Screw*	2	-

Ref.	Article N.	Description	Qty	Kit
4	501320801	ADAPTER -	1	-
5	574532601	BLADE GUARD -	1	-
6	503200216	SCREW IHSCFM -	4	-
7	574039501	LOCK NUT -	4	-
8	537331603	SPLASH GUARD -	1	-
9	537396303	SPLASH GUARD -	1	-
10	503798802	BLADE -	1	-
11	503210716	SCREW IHSCT -	1	-
12	537387201	SNAP LOCKING -	4	-
13	537349403	TRIMMER GUARD ASSY -	1	-
14	503216825	SCREW IHSCFT -	1	-
15	503798802	BLADE -	1	-
16	544124501	RETAINER -	1	-
17	502448101	TRIMMER GUARD ASSY -	1	-
18	503216825	SCREW IHSCFT -	1	-
19	503798802	BLADE -	1	-
1	501192201	TOOL -	1	-
2	531009248	FILTER OIL -	1	-
3	503976501	GREASE -	1	-
4	502285901	STOP -	1	-
5	503801701	GREASE -	1	-
6	537362102	COMBINATION WRENCH	1	-

Ref.	Article N.	Description	Qty	Kit
		-		
7	544359101	TRANSPORT GUARD -	1	-
8	537312901	TRANSPORT GUARD -	1	-
9	503890102	SUPPORT CUP -	1	-
10	537216201	HARNESS -	1	-
10	537216202	HARNESS *USA*	1	-
1	544216401	GEAR -	1	-
2	537295902	GEAR HOUSING -	1	-
3	738219900	BALL BEARING -	1	-
4	505133301	SPARE PARTS KIT -	1	-
5	503252801	BALL BEARING -	1	-
6	735313110	CIRCLIP -	1	-
7	738210110	BALL BEARING -	1	-
8	738210112	BALL BEARING -	1	-
9	735311400	CIRCLIP -	1	-
10	735312810	CIRCLIP -	1	-
11	537147401	MAGNET -	1	-
12	503201501	SCREW -	1	-
13	574306801	CLAMP -	1	-
14	544087601	CLAMP -	1	-
15	537189501	SCREW -	1	-
16	732211601	LOCK NUT -	1	-

Ref.	Article N.	Description	Qty	Kit
17	503200210	SCREW IHSCFM -	1	-
18	574039501	LOCK NUT -	1	-
19	537351402	DRIVER -	1	-
20	537343501	SUPPORT FLANGE -	1	-
21	502291101	BLADE NUT -	1	-
22	503200325	SCREW IHSCFM -	2	-
1	537334301	INLET PIPE -	1	-
2	537371202	INSULATION WALL -	1	-
3	537371101	SLEEVE -	1	-
4	544019101	TUBULAR RIVET -	1	-
5	537373803	TUBULAR RIVET -	2	-
6	503200316	SCREW IHSCFM -	2	-
7	537341301	AIR DUCT -	1	-
8	575729001	CARBURETTOR *Zama C1Q-EL45*	1	-
9	503217550	SCREW IHSCFT -	2	-
10	503497101	GASKET -	1	-
11	537349001	LEVER -	1	-
12	544372701	SLEEVING BRACKET -	1	-
13	575841801	FILTER COVER -	1	-
14	537213209	KNOB -	1	-
15	575863702	FILTER HOLDER ASSY -	1	-
16	503212906	SCREW CCRPANT	2	-

Ref.	Article N.	Description	Qty	Kit
		-		
17	575841501	CHOKE CONTROL -	1	-
18	575841602	CHOKE LEVER -	1	-
19	544014601	LEVER -	1	-
20	544014701	BELLOWS -	1	-
21	544025801	BAR -	1	-
22	503231006	WASHER -	1	-
23	576215301	FILTER -	1	-
24	575863801	FRAME -	1	-
25	503200320	SCREW IHSCFM -	1	-
1	575729001	CARBURETTOR *Zama C1Q-EL45*	1	-
2	503479201	SCREW -	1	-
3	537417201	VALVE -	1	-
4	544372401	SPRING -	1	-
5	503480501	SCREW -	1	-
6	503974301	COVER -	1	-
7	504105601	DIAPHRAGM -	1	-
8	537020401	GASKET -	1	-
9	537387301	NOZZLE ASSY -	1	-
10	503480101	SCREW -	1	-
11	503480001	PIN RETAINING SCREW -	1	-
12	503665901	LEVER -	1	-

Ref.	Article N.	Description	Qty	Kit
13	503479701	VALVE -	1	-
14	537020301	SPRING -	1	-
15	501327101	SHAFT ASSY -	1	-
16	537370301	VALVE -	1	-
17	503481801	SCREW -	1	-
18	544372601	SPRING -	1	-
19	544372501	LEVER -	1	-
20	544427001	COLLAR -	1	-
21	504102701	SHAFT ASSY -	1	-
22	537012601	SPRING -	1	-
23	537012501	BALL -	1	-
24	503481301	STRAINER -	1	-
25	503479001	SCREW -	1	-
26	537416901	SCREW -	1	-
27	537417001	LIMITER CAP -	1	-
28	537387501	SCREW -	1	-
29	537385201	CLIP -	1	-
30	576270201	THROTTLE LEVER -	1	-
31	537020001	DIAPHRAGM PUMP -	1	-
32	537020101	GASKET -	1	-
33	537020201	COVER -	1	-
34	537020701	SCREW	1	-

Ref.	Article N.	Description	Qty	Kit
		-		
35	503481101	PIECE -	1	-
36	503479601	SCREW -	1	-
37	531004552	GASKET KIT *Set of gaskets*	1	-
1	574842901	CLUTCH COVER ASSY -	1	-
2	735312810	CIRCLIP -	1	-
3	738210104	BALL BEARING -	1	-
4	503240702	PARALLEL PIN -	2	-
5	537352901	CLUTCH DRUM -	1	-
6	735311400	CIRCLIP -	1	-
7	537340401	CLUTCH -	1	-
8	537427201	SPRING -	1	-
9	537046801	WASHER -	1	-
10	537415701	WASHER -	1	-
11	537418101	SCREW -	2	-
12	503217411	SCREW IHSCT -	1	-
13	537322701	ANTIVIBRATION ELEMENT -	1	-
14	537310101	COMPRESSION SLEEVE -	1	-
15	725533355	SCREW IHSCM -	1	-
16	575865801	COVER -	1	-
17	503200320	SCREW IHSCFM -	3	-
18	537418101	SCREW -	3	-

Ref.	Article N.	Description	Qty	Kit
1	585382201	CRANKCASE ASSY -	1	-
2	738210110	BALL BEARING -	2	-
3	503260202	SEALING RING -	2	-
4	593777601	GASKET -	1	-
5	503200230	SCREW IHSCFM -	4	-
6	593806001	GUIDE BUSHING -	2	-
7	537324201	INSERT -	1	-
1	575865002	CYLINDER COVER ASSY *Spare part with Captive Screw*	1	-
2	573994305	SCREW IHSCFMO *Captiv Screw*	1	-
3	575865701	PROTECTIVE PLATE *336 FR*	1	-
4	503200302	SCREW IHSCFM -	1	-
5	575864801	MUFFLER GUARD *Spare part with Captive Screw*	1	-
6	574477003	SCREW IHSCFMO *Captiv Screw*	2	-
7	576998614	LABEL *336 FR*	1	-
8	576998615	LABEL *135 R*	1	-
9	577231101	DAMPER *135 R*	1	-
1	574364301	CYLINDER ASSY	1	-
2	585998302	PISTON ASSY	1	-
3	503289054	PISTON RING	2	-
4	503289119	PISTON PIN	1	-
5	737441000	SNAP RING	2	-
6	503255501	NEEDLE BEARING	1	-
7	725533355	SCREW IHSCM	4	-
1	544328801	TANK ASSY -	1	-
2	503911001	SUSPENSION	4	-

Ref.	Article N.	Description	Qty	Kit
		-		
3	590324801	TANK CAP ASSY -	1	-
4	503936601	PURGE -	1	-
5	537042412	FUEL HOSE -	2	-
6	537052301	FUEL HOSE -	1	-
7	503735801	BUSHING -	2	-
8	537184901	O-RING -	1	-
9	503443201	FUEL FILTER -	1	-
1	537275702	HARNESS -	1	-
1	537275704	HARNESS *US*	1	-
2	537288301	BUCKLE -	1	-
3	537288401	BUCKLE -	1	-
4	537275901	HIP PAD -	1	-
5	502022801	HOOK -	1	-
6	502022902	HOOK -	1	-
7	502023002	LOCK -	1	-
8	586341001	SPRING -	1	-
9	735310920	E-CLIP -	1	-
10	503996101	BAND -	3	-
11	537113501	RETAINER -	1	-
12	503996103	BAND -	1	-
1	537249601	FLYWHEEL -	1	-

Ref.	Article N.	Description	Qty	Kit
2	731711651	HEXAGON NUT FLANGE -	1	-
3	544127001	IGNITION MODULE -	1	-
4	503202516	SCREW IHSCM -	2	-
5	503235109	SPARK PLUG -	1	-
6	537239301	CONTACT SPRING -	1	-
1	505408601	MUFFLER ASSY *CAT*	1	-
2	544116801	SPARK ARRESTER SCREEN -	1	-
3	724128759	SCREW CRPANM -	1	-
4	537333101	GASKET -	1	-
5	537340801	AIR CONDUCTOR -	1	-
6	503202963	SCREW IHSCFM -	2	-
7	503200320	SCREW IHSCFM -	1	-
1	501919701	TUBE ASSY -	1	-
2	537214101	TUBE -	1	-
3	537313901	GUIDE -	1	-
4	537360201	SPACER -	1	-
5	537360202	SPACER -	1	-
6	544183201	DRIVE SHAFT -	1	-
7	537130403	KNOB -	1	-
8	725233151	SCREW -	1	-
9	505161001	LOOP -	1	-
10	537350101	LOOP	1	-

Ref.	Article N.	Description	Qty	Kit
		-		
11	503217516	SCREW IHSCFT -	1	-
12	537376101	WIRING -	1	-
13	589295101	LABEL -	1	-
1	594729101	SHORT BLOCK ASSY *Assembled*	1	-
1	575840801	STARTER ASSY -	1	-
2	575840901	STARTER HOUSING *Spare part adapted for captive screw*	1	-
3	537325003	STARTER PULLEY -	1	-
4	503859901	RECOIL SPRING -	1	-
5	503218876	SCREW IHSCT -	1	-
6	503230080	WASHER -	1	-
7	537232501	STARTER HANDLE -	1	-
8	505305125	STARTER ROPE -	1	-
9	573994305	SCREW IHSCFMO *Captive screw*	3	-
10	577223601	DECAL -	1	-
11	503873305	STARTER PAWL -	1	-
12	503873502	STARTER PAWL -	2	-
13	503873601	SPRING -	2	-
14	735310820	E-CLIP -	2	-
1	537424507	HANDLE SYSTEM -	1	-
2	537160203	HANDLE HALF *HARD GRIP, GREY*	1	-
2	537160209	HANDLE HALF *SOFT GRIP, GREY + BLACK TPE*	1	-

Ref.	Article N.	Description	Qty	Kit
3	537160301	HANDLE HALF *HARD GRIP, GREY*	1	-
3	537160302	HANDLE HALF *SOFT GRIP, GREY + BLACK TPE*	1	-
4	503221013	HEXAGON NUT -	1	-
5	537359602	WIRING ASSY -	1	-
6	537377801	THROTTLE CABLE ASSY -	1	-
7	503216618	SCREW IHSCT -	1	-
8	503878507	SHORT CIRCUIT CABLE -	1	-
9	537419001	SWITCH -	1	-
10	506497701	THROTTLE CONTROL -	1	-
11	537174201	SPRING -	1	-
12	537160701	THROTTLE LOCKOUT -	1	-
13	537174301	SPRING -	1	-
14	503216618	SCREW IHSCT -	2	-
15	503200735	SCREW IHSCFM -	1	-
16	502199503	HANDLEBAR -	1	-
17	537172801	HANDLE -	1	-
18	537172901	COVER -	1	-
19	731231401	HEXAGON NUT -	1	-
20	503200245	SCREW IHSCFM -	1	-
21	503750002	HANDLEBAR BRACKET -	1	-
22	502211201	STAPLE -	1	-
1	576277401	HANDLEBAR BRACKET	1	-

Ref.	Article N.	Description	Qty	Kit
		-		
2	731231401	HEXAGON NUT -	4	-
3	502197101	SQUARE NUT -	1	-
4	502286101	CLIP -	1	-
5	502203801	KNOB -	1	-
6	725238351	SCREW EHHM -	1	-
7	576220101	COVER -	1	-
8	576220001	LID -	1	-
9	503200778	SCREW IHSCFM -	4	-
1	536805601	CRANKSHAFT ASSY	1	-
2	503260202	SEALING RING	2	-
3	738210110	BALL BEARING	2	-
4	503255501	NEEDLE BEARING	1	-

IGNITION SYSTEM

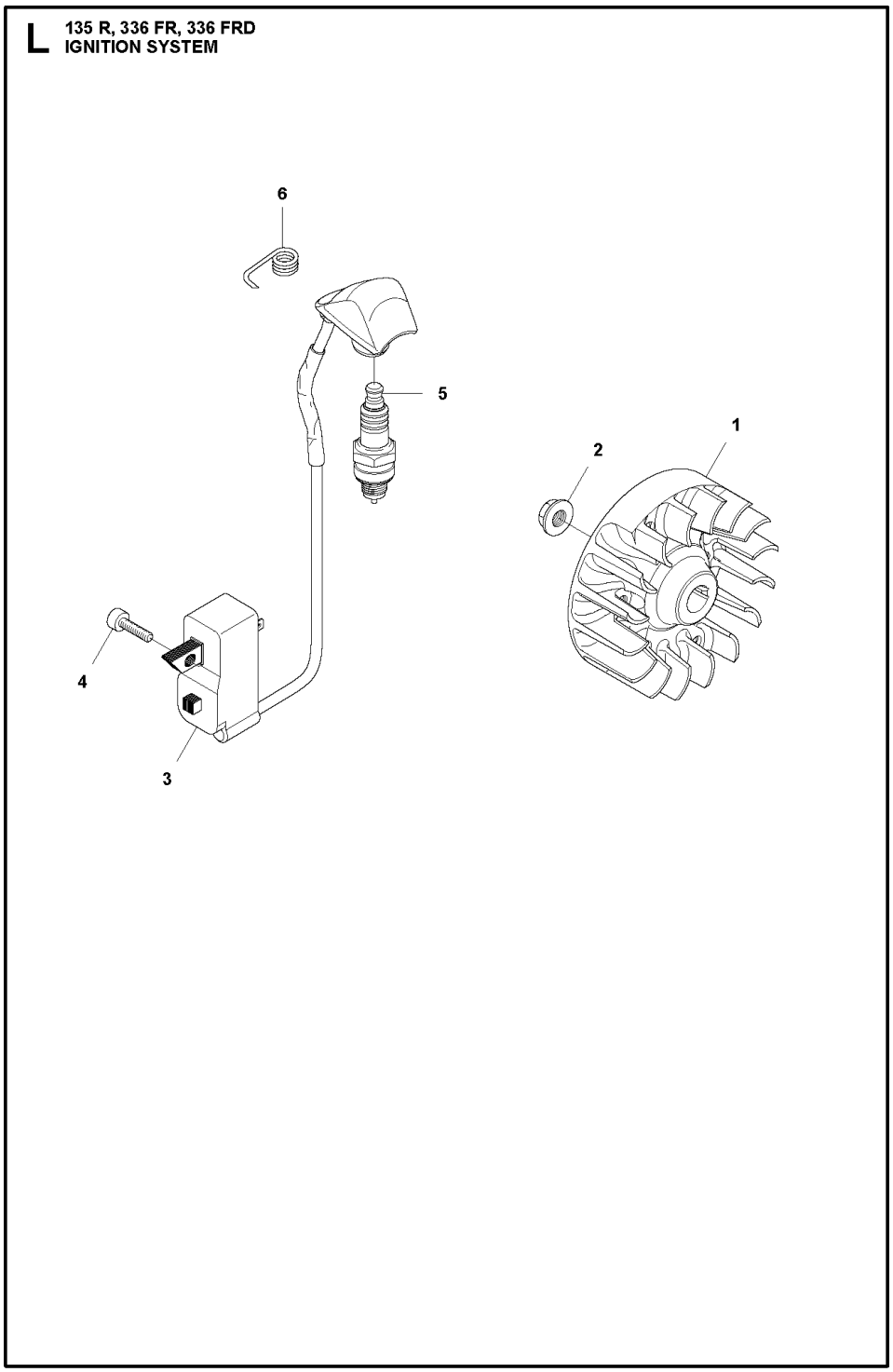

Ref.	Article N.	Description	Qty	Kit
1	501320402	SAW BLADE GUARD -	1	-
2	574530601	CLAMP *Spare part with Captive Screw*	1	-
3	573994304	SCREW IHSCFMO *Captive Screw*	2	-

Ref.	Article N.	Description	Qty	Kit
4	501320801	ADAPTER -	1	-
5	574532601	BLADE GUARD -	1	-
6	503200216	SCREW IHSCFM -	4	-
7	574039501	LOCK NUT -	4	-
8	537331603	SPLASH GUARD -	1	-
9	537396303	SPLASH GUARD -	1	-
10	503798802	BLADE -	1	-
11	503210716	SCREW IHSCT -	1	-
12	537387201	SNAP LOCKING -	4	-
13	537349403	TRIMMER GUARD ASSY -	1	-
14	503216825	SCREW IHSCFT -	1	-
15	503798802	BLADE -	1	-
16	544124501	RETAINER -	1	-
17	502448101	TRIMMER GUARD ASSY -	1	-
18	503216825	SCREW IHSCFT -	1	-
19	503798802	BLADE -	1	-
1	501192201	TOOL -	1	-
2	531009248	FILTER OIL -	1	-
3	503976501	GREASE -	1	-
4	502285901	STOP -	1	-
5	503801701	GREASE -	1	-
6	537362102	COMBINATION WRENCH	1	-

Ref.	Article N.	Description	Qty	Kit
		-		
7	544359101	TRANSPORT GUARD -	1	-
8	537312901	TRANSPORT GUARD -	1	-
9	503890102	SUPPORT CUP -	1	-
10	537216201	HARNESS -	1	-
10	537216202	HARNESS *USA*	1	-
1	544216401	GEAR -	1	-
2	537295902	GEAR HOUSING -	1	-
3	738219900	BALL BEARING -	1	-
4	505133301	SPARE PARTS KIT -	1	-
5	503252801	BALL BEARING -	1	-
6	735313110	CIRCLIP -	1	-
7	738210110	BALL BEARING -	1	-
8	738210112	BALL BEARING -	1	-
9	735311400	CIRCLIP -	1	-
10	735312810	CIRCLIP -	1	-
11	537147401	MAGNET -	1	-
12	503201501	SCREW -	1	-
13	574306801	CLAMP -	1	-
14	544087601	CLAMP -	1	-
15	537189501	SCREW -	1	-
16	732211601	LOCK NUT -	1	-

Ref.	Article N.	Description	Qty	Kit
17	503200210	SCREW IHSCFM -	1	-
18	574039501	LOCK NUT -	1	-
19	537351402	DRIVER -	1	-
20	537343501	SUPPORT FLANGE -	1	-
21	502291101	BLADE NUT -	1	-
22	503200325	SCREW IHSCFM -	2	-
1	537334301	INLET PIPE -	1	-
2	537371202	INSULATION WALL -	1	-
3	537371101	SLEEVE -	1	-
4	544019101	TUBULAR RIVET -	1	-
5	537373803	TUBULAR RIVET -	2	-
6	503200316	SCREW IHSCFM -	2	-
7	537341301	AIR DUCT -	1	-
8	575729001	CARBURETTOR *Zama C1Q-EL45*	1	-
9	503217550	SCREW IHSCFT -	2	-
10	503497101	GASKET -	1	-
11	537349001	LEVER -	1	-
12	544372701	SLEEVING BRACKET -	1	-
13	575841801	FILTER COVER -	1	-
14	537213209	KNOB -	1	-
15	575863702	FILTER HOLDER ASSY -	1	-
16	503212906	SCREW CCRPANT	2	-

Ref.	Article N.	Description	Qty	Kit
		-		
17	575841501	CHOKE CONTROL -	1	-
18	575841602	CHOKE LEVER -	1	-
19	544014601	LEVER -	1	-
20	544014701	BELLOWS -	1	-
21	544025801	BAR -	1	-
22	503231006	WASHER -	1	-
23	576215301	FILTER -	1	-
24	575863801	FRAME -	1	-
25	503200320	SCREW IHSCFM -	1	-
1	575729001	CARBURETTOR *Zama C1Q-EL45*	1	-
2	503479201	SCREW -	1	-
3	537417201	VALVE -	1	-
4	544372401	SPRING -	1	-
5	503480501	SCREW -	1	-
6	503974301	COVER -	1	-
7	504105601	DIAPHRAGM -	1	-
8	537020401	GASKET -	1	-
9	537387301	NOZZLE ASSY -	1	-
10	503480101	SCREW -	1	-
11	503480001	PIN RETAINING SCREW -	1	-
12	503665901	LEVER -	1	-

Ref.	Article N.	Description	Qty	Kit
13	503479701	VALVE -	1	-
14	537020301	SPRING -	1	-
15	501327101	SHAFT ASSY -	1	-
16	537370301	VALVE -	1	-
17	503481801	SCREW -	1	-
18	544372601	SPRING -	1	-
19	544372501	LEVER -	1	-
20	544427001	COLLAR -	1	-
21	504102701	SHAFT ASSY -	1	-
22	537012601	SPRING -	1	-
23	537012501	BALL -	1	-
24	503481301	STRAINER -	1	-
25	503479001	SCREW -	1	-
26	537416901	SCREW -	1	-
27	537417001	LIMITER CAP -	1	-
28	537387501	SCREW -	1	-
29	537385201	CLIP -	1	-
30	576270201	THROTTLE LEVER -	1	-
31	537020001	DIAPHRAGM PUMP -	1	-
32	537020101	GASKET -	1	-
33	537020201	COVER -	1	-
34	537020701	SCREW	1	-

Ref.	Article N.	Description	Qty	Kit
		-		
35	503481101	PIECE -	1	-
36	503479601	SCREW -	1	-
37	531004552	GASKET KIT *Set of gaskets*	1	-
1	574842901	CLUTCH COVER ASSY -	1	-
2	735312810	CIRCLIP -	1	-
3	738210104	BALL BEARING -	1	-
4	503240702	PARALLEL PIN -	2	-
5	537352901	CLUTCH DRUM -	1	-
6	735311400	CIRCLIP -	1	-
7	537340401	CLUTCH -	1	-
8	537427201	SPRING -	1	-
9	537046801	WASHER -	1	-
10	537415701	WASHER -	1	-
11	537418101	SCREW -	2	-
12	503217411	SCREW IHSCT -	1	-
13	537322701	ANTIVIBRATION ELEMENT -	1	-
14	537310101	COMPRESSION SLEEVE -	1	-
15	725533355	SCREW IHSCM -	1	-
16	575865801	COVER -	1	-
17	503200320	SCREW IHSCFM -	3	-
18	537418101	SCREW -	3	-

Ref.	Article N.	Description	Qty	Kit
1	585382201	CRANKCASE ASSY -	1	-
2	738210110	BALL BEARING -	2	-
3	503260202	SEALING RING -	2	-
4	593777601	GASKET -	1	-
5	503200230	SCREW IHSCFM -	4	-
6	593806001	GUIDE BUSHING -	2	-
7	537324201	INSERT -	1	-
1	575865002	CYLINDER COVER ASSY *Spare part with Captive Screw*	1	-
2	573994305	SCREW IHSCFMO *Captiv Screw*	1	-
3	575865701	PROTECTIVE PLATE *336 FR*	1	-
4	503200302	SCREW IHSCFM -	1	-
5	575864801	MUFFLER GUARD *Spare part with Captive Screw*	1	-
6	574477003	SCREW IHSCFMO *Captiv Screw*	2	-
7	576998614	LABEL *336 FR*	1	-
8	576998615	LABEL *135 R*	1	-
9	577231101	DAMPER *135 R*	1	-
1	574364301	CYLINDER ASSY	1	-
2	585998302	PISTON ASSY	1	-
3	503289054	PISTON RING	2	-
4	503289119	PISTON PIN	1	-
5	737441000	SNAP RING	2	-
6	503255501	NEEDLE BEARING	1	-
7	725533355	SCREW IHSCM	4	-
1	544328801	TANK ASSY -	1	-
2	503911001	SUSPENSION	4	-

Ref.	Article N.	Description	Qty	Kit
		-		
3	590324801	TANK CAP ASSY -	1	-
4	503936601	PURGE -	1	-
5	537042412	FUEL HOSE -	2	-
6	537052301	FUEL HOSE -	1	-
7	503735801	BUSHING -	2	-
8	537184901	O-RING -	1	-
9	503443201	FUEL FILTER -	1	-
1	537275702	HARNESS -	1	-
1	537275704	HARNESS *US*	1	-
2	537288301	BUCKLE -	1	-
3	537288401	BUCKLE -	1	-
4	537275901	HIP PAD -	1	-
5	502022801	HOOK -	1	-
6	502022902	HOOK -	1	-
7	502023002	LOCK -	1	-
8	586341001	SPRING -	1	-
9	735310920	E-CLIP -	1	-
10	503996101	BAND -	3	-
11	537113501	RETAINER -	1	-
12	503996103	BAND -	1	-
1	537249601	FLYWHEEL -	1	-

Ref.	Article N.	Description	Qty	Kit
2	731711651	HEXAGON NUT FLANGE -	1	-
3	544127001	IGNITION MODULE -	1	-
4	503202516	SCREW IHSCM -	2	-
5	503235109	SPARK PLUG -	1	-
6	537239301	CONTACT SPRING -	1	-
1	505408601	MUFFLER ASSY *CAT*	1	-
2	544116801	SPARK ARRESTER SCREEN -	1	-
3	724128759	SCREW CRPANM -	1	-
4	537333101	GASKET -	1	-
5	537340801	AIR CONDUCTOR -	1	-
6	503202963	SCREW IHSCFM -	2	-
7	503200320	SCREW IHSCFM -	1	-
1	501919701	TUBE ASSY -	1	-
2	537214101	TUBE -	1	-
3	537313901	GUIDE -	1	-
4	537360201	SPACER -	1	-
5	537360202	SPACER -	1	-
6	544183201	DRIVE SHAFT -	1	-
7	537130403	KNOB -	1	-
8	725233151	SCREW -	1	-
9	505161001	LOOP -	1	-
10	537350101	LOOP	1	-

Ref.	Article N.	Description	Qty	Kit
		-		
11	503217516	SCREW IHSCFT -	1	-
12	537376101	WIRING -	1	-
13	589295101	LABEL -	1	-
1	594729101	SHORT BLOCK ASSY *Assembled*	1	-
1	575840801	STARTER ASSY -	1	-
2	575840901	STARTER HOUSING *Spare part adapted for captive screw*	1	-
3	537325003	STARTER PULLEY -	1	-
4	503859901	RECOIL SPRING -	1	-
5	503218876	SCREW IHSCT -	1	-
6	503230080	WASHER -	1	-
7	537232501	STARTER HANDLE -	1	-
8	505305125	STARTER ROPE -	1	-
9	573994305	SCREW IHSCFMO *Captive screw*	3	-
10	577223601	DECAL -	1	-
11	503873305	STARTER PAWL -	1	-
12	503873502	STARTER PAWL -	2	-
13	503873601	SPRING -	2	-
14	735310820	E-CLIP -	2	-
1	537424507	HANDLE SYSTEM -	1	-
2	537160203	HANDLE HALF *HARD GRIP, GREY*	1	-
2	537160209	HANDLE HALF *SOFT GRIP, GREY + BLACK TPE*	1	-

Ref.	Article N.	Description	Qty	Kit
3	537160301	HANDLE HALF *HARD GRIP, GREY*	1	-
3	537160302	HANDLE HALF *SOFT GRIP, GREY + BLACK TPE*	1	-
4	503221013	HEXAGON NUT -	1	-
5	537359602	WIRING ASSY -	1	-
6	537377801	THROTTLE CABLE ASSY -	1	-
7	503216618	SCREW IHSCT -	1	-
8	503878507	SHORT CIRCUIT CABLE -	1	-
9	537419001	SWITCH -	1	-
10	506497701	THROTTLE CONTROL -	1	-
11	537174201	SPRING -	1	-
12	537160701	THROTTLE LOCKOUT -	1	-
13	537174301	SPRING -	1	-
14	503216618	SCREW IHSCT -	2	-
15	503200735	SCREW IHSCFM -	1	-
16	502199503	HANDLEBAR -	1	-
17	537172801	HANDLE -	1	-
18	537172901	COVER -	1	-
19	731231401	HEXAGON NUT -	1	-
20	503200245	SCREW IHSCFM -	1	-
21	503750002	HANDLEBAR BRACKET -	1	-
22	502211201	STAPLE -	1	-
1	576277401	HANDLEBAR BRACKET	1	-

Ref.	Article N.	Description	Qty	Kit
		-		
2	731231401	HEXAGON NUT -	4	-
3	502197101	SQUARE NUT -	1	-
4	502286101	CLIP -	1	-
5	502203801	KNOB -	1	-
6	725238351	SCREW EHHM -	1	-
7	576220101	COVER -	1	-
8	576220001	LID -	1	-
9	503200778	SCREW IHSCFM -	4	-
1	536805601	CRANKSHAFT ASSY	1	-
2	503260202	SEALING RING	2	-
3	738210110	BALL BEARING	2	-
4	503255501	NEEDLE BEARING	1	-

MUFFLER

H 135 R, 336 FR
MUFFLER

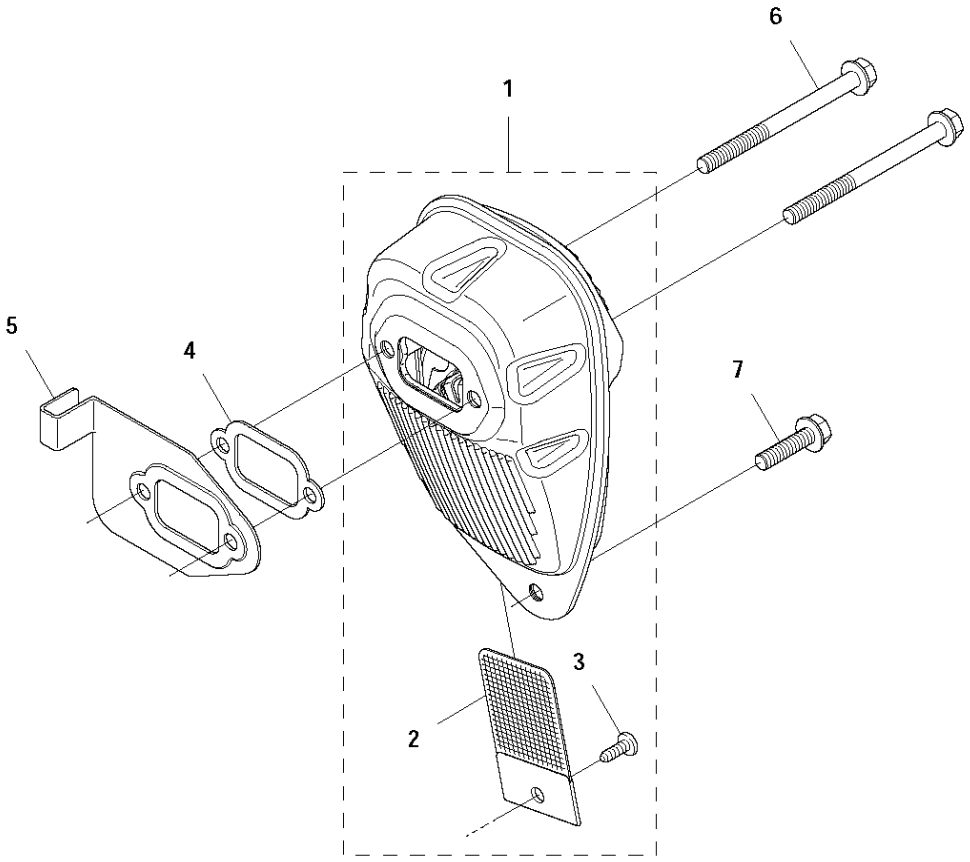

Ref.	Article N.	Description	Qty	Kit
1	501320402	SAW BLADE GUARD -	1	-
2	574530601	CLAMP *Spare part with Captive Screw*	1	-
3	573994304	SCREW IHSCFMO *Captive Screw*	2	-

Ref.	Article N.	Description	Qty	Kit
4	501320801	ADAPTER -	1	-
5	574532601	BLADE GUARD -	1	-
6	503200216	SCREW IHSCFM -	4	-
7	574039501	LOCK NUT -	4	-
8	537331603	SPLASH GUARD -	1	-
9	537396303	SPLASH GUARD -	1	-
10	503798802	BLADE -	1	-
11	503210716	SCREW IHSCT -	1	-
12	537387201	SNAP LOCKING -	4	-
13	537349403	TRIMMER GUARD ASSY -	1	-
14	503216825	SCREW IHSCFT -	1	-
15	503798802	BLADE -	1	-
16	544124501	RETAINER -	1	-
17	502448101	TRIMMER GUARD ASSY -	1	-
18	503216825	SCREW IHSCFT -	1	-
19	503798802	BLADE -	1	-
1	501192201	TOOL -	1	-
2	531009248	FILTER OIL -	1	-
3	503976501	GREASE -	1	-
4	502285901	STOP -	1	-
5	503801701	GREASE -	1	-
6	537362102	COMBINATION WRENCH	1	-

Ref.	Article N.	Description	Qty	Kit
		-		
7	544359101	TRANSPORT GUARD -	1	-
8	537312901	TRANSPORT GUARD -	1	-
9	503890102	SUPPORT CUP -	1	-
10	537216201	HARNESS -	1	-
10	537216202	HARNESS *USA*	1	-
1	544216401	GEAR -	1	-
2	537295902	GEAR HOUSING -	1	-
3	738219900	BALL BEARING -	1	-
4	505133301	SPARE PARTS KIT -	1	-
5	503252801	BALL BEARING -	1	-
6	735313110	CIRCLIP -	1	-
7	738210110	BALL BEARING -	1	-
8	738210112	BALL BEARING -	1	-
9	735311400	CIRCLIP -	1	-
10	735312810	CIRCLIP -	1	-
11	537147401	MAGNET -	1	-
12	503201501	SCREW -	1	-
13	574306801	CLAMP -	1	-
14	544087601	CLAMP -	1	-
15	537189501	SCREW -	1	-
16	732211601	LOCK NUT -	1	-

Ref.	Article N.	Description	Qty	Kit
17	503200210	SCREW IHSCFM -	1	-
18	574039501	LOCK NUT -	1	-
19	537351402	DRIVER -	1	-
20	537343501	SUPPORT FLANGE -	1	-
21	502291101	BLADE NUT -	1	-
22	503200325	SCREW IHSCFM -	2	-
1	537334301	INLET PIPE -	1	-
2	537371202	INSULATION WALL -	1	-
3	537371101	SLEEVE -	1	-
4	544019101	TUBULAR RIVET -	1	-
5	537373803	TUBULAR RIVET -	2	-
6	503200316	SCREW IHSCFM -	2	-
7	537341301	AIR DUCT -	1	-
8	575729001	CARBURETTOR *Zama C1Q-EL45*	1	-
9	503217550	SCREW IHSCFT -	2	-
10	503497101	GASKET -	1	-
11	537349001	LEVER -	1	-
12	544372701	SLEEVING BRACKET -	1	-
13	575841801	FILTER COVER -	1	-
14	537213209	KNOB -	1	-
15	575863702	FILTER HOLDER ASSY -	1	-
16	503212906	SCREW CCRPANT	2	-

Ref.	Article N.	Description	Qty	Kit
		-		
17	575841501	CHOKE CONTROL -	1	-
18	575841602	CHOKE LEVER -	1	-
19	544014601	LEVER -	1	-
20	544014701	BELLOWS -	1	-
21	544025801	BAR -	1	-
22	503231006	WASHER -	1	-
23	576215301	FILTER -	1	-
24	575863801	FRAME -	1	-
25	503200320	SCREW IHSCFM -	1	-
1	575729001	CARBURETTOR *Zama C1Q-EL45*	1	-
2	503479201	SCREW -	1	-
3	537417201	VALVE -	1	-
4	544372401	SPRING -	1	-
5	503480501	SCREW -	1	-
6	503974301	COVER -	1	-
7	504105601	DIAPHRAGM -	1	-
8	537020401	GASKET -	1	-
9	537387301	NOZZLE ASSY -	1	-
10	503480101	SCREW -	1	-
11	503480001	PIN RETAINING SCREW -	1	-
12	503665901	LEVER -	1	-

Ref.	Article N.	Description	Qty	Kit
13	503479701	VALVE -	1	-
14	537020301	SPRING -	1	-
15	501327101	SHAFT ASSY -	1	-
16	537370301	VALVE -	1	-
17	503481801	SCREW -	1	-
18	544372601	SPRING -	1	-
19	544372501	LEVER -	1	-
20	544427001	COLLAR -	1	-
21	504102701	SHAFT ASSY -	1	-
22	537012601	SPRING -	1	-
23	537012501	BALL -	1	-
24	503481301	STRAINER -	1	-
25	503479001	SCREW -	1	-
26	537416901	SCREW -	1	-
27	537417001	LIMITER CAP -	1	-
28	537387501	SCREW -	1	-
29	537385201	CLIP -	1	-
30	576270201	THROTTLE LEVER -	1	-
31	537020001	DIAPHRAGM PUMP -	1	-
32	537020101	GASKET -	1	-
33	537020201	COVER -	1	-
34	537020701	SCREW	1	-

Ref.	Article N.	Description	Qty	Kit
		-		
35	503481101	PIECE -	1	-
36	503479601	SCREW -	1	-
37	531004552	GASKET KIT *Set of gaskets*	1	-
1	574842901	CLUTCH COVER ASSY -	1	-
2	735312810	CIRCLIP -	1	-
3	738210104	BALL BEARING -	1	-
4	503240702	PARALLEL PIN -	2	-
5	537352901	CLUTCH DRUM -	1	-
6	735311400	CIRCLIP -	1	-
7	537340401	CLUTCH -	1	-
8	537427201	SPRING -	1	-
9	537046801	WASHER -	1	-
10	537415701	WASHER -	1	-
11	537418101	SCREW -	2	-
12	503217411	SCREW IHSCT -	1	-
13	537322701	ANTIVIBRATION ELEMENT -	1	-
14	537310101	COMPRESSION SLEEVE -	1	-
15	725533355	SCREW IHSCM -	1	-
16	575865801	COVER -	1	-
17	503200320	SCREW IHSCFM -	3	-
18	537418101	SCREW -	3	-

Ref.	Article N.	Description	Qty	Kit
1	585382201	CRANKCASE ASSY -	1	-
2	738210110	BALL BEARING -	2	-
3	503260202	SEALING RING -	2	-
4	593777601	GASKET -	1	-
5	503200230	SCREW IHSCFM -	4	-
6	593806001	GUIDE BUSHING -	2	-
7	537324201	INSERT -	1	-
1	575865002	CYLINDER COVER ASSY *Spare part with Captive Screw*	1	-
2	573994305	SCREW IHSCFMO *Captiv Screw*	1	-
3	575865701	PROTECTIVE PLATE *336 FR*	1	-
4	503200302	SCREW IHSCFM -	1	-
5	575864801	MUFFLER GUARD *Spare part with Captive Screw*	1	-
6	574477003	SCREW IHSCFMO *Captiv Screw*	2	-
7	576998614	LABEL *336 FR*	1	-
8	576998615	LABEL *135 R*	1	-
9	577231101	DAMPER *135 R*	1	-
1	574364301	CYLINDER ASSY	1	-
2	585998302	PISTON ASSY	1	-
3	503289054	PISTON RING	2	-
4	503289119	PISTON PIN	1	-
5	737441000	SNAP RING	2	-
6	503255501	NEEDLE BEARING	1	-
7	725533355	SCREW IHSCM	4	-
1	544328801	TANK ASSY -	1	-
2	503911001	SUSPENSION	4	-

Ref.	Article N.	Description	Qty	Kit
		-		
3	590324801	TANK CAP ASSY -	1	-
4	503936601	PURGE -	1	-
5	537042412	FUEL HOSE -	2	-
6	537052301	FUEL HOSE -	1	-
7	503735801	BUSHING -	2	-
8	537184901	O-RING -	1	-
9	503443201	FUEL FILTER -	1	-
1	537275702	HARNESS -	1	-
1	537275704	HARNESS *US*	1	-
2	537288301	BUCKLE -	1	-
3	537288401	BUCKLE -	1	-
4	537275901	HIP PAD -	1	-
5	502022801	HOOK -	1	-
6	502022902	HOOK -	1	-
7	502023002	LOCK -	1	-
8	586341001	SPRING -	1	-
9	735310920	E-CLIP -	1	-
10	503996101	BAND -	3	-
11	537113501	RETAINER -	1	-
12	503996103	BAND -	1	-
1	537249601	FLYWHEEL -	1	-

Ref.	Article N.	Description	Qty	Kit
2	731711651	HEXAGON NUT FLANGE -	1	-
3	544127001	IGNITION MODULE -	1	-
4	503202516	SCREW IHSCM -	2	-
5	503235109	SPARK PLUG -	1	-
6	537239301	CONTACT SPRING -	1	-
1	505408601	MUFFLER ASSY *CAT*	1	-
2	544116801	SPARK ARRESTER SCREEN -	1	-
3	724128759	SCREW CRPANM -	1	-
4	537333101	GASKET -	1	-
5	537340801	AIR CONDUCTOR -	1	-
6	503202963	SCREW IHSCFM -	2	-
7	503200320	SCREW IHSCFM -	1	-
1	501919701	TUBE ASSY -	1	-
2	537214101	TUBE -	1	-
3	537313901	GUIDE -	1	-
4	537360201	SPACER -	1	-
5	537360202	SPACER -	1	-
6	544183201	DRIVE SHAFT -	1	-
7	537130403	KNOB -	1	-
8	725233151	SCREW -	1	-
9	505161001	LOOP -	1	-
10	537350101	LOOP	1	-

Ref.	Article N.	Description	Qty	Kit
		-		
11	503217516	SCREW IHSCFT -	1	-
12	537376101	WIRING -	1	-
13	589295101	LABEL -	1	-
1	594729101	SHORT BLOCK ASSY *Assembled*	1	-
1	575840801	STARTER ASSY -	1	-
2	575840901	STARTER HOUSING *Spare part adapted for captive screw*	1	-
3	537325003	STARTER PULLEY -	1	-
4	503859901	RECOIL SPRING -	1	-
5	503218876	SCREW IHSCT -	1	-
6	503230080	WASHER -	1	-
7	537232501	STARTER HANDLE -	1	-
8	505305125	STARTER ROPE -	1	-
9	573994305	SCREW IHSCFMO *Captive screw*	3	-
10	577223601	DECAL -	1	-
11	503873305	STARTER PAWL -	1	-
12	503873502	STARTER PAWL -	2	-
13	503873601	SPRING -	2	-
14	735310820	E-CLIP -	2	-
1	537424507	HANDLE SYSTEM -	1	-
2	537160203	HANDLE HALF *HARD GRIP, GREY*	1	-
2	537160209	HANDLE HALF *SOFT GRIP, GREY + BLACK TPE*	1	-

Ref.	Article N.	Description	Qty	Kit
3	537160301	HANDLE HALF *HARD GRIP, GREY*	1	-
3	537160302	HANDLE HALF *SOFT GRIP, GREY + BLACK TPE*	1	-
4	503221013	HEXAGON NUT -	1	-
5	537359602	WIRING ASSY -	1	-
6	537377801	THROTTLE CABLE ASSY -	1	-
7	503216618	SCREW IHSCT -	1	-
8	503878507	SHORT CIRCUIT CABLE -	1	-
9	537419001	SWITCH -	1	-
10	506497701	THROTTLE CONTROL -	1	-
11	537174201	SPRING -	1	-
12	537160701	THROTTLE LOCKOUT -	1	-
13	537174301	SPRING -	1	-
14	503216618	SCREW IHSCT -	2	-
15	503200735	SCREW IHSCFM -	1	-
16	502199503	HANDLEBAR -	1	-
17	537172801	HANDLE -	1	-
18	537172901	COVER -	1	-
19	731231401	HEXAGON NUT -	1	-
20	503200245	SCREW IHSCFM -	1	-
21	503750002	HANDLEBAR BRACKET -	1	-
22	502211201	STAPLE -	1	-
1	576277401	HANDLEBAR BRACKET	1	-

Ref.	Article N.	Description	Qty	Kit
		-		
2	731231401	HEXAGON NUT -	4	-
3	502197101	SQUARE NUT -	1	-
4	502286101	CLIP -	1	-
5	502203801	KNOB -	1	-
6	725238351	SCREW EHHM -	1	-
7	576220101	COVER -	1	-
8	576220001	LID -	1	-
9	503200778	SCREW IHSCFM -	4	-
1	536805601	CRANKSHAFT ASSY	1	-
2	503260202	SEALING RING	2	-
3	738210110	BALL BEARING	2	-
4	503255501	NEEDLE BEARING	1	-

SHAFT

B2 135 R SHAFT

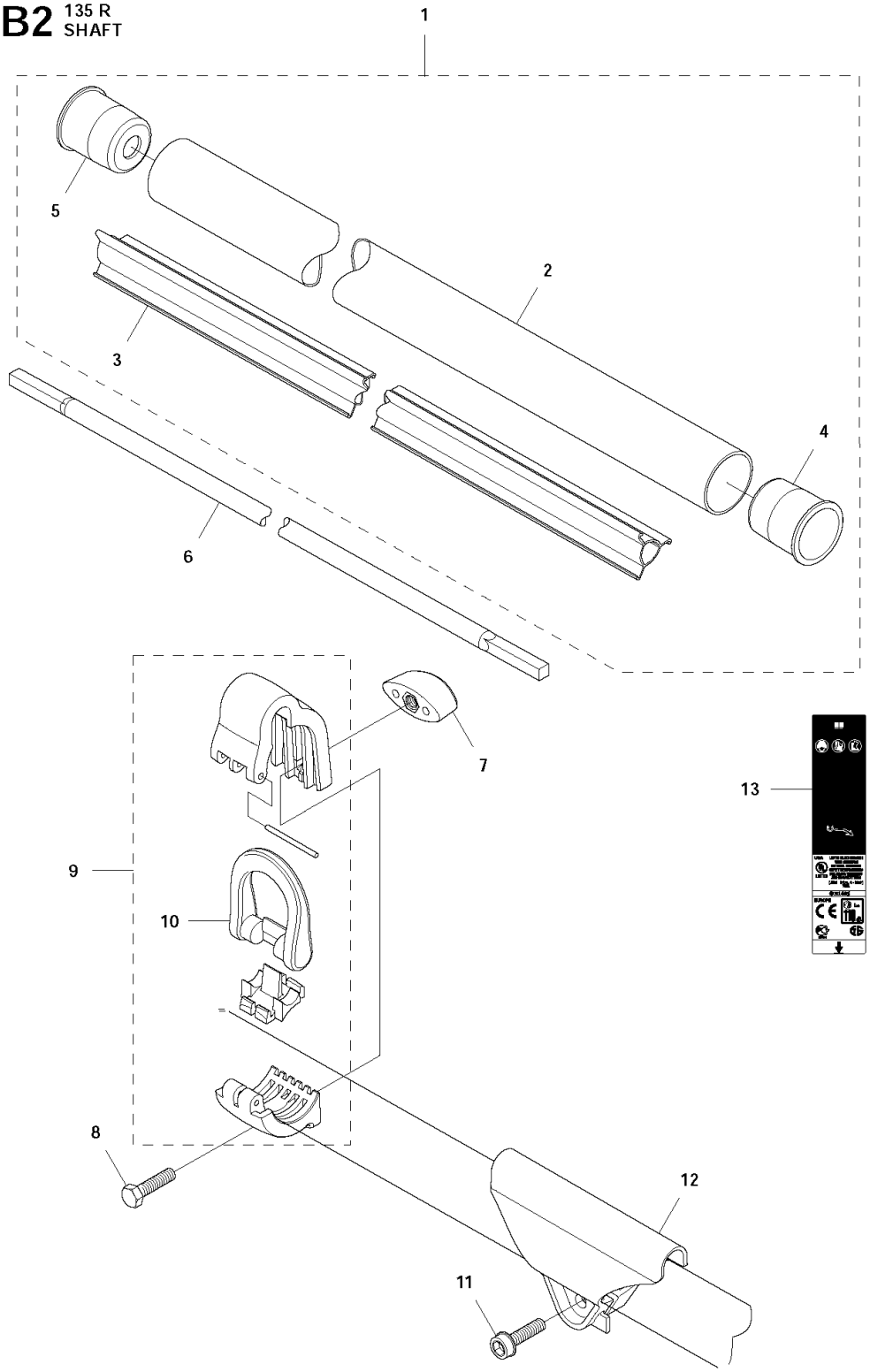

Ref.	Article N.	Description	Qty	Kit
1	501320402	SAW BLADE GUARD -	1	-
2	574530601	CLAMP *Spare part with Captive Screw*	1	-
3	573994304	SCREW IHSCFMO *Captive Screw*	2	-

Ref.	Article N.	Description	Qty	Kit
4	501320801	ADAPTER -	1	-
5	574532601	BLADE GUARD -	1	-
6	503200216	SCREW IHSCFM -	4	-
7	574039501	LOCK NUT -	4	-
8	537331603	SPLASH GUARD -	1	-
9	537396303	SPLASH GUARD -	1	-
10	503798802	BLADE -	1	-
11	503210716	SCREW IHSCT -	1	-
12	537387201	SNAP LOCKING -	4	-
13	537349403	TRIMMER GUARD ASSY -	1	-
14	503216825	SCREW IHSCFT -	1	-
15	503798802	BLADE -	1	-
16	544124501	RETAINER -	1	-
17	502448101	TRIMMER GUARD ASSY -	1	-
18	503216825	SCREW IHSCFT -	1	-
19	503798802	BLADE -	1	-
1	501192201	TOOL -	1	-
2	531009248	FILTER OIL -	1	-
3	503976501	GREASE -	1	-
4	502285901	STOP -	1	-
5	503801701	GREASE -	1	-
6	537362102	COMBINATION WRENCH	1	-

Ref.	Article N.	Description	Qty	Kit
		-		
7	544359101	TRANSPORT GUARD -	1	-
8	537312901	TRANSPORT GUARD -	1	-
9	503890102	SUPPORT CUP -	1	-
10	537216201	HARNESS -	1	-
10	537216202	HARNESS *USA*	1	-
1	544216401	GEAR -	1	-
2	537295902	GEAR HOUSING -	1	-
3	738219900	BALL BEARING -	1	-
4	505133301	SPARE PARTS KIT -	1	-
5	503252801	BALL BEARING -	1	-
6	735313110	CIRCLIP -	1	-
7	738210110	BALL BEARING -	1	-
8	738210112	BALL BEARING -	1	-
9	735311400	CIRCLIP -	1	-
10	735312810	CIRCLIP -	1	-
11	537147401	MAGNET -	1	-
12	503201501	SCREW -	1	-
13	574306801	CLAMP -	1	-
14	544087601	CLAMP -	1	-
15	537189501	SCREW -	1	-
16	732211601	LOCK NUT -	1	-

Ref.	Article N.	Description	Qty	Kit
17	503200210	SCREW IHSCFM -	1	-
18	574039501	LOCK NUT -	1	-
19	537351402	DRIVER -	1	-
20	537343501	SUPPORT FLANGE -	1	-
21	502291101	BLADE NUT -	1	-
22	503200325	SCREW IHSCFM -	2	-
1	537334301	INLET PIPE -	1	-
2	537371202	INSULATION WALL -	1	-
3	537371101	SLEEVE -	1	-
4	544019101	TUBULAR RIVET -	1	-
5	537373803	TUBULAR RIVET -	2	-
6	503200316	SCREW IHSCFM -	2	-
7	537341301	AIR DUCT -	1	-
8	575729001	CARBURETTOR *Zama C1Q-EL45*	1	-
9	503217550	SCREW IHSCFT -	2	-
10	503497101	GASKET -	1	-
11	537349001	LEVER -	1	-
12	544372701	SLEEVING BRACKET -	1	-
13	575841801	FILTER COVER -	1	-
14	537213209	KNOB -	1	-
15	575863702	FILTER HOLDER ASSY -	1	-
16	503212906	SCREW CCRPANT	2	-

Ref.	Article N.	Description	Qty	Kit
		-		
17	575841501	CHOKE CONTROL -	1	-
18	575841602	CHOKE LEVER -	1	-
19	544014601	LEVER -	1	-
20	544014701	BELLOWS -	1	-
21	544025801	BAR -	1	-
22	503231006	WASHER -	1	-
23	576215301	FILTER -	1	-
24	575863801	FRAME -	1	-
25	503200320	SCREW IHSCFM -	1	-
1	575729001	CARBURETTOR *Zama C1Q-EL45*	1	-
2	503479201	SCREW -	1	-
3	537417201	VALVE -	1	-
4	544372401	SPRING -	1	-
5	503480501	SCREW -	1	-
6	503974301	COVER -	1	-
7	504105601	DIAPHRAGM -	1	-
8	537020401	GASKET -	1	-
9	537387301	NOZZLE ASSY -	1	-
10	503480101	SCREW -	1	-
11	503480001	PIN RETAINING SCREW -	1	-
12	503665901	LEVER -	1	-

Ref.	Article N.	Description	Qty	Kit
13	503479701	VALVE -	1	-
14	537020301	SPRING -	1	-
15	501327101	SHAFT ASSY -	1	-
16	537370301	VALVE -	1	-
17	503481801	SCREW -	1	-
18	544372601	SPRING -	1	-
19	544372501	LEVER -	1	-
20	544427001	COLLAR -	1	-
21	504102701	SHAFT ASSY -	1	-
22	537012601	SPRING -	1	-
23	537012501	BALL -	1	-
24	503481301	STRAINER -	1	-
25	503479001	SCREW -	1	-
26	537416901	SCREW -	1	-
27	537417001	LIMITER CAP -	1	-
28	537387501	SCREW -	1	-
29	537385201	CLIP -	1	-
30	576270201	THROTTLE LEVER -	1	-
31	537020001	DIAPHRAGM PUMP -	1	-
32	537020101	GASKET -	1	-
33	537020201	COVER -	1	-
34	537020701	SCREW	1	-

Ref.	Article N.	Description	Qty	Kit
		-		
35	503481101	PIECE -	1	-
36	503479601	SCREW -	1	-
37	531004552	GASKET KIT *Set of gaskets*	1	-
1	574842901	CLUTCH COVER ASSY -	1	-
2	735312810	CIRCLIP -	1	-
3	738210104	BALL BEARING -	1	-
4	503240702	PARALLEL PIN -	2	-
5	537352901	CLUTCH DRUM -	1	-
6	735311400	CIRCLIP -	1	-
7	537340401	CLUTCH -	1	-
8	537427201	SPRING -	1	-
9	537046801	WASHER -	1	-
10	537415701	WASHER -	1	-
11	537418101	SCREW -	2	-
12	503217411	SCREW IHSCT -	1	-
13	537322701	ANTIVIBRATION ELEMENT -	1	-
14	537310101	COMPRESSION SLEEVE -	1	-
15	725533355	SCREW IHSCM -	1	-
16	575865801	COVER -	1	-
17	503200320	SCREW IHSCFM -	3	-
18	537418101	SCREW -	3	-

Ref.	Article N.	Description	Qty	Kit
1	585382201	CRANKCASE ASSY -	1	-
2	738210110	BALL BEARING -	2	-
3	503260202	SEALING RING -	2	-
4	593777601	GASKET -	1	-
5	503200230	SCREW IHSCFM -	4	-
6	593806001	GUIDE BUSHING -	2	-
7	537324201	INSERT -	1	-
1	575865002	CYLINDER COVER ASSY *Spare part with Captive Screw*	1	-
2	573994305	SCREW IHSCFMO *Captiv Screw*	1	-
3	575865701	PROTECTIVE PLATE *336 FR*	1	-
4	503200302	SCREW IHSCFM -	1	-
5	575864801	MUFFLER GUARD *Spare part with Captive Screw*	1	-
6	574477003	SCREW IHSCFMO *Captiv Screw*	2	-
7	576998614	LABEL *336 FR*	1	-
8	576998615	LABEL *135 R*	1	-
9	577231101	DAMPER *135 R*	1	-
1	574364301	CYLINDER ASSY	1	-
2	585998302	PISTON ASSY	1	-
3	503289054	PISTON RING	2	-
4	503289119	PISTON PIN	1	-
5	737441000	SNAP RING	2	-
6	503255501	NEEDLE BEARING	1	-
7	725533355	SCREW IHSCM	4	-
1	544328801	TANK ASSY -	1	-
2	503911001	SUSPENSION	4	-

Ref.	Article N.	Description	Qty	Kit
		-		
3	590324801	TANK CAP ASSY -	1	-
4	503936601	PURGE -	1	-
5	537042412	FUEL HOSE -	2	-
6	537052301	FUEL HOSE -	1	-
7	503735801	BUSHING -	2	-
8	537184901	O-RING -	1	-
9	503443201	FUEL FILTER -	1	-
1	537275702	HARNESS -	1	-
1	537275704	HARNESS *US*	1	-
2	537288301	BUCKLE -	1	-
3	537288401	BUCKLE -	1	-
4	537275901	HIP PAD -	1	-
5	502022801	HOOK -	1	-
6	502022902	HOOK -	1	-
7	502023002	LOCK -	1	-
8	586341001	SPRING -	1	-
9	735310920	E-CLIP -	1	-
10	503996101	BAND -	3	-
11	537113501	RETAINER -	1	-
12	503996103	BAND -	1	-
1	537249601	FLYWHEEL -	1	-

Ref.	Article N.	Description	Qty	Kit
2	731711651	HEXAGON NUT FLANGE -	1	-
3	544127001	IGNITION MODULE -	1	-
4	503202516	SCREW IHSCM -	2	-
5	503235109	SPARK PLUG -	1	-
6	537239301	CONTACT SPRING -	1	-
1	505408601	MUFFLER ASSY *CAT*	1	-
2	544116801	SPARK ARRESTER SCREEN -	1	-
3	724128759	SCREW CRPANM -	1	-
4	537333101	GASKET -	1	-
5	537340801	AIR CONDUCTOR -	1	-
6	503202963	SCREW IHSCFM -	2	-
7	503200320	SCREW IHSCFM -	1	-
1	501919701	TUBE ASSY -	1	-
2	537214101	TUBE -	1	-
3	537313901	GUIDE -	1	-
4	537360201	SPACER -	1	-
5	537360202	SPACER -	1	-
6	544183201	DRIVE SHAFT -	1	-
7	537130403	KNOB -	1	-
8	725233151	SCREW -	1	-
9	505161001	LOOP -	1	-
10	537350101	LOOP	1	-

Ref.	Article N.	Description	Qty	Kit
		-		
11	503217516	SCREW IHSCFT -	1	-
12	537376101	WIRING -	1	-
13	589295101	LABEL -	1	-
1	594729101	SHORT BLOCK ASSY *Assembled*	1	-
1	575840801	STARTER ASSY -	1	-
2	575840901	STARTER HOUSING *Spare part adapted for captive screw*	1	-
3	537325003	STARTER PULLEY -	1	-
4	503859901	RECOIL SPRING -	1	-
5	503218876	SCREW IHSCT -	1	-
6	503230080	WASHER -	1	-
7	537232501	STARTER HANDLE -	1	-
8	505305125	STARTER ROPE -	1	-
9	573994305	SCREW IHSCFMO *Captive screw*	3	-
10	577223601	DECAL -	1	-
11	503873305	STARTER PAWL -	1	-
12	503873502	STARTER PAWL -	2	-
13	503873601	SPRING -	2	-
14	735310820	E-CLIP -	2	-
1	537424507	HANDLE SYSTEM -	1	-
2	537160203	HANDLE HALF *HARD GRIP, GREY*	1	-
2	537160209	HANDLE HALF *SOFT GRIP, GREY + BLACK TPE*	1	-

Ref.	Article N.	Description	Qty	Kit
3	537160301	HANDLE HALF *HARD GRIP, GREY*	1	-
3	537160302	HANDLE HALF *SOFT GRIP, GREY + BLACK TPE*	1	-
4	503221013	HEXAGON NUT -	1	-
5	537359602	WIRING ASSY -	1	-
6	537377801	THROTTLE CABLE ASSY -	1	-
7	503216618	SCREW IHSCT -	1	-
8	503878507	SHORT CIRCUIT CABLE -	1	-
9	537419001	SWITCH -	1	-
10	506497701	THROTTLE CONTROL -	1	-
11	537174201	SPRING -	1	-
12	537160701	THROTTLE LOCKOUT -	1	-
13	537174301	SPRING -	1	-
14	503216618	SCREW IHSCT -	2	-
15	503200735	SCREW IHSCFM -	1	-
16	502199503	HANDLEBAR -	1	-
17	537172801	HANDLE -	1	-
18	537172901	COVER -	1	-
19	731231401	HEXAGON NUT -	1	-
20	503200245	SCREW IHSCFM -	1	-
21	503750002	HANDLEBAR BRACKET -	1	-
22	502211201	STAPLE -	1	-
1	576277401	HANDLEBAR BRACKET	1	-

Ref.	Article N.	Description	Qty	Kit
		-		
2	731231401	HEXAGON NUT -	4	-
3	502197101	SQUARE NUT -	1	-
4	502286101	CLIP -	1	-
5	502203801	KNOB -	1	-
6	725238351	SCREW EHHM -	1	-
7	576220101	COVER -	1	-
8	576220001	LID -	1	-
9	503200778	SCREW IHSCFM -	4	-
1	536805601	CRANKSHAFT ASSY	1	-
2	503260202	SEALING RING	2	-
3	738210110	BALL BEARING	2	-
4	503255501	NEEDLE BEARING	1	-

SHORT BLOCK

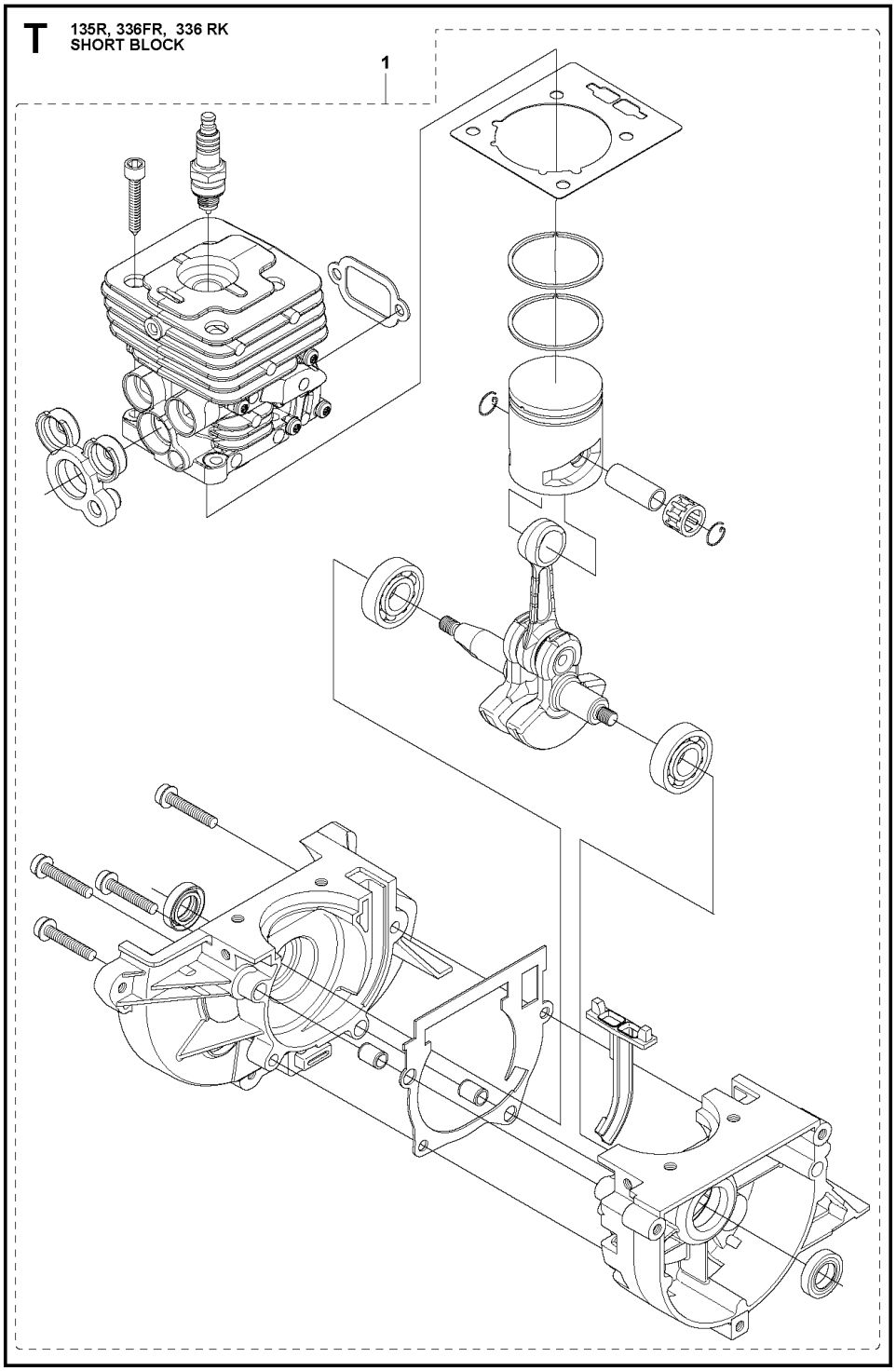

Ref.	Article N.	Description	Qty	Kit
1	501320402	SAW BLADE GUARD -	1	-
2	574530601	CLAMP *Spare part with Captive Screw*	1	-
3	573994304	SCREW IHSCFMO *Captive Screw*	2	-

Ref.	Article N.	Description	Qty	Kit
4	501320801	ADAPTER -	1	-
5	574532601	BLADE GUARD -	1	-
6	503200216	SCREW IHSCFM -	4	-
7	574039501	LOCK NUT -	4	-
8	537331603	SPLASH GUARD -	1	-
9	537396303	SPLASH GUARD -	1	-
10	503798802	BLADE -	1	-
11	503210716	SCREW IHSCT -	1	-
12	537387201	SNAP LOCKING -	4	-
13	537349403	TRIMMER GUARD ASSY -	1	-
14	503216825	SCREW IHSCFT -	1	-
15	503798802	BLADE -	1	-
16	544124501	RETAINER -	1	-
17	502448101	TRIMMER GUARD ASSY -	1	-
18	503216825	SCREW IHSCFT -	1	-
19	503798802	BLADE -	1	-
1	501192201	TOOL -	1	-
2	531009248	FILTER OIL -	1	-
3	503976501	GREASE -	1	-
4	502285901	STOP -	1	-
5	503801701	GREASE -	1	-
6	537362102	COMBINATION WRENCH	1	-

Ref.	Article N.	Description	Qty	Kit
		-		
7	544359101	TRANSPORT GUARD -	1	-
8	537312901	TRANSPORT GUARD -	1	-
9	503890102	SUPPORT CUP -	1	-
10	537216201	HARNESS -	1	-
10	537216202	HARNESS *USA*	1	-
1	544216401	GEAR -	1	-
2	537295902	GEAR HOUSING -	1	-
3	738219900	BALL BEARING -	1	-
4	505133301	SPARE PARTS KIT -	1	-
5	503252801	BALL BEARING -	1	-
6	735313110	CIRCLIP -	1	-
7	738210110	BALL BEARING -	1	-
8	738210112	BALL BEARING -	1	-
9	735311400	CIRCLIP -	1	-
10	735312810	CIRCLIP -	1	-
11	537147401	MAGNET -	1	-
12	503201501	SCREW -	1	-
13	574306801	CLAMP -	1	-
14	544087601	CLAMP -	1	-
15	537189501	SCREW -	1	-
16	732211601	LOCK NUT -	1	-

Ref.	Article N.	Description	Qty	Kit
17	503200210	SCREW IHSCFM -	1	-
18	574039501	LOCK NUT -	1	-
19	537351402	DRIVER -	1	-
20	537343501	SUPPORT FLANGE -	1	-
21	502291101	BLADE NUT -	1	-
22	503200325	SCREW IHSCFM -	2	-
1	537334301	INLET PIPE -	1	-
2	537371202	INSULATION WALL -	1	-
3	537371101	SLEEVE -	1	-
4	544019101	TUBULAR RIVET -	1	-
5	537373803	TUBULAR RIVET -	2	-
6	503200316	SCREW IHSCFM -	2	-
7	537341301	AIR DUCT -	1	-
8	575729001	CARBURETTOR *Zama C1Q-EL45*	1	-
9	503217550	SCREW IHSCFT -	2	-
10	503497101	GASKET -	1	-
11	537349001	LEVER -	1	-
12	544372701	SLEEVING BRACKET -	1	-
13	575841801	FILTER COVER -	1	-
14	537213209	KNOB -	1	-
15	575863702	FILTER HOLDER ASSY -	1	-
16	503212906	SCREW CCRPANT	2	-

Ref.	Article N.	Description	Qty	Kit
		-		
17	575841501	CHOKE CONTROL -	1	-
18	575841602	CHOKE LEVER -	1	-
19	544014601	LEVER -	1	-
20	544014701	BELLOWS -	1	-
21	544025801	BAR -	1	-
22	503231006	WASHER -	1	-
23	576215301	FILTER -	1	-
24	575863801	FRAME -	1	-
25	503200320	SCREW IHSCFM -	1	-
1	575729001	CARBURETTOR *Zama C1Q-EL45*	1	-
2	503479201	SCREW -	1	-
3	537417201	VALVE -	1	-
4	544372401	SPRING -	1	-
5	503480501	SCREW -	1	-
6	503974301	COVER -	1	-
7	504105601	DIAPHRAGM -	1	-
8	537020401	GASKET -	1	-
9	537387301	NOZZLE ASSY -	1	-
10	503480101	SCREW -	1	-
11	503480001	PIN RETAINING SCREW -	1	-
12	503665901	LEVER -	1	-

Ref.	Article N.	Description	Qty	Kit
13	503479701	VALVE -	1	-
14	537020301	SPRING -	1	-
15	501327101	SHAFT ASSY -	1	-
16	537370301	VALVE -	1	-
17	503481801	SCREW -	1	-
18	544372601	SPRING -	1	-
19	544372501	LEVER -	1	-
20	544427001	COLLAR -	1	-
21	504102701	SHAFT ASSY -	1	-
22	537012601	SPRING -	1	-
23	537012501	BALL -	1	-
24	503481301	STRAINER -	1	-
25	503479001	SCREW -	1	-
26	537416901	SCREW -	1	-
27	537417001	LIMITER CAP -	1	-
28	537387501	SCREW -	1	-
29	537385201	CLIP -	1	-
30	576270201	THROTTLE LEVER -	1	-
31	537020001	DIAPHRAGM PUMP -	1	-
32	537020101	GASKET -	1	-
33	537020201	COVER -	1	-
34	537020701	SCREW	1	-

Ref.	Article N.	Description	Qty	Kit
		-		
35	503481101	PIECE -	1	-
36	503479601	SCREW -	1	-
37	531004552	GASKET KIT *Set of gaskets*	1	-
1	574842901	CLUTCH COVER ASSY -	1	-
2	735312810	CIRCLIP -	1	-
3	738210104	BALL BEARING -	1	-
4	503240702	PARALLEL PIN -	2	-
5	537352901	CLUTCH DRUM -	1	-
6	735311400	CIRCLIP -	1	-
7	537340401	CLUTCH -	1	-
8	537427201	SPRING -	1	-
9	537046801	WASHER -	1	-
10	537415701	WASHER -	1	-
11	537418101	SCREW -	2	-
12	503217411	SCREW IHSCT -	1	-
13	537322701	ANTIVIBRATION ELEMENT -	1	-
14	537310101	COMPRESSION SLEEVE -	1	-
15	725533355	SCREW IHSCM -	1	-
16	575865801	COVER -	1	-
17	503200320	SCREW IHSCFM -	3	-
18	537418101	SCREW -	3	-

Ref.	Article N.	Description	Qty	Kit
1	585382201	CRANKCASE ASSY -	1	-
2	738210110	BALL BEARING -	2	-
3	503260202	SEALING RING -	2	-
4	593777601	GASKET -	1	-
5	503200230	SCREW IHSCFM -	4	-
6	593806001	GUIDE BUSHING -	2	-
7	537324201	INSERT -	1	-
1	575865002	CYLINDER COVER ASSY *Spare part with Captive Screw*	1	-
2	573994305	SCREW IHSCFMO *Captiv Screw*	1	-
3	575865701	PROTECTIVE PLATE *336 FR*	1	-
4	503200302	SCREW IHSCFM -	1	-
5	575864801	MUFFLER GUARD *Spare part with Captive Screw*	1	-
6	574477003	SCREW IHSCFMO *Captiv Screw*	2	-
7	576998614	LABEL *336 FR*	1	-
8	576998615	LABEL *135 R*	1	-
9	577231101	DAMPER *135 R*	1	-
1	574364301	CYLINDER ASSY	1	-
2	585998302	PISTON ASSY	1	-
3	503289054	PISTON RING	2	-
4	503289119	PISTON PIN	1	-
5	737441000	SNAP RING	2	-
6	503255501	NEEDLE BEARING	1	-
7	725533355	SCREW IHSCM	4	-
1	544328801	TANK ASSY -	1	-
2	503911001	SUSPENSION	4	-

Ref.	Article N.	Description	Qty	Kit
		-		
3	590324801	TANK CAP ASSY -	1	-
4	503936601	PURGE -	1	-
5	537042412	FUEL HOSE -	2	-
6	537052301	FUEL HOSE -	1	-
7	503735801	BUSHING -	2	-
8	537184901	O-RING -	1	-
9	503443201	FUEL FILTER -	1	-
1	537275702	HARNESS -	1	-
1	537275704	HARNESS *US*	1	-
2	537288301	BUCKLE -	1	-
3	537288401	BUCKLE -	1	-
4	537275901	HIP PAD -	1	-
5	502022801	HOOK -	1	-
6	502022902	HOOK -	1	-
7	502023002	LOCK -	1	-
8	586341001	SPRING -	1	-
9	735310920	E-CLIP -	1	-
10	503996101	BAND -	3	-
11	537113501	RETAINER -	1	-
12	503996103	BAND -	1	-
1	537249601	FLYWHEEL -	1	-

Ref.	Article N.	Description	Qty	Kit
2	731711651	HEXAGON NUT FLANGE -	1	-
3	544127001	IGNITION MODULE -	1	-
4	503202516	SCREW IHSCM -	2	-
5	503235109	SPARK PLUG -	1	-
6	537239301	CONTACT SPRING -	1	-
1	505408601	MUFFLER ASSY *CAT*	1	-
2	544116801	SPARK ARRESTER SCREEN -	1	-
3	724128759	SCREW CRPANM -	1	-
4	537333101	GASKET -	1	-
5	537340801	AIR CONDUCTOR -	1	-
6	503202963	SCREW IHSCFM -	2	-
7	503200320	SCREW IHSCFM -	1	-
1	501919701	TUBE ASSY -	1	-
2	537214101	TUBE -	1	-
3	537313901	GUIDE -	1	-
4	537360201	SPACER -	1	-
5	537360202	SPACER -	1	-
6	544183201	DRIVE SHAFT -	1	-
7	537130403	KNOB -	1	-
8	725233151	SCREW -	1	-
9	505161001	LOOP -	1	-
10	537350101	LOOP	1	-

Ref.	Article N.	Description	Qty	Kit
		-		
11	503217516	SCREW IHSCFT -	1	-
12	537376101	WIRING -	1	-
13	589295101	LABEL -	1	-
1	594729101	SHORT BLOCK ASSY *Assembled*	1	-
1	575840801	STARTER ASSY -	1	-
2	575840901	STARTER HOUSING *Spare part adapted for captive screw*	1	-
3	537325003	STARTER PULLEY -	1	-
4	503859901	RECOIL SPRING -	1	-
5	503218876	SCREW IHSCT -	1	-
6	503230080	WASHER -	1	-
7	537232501	STARTER HANDLE -	1	-
8	505305125	STARTER ROPE -	1	-
9	573994305	SCREW IHSCFMO *Captive screw*	3	-
10	577223601	DECAL -	1	-
11	503873305	STARTER PAWL -	1	-
12	503873502	STARTER PAWL -	2	-
13	503873601	SPRING -	2	-
14	735310820	E-CLIP -	2	-
1	537424507	HANDLE SYSTEM -	1	-
2	537160203	HANDLE HALF *HARD GRIP, GREY*	1	-
2	537160209	HANDLE HALF *SOFT GRIP, GREY + BLACK TPE*	1	-

Ref.	Article N.	Description	Qty	Kit
3	537160301	HANDLE HALF *HARD GRIP, GREY*	1	-
3	537160302	HANDLE HALF *SOFT GRIP, GREY + BLACK TPE*	1	-
4	503221013	HEXAGON NUT -	1	-
5	537359602	WIRING ASSY -	1	-
6	537377801	THROTTLE CABLE ASSY -	1	-
7	503216618	SCREW IHSCT -	1	-
8	503878507	SHORT CIRCUIT CABLE -	1	-
9	537419001	SWITCH -	1	-
10	506497701	THROTTLE CONTROL -	1	-
11	537174201	SPRING -	1	-
12	537160701	THROTTLE LOCKOUT -	1	-
13	537174301	SPRING -	1	-
14	503216618	SCREW IHSCT -	2	-
15	503200735	SCREW IHSCFM -	1	-
16	502199503	HANDLEBAR -	1	-
17	537172801	HANDLE -	1	-
18	537172901	COVER -	1	-
19	731231401	HEXAGON NUT -	1	-
20	503200245	SCREW IHSCFM -	1	-
21	503750002	HANDLEBAR BRACKET -	1	-
22	502211201	STAPLE -	1	-
1	576277401	HANDLEBAR BRACKET	1	-

Ref.	Article N.	Description	Qty	Kit
		-		
2	731231401	HEXAGON NUT -	4	-
3	502197101	SQUARE NUT -	1	-
4	502286101	CLIP -	1	-
5	502203801	KNOB -	1	-
6	725238351	SCREW EHHM -	1	-
7	576220101	COVER -	1	-
8	576220001	LID -	1	-
9	503200778	SCREW IHSCFM -	4	-
1	536805601	CRANKSHAFT ASSY	1	-
2	503260202	SEALING RING	2	-
3	738210110	BALL BEARING	2	-
4	503255501	NEEDLE BEARING	1	-

STARTER

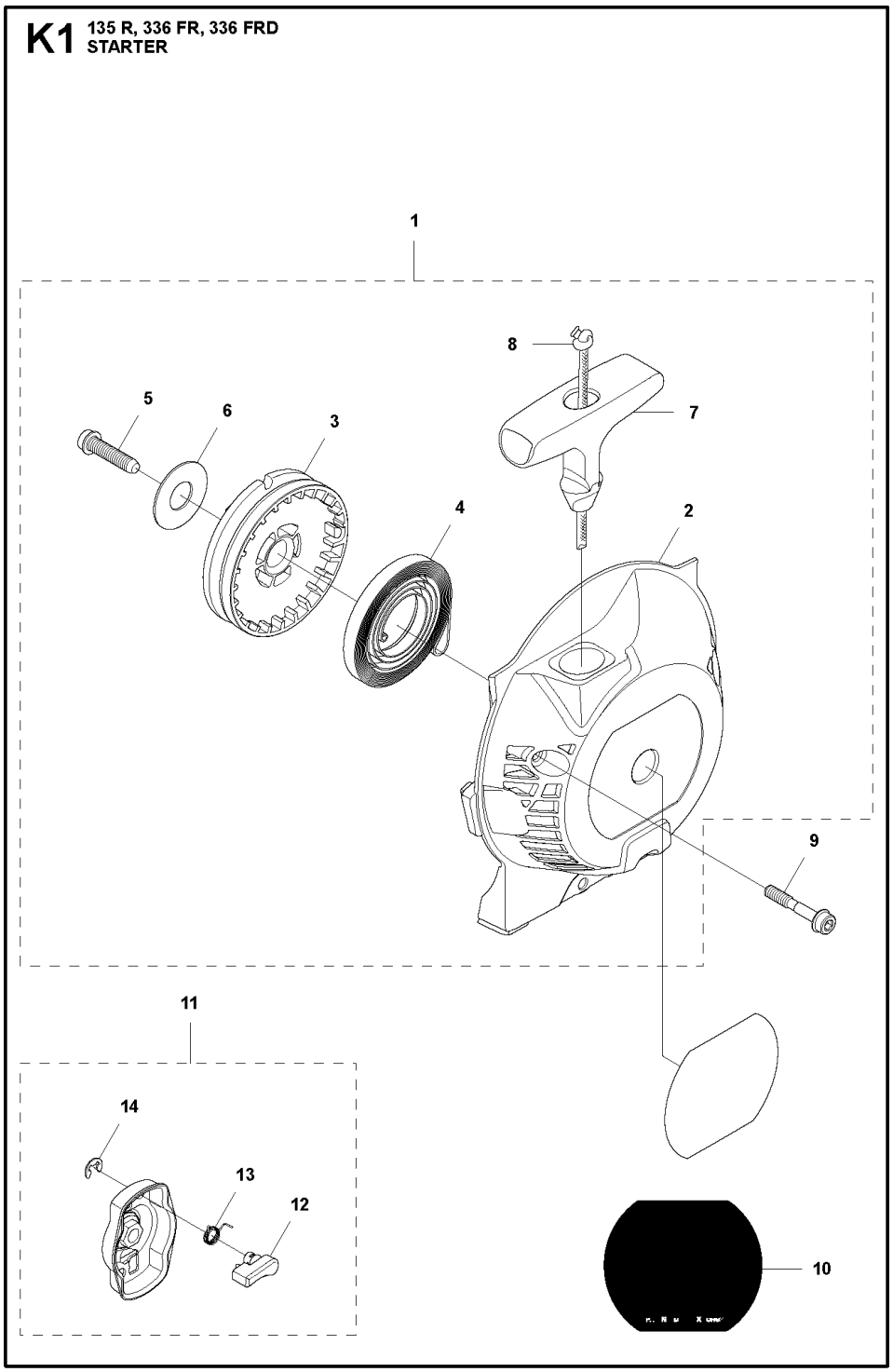

Ref.	Article N.	Description	Qty	Kit
1	501320402	SAW BLADE GUARD -	1	-
2	574530601	CLAMP *Spare part with Captive Screw*	1	-
3	573994304	SCREW IHSCFMO *Captive Screw*	2	-

Ref.	Article N.	Description	Qty	Kit
4	501320801	ADAPTER -	1	-
5	574532601	BLADE GUARD -	1	-
6	503200216	SCREW IHSCFM -	4	-
7	574039501	LOCK NUT -	4	-
8	537331603	SPLASH GUARD -	1	-
9	537396303	SPLASH GUARD -	1	-
10	503798802	BLADE -	1	-
11	503210716	SCREW IHSCT -	1	-
12	537387201	SNAP LOCKING -	4	-
13	537349403	TRIMMER GUARD ASSY -	1	-
14	503216825	SCREW IHSCFT -	1	-
15	503798802	BLADE -	1	-
16	544124501	RETAINER -	1	-
17	502448101	TRIMMER GUARD ASSY -	1	-
18	503216825	SCREW IHSCFT -	1	-
19	503798802	BLADE -	1	-
1	501192201	TOOL -	1	-
2	531009248	FILTER OIL -	1	-
3	503976501	GREASE -	1	-
4	502285901	STOP -	1	-
5	503801701	GREASE -	1	-
6	537362102	COMBINATION WRENCH	1	-

Ref.	Article N.	Description	Qty	Kit
		-		
7	544359101	TRANSPORT GUARD -	1	-
8	537312901	TRANSPORT GUARD -	1	-
9	503890102	SUPPORT CUP -	1	-
10	537216201	HARNESS -	1	-
10	537216202	HARNESS *USA*	1	-
1	544216401	GEAR -	1	-
2	537295902	GEAR HOUSING -	1	-
3	738219900	BALL BEARING -	1	-
4	505133301	SPARE PARTS KIT -	1	-
5	503252801	BALL BEARING -	1	-
6	735313110	CIRCLIP -	1	-
7	738210110	BALL BEARING -	1	-
8	738210112	BALL BEARING -	1	-
9	735311400	CIRCLIP -	1	-
10	735312810	CIRCLIP -	1	-
11	537147401	MAGNET -	1	-
12	503201501	SCREW -	1	-
13	574306801	CLAMP -	1	-
14	544087601	CLAMP -	1	-
15	537189501	SCREW -	1	-
16	732211601	LOCK NUT -	1	-

Ref.	Article N.	Description	Qty	Kit
17	503200210	SCREW IHSCFM -	1	-
18	574039501	LOCK NUT -	1	-
19	537351402	DRIVER -	1	-
20	537343501	SUPPORT FLANGE -	1	-
21	502291101	BLADE NUT -	1	-
22	503200325	SCREW IHSCFM -	2	-
1	537334301	INLET PIPE -	1	-
2	537371202	INSULATION WALL -	1	-
3	537371101	SLEEVE -	1	-
4	544019101	TUBULAR RIVET -	1	-
5	537373803	TUBULAR RIVET -	2	-
6	503200316	SCREW IHSCFM -	2	-
7	537341301	AIR DUCT -	1	-
8	575729001	CARBURETTOR *Zama C1Q-EL45*	1	-
9	503217550	SCREW IHSCFT -	2	-
10	503497101	GASKET -	1	-
11	537349001	LEVER -	1	-
12	544372701	SLEEVING BRACKET -	1	-
13	575841801	FILTER COVER -	1	-
14	537213209	KNOB -	1	-
15	575863702	FILTER HOLDER ASSY -	1	-
16	503212906	SCREW CCRPANT	2	-

Ref.	Article N.	Description	Qty	Kit
		-		
17	575841501	CHOKE CONTROL -	1	-
18	575841602	CHOKE LEVER -	1	-
19	544014601	LEVER -	1	-
20	544014701	BELLOWS -	1	-
21	544025801	BAR -	1	-
22	503231006	WASHER -	1	-
23	576215301	FILTER -	1	-
24	575863801	FRAME -	1	-
25	503200320	SCREW IHSCFM -	1	-
1	575729001	CARBURETTOR *Zama C1Q-EL45*	1	-
2	503479201	SCREW -	1	-
3	537417201	VALVE -	1	-
4	544372401	SPRING -	1	-
5	503480501	SCREW -	1	-
6	503974301	COVER -	1	-
7	504105601	DIAPHRAGM -	1	-
8	537020401	GASKET -	1	-
9	537387301	NOZZLE ASSY -	1	-
10	503480101	SCREW -	1	-
11	503480001	PIN RETAINING SCREW -	1	-
12	503665901	LEVER -	1	-

Ref.	Article N.	Description	Qty	Kit
13	503479701	VALVE -	1	-
14	537020301	SPRING -	1	-
15	501327101	SHAFT ASSY -	1	-
16	537370301	VALVE -	1	-
17	503481801	SCREW -	1	-
18	544372601	SPRING -	1	-
19	544372501	LEVER -	1	-
20	544427001	COLLAR -	1	-
21	504102701	SHAFT ASSY -	1	-
22	537012601	SPRING -	1	-
23	537012501	BALL -	1	-
24	503481301	STRAINER -	1	-
25	503479001	SCREW -	1	-
26	537416901	SCREW -	1	-
27	537417001	LIMITER CAP -	1	-
28	537387501	SCREW -	1	-
29	537385201	CLIP -	1	-
30	576270201	THROTTLE LEVER -	1	-
31	537020001	DIAPHRAGM PUMP -	1	-
32	537020101	GASKET -	1	-
33	537020201	COVER -	1	-
34	537020701	SCREW	1	-

Ref.	Article N.	Description	Qty	Kit
		-		
35	503481101	PIECE -	1	-
36	503479601	SCREW -	1	-
37	531004552	GASKET KIT *Set of gaskets*	1	-
1	574842901	CLUTCH COVER ASSY -	1	-
2	735312810	CIRCLIP -	1	-
3	738210104	BALL BEARING -	1	-
4	503240702	PARALLEL PIN -	2	-
5	537352901	CLUTCH DRUM -	1	-
6	735311400	CIRCLIP -	1	-
7	537340401	CLUTCH -	1	-
8	537427201	SPRING -	1	-
9	537046801	WASHER -	1	-
10	537415701	WASHER -	1	-
11	537418101	SCREW -	2	-
12	503217411	SCREW IHSCT -	1	-
13	537322701	ANTIVIBRATION ELEMENT -	1	-
14	537310101	COMPRESSION SLEEVE -	1	-
15	725533355	SCREW IHSCM -	1	-
16	575865801	COVER -	1	-
17	503200320	SCREW IHSCFM -	3	-
18	537418101	SCREW -	3	-

Ref.	Article N.	Description	Qty	Kit
1	585382201	CRANKCASE ASSY -	1	-
2	738210110	BALL BEARING -	2	-
3	503260202	SEALING RING -	2	-
4	593777601	GASKET -	1	-
5	503200230	SCREW IHSCFM -	4	-
6	593806001	GUIDE BUSHING -	2	-
7	537324201	INSERT -	1	-
1	575865002	CYLINDER COVER ASSY *Spare part with Captive Screw*	1	-
2	573994305	SCREW IHSCFMO *Captiv Screw*	1	-
3	575865701	PROTECTIVE PLATE *336 FR*	1	-
4	503200302	SCREW IHSCFM -	1	-
5	575864801	MUFFLER GUARD *Spare part with Captive Screw*	1	-
6	574477003	SCREW IHSCFMO *Captiv Screw*	2	-
7	576998614	LABEL *336 FR*	1	-
8	576998615	LABEL *135 R*	1	-
9	577231101	DAMPER *135 R*	1	-
1	574364301	CYLINDER ASSY	1	-
2	585998302	PISTON ASSY	1	-
3	503289054	PISTON RING	2	-
4	503289119	PISTON PIN	1	-
5	737441000	SNAP RING	2	-
6	503255501	NEEDLE BEARING	1	-
7	725533355	SCREW IHSCM	4	-
1	544328801	TANK ASSY -	1	-
2	503911001	SUSPENSION	4	-

Ref.	Article N.	Description	Qty	Kit
		-		
3	590324801	TANK CAP ASSY -	1	-
4	503936601	PURGE -	1	-
5	537042412	FUEL HOSE -	2	-
6	537052301	FUEL HOSE -	1	-
7	503735801	BUSHING -	2	-
8	537184901	O-RING -	1	-
9	503443201	FUEL FILTER -	1	-
1	537275702	HARNESS -	1	-
1	537275704	HARNESS *US*	1	-
2	537288301	BUCKLE -	1	-
3	537288401	BUCKLE -	1	-
4	537275901	HIP PAD -	1	-
5	502022801	HOOK -	1	-
6	502022902	HOOK -	1	-
7	502023002	LOCK -	1	-
8	586341001	SPRING -	1	-
9	735310920	E-CLIP -	1	-
10	503996101	BAND -	3	-
11	537113501	RETAINER -	1	-
12	503996103	BAND -	1	-
1	537249601	FLYWHEEL -	1	-

Ref.	Article N.	Description	Qty	Kit
2	731711651	HEXAGON NUT FLANGE -	1	-
3	544127001	IGNITION MODULE -	1	-
4	503202516	SCREW IHSCM -	2	-
5	503235109	SPARK PLUG -	1	-
6	537239301	CONTACT SPRING -	1	-
1	505408601	MUFFLER ASSY *CAT*	1	-
2	544116801	SPARK ARRESTER SCREEN -	1	-
3	724128759	SCREW CRPANM -	1	-
4	537333101	GASKET -	1	-
5	537340801	AIR CONDUCTOR -	1	-
6	503202963	SCREW IHSCFM -	2	-
7	503200320	SCREW IHSCFM -	1	-
1	501919701	TUBE ASSY -	1	-
2	537214101	TUBE -	1	-
3	537313901	GUIDE -	1	-
4	537360201	SPACER -	1	-
5	537360202	SPACER -	1	-
6	544183201	DRIVE SHAFT -	1	-
7	537130403	KNOB -	1	-
8	725233151	SCREW -	1	-
9	505161001	LOOP -	1	-
10	537350101	LOOP	1	-

Ref.	Article N.	Description	Qty	Kit
		-		
11	503217516	SCREW IHSCFT -	1	-
12	537376101	WIRING -	1	-
13	589295101	LABEL -	1	-
1	594729101	SHORT BLOCK ASSY *Assembled*	1	-
1	575840801	STARTER ASSY -	1	-
2	575840901	STARTER HOUSING *Spare part adapted for captive screw*	1	-
3	537325003	STARTER PULLEY -	1	-
4	503859901	RECOIL SPRING -	1	-
5	503218876	SCREW IHSCT -	1	-
6	503230080	WASHER -	1	-
7	537232501	STARTER HANDLE -	1	-
8	505305125	STARTER ROPE -	1	-
9	573994305	SCREW IHSCFMO *Captive screw*	3	-
10	577223601	DECAL -	1	-
11	503873305	STARTER PAWL -	1	-
12	503873502	STARTER PAWL -	2	-
13	503873601	SPRING -	2	-
14	735310820	E-CLIP -	2	-
1	537424507	HANDLE SYSTEM -	1	-
2	537160203	HANDLE HALF *HARD GRIP, GREY*	1	-
2	537160209	HANDLE HALF *SOFT GRIP, GREY + BLACK TPE*	1	-

Ref.	Article N.	Description	Qty	Kit
3	537160301	HANDLE HALF *HARD GRIP, GREY*	1	-
3	537160302	HANDLE HALF *SOFT GRIP, GREY + BLACK TPE*	1	-
4	503221013	HEXAGON NUT -	1	-
5	537359602	WIRING ASSY -	1	-
6	537377801	THROTTLE CABLE ASSY -	1	-
7	503216618	SCREW IHSCT -	1	-
8	503878507	SHORT CIRCUIT CABLE -	1	-
9	537419001	SWITCH -	1	-
10	506497701	THROTTLE CONTROL -	1	-
11	537174201	SPRING -	1	-
12	537160701	THROTTLE LOCKOUT -	1	-
13	537174301	SPRING -	1	-
14	503216618	SCREW IHSCT -	2	-
15	503200735	SCREW IHSCFM -	1	-
16	502199503	HANDLEBAR -	1	-
17	537172801	HANDLE -	1	-
18	537172901	COVER -	1	-
19	731231401	HEXAGON NUT -	1	-
20	503200245	SCREW IHSCFM -	1	-
21	503750002	HANDLEBAR BRACKET -	1	-
22	502211201	STAPLE -	1	-
1	576277401	HANDLEBAR BRACKET	1	-

Ref.	Article N.	Description	Qty	Kit
		-		
2	731231401	HEXAGON NUT -	4	-
3	502197101	SQUARE NUT -	1	-
4	502286101	CLIP -	1	-
5	502203801	KNOB -	1	-
6	725238351	SCREW EHHM -	1	-
7	576220101	COVER -	1	-
8	576220001	LID -	1	-
9	503200778	SCREW IHSCFM -	4	-
1	536805601	CRANKSHAFT ASSY	1	-
2	503260202	SEALING RING	2	-
3	738210110	BALL BEARING	2	-
4	503255501	NEEDLE BEARING	1	-

THROTTLE CONTROLS

D 135 R, 336 FR
THROTTLE CONTROLS

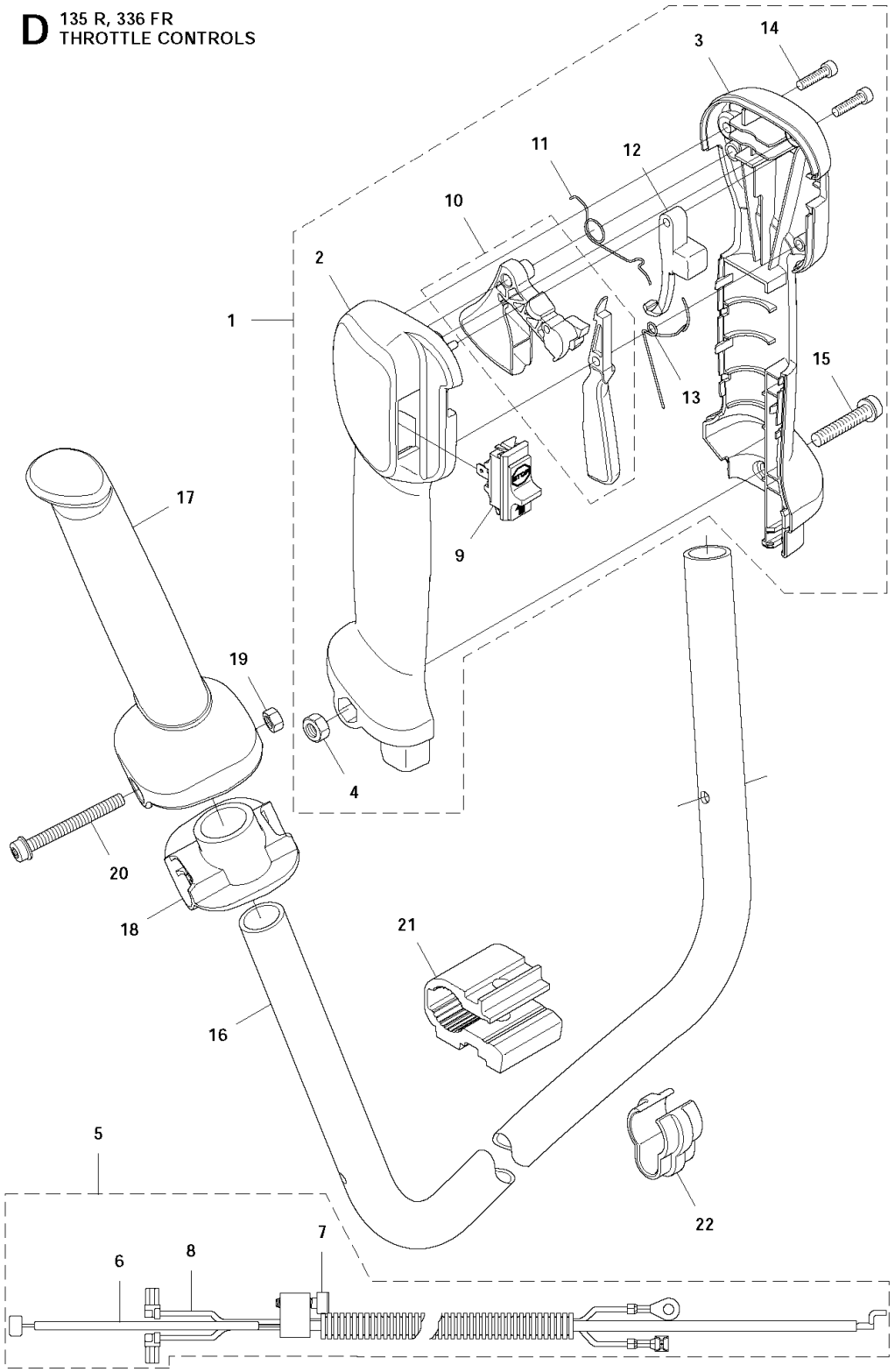

Ref.	Article N.	Description	Qty	Kit
1	501320402	SAW BLADE GUARD -	1	-
2	574530601	CLAMP *Spare part with Captive Screw*	1	-
3	573994304	SCREW IHSCFMO *Captive Screw*	2	-

Ref.	Article N.	Description	Qty	Kit
4	501320801	ADAPTER -	1	-
5	574532601	BLADE GUARD -	1	-
6	503200216	SCREW IHSCFM -	4	-
7	574039501	LOCK NUT -	4	-
8	537331603	SPLASH GUARD -	1	-
9	537396303	SPLASH GUARD -	1	-
10	503798802	BLADE -	1	-
11	503210716	SCREW IHSCT -	1	-
12	537387201	SNAP LOCKING -	4	-
13	537349403	TRIMMER GUARD ASSY -	1	-
14	503216825	SCREW IHSCFT -	1	-
15	503798802	BLADE -	1	-
16	544124501	RETAINER -	1	-
17	502448101	TRIMMER GUARD ASSY -	1	-
18	503216825	SCREW IHSCFT -	1	-
19	503798802	BLADE -	1	-
1	501192201	TOOL -	1	-
2	531009248	FILTER OIL -	1	-
3	503976501	GREASE -	1	-
4	502285901	STOP -	1	-
5	503801701	GREASE -	1	-
6	537362102	COMBINATION WRENCH	1	-

Ref.	Article N.	Description	Qty	Kit
		-		
7	544359101	TRANSPORT GUARD -	1	-
8	537312901	TRANSPORT GUARD -	1	-
9	503890102	SUPPORT CUP -	1	-
10	537216201	HARNESS -	1	-
10	537216202	HARNESS *USA*	1	-
1	544216401	GEAR -	1	-
2	537295902	GEAR HOUSING -	1	-
3	738219900	BALL BEARING -	1	-
4	505133301	SPARE PARTS KIT -	1	-
5	503252801	BALL BEARING -	1	-
6	735313110	CIRCLIP -	1	-
7	738210110	BALL BEARING -	1	-
8	738210112	BALL BEARING -	1	-
9	735311400	CIRCLIP -	1	-
10	735312810	CIRCLIP -	1	-
11	537147401	MAGNET -	1	-
12	503201501	SCREW -	1	-
13	574306801	CLAMP -	1	-
14	544087601	CLAMP -	1	-
15	537189501	SCREW -	1	-
16	732211601	LOCK NUT -	1	-

Ref.	Article N.	Description	Qty	Kit
17	503200210	SCREW IHSCFM -	1	-
18	574039501	LOCK NUT -	1	-
19	537351402	DRIVER -	1	-
20	537343501	SUPPORT FLANGE -	1	-
21	502291101	BLADE NUT -	1	-
22	503200325	SCREW IHSCFM -	2	-
1	537334301	INLET PIPE -	1	-
2	537371202	INSULATION WALL -	1	-
3	537371101	SLEEVE -	1	-
4	544019101	TUBULAR RIVET -	1	-
5	537373803	TUBULAR RIVET -	2	-
6	503200316	SCREW IHSCFM -	2	-
7	537341301	AIR DUCT -	1	-
8	575729001	CARBURETTOR *Zama C1Q-EL45*	1	-
9	503217550	SCREW IHSCFT -	2	-
10	503497101	GASKET -	1	-
11	537349001	LEVER -	1	-
12	544372701	SLEEVING BRACKET -	1	-
13	575841801	FILTER COVER -	1	-
14	537213209	KNOB -	1	-
15	575863702	FILTER HOLDER ASSY -	1	-
16	503212906	SCREW CCRPANT	2	-

Ref.	Article N.	Description	Qty	Kit
		-		
17	575841501	CHOKE CONTROL -	1	-
18	575841602	CHOKE LEVER -	1	-
19	544014601	LEVER -	1	-
20	544014701	BELLOWS -	1	-
21	544025801	BAR -	1	-
22	503231006	WASHER -	1	-
23	576215301	FILTER -	1	-
24	575863801	FRAME -	1	-
25	503200320	SCREW IHSCFM -	1	-
1	575729001	CARBURETTOR *Zama C1Q-EL45*	1	-
2	503479201	SCREW -	1	-
3	537417201	VALVE -	1	-
4	544372401	SPRING -	1	-
5	503480501	SCREW -	1	-
6	503974301	COVER -	1	-
7	504105601	DIAPHRAGM -	1	-
8	537020401	GASKET -	1	-
9	537387301	NOZZLE ASSY -	1	-
10	503480101	SCREW -	1	-
11	503480001	PIN RETAINING SCREW -	1	-
12	503665901	LEVER -	1	-

Ref.	Article N.	Description	Qty	Kit
13	503479701	VALVE -	1	-
14	537020301	SPRING -	1	-
15	501327101	SHAFT ASSY -	1	-
16	537370301	VALVE -	1	-
17	503481801	SCREW -	1	-
18	544372601	SPRING -	1	-
19	544372501	LEVER -	1	-
20	544427001	COLLAR -	1	-
21	504102701	SHAFT ASSY -	1	-
22	537012601	SPRING -	1	-
23	537012501	BALL -	1	-
24	503481301	STRAINER -	1	-
25	503479001	SCREW -	1	-
26	537416901	SCREW -	1	-
27	537417001	LIMITER CAP -	1	-
28	537387501	SCREW -	1	-
29	537385201	CLIP -	1	-
30	576270201	THROTTLE LEVER -	1	-
31	537020001	DIAPHRAGM PUMP -	1	-
32	537020101	GASKET -	1	-
33	537020201	COVER -	1	-
34	537020701	SCREW	1	-

Ref.	Article N.	Description	Qty	Kit
		-		
35	503481101	PIECE -	1	-
36	503479601	SCREW -	1	-
37	531004552	GASKET KIT *Set of gaskets*	1	-
1	574842901	CLUTCH COVER ASSY -	1	-
2	735312810	CIRCLIP -	1	-
3	738210104	BALL BEARING -	1	-
4	503240702	PARALLEL PIN -	2	-
5	537352901	CLUTCH DRUM -	1	-
6	735311400	CIRCLIP -	1	-
7	537340401	CLUTCH -	1	-
8	537427201	SPRING -	1	-
9	537046801	WASHER -	1	-
10	537415701	WASHER -	1	-
11	537418101	SCREW -	2	-
12	503217411	SCREW IHSCT -	1	-
13	537322701	ANTIVIBRATION ELEMENT -	1	-
14	537310101	COMPRESSION SLEEVE -	1	-
15	725533355	SCREW IHSCM -	1	-
16	575865801	COVER -	1	-
17	503200320	SCREW IHSCFM -	3	-
18	537418101	SCREW -	3	-

Ref.	Article N.	Description	Qty	Kit
1	585382201	CRANKCASE ASSY -	1	-
2	738210110	BALL BEARING -	2	-
3	503260202	SEALING RING -	2	-
4	593777601	GASKET -	1	-
5	503200230	SCREW IHSCFM -	4	-
6	593806001	GUIDE BUSHING -	2	-
7	537324201	INSERT -	1	-
1	575865002	CYLINDER COVER ASSY *Spare part with Captive Screw*	1	-
2	573994305	SCREW IHSCFMO *Captiv Screw*	1	-
3	575865701	PROTECTIVE PLATE *336 FR*	1	-
4	503200302	SCREW IHSCFM -	1	-
5	575864801	MUFFLER GUARD *Spare part with Captive Screw*	1	-
6	574477003	SCREW IHSCFMO *Captiv Screw*	2	-
7	576998614	LABEL *336 FR*	1	-
8	576998615	LABEL *135 R*	1	-
9	577231101	DAMPER *135 R*	1	-
1	574364301	CYLINDER ASSY	1	-
2	585998302	PISTON ASSY	1	-
3	503289054	PISTON RING	2	-
4	503289119	PISTON PIN	1	-
5	737441000	SNAP RING	2	-
6	503255501	NEEDLE BEARING	1	-
7	725533355	SCREW IHSCM	4	-
1	544328801	TANK ASSY -	1	-
2	503911001	SUSPENSION	4	-

Ref.	Article N.	Description	Qty	Kit
		-		
3	590324801	TANK CAP ASSY -	1	-
4	503936601	PURGE -	1	-
5	537042412	FUEL HOSE -	2	-
6	537052301	FUEL HOSE -	1	-
7	503735801	BUSHING -	2	-
8	537184901	O-RING -	1	-
9	503443201	FUEL FILTER -	1	-
1	537275702	HARNESS -	1	-
1	537275704	HARNESS *US*	1	-
2	537288301	BUCKLE -	1	-
3	537288401	BUCKLE -	1	-
4	537275901	HIP PAD -	1	-
5	502022801	HOOK -	1	-
6	502022902	HOOK -	1	-
7	502023002	LOCK -	1	-
8	586341001	SPRING -	1	-
9	735310920	E-CLIP -	1	-
10	503996101	BAND -	3	-
11	537113501	RETAINER -	1	-
12	503996103	BAND -	1	-
1	537249601	FLYWHEEL -	1	-

Ref.	Article N.	Description	Qty	Kit
2	731711651	HEXAGON NUT FLANGE -	1	-
3	544127001	IGNITION MODULE -	1	-
4	503202516	SCREW IHSCM -	2	-
5	503235109	SPARK PLUG -	1	-
6	537239301	CONTACT SPRING -	1	-
1	505408601	MUFFLER ASSY *CAT*	1	-
2	544116801	SPARK ARRESTER SCREEN -	1	-
3	724128759	SCREW CRPANM -	1	-
4	537333101	GASKET -	1	-
5	537340801	AIR CONDUCTOR -	1	-
6	503202963	SCREW IHSCFM -	2	-
7	503200320	SCREW IHSCFM -	1	-
1	501919701	TUBE ASSY -	1	-
2	537214101	TUBE -	1	-
3	537313901	GUIDE -	1	-
4	537360201	SPACER -	1	-
5	537360202	SPACER -	1	-
6	544183201	DRIVE SHAFT -	1	-
7	537130403	KNOB -	1	-
8	725233151	SCREW -	1	-
9	505161001	LOOP -	1	-
10	537350101	LOOP	1	-

Ref.	Article N.	Description	Qty	Kit
		-		
11	503217516	SCREW IHSCFT -	1	-
12	537376101	WIRING -	1	-
13	589295101	LABEL -	1	-
1	594729101	SHORT BLOCK ASSY *Assembled*	1	-
1	575840801	STARTER ASSY -	1	-
2	575840901	STARTER HOUSING *Spare part adapted for captive screw*	1	-
3	537325003	STARTER PULLEY -	1	-
4	503859901	RECOIL SPRING -	1	-
5	503218876	SCREW IHSCT -	1	-
6	503230080	WASHER -	1	-
7	537232501	STARTER HANDLE -	1	-
8	505305125	STARTER ROPE -	1	-
9	573994305	SCREW IHSCFMO *Captive screw*	3	-
10	577223601	DECAL -	1	-
11	503873305	STARTER PAWL -	1	-
12	503873502	STARTER PAWL -	2	-
13	503873601	SPRING -	2	-
14	735310820	E-CLIP -	2	-
1	537424507	HANDLE SYSTEM -	1	-
2	537160203	HANDLE HALF *HARD GRIP, GREY*	1	-
2	537160209	HANDLE HALF *SOFT GRIP, GREY + BLACK TPE*	1	-

Ref.	Article N.	Description	Qty	Kit
3	537160301	HANDLE HALF *HARD GRIP, GREY*	1	-
3	537160302	HANDLE HALF *SOFT GRIP, GREY + BLACK TPE*	1	-
4	503221013	HEXAGON NUT -	1	-
5	537359602	WIRING ASSY -	1	-
6	537377801	THROTTLE CABLE ASSY -	1	-
7	503216618	SCREW IHSCT -	1	-
8	503878507	SHORT CIRCUIT CABLE -	1	-
9	537419001	SWITCH -	1	-
10	506497701	THROTTLE CONTROL -	1	-
11	537174201	SPRING -	1	-
12	537160701	THROTTLE LOCKOUT -	1	-
13	537174301	SPRING -	1	-
14	503216618	SCREW IHSCT -	2	-
15	503200735	SCREW IHSCFM -	1	-
16	502199503	HANDLEBAR -	1	-
17	537172801	HANDLE -	1	-
18	537172901	COVER -	1	-
19	731231401	HEXAGON NUT -	1	-
20	503200245	SCREW IHSCFM -	1	-
21	503750002	HANDLEBAR BRACKET -	1	-
22	502211201	STAPLE -	1	-
1	576277401	HANDLEBAR BRACKET	1	-

Ref.	Article N.	Description	Qty	Kit
		-		
2	731231401	HEXAGON NUT -	4	-
3	502197101	SQUARE NUT -	1	-
4	502286101	CLIP -	1	-
5	502203801	KNOB -	1	-
6	725238351	SCREW EHHM -	1	-
7	576220101	COVER -	1	-
8	576220001	LID -	1	-
9	503200778	SCREW IHSCFM -	4	-
1	536805601	CRANKSHAFT ASSY	1	-
2	503260202	SEALING RING	2	-
3	738210110	BALL BEARING	2	-
4	503255501	NEEDLE BEARING	1	-

TOWER

C 135 R, 336 FR TOWER

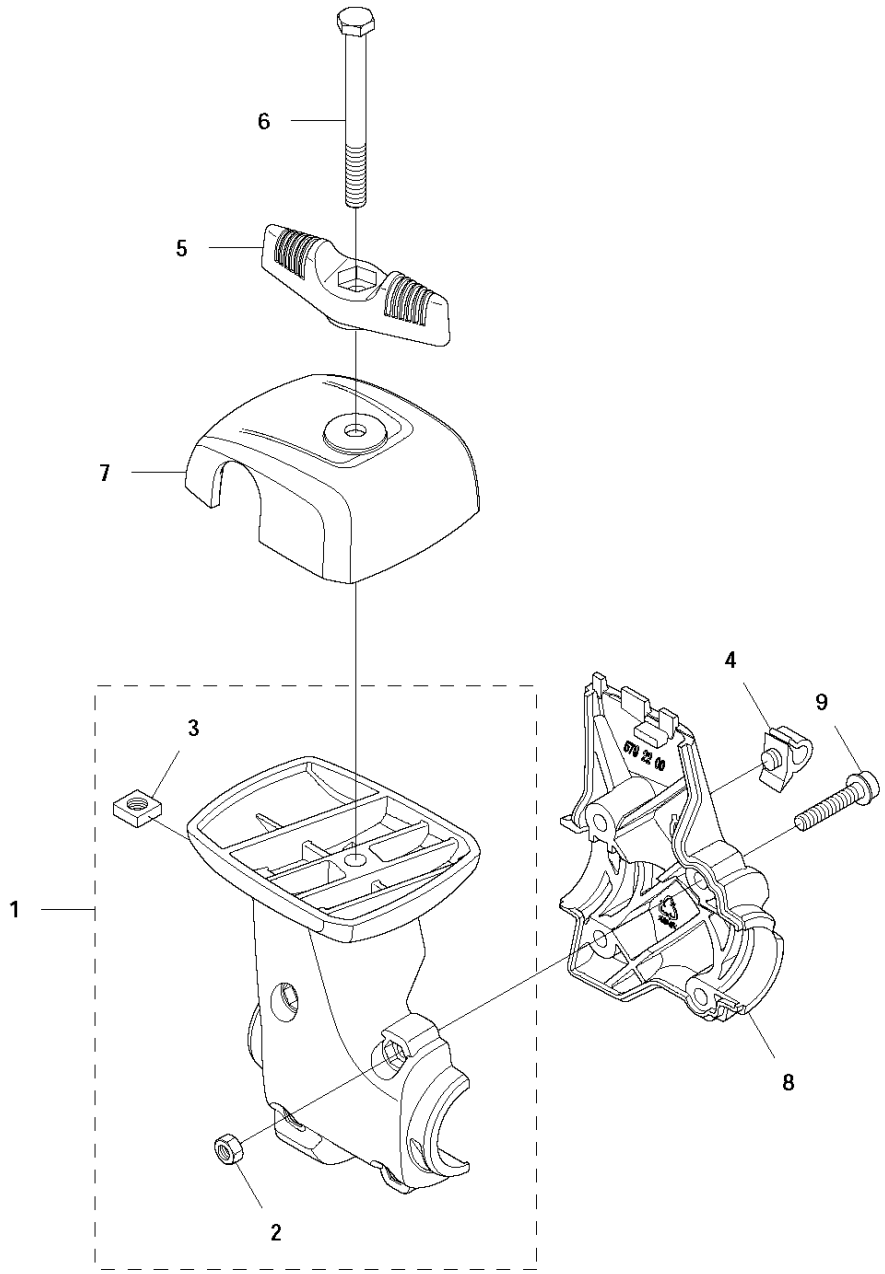

Ref.	Article N.	Description	Qty	Kit
1	501320402	SAW BLADE GUARD -	1	-
2	574530601	CLAMP *Spare part with Captive Screw*	1	-
3	573994304	SCREW IHSCFMO *Captive Screw*	2	-

Ref.	Article N.	Description	Qty	Kit
4	501320801	ADAPTER -	1	-
5	574532601	BLADE GUARD -	1	-
6	503200216	SCREW IHSCFM -	4	-
7	574039501	LOCK NUT -	4	-
8	537331603	SPLASH GUARD -	1	-
9	537396303	SPLASH GUARD -	1	-
10	503798802	BLADE -	1	-
11	503210716	SCREW IHSCT -	1	-
12	537387201	SNAP LOCKING -	4	-
13	537349403	TRIMMER GUARD ASSY -	1	-
14	503216825	SCREW IHSCFT -	1	-
15	503798802	BLADE -	1	-
16	544124501	RETAINER -	1	-
17	502448101	TRIMMER GUARD ASSY -	1	-
18	503216825	SCREW IHSCFT -	1	-
19	503798802	BLADE -	1	-
1	501192201	TOOL -	1	-
2	531009248	FILTER OIL -	1	-
3	503976501	GREASE -	1	-
4	502285901	STOP -	1	-
5	503801701	GREASE -	1	-
6	537362102	COMBINATION WRENCH	1	-

Ref.	Article N.	Description	Qty	Kit
		-		
7	544359101	TRANSPORT GUARD -	1	-
8	537312901	TRANSPORT GUARD -	1	-
9	503890102	SUPPORT CUP -	1	-
10	537216201	HARNESS -	1	-
10	537216202	HARNESS *USA*	1	-
1	544216401	GEAR -	1	-
2	537295902	GEAR HOUSING -	1	-
3	738219900	BALL BEARING -	1	-
4	505133301	SPARE PARTS KIT -	1	-
5	503252801	BALL BEARING -	1	-
6	735313110	CIRCLIP -	1	-
7	738210110	BALL BEARING -	1	-
8	738210112	BALL BEARING -	1	-
9	735311400	CIRCLIP -	1	-
10	735312810	CIRCLIP -	1	-
11	537147401	MAGNET -	1	-
12	503201501	SCREW -	1	-
13	574306801	CLAMP -	1	-
14	544087601	CLAMP -	1	-
15	537189501	SCREW -	1	-
16	732211601	LOCK NUT -	1	-

Ref.	Article N.	Description	Qty	Kit
17	503200210	SCREW IHSCFM -	1	-
18	574039501	LOCK NUT -	1	-
19	537351402	DRIVER -	1	-
20	537343501	SUPPORT FLANGE -	1	-
21	502291101	BLADE NUT -	1	-
22	503200325	SCREW IHSCFM -	2	-
1	537334301	INLET PIPE -	1	-
2	537371202	INSULATION WALL -	1	-
3	537371101	SLEEVE -	1	-
4	544019101	TUBULAR RIVET -	1	-
5	537373803	TUBULAR RIVET -	2	-
6	503200316	SCREW IHSCFM -	2	-
7	537341301	AIR DUCT -	1	-
8	575729001	CARBURETTOR *Zama C1Q-EL45*	1	-
9	503217550	SCREW IHSCFT -	2	-
10	503497101	GASKET -	1	-
11	537349001	LEVER -	1	-
12	544372701	SLEEVING BRACKET -	1	-
13	575841801	FILTER COVER -	1	-
14	537213209	KNOB -	1	-
15	575863702	FILTER HOLDER ASSY -	1	-
16	503212906	SCREW CCRPANT	2	-

Ref.	Article N.	Description	Qty	Kit
		-		
17	575841501	CHOKE CONTROL -	1	-
18	575841602	CHOKE LEVER -	1	-
19	544014601	LEVER -	1	-
20	544014701	BELLOWS -	1	-
21	544025801	BAR -	1	-
22	503231006	WASHER -	1	-
23	576215301	FILTER -	1	-
24	575863801	FRAME -	1	-
25	503200320	SCREW IHSCFM -	1	-
1	575729001	CARBURETTOR *Zama C1Q-EL45*	1	-
2	503479201	SCREW -	1	-
3	537417201	VALVE -	1	-
4	544372401	SPRING -	1	-
5	503480501	SCREW -	1	-
6	503974301	COVER -	1	-
7	504105601	DIAPHRAGM -	1	-
8	537020401	GASKET -	1	-
9	537387301	NOZZLE ASSY -	1	-
10	503480101	SCREW -	1	-
11	503480001	PIN RETAINING SCREW -	1	-
12	503665901	LEVER -	1	-

Ref.	Article N.	Description	Qty	Kit
13	503479701	VALVE -	1	-
14	537020301	SPRING -	1	-
15	501327101	SHAFT ASSY -	1	-
16	537370301	VALVE -	1	-
17	503481801	SCREW -	1	-
18	544372601	SPRING -	1	-
19	544372501	LEVER -	1	-
20	544427001	COLLAR -	1	-
21	504102701	SHAFT ASSY -	1	-
22	537012601	SPRING -	1	-
23	537012501	BALL -	1	-
24	503481301	STRAINER -	1	-
25	503479001	SCREW -	1	-
26	537416901	SCREW -	1	-
27	537417001	LIMITER CAP -	1	-
28	537387501	SCREW -	1	-
29	537385201	CLIP -	1	-
30	576270201	THROTTLE LEVER -	1	-
31	537020001	DIAPHRAGM PUMP -	1	-
32	537020101	GASKET -	1	-
33	537020201	COVER -	1	-
34	537020701	SCREW	1	-

Ref.	Article N.	Description	Qty	Kit
		-		
35	503481101	PIECE -	1	-
36	503479601	SCREW -	1	-
37	531004552	GASKET KIT *Set of gaskets*	1	-
1	574842901	CLUTCH COVER ASSY -	1	-
2	735312810	CIRCLIP -	1	-
3	738210104	BALL BEARING -	1	-
4	503240702	PARALLEL PIN -	2	-
5	537352901	CLUTCH DRUM -	1	-
6	735311400	CIRCLIP -	1	-
7	537340401	CLUTCH -	1	-
8	537427201	SPRING -	1	-
9	537046801	WASHER -	1	-
10	537415701	WASHER -	1	-
11	537418101	SCREW -	2	-
12	503217411	SCREW IHSCT -	1	-
13	537322701	ANTIVIBRATION ELEMENT -	1	-
14	537310101	COMPRESSION SLEEVE -	1	-
15	725533355	SCREW IHSCM -	1	-
16	575865801	COVER -	1	-
17	503200320	SCREW IHSCFM -	3	-
18	537418101	SCREW -	3	-

Ref.	Article N.	Description	Qty	Kit
1	585382201	CRANKCASE ASSY -	1	-
2	738210110	BALL BEARING -	2	-
3	503260202	SEALING RING -	2	-
4	593777601	GASKET -	1	-
5	503200230	SCREW IHSCFM -	4	-
6	593806001	GUIDE BUSHING -	2	-
7	537324201	INSERT -	1	-
1	575865002	CYLINDER COVER ASSY *Spare part with Captive Screw*	1	-
2	573994305	SCREW IHSCFMO *Captiv Screw*	1	-
3	575865701	PROTECTIVE PLATE *336 FR*	1	-
4	503200302	SCREW IHSCFM -	1	-
5	575864801	MUFFLER GUARD *Spare part with Captive Screw*	1	-
6	574477003	SCREW IHSCFMO *Captiv Screw*	2	-
7	576998614	LABEL *336 FR*	1	-
8	576998615	LABEL *135 R*	1	-
9	577231101	DAMPER *135 R*	1	-
1	574364301	CYLINDER ASSY	1	-
2	585998302	PISTON ASSY	1	-
3	503289054	PISTON RING	2	-
4	503289119	PISTON PIN	1	-
5	737441000	SNAP RING	2	-
6	503255501	NEEDLE BEARING	1	-
7	725533355	SCREW IHSCM	4	-
1	544328801	TANK ASSY -	1	-
2	503911001	SUSPENSION	4	-

Ref.	Article N.	Description	Qty	Kit
		-		
3	590324801	TANK CAP ASSY -	1	-
4	503936601	PURGE -	1	-
5	537042412	FUEL HOSE -	2	-
6	537052301	FUEL HOSE -	1	-
7	503735801	BUSHING -	2	-
8	537184901	O-RING -	1	-
9	503443201	FUEL FILTER -	1	-
1	537275702	HARNESS -	1	-
1	537275704	HARNESS *US*	1	-
2	537288301	BUCKLE -	1	-
3	537288401	BUCKLE -	1	-
4	537275901	HIP PAD -	1	-
5	502022801	HOOK -	1	-
6	502022902	HOOK -	1	-
7	502023002	LOCK -	1	-
8	586341001	SPRING -	1	-
9	735310920	E-CLIP -	1	-
10	503996101	BAND -	3	-
11	537113501	RETAINER -	1	-
12	503996103	BAND -	1	-
1	537249601	FLYWHEEL -	1	-

Ref.	Article N.	Description	Qty	Kit
2	731711651	HEXAGON NUT FLANGE -	1	-
3	544127001	IGNITION MODULE -	1	-
4	503202516	SCREW IHSCM -	2	-
5	503235109	SPARK PLUG -	1	-
6	537239301	CONTACT SPRING -	1	-
1	505408601	MUFFLER ASSY *CAT*	1	-
2	544116801	SPARK ARRESTER SCREEN -	1	-
3	724128759	SCREW CRPANM -	1	-
4	537333101	GASKET -	1	-
5	537340801	AIR CONDUCTOR -	1	-
6	503202963	SCREW IHSCFM -	2	-
7	503200320	SCREW IHSCFM -	1	-
1	501919701	TUBE ASSY -	1	-
2	537214101	TUBE -	1	-
3	537313901	GUIDE -	1	-
4	537360201	SPACER -	1	-
5	537360202	SPACER -	1	-
6	544183201	DRIVE SHAFT -	1	-
7	537130403	KNOB -	1	-
8	725233151	SCREW -	1	-
9	505161001	LOOP -	1	-
10	537350101	LOOP	1	-

Ref.	Article N.	Description	Qty	Kit
		-		
11	503217516	SCREW IHSCFT -	1	-
12	537376101	WIRING -	1	-
13	589295101	LABEL -	1	-
1	594729101	SHORT BLOCK ASSY *Assembled*	1	-
1	575840801	STARTER ASSY -	1	-
2	575840901	STARTER HOUSING *Spare part adapted for captive screw*	1	-
3	537325003	STARTER PULLEY -	1	-
4	503859901	RECOIL SPRING -	1	-
5	503218876	SCREW IHSCT -	1	-
6	503230080	WASHER -	1	-
7	537232501	STARTER HANDLE -	1	-
8	505305125	STARTER ROPE -	1	-
9	573994305	SCREW IHSCFMO *Captive screw*	3	-
10	577223601	DECAL -	1	-
11	503873305	STARTER PAWL -	1	-
12	503873502	STARTER PAWL -	2	-
13	503873601	SPRING -	2	-
14	735310820	E-CLIP -	2	-
1	537424507	HANDLE SYSTEM -	1	-
2	537160203	HANDLE HALF *HARD GRIP, GREY*	1	-
2	537160209	HANDLE HALF *SOFT GRIP, GREY + BLACK TPE*	1	-

Ref.	Article N.	Description	Qty	Kit
3	537160301	HANDLE HALF *HARD GRIP, GREY*	1	-
3	537160302	HANDLE HALF *SOFT GRIP, GREY + BLACK TPE*	1	-
4	503221013	HEXAGON NUT -	1	-
5	537359602	WIRING ASSY -	1	-
6	537377801	THROTTLE CABLE ASSY -	1	-
7	503216618	SCREW IHSCT -	1	-
8	503878507	SHORT CIRCUIT CABLE -	1	-
9	537419001	SWITCH -	1	-
10	506497701	THROTTLE CONTROL -	1	-
11	537174201	SPRING -	1	-
12	537160701	THROTTLE LOCKOUT -	1	-
13	537174301	SPRING -	1	-
14	503216618	SCREW IHSCT -	2	-
15	503200735	SCREW IHSCFM -	1	-
16	502199503	HANDLEBAR -	1	-
17	537172801	HANDLE -	1	-
18	537172901	COVER -	1	-
19	731231401	HEXAGON NUT -	1	-
20	503200245	SCREW IHSCFM -	1	-
21	503750002	HANDLEBAR BRACKET -	1	-
22	502211201	STAPLE -	1	-
1	576277401	HANDLEBAR BRACKET	1	-

Ref.	Article N.	Description	Qty	Kit
		-		
2	731231401	HEXAGON NUT -	4	-
3	502197101	SQUARE NUT -	1	-
4	502286101	CLIP -	1	-
5	502203801	KNOB -	1	-
6	725238351	SCREW EHHM -	1	-
7	576220101	COVER -	1	-
8	576220001	LID -	1	-
9	503200778	SCREW IHSCFM -	4	-
1	536805601	CRANKSHAFT ASSY	1	-
2	503260202	SEALING RING	2	-
3	738210110	BALL BEARING	2	-
4	503255501	NEEDLE BEARING	1	-

CRANKSHAFT

N 135 R, 336 FR
CRANK SHAFT

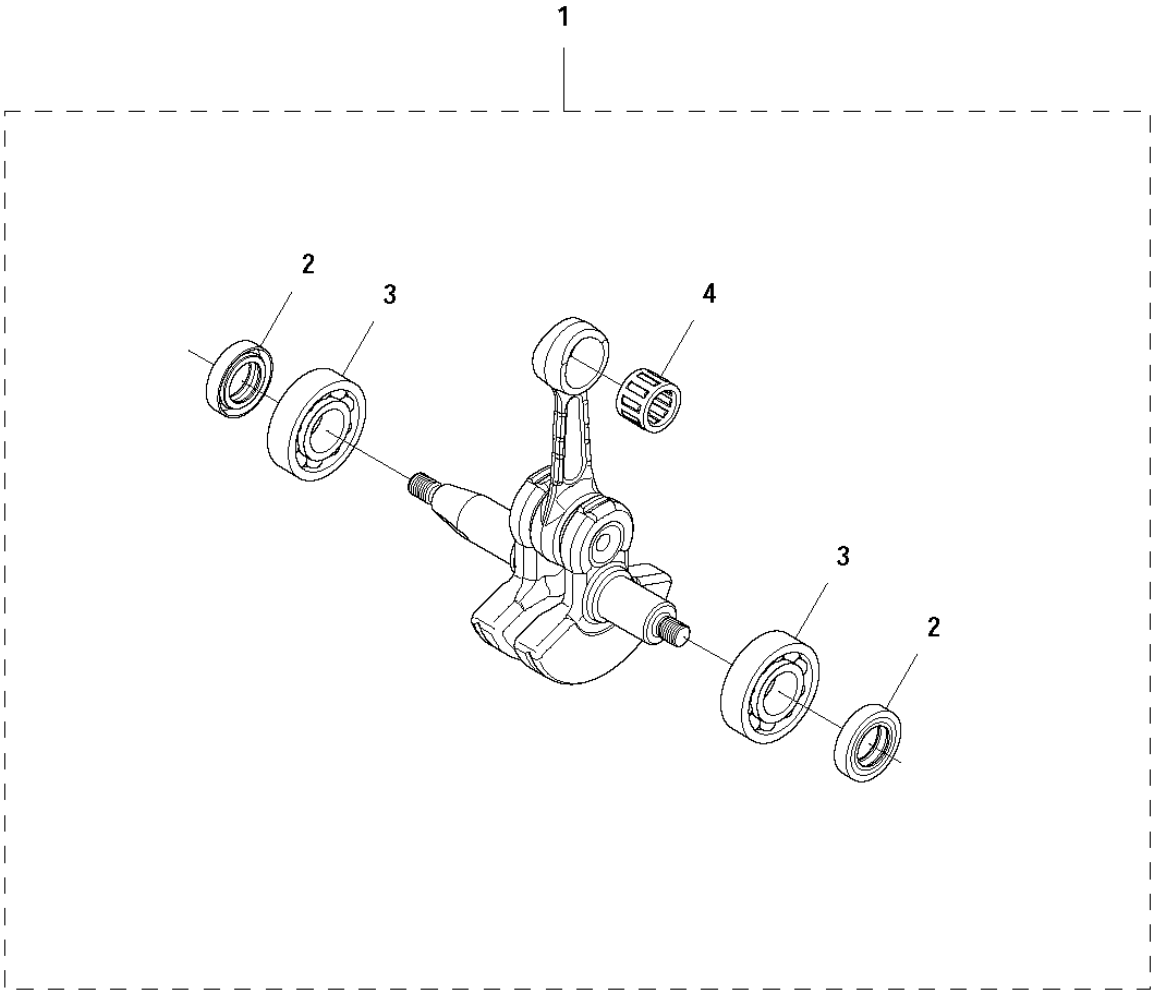

Ref.	Article N.	Description	Qty	Kit
1	501320402	SAW BLADE GUARD -	1	-
2	574530601	CLAMP *Spare part with Captive Screw*	1	-
3	573994304	SCREW IHSCFMO *Captive Screw*	2	-
4	501320801	ADAPTER -	1	-
5	574532601	BLADE GUARD -	1	-
6	503200216	SCREW IHSCFM -	4	-

Ref.	Article N.	Description	Qty	Kit
7	574039501	LOCK NUT -	4	-
8	537331603	SPLASH GUARD -	1	-
9	537396303	SPLASH GUARD -	1	-
10	503798802	BLADE -	1	-
11	503210716	SCREW IHSCT -	1	-
12	537387201	SNAP LOCKING -	4	-
13	537349403	TRIMMER GUARD ASSY -	1	-
14	503216825	SCREW IHSCFT -	1	-
15	503798802	BLADE -	1	-
16	544124501	RETAINER -	1	-
17	502448101	TRIMMER GUARD ASSY -	1	-
18	503216825	SCREW IHSCFT -	1	-
19	503798802	BLADE -	1	-
1	501192201	TOOL -	1	-
2	531009248	FILTER OIL -	1	-
3	503976501	GREASE -	1	-
4	502285901	STOP -	1	-
5	503801701	GREASE -	1	-
6	537362102	COMBINATION WRENCH -	1	-
7	544359101	TRANSPORT GUARD -	1	-
8	537312901	TRANSPORT GUARD -	1	-
9	503890102	SUPPORT CUP	1	-

Ref.	Article N.	Description	Qty	Kit
		-		
10	537216201	HARNESS -	1	-
10	537216202	HARNESS *USA*	1	-
1	544216401	GEAR -	1	-
2	537295902	GEAR HOUSING -	1	-
3	738219900	BALL BEARING -	1	-
4	505133301	SPARE PARTS KIT -	1	-
5	503252801	BALL BEARING -	1	-
6	735313110	CIRCLIP -	1	-
7	738210110	BALL BEARING -	1	-
8	738210112	BALL BEARING -	1	-
9	735311400	CIRCLIP -	1	-
10	735312810	CIRCLIP -	1	-
11	537147401	MAGNET -	1	-
12	503201501	SCREW -	1	-
13	574306801	CLAMP -	1	-
14	544087601	CLAMP -	1	-
15	537189501	SCREW -	1	-
16	732211601	LOCK NUT -	1	-
17	503200210	SCREW IHSCFM -	1	-
18	574039501	LOCK NUT -	1	-
19	537351402	DRIVER -	1	-

Ref.	Article N.	Description	Qty	Kit
20	537343501	SUPPORT FLANGE -	1	-
21	502291101	BLADE NUT -	1	-
22	503200325	SCREW IHSCFM -	2	-
1	537334301	INLET PIPE -	1	-
2	537371202	INSULATION WALL -	1	-
3	537371101	SLEEVE -	1	-
4	544019101	TUBULAR RIVET -	1	-
5	537373803	TUBULAR RIVET -	2	-
6	503200316	SCREW IHSCFM -	2	-
7	537341301	AIR DUCT -	1	-
8	575729001	CARBURETTOR *Zama C1Q-EL45*	1	-
9	503217550	SCREW IHSCFT -	2	-
10	503497101	GASKET -	1	-
11	537349001	LEVER -	1	-
12	544372701	SLEEVING BRACKET -	1	-
13	575841801	FILTER COVER -	1	-
14	537213209	KNOB -	1	-
15	575863702	FILTER HOLDER ASSY -	1	-
16	503212906	SCREW CCRPANT -	2	-
17	575841501	CHOKE CONTROL -	1	-
18	575841602	CHOKE LEVER -	1	-
19	544014601	LEVER	1	-

Ref.	Article N.	Description	Qty	Kit
		-		
20	544014701	BELLOWS -	1	-
21	544025801	BAR -	1	-
22	503231006	WASHER -	1	-
23	576215301	FILTER -	1	-
24	575863801	FRAME -	1	-
25	503200320	SCREW IHSCFM -	1	-
1	575729001	CARBURETTOR *Zama C1Q-EL45*	1	-
2	503479201	SCREW -	1	-
3	537417201	VALVE -	1	-
4	544372401	SPRING -	1	-
5	503480501	SCREW -	1	-
6	503974301	COVER -	1	-
7	504105601	DIAPHRAGM -	1	-
8	537020401	GASKET -	1	-
9	537387301	NOZZLE ASSY -	1	-
10	503480101	SCREW -	1	-
11	503480001	PIN RETAINING SCREW -	1	-
12	503665901	LEVER -	1	-
13	503479701	VALVE -	1	-
14	537020301	SPRING -	1	-
15	501327101	SHAFT ASSY -	1	-

Ref.	Article N.	Description	Qty	Kit
16	537370301	VALVE -	1	-
17	503481801	SCREW -	1	-
18	544372601	SPRING -	1	-
19	544372501	LEVER -	1	-
20	544427001	COLLAR -	1	-
21	504102701	SHAFT ASSY -	1	-
22	537012601	SPRING -	1	-
23	537012501	BALL -	1	-
24	503481301	STRAINER -	1	-
25	503479001	SCREW -	1	-
26	537416901	SCREW -	1	-
27	537417001	LIMITER CAP -	1	-
28	537387501	SCREW -	1	-
29	537385201	CLIP -	1	-
30	576270201	THROTTLE LEVER -	1	-
31	537020001	DIAPHRAGM PUMP -	1	-
32	537020101	GASKET -	1	-
33	537020201	COVER -	1	-
34	537020701	SCREW -	1	-
35	503481101	PIECE -	1	-
36	503479601	SCREW -	1	-
37	531004552	GASKET KIT	1	-

Ref.	Article N.	Description	Qty	Kit
		Set of gaskets		
1	574842901	CLUTCH COVER ASSY -	1	-
2	735312810	CIRCLIP -	1	-
3	738210104	BALL BEARING -	1	-
4	503240702	PARALLEL PIN -	2	-
5	537352901	CLUTCH DRUM -	1	-
6	735311400	CIRCLIP -	1	-
7	537340401	CLUTCH -	1	-
8	537427201	SPRING -	1	-
9	537046801	WASHER -	1	-
10	537415701	WASHER -	1	-
11	537418101	SCREW -	2	-
12	503217411	SCREW IHSCT -	1	-
13	537322701	ANTIVIBRATION ELEMENT -	1	-
14	537310101	COMPRESSION SLEEVE -	1	-
15	725533355	SCREW IHSCM -	1	-
16	575865801	COVER -	1	-
17	503200320	SCREW IHSCFM -	3	-
18	537418101	SCREW -	3	-
1	585382201	CRANKCASE ASSY -	1	-
2	738210110	BALL BEARING -	2	-
3	503260202	SEALING RING -	2	-

Ref.	Article N.	Description	Qty	Kit
4	593777601	GASKET -	1	-
5	503200230	SCREW IHSCFM -	4	-
6	593806001	GUIDE BUSHING -	2	-
7	537324201	INSERT -	1	-
1	575865002	CYLINDER COVER ASSY *Spare part with Captive Screw*	1	-
2	573994305	SCREW IHSCFMO *Captiv Screw*	1	-
3	575865701	PROTECTIVE PLATE *336 FR*	1	-
4	503200302	SCREW IHSCFM -	1	-
5	575864801	MUFFLER GUARD *Spare part with Captive Screw*	1	-
6	574477003	SCREW IHSCFMO *Captiv Screw*	2	-
7	576998614	LABEL *336 FR*	1	-
8	576998615	LABEL *135 R*	1	-
9	577231101	DAMPER *135 R*	1	-
1	574364301	CYLINDER ASSY	1	-
2	585998302	PISTON ASSY	1	-
3	503289054	PISTON RING	2	-
4	503289119	PISTON PIN	1	-
5	737441000	SNAP RING	2	-
6	503255501	NEEDLE BEARING	1	-
7	725533355	SCREW IHSCM	4	-
1	544328801	TANK ASSY -	1	-
2	503911001	SUSPENSION -	4	-
3	590324801	TANK CAP ASSY -	1	-
4	503936601	PURGE -	1	-
5	537042412	FUEL HOSE	2	-

Ref.	Article N.	Description	Qty	Kit
		-		
6	537052301	FUEL HOSE -	1	-
7	503735801	BUSHING -	2	-
8	537184901	O-RING -	1	-
9	503443201	FUEL FILTER -	1	-
1	537275702	HARNESS -	1	-
1	537275704	HARNESS *US*	1	-
2	537288301	BUCKLE -	1	-
3	537288401	BUCKLE -	1	-
4	537275901	HIP PAD -	1	-
5	502022801	HOOK -	1	-
6	502022902	HOOK -	1	-
7	502023002	LOCK -	1	-
8	586341001	SPRING -	1	-
9	735310920	E-CLIP -	1	-
10	503996101	BAND -	3	-
11	537113501	RETAINER -	1	-
12	503996103	BAND -	1	-
1	537249601	FLYWHEEL -	1	-
2	731711651	HEXAGON NUT FLANGE -	1	-
3	544127001	IGNITION MODULE -	1	-
4	503202516	SCREW IHSCM -	2	-

Ref.	Article N.	Description	Qty	Kit
5	503235109	SPARK PLUG -	1	-
6	537239301	CONTACT SPRING -	1	-
1	505408601	MUFFLER ASSY *CAT*	1	-
2	544116801	SPARK ARRESTER SCREEN -	1	-
3	724128759	SCREW CRPANM -	1	-
4	537333101	GASKET -	1	-
5	537340801	AIR CONDUCTOR -	1	-
6	503202963	SCREW IHSCFM -	2	-
7	503200320	SCREW IHSCFM -	1	-
1	501919701	TUBE ASSY -	1	-
2	537214101	TUBE -	1	-
3	537313901	GUIDE -	1	-
4	537360201	SPACER -	1	-
5	537360202	SPACER -	1	-
6	544183201	DRIVE SHAFT -	1	-
7	537130403	KNOB -	1	-
8	725233151	SCREW -	1	-
9	505161001	LOOP -	1	-
10	537350101	LOOP -	1	-
11	503217516	SCREW IHSCFT -	1	-
12	537376101	WIRING -	1	-
13	589295101	LABEL	1	-

Ref.	Article N.	Description	Qty	Kit
		-		
1	594729101	SHORT BLOCK ASSY *Assembled*	1	-
1	575840801	STARTER ASSY -	1	-
2	575840901	STARTER HOUSING *Spare part adapted for captive screw*	1	-
3	537325003	STARTER PULLEY -	1	-
4	503859901	RECOIL SPRING -	1	-
5	503218876	SCREW IHSCT -	1	-
6	503230080	WASHER -	1	-
7	537232501	STARTER HANDLE -	1	-
8	505305125	STARTER ROPE -	1	-
9	573994305	SCREW IHSCFMO *Captive screw*	3	-
10	577223601	DECAL -	1	-
11	503873305	STARTER PAWL -	1	-
12	503873502	STARTER PAWL -	2	-
13	503873601	SPRING -	2	-
14	735310820	E-CLIP -	2	-
1	537424507	HANDLE SYSTEM -	1	-
2	537160203	HANDLE HALF *HARD GRIP, GREY*	1	-
2	537160209	HANDLE HALF *SOFT GRIP, GREY + BLACK TPE*	1	-
3	537160301	HANDLE HALF *HARD GRIP, GREY*	1	-
3	537160302	HANDLE HALF *SOFT GRIP, GREY + BLACK TPE*	1	-
4	503221013	HEXAGON NUT -	1	-

Ref.	Article N.	Description	Qty	Kit
5	537359602	WIRING ASSY -	1	-
6	537377801	THROTTLE CABLE ASSY -	1	-
7	503216618	SCREW IHSCT -	1	-
8	503878507	SHORT CIRCUIT CABLE -	1	-
9	537419001	SWITCH -	1	-
10	506497701	THROTTLE CONTROL -	1	-
11	537174201	SPRING -	1	-
12	537160701	THROTTLE LOCKOUT -	1	-
13	537174301	SPRING -	1	-
14	503216618	SCREW IHSCT -	2	-
15	503200735	SCREW IHSCFM -	1	-
16	502199503	HANDLEBAR -	1	-
17	537172801	HANDLE -	1	-
18	537172901	COVER -	1	-
19	731231401	HEXAGON NUT -	1	-
20	503200245	SCREW IHSCFM -	1	-
21	503750002	HANDLEBAR BRACKET -	1	-
22	502211201	STAPLE -	1	-
1	576277401	HANDLEBAR BRACKET -	1	-
2	731231401	HEXAGON NUT -	4	-
3	502197101	SQUARE NUT -	1	-
4	502286101	CLIP	1	-

Ref.	Article N.	Description	Qty	Kit
		-		
5	502203801	KNOB -	1	-
6	725238351	SCREW EHHM -	1	-
7	576220101	COVER -	1	-
8	576220001	LID -	1	-
9	503200778	SCREW IHSCFM -	4	-
1	536805601	CRANKSHAFT ASSY	1	-
2	503260202	SEALING RING	2	-
3	738210110	BALL BEARING	2	-
4	503255501	NEEDLE BEARING	1	-