Product Catalog: Husqvarna/150BT 2021 and up

BLOWER HOUSING

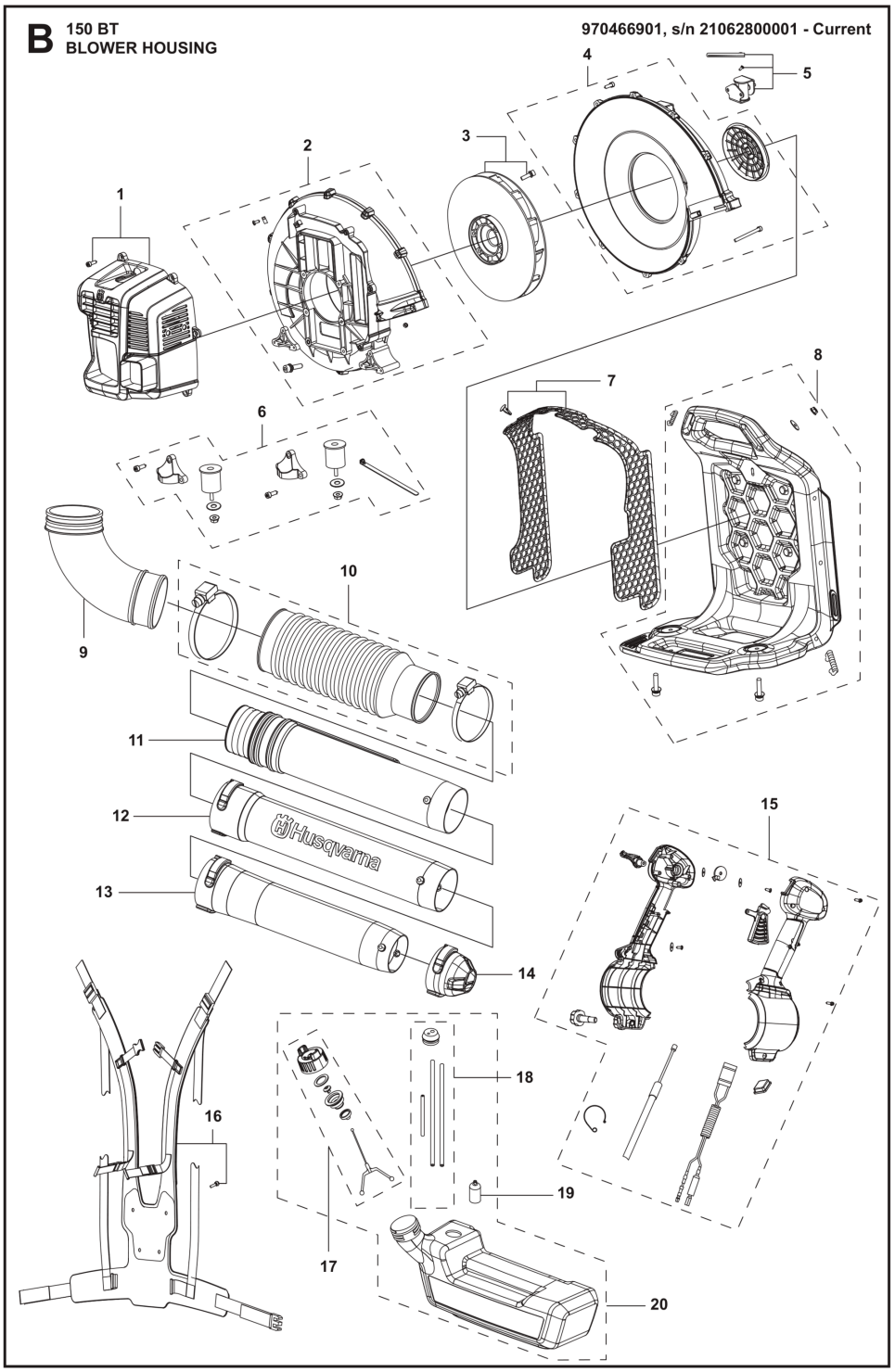

Ref.	Article N.	Description	Qty	Kit
1	531147166	COVER	1	-
2	531147167	CASE	1	-
3	531147168	FAN	1	-
4	531147169	COVER	1	-
5	531147170	SUPPORT	1	-
6	501424333	REPAIR KIT	1	-
7	531147171	COVER	1	-
8	531147172	FRAME	1	-
9	531147174	TUBE	1	-
10	501424346	REPAIR KIT	1	-
11	531147165	SWIVEL	1	-
12	531147164	PIPE	1	-
13	531147163	PIPE	1	-
14	531147162	PIPE	1	-
15	531147175	HANDLE	1	-
16	531147173	HARNESS	1	-
17	531147177	CAP	1	-
18	531147178	GROMMET	1	-
19	531147179	FUEL FILTER	1	-
20	531147176	FUEL TANK	1	-
1	535316001	KEEPER -	1	-
2	535316301	AIR FILTER -	1	-
3	535542601	CARBURETTOR AIRBOX SYSTEM -	1	-
4	535316601	PURGE -	1	-
5	535316501	BAFFLE -	1	-
6	503235111	SPARK PLUG -	1	-
7	531147160	MUFFLER -	1	-
8	535316801	GASKET -	1	-
9	531147153	PISTON -	1	-
10	535316701	GASKET KIT -	1	-
11	531147180	CARBURETTOR	1	-

Ref.	Article N.	Description	Qty	Kit
		-		
12	531147159	STARTER ASSY -	1	-
13	531147157	SEAL -	1	-
14	531147156	GASKET -	1	-
15	531147154	BEARING -	1	-
16	531147155	CRANKSHAFT -	1	-
17	531147158	SEAL -	1	-
18	501424373	REPAIR KIT -	1	-
19	531147161	IGNITION COIL -	1	-

ENGINE

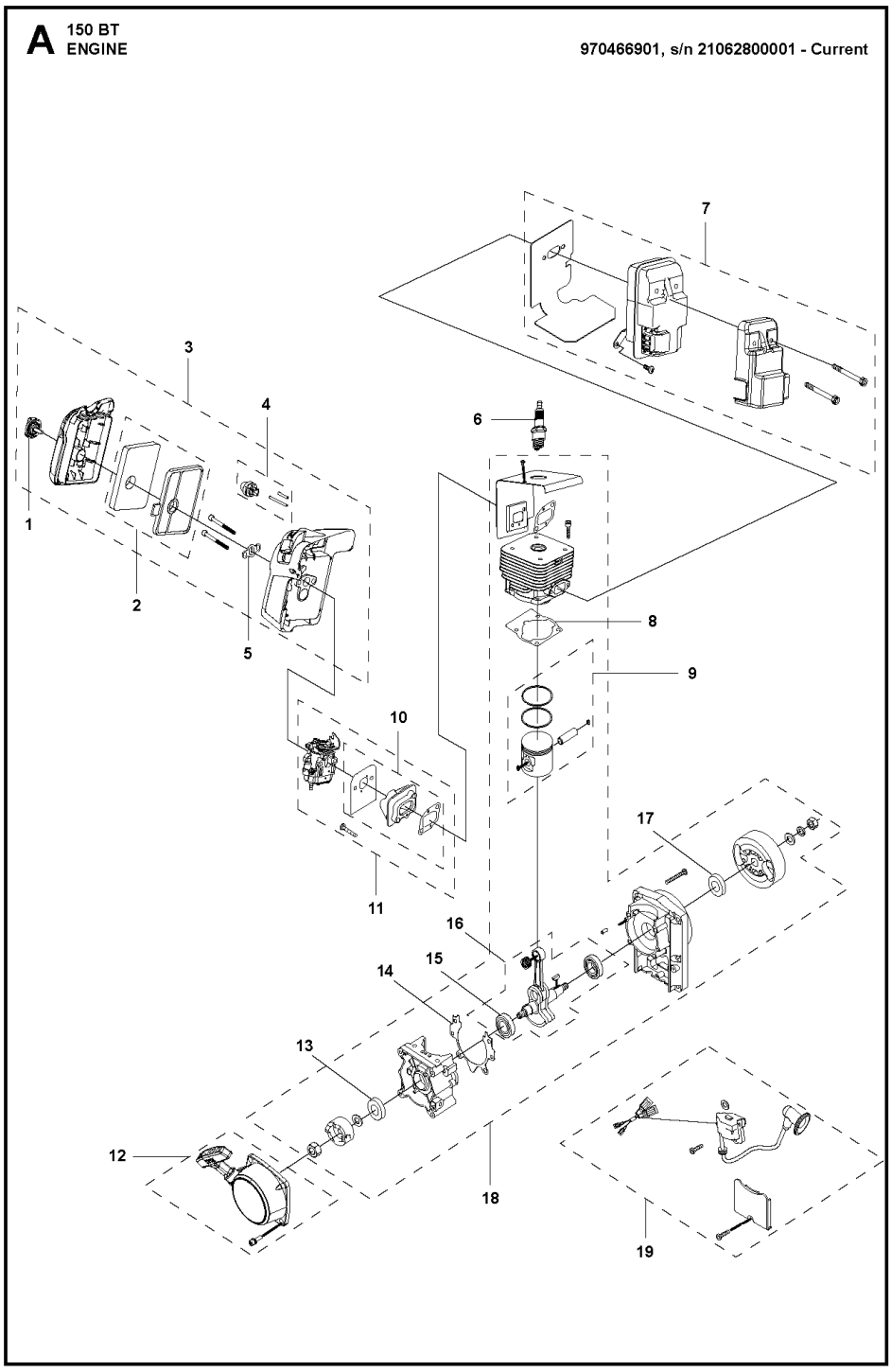

Ref.	Article N.	Description	Qty	Kit
1	531147166	COVER	1	-
2	531147167	CASE	1	-
3	531147168	FAN	1	-
4	531147169	COVER	1	-
5	531147170	SUPPORT	1	-

Ref.	Article N.	Description	Qty	Kit
6	501424333	REPAIR KIT	1	-
7	531147171	COVER	1	-
8	531147172	FRAME	1	-
9	531147174	TUBE	1	-
10	501424346	REPAIR KIT	1	-
11	531147165	SWIVEL	1	-
12	531147164	PIPE	1	-
13	531147163	PIPE	1	-
14	531147162	PIPE	1	-
15	531147175	HANDLE	1	-
16	531147173	HARNESS	1	-
17	531147177	CAP	1	-
18	531147178	GROMMET	1	-
19	531147179	FUEL FILTER	1	-
20	531147176	FUEL TANK	1	-
1	535316001	KEEPER -	1	-
2	535316301	AIR FILTER -	1	-
3	535542601	CARBURETTOR AIRBOX SYSTEM -	1	-
4	535316601	PURGE -	1	-
5	535316501	BAFFLE -	1	-
6	503235111	SPARK PLUG -	1	-
7	531147160	MUFFLER -	1	-
8	535316801	GASKET -	1	-
9	531147153	PISTON -	1	-
10	535316701	GASKET KIT -	1	-
11	531147180	CARBURETTOR -	1	-
12	531147159	STARTER ASSY -	1	-
13	531147157	SEAL -	1	-

Ref.	Article N.	Description	Qty	Kit
14	531147156	GASKET -	1	-
15	531147154	BEARING -	1	-
16	531147155	CRANKSHAFT -	1	-
17	531147158	SEAL -	1	-
18	501424373	REPAIR KIT -	1	-
19	531147161	IGNITION COIL -	1	-