Product Catalog: Husqvarna/372 XP® / 372 XP® G / 372 XP® W / 372 XP® GW

ACCESSORIES

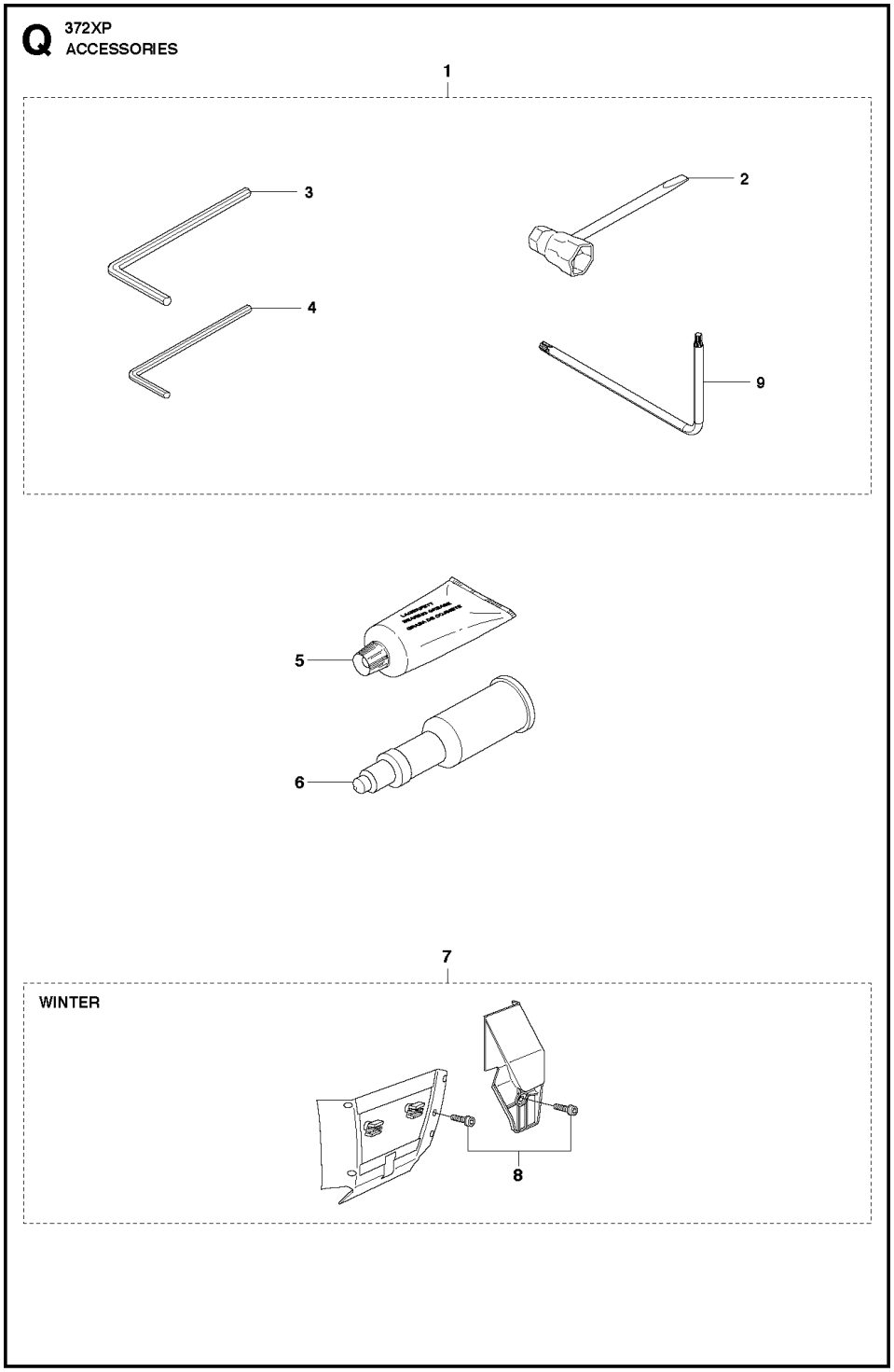

Ref.	Article N.	Description	Qty	Kit
1	588797401	TOOL -	1	-
2	501691701	COMBINATION WRENCH -	1	-
3	503558602	SPANNER *NV5*	1	-
4	503558601	SPANNER *NV4*	1	-
5	503621201	GREASE -	1	-
6	501911401	GREASE GUN -	1	-
7	503969011	WINTER KIT *WINTER*	1	-
8	586505201	SCREW CITXPANT -	1	-
9	575880701	WRENCH *TORX T27/T20*	1	-
1	575269101	AIR FILTER ASSY *80µ*	1	-
1	575269103	AIR FILTER ASSY *Felt*	1	-
1	575269102	AIR FILTER ASSY *44µ*	1	-
2	503735401	CLAMP	1	-
3	537213204	KNOB	1	-
4	503818004	AIR FILTER *Felt*	1	-
4	503818005	AIR FILTER *80µ*	1	-
4	503818006	AIR FILTER *44µ*	1	-
5	503817801	FILTER HOLDER	1	-
6	731231401	HEXAGON NUT	1	-
7	581143001	SCREW ITXSCM	2	-
8	503701101	TUBE	2	-
9	503627502	FILTER HOLDER	1	-
10	503684101	LEVER	1	-
11	503667401	GUIDE BUSHING *Walbro HD-12B*	1	-
11	503665301	GUIDE BUSHING *Walbro HD-6B & HD-12C*	1	-

Ref.	Article N.	Description	Qty	Kit
12	536033701	CARBURETTOR	1	-
13	503400606	IMPULSE HOSE	1	-
14	503431801	SUPPORT SLEEVE	1	-
15	503712701	FLANGE	1	-
16	503226503	SQUARE NUT	2	-
17	503964501	INLET PIPE	1	-
17	503964502	INLET PIPE *For cold conditions*	1	-
18	505283309	HOSE CLAMP	1	-
1	536033701	CARBURETTOR	1	-
2	503647801	REPAIR KIT	1	-
3	501666101	SCREEN	1	-
4	503574201	PLUG	1	-
5	503563401	NEEDLE VALVE	1	-
6	501668301	LEVER	1	-
7	505520125	PIN	1	-
1	525755201	SCREW ITXSCFM -	4	-
2	503751103	HUB CAP -	1	-
3	525887402	SCREW CITXPANT -	1	-
4	501875303	KNEE JOINT -	1	-
5	586438501	SCREW ITXSCM -	1	-
6	503764903	HAND GUARD -	1	-
7	503436501	POSITION SPRING -	1	-
8	503838102	LOCK -	1	-
9	537008701	BRAKE LEVER -	1	-
10	503775201	BUSHING -	1	-
11	503709902	BRAKE SPRING -	1	-
12	503792702	SUPPORT -	1	-
13	503752202	BRAKE BAND ASSY	1	-

Ref.	Article N.	Description	Qty	Kit
		-		
14	537033501	CLUTCH COVER ASSY -	1	-
15	537033571	CLUTCH COVER ASSY -	1	-
16	537033803	LABEL -	1	-
17	503762902	CHIP GUARD -	1	-
18	503897001	SLEEVE -	1	-
19	525887402	SCREW CITXPANT -	1	-
20	525887402	SCREW CITXPANT -	2	-
21	537044102	CHAIN TENSIONER -	1	-
22	537016801	COVER -	1	-
23	503230066	WASHER -	1	-
24	537079502	WORM SCREW -	1	-
25	503998301	PAWL -	1	-
26	537017401	BEARING SLEEVE -	1	-
27	537079402	WORM WHEEL -	1	-
28	503230063	WASHER -	1	-
29	740480702	O-RING -	1	-
30	501517201	CHAIN GUIDE -	1	-
31	503220001	HEXAGON NUT -	2	-
31	503220010	NUT *30 pcs, plastic bag of 503220001*	1	-
32	525887402	SCREW CITXPANT -	1	-
33	503922701	SPIKE *372 WRAP*	1	-

Ref.	Article N.	Description	Qty	Kit
34	503719701	SPIKE -	1	-
1	503521303	OIL PUMP ASSY -	1	-
2	503624901	SEALING PLUG -	1	-
3	503521501	PUMP PISTON -	1	-
4	503230004	WASHER -	2	-
5	501615801	SPRING -	1	-
6	503813001	SPRING -	1	-
7	503811301	SCREW -	1	-
8	525824912	SCREW ITXSCM -	2	-
9	537207807	PUMP PINION -	1	-
10	503774301	OIL PIPE -	1	-
11	503644701	BUSHING *Up to serial number 20182009999*	1	-
11	587291801	OIL PRESSURE HOSE *From serial number 20182100001*	1	-
12	504300026	SEALING -	1	-
13	503426701	OIL HOSE -	1	-
14	501544102	OIL SCREEN -	1	-
15	503272101	E-CLIP -	1	-
16	503752401	WASHER -	1	-
17	586980602	CLUTCH DRUM ASSY *3/8x8T*	1	-
17	586980601	CLUTCH DRUM ASSY *3/8x7T*	1	-
18	501598002	RIM SPROCKET *3/8x7T*	1	-
18	505303661	RIM SPROCKET	1	-

Ref.	Article N.	Description	Qty	Kit
		3/8x8T		
19	503432001	NEEDLE HOLDER *3/8*	1	-
20	586798401	CLUTCH ASSY -	1	-
21	537360601	CLUTCH SPRING -	3	-
22	503230059	WASHER -	1	-
1	503626819	CRANKCASE ASSY -	1	-
2	503967001	BUSHING -	1	-
3	503260301	SEALING RING -	1	-
4	503751801	PIN -	1	-
5	501270801	GUIDE BUSHING -	1	-
6	501270801	GUIDE BUSHING -	1	-
7	537051301	BAR BOLT -	2	-
8	525887402	SCREW CITXPANT -	1	-
9	537013702	CHAIN GUIDE PLATE *From serial number 20182100001*	1	-
9	537046601	KIT *Up to serial number 20182009999*	1	-
10	586445401	SCREW ITXSCM -	1	-
11	525755201	SCREW ITXSCFM -	4	-
12	588093701	CARBURETTOR AREA BASE -	1	-
13	503734401	GROMMET -	1	-
14	503627701	CHOKE CONTROL -	1	-
15	579468901	SUPPORT -	1	-
16	537095401	GROMMET -	1	-

Ref.	Article N.	Description	Qty	Kit
17	525824913	SCREW ITXSCM -	2	-
18	501686801	CHAIN CATCHER -	1	-
19	503627201	GASKET -	1	-
20	503857301	COVER -	1	-
21	505275719	SEALING RING -	1	-
22	503628401	AIR NOZZLE -	1	-
23	525755201	SCREW ITXSCFM -	1	-
24	503846101	BUFFER -	1	-
25	537215207	TANK CAP ASSY -	1	-
26	503578901	HOLDER -	1	-
27	589241101	GASKET -	1	-
28	575791202	SCREW ITXSCM -	6	-
29	537403501	FILTER -	1	-
30	530026119	CHECK VALVE -	1	-
31	537042901	BUMPER -	1	-
32	525755103	SCREW ITXSCFM -	1	-
33	537024401	WEAR PROTECTION -	1	-
34	537089201	CHAIN CATCHER -	1	-
35	575793501	SCREW ITXPANM -	2	-
36	537017101	SPIKE -	1	-
37	503222401	LOCK NUT -	1	-
38	503647902	SPIKE	1	-

Ref.	Article N.	Description	Qty	Kit
		-		
39	503647201	GASKET KIT *A = Set of gaskets*	1	-
1	503748705	CRANKSHAFT ASSY -	1	-
2	586798401	CLUTCH ASSY -	1	-
3	503779101	SLEEVE -	1	-
4	503263019	O-RING -	1	-
5	585975001	BALL BEARING -	2	-
6	577572401	NEEDLE BEARING -	1	-
1	503627807	CYLINDER COVER ASSY *Std*	1	-
1	503627808	CYLINDER COVER ASSY *Hd*	1	-
2	503987401	LABEL -	1	-
3	525887001	SCREW CITXPANMO -	3	-
4	503817701	FILTER COVER *Hd*	1	-
4	503628001	FILTER COVER *Std*	1	-
5	503740102	SNAP LOCKING -	2	-
6	537016501	SUPPORT -	1	-
7	537055903	SLEEVE -	3	-
1	503939372	CYLINDER ASSY *EPA*	1	-
1	503626473	CYLINDER ASSY -	1	-
2	503939271	PISTON ASSY *EPA*	1	-
2	503691271	PISTON ASSY -	1	-
3	503552201	PLUG -	1	-

Ref.	Article N.	Description	Qty	Kit
4	577572401	NEEDLE BEARING -	1	-
5	503715301	DECOMPRESSION VALVE -	1	-
6	525824903	SCREW ITXSCM -	4	-
7	503235111	SPARK PLUG *BPMR7A*	1	-
8	503961501	GASKET -	1	-
9	503289036	PISTON RING *EPA*	2	-
9	503289042	PISTON RING -	1	-
10	737431200	SNAP RING -	2	-
11	503775901	GASKET -	1	-
12	503775802	HEAT DEFLECTOR -	1	-
13	503647201	GASKET KIT *A = Set of gaskets*	1	-
1	544114013	FUEL TANK -	1	-
2	581756106	FUEL HOSE -	1	-
3	537099301	CONNECTION BEND *From serial number 20061200001 - 20184700378*	1	-
4	503600401	FILTER PLUG *Up to serial number - 20061199999*	1	-
4	537092201	TANK VENT ASSY *From serial number 20061200001 - 20184700378*	1	-
4	501873101	TANK VENT ASSY *Up to serial number - 20061199999*	1	-
4	501152901	TANK VENT ASSY *From serial number 20184700379 -*	1	-
5	503717601	THROTTLE CABLE ASSY -	1	-
6	720124020	PARALLEL PIN -	1	-
7	503556601	THROTTLE LOCKOUT -	1	-
8	503736401	SPRING	1	-

Ref.	Article N.	Description	Qty	Kit
		-		
9	503829801	TRIGGER -	1	-
10	720127220	PARALLEL PIN -	1	-
11	503895601	ANTIVIBRATION ELEMENT *Std*	1	-
11	503895602	ANTIVIBRATION ELEMENT *Hard*	1	-
12	537215207	TANK CAP ASSY -	1	-
13	503578901	HOLDER -	1	-
14	589241101	GASKET -	1	-
15	581756202	FUEL HOSE -	1	-
16	503443201	FUEL FILTER -	1	-
17	503637603	ANTIVIBRATION ELEMENT *Std*	1	-
17	503637604	ANTIVIBRATION ELEMENT *Hard*	1	-
1	503628602	HANDLE *WRAP G No screws or antivibration element included.*	1	-
1	503628671	HANDLE *WRAP*	1	-
2	586443001	SCREW ITXSCFT -	5	-
3	586440001	SCREW ITXSCFT -	1	-
4	503684504	ANTIVIBRATION ELEMENT *WRAP G*	1	-
4	503637504	ANTIVIBRATION ELEMENT *Wrap*	1	-
5	537017201	SPIKE -	1	-
1	503626771	FRONT HANDLE ASSY -	1	-
2	586443001	SCREW ITXSCFT -	4	-
3	586440001	SCREW ITXSCFT -	1	-

Ref.	Article N.	Description	Qty	Kit
4	503637505	ANTIVIBRATION ELEMENT *Hard*	1	-
4	503637504	ANTIVIBRATION ELEMENT *Std*	1	-
1	503640201	SWITCH -	1	-
3	501430001	CABLE GROMMET -	1	-
4	501802403	STATOR ASSY -	1	-
5	586438502	SCREW ITXSCM -	3	-
6	503220401	NUT -	1	-
7	537051604	FLYWHEEL ASSY -	1	-
8	501673501	SPRING -	2	-
9	503230042	WASHER -	2	-
10	537015501	STARTER PAWL -	2	-
11	506006901	SCREW -	2	-
12	586505401	SCREW ITXCSRT -	2	-
13	503705901	HEATING PLATE -	1	-
14	503626772	FRONT HANDLE ASSY *G*	1	-
15	586443001	SCREW ITXSCFT -	4	-
16	586440001	SCREW ITXSCFT -	1	-
17	503684504	ANTIVIBRATION ELEMENT *G*	1	-
1	501485402	SPARK PLUG CAP -	1	-
2	586880304	IGNITION MODULE -	1	-
3	582029701	SCREW ITXSCM -	2	-
4	503718201	SWITCH	1	-

Ref.	Article N.	Description	Qty	Kit
		-		
5	503626101	CABLE -	1	-
6	503897601	CABLE -	1	-
7	525887402	SCREW CITXPANT -	1	-
8	503221011	HEXAGON NUT -	1	-
9	537051605	FLYWHEEL ASSY -	1	-
10	501673501	SPRING -	2	-
11	503230042	WASHER -	2	-
12	537015501	STARTER PAWL -	2	-
13	506006901	SCREW -	2	-
14	503230101	WASHER -	1	-
1	544029702	MUFFLER ASSY *DF*	1	-
2	724128759	SCREW CRPANM -	1	-
3	503766402	SPARK ARRESTER SCREEN -	1	-
4	525825101	SCREW ITXSCM -	2	-
5	579025901	SUPPORT -	1	-
6	503200774	SCREW IHSCFM -	2	-
7	503200702	SCREW IHSCFM -	2	-
8	544029501	MUFFLER ASSY *Tube*	1	-
8	544029502	MUFFLER ASSY *Jungle*	1	-
1	503628171	STARTER ASSY	1	-
2	586443101	SCREW ITXSCFT	1	-
3	503859601	STARTER PULLEY	1	-

Ref.	Article N.	Description	Qty	Kit
4	522037301	STARTER HANDLE	1	-
5	503432902	STARTER ROPE	1	-
6	537283602	RECOIL SPRING	1	-
7	503628202	STARTER HOUSING	1	-
8	537086701	BUSHING	1	-
9	501630601	SLEEVE	1	-
10	525824501	SCREW CITXPANMO	4	-
11	537230201	LABEL *XP*	1	-
11	537230206	LABEL *XPG*	1	-
12	503628301	AIR CONDUCTOR	1	-
2	537060401	RETAINER -	1	-
3	537189801	THERMOSTAT ASSY -	1	-
4	503554901	SWITCH -	1	-
5	537071402	FOIL ELEMENT -	1	-
7	537071802	STATOR ASSY -	1	-
8	586438502	SCREW ITXSCM -	3	-
9	503220401	NUT -	1	-
10	537051606	FLYWHEEL ASSY -	1	-
11	501673501	SPRING -	2	-
12	503230042	WASHER -	2	-
13	537015501	STARTER PAWL -	2	-
14	506006901	SCREW -	2	-
15	501430001	CABLE GROMMET -	1	-
16	503213801	SCREW CRCSRT -	2	-
17	503705901	HEATING PLATE -	1	-

Ref.	Article N.	Description	Qty	Kit
18	503626772	FRONT HANDLE ASSY *G*	1	-
19	503214972	SCREW IHSCFT -	4	-
20	586440001	SCREW ITXSCFT -	1	-
21	503684504	ANTIVIBRATION ELEMENT *G*	1	-

CARBURETOR AND AIR FILTER

G 372
CARBURETOR & AIR FILTER

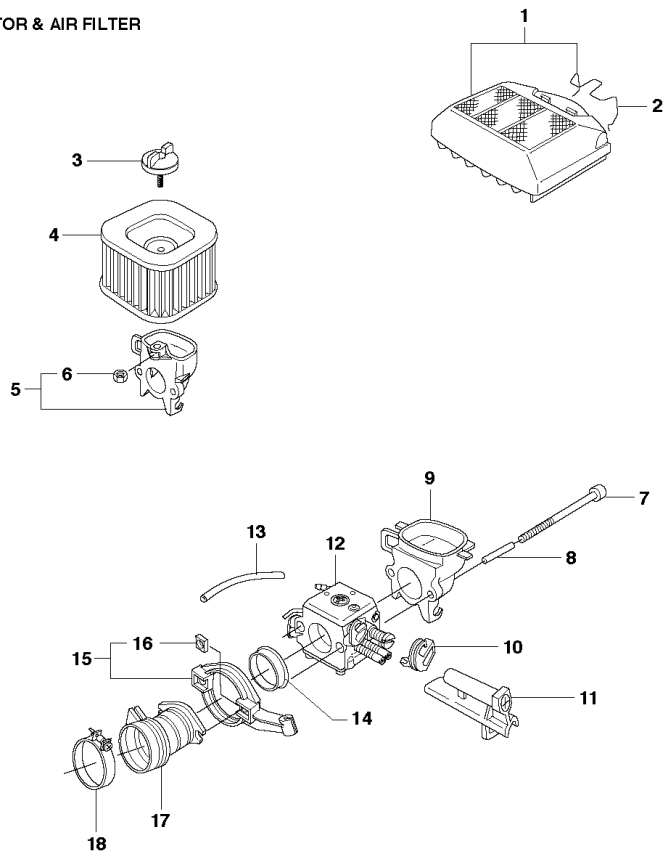

Ref.	Article N.	Description	Qty	Kit
1	588797401	TOOL -	1	-
2	501691701	COMBINATION WRENCH -	1	-
3	503558602	SPANNER *NV5*	1	-

Ref.	Article N.	Description	Qty	Kit
4	503558601	SPANNER *NV4*	1	-
5	503621201	GREASE -	1	-
6	501911401	GREASE GUN -	1	-
7	503969011	WINTER KIT *WINTER*	1	-
8	586505201	SCREW CITXPANT -	1	-
9	575880701	WRENCH *TORX T27/T20*	1	-
1	575269101	AIR FILTER ASSY *80µ*	1	-
1	575269103	AIR FILTER ASSY *Felt*	1	-
1	575269102	AIR FILTER ASSY *44µ*	1	-
2	503735401	CLAMP	1	-
3	537213204	KNOB	1	-
4	503818004	AIR FILTER *Felt*	1	-
4	503818005	AIR FILTER *80µ*	1	-
4	503818006	AIR FILTER *44µ*	1	-
5	503817801	FILTER HOLDER	1	-
6	731231401	HEXAGON NUT	1	-
7	581143001	SCREW ITXSCM	2	-
8	503701101	TUBE	2	-
9	503627502	FILTER HOLDER	1	-
10	503684101	LEVER	1	-
11	503667401	GUIDE BUSHING *Walbro HD-12B*	1	-
11	503665301	GUIDE BUSHING *Walbro HD-6B & HD-12C*	1	-
12	536033701	CARBURETTOR	1	-
13	503400606	IMPULSE HOSE	1	-
14	503431801	SUPPORT SLEEVE	1	-
15	503712701	FLANGE	1	-
16	503226503	SQUARE NUT	2	-

Ref.	Article N.	Description	Qty	Kit
17	503964501	INLET PIPE	1	-
17	503964502	INLET PIPE *For cold conditions*	1	-
18	505283309	HOSE CLAMP	1	-
1	536033701	CARBURETTOR	1	-
2	503647801	REPAIR KIT	1	-
3	501666101	SCREEN	1	-
4	503574201	PLUG	1	-
5	503563401	NEEDLE VALVE	1	-
6	501668301	LEVER	1	-
7	505520125	PIN	1	-
1	525755201	SCREW ITXSCFM -	4	-
2	503751103	HUB CAP -	1	-
3	525887402	SCREW CITXPANT -	1	-
4	501875303	KNEE JOINT -	1	-
5	586438501	SCREW ITXSCM -	1	-
6	503764903	HAND GUARD -	1	-
7	503436501	POSITION SPRING -	1	-
8	503838102	LOCK -	1	-
9	537008701	BRAKE LEVER -	1	-
10	503775201	BUSHING -	1	-
11	503709902	BRAKE SPRING -	1	-
12	503792702	SUPPORT -	1	-
13	503752202	BRAKE BAND ASSY -	1	-
14	537033501	CLUTCH COVER ASSY -	1	-
15	537033571	CLUTCH COVER ASSY -	1	-
16	537033803	LABEL	1	-

Ref.	Article N.	Description	Qty	Kit
		-		
17	503762902	CHIP GUARD -	1	-
18	503897001	SLEEVE -	1	-
19	525887402	SCREW CITXPANT -	1	-
20	525887402	SCREW CITXPANT -	2	-
21	537044102	CHAIN TENSIONER -	1	-
22	537016801	COVER -	1	-
23	503230066	WASHER -	1	-
24	537079502	WORM SCREW -	1	-
25	503998301	PAWL -	1	-
26	537017401	BEARING SLEEVE -	1	-
27	537079402	WORM WHEEL -	1	-
28	503230063	WASHER -	1	-
29	740480702	O-RING -	1	-
30	501517201	CHAIN GUIDE -	1	-
31	503220001	HEXAGON NUT -	2	-
31	503220010	NUT *30 pcs, plastic bag of 503220001*	1	-
32	525887402	SCREW CITXPANT -	1	-
33	503922701	SPIKE *372 WRAP*	1	-
34	503719701	SPIKE -	1	-
1	503521303	OIL PUMP ASSY -	1	-
2	503624901	SEALING PLUG -	1	-

Ref.	Article N.	Description	Qty	Kit
3	503521501	PUMP PISTON -	1	-
4	503230004	WASHER -	2	-
5	501615801	SPRING -	1	-
6	503813001	SPRING -	1	-
7	503811301	SCREW -	1	-
8	525824912	SCREW ITXSCM -	2	-
9	537207807	PUMP PINION -	1	-
10	503774301	OIL PIPE -	1	-
11	503644701	BUSHING *Up to serial number 20182009999*	1	-
11	587291801	OIL PRESSURE HOSE *From serial number 20182100001*	1	-
12	504300026	SEALING -	1	-
13	503426701	OIL HOSE -	1	-
14	501544102	OIL SCREEN -	1	-
15	503272101	E-CLIP -	1	-
16	503752401	WASHER -	1	-
17	586980602	CLUTCH DRUM ASSY *3/8x8T*	1	-
17	586980601	CLUTCH DRUM ASSY *3/8x7T*	1	-
18	501598002	RIM SPROCKET *3/8x7T*	1	-
18	505303661	RIM SPROCKET *3/8x8T*	1	-
19	503432001	NEEDLE HOLDER *3/8*	1	-
20	586798401	CLUTCH ASSY -	1	-
21	537360601	CLUTCH SPRING	3	-

Ref.	Article N.	Description	Qty	Kit
		-		
22	503230059	WASHER -	1	-
1	503626819	CRANKCASE ASSY -	1	-
2	503967001	BUSHING -	1	-
3	503260301	SEALING RING -	1	-
4	503751801	PIN -	1	-
5	501270801	GUIDE BUSHING -	1	-
6	501270801	GUIDE BUSHING -	1	-
7	537051301	BAR BOLT -	2	-
8	525887402	SCREW CITXPANT -	1	-
9	537013702	CHAIN GUIDE PLATE *From serial number 20182100001*	1	-
9	537046601	KIT *Up to serial number 20182009999*	1	-
10	586445401	SCREW ITXSCM -	1	-
11	525755201	SCREW ITXSCFM -	4	-
12	588093701	CARBURETTOR AREA BASE -	1	-
13	503734401	GROMMET -	1	-
14	503627701	CHOKE CONTROL -	1	-
15	579468901	SUPPORT -	1	-
16	537095401	GROMMET -	1	-
17	525824913	SCREW ITXSCM -	2	-
18	501686801	CHAIN CATCHER -	1	-
19	503627201	GASKET -	1	-

Ref.	Article N.	Description	Qty	Kit
20	503857301	COVER -	1	-
21	505275719	SEALING RING -	1	-
22	503628401	AIR NOZZLE -	1	-
23	525755201	SCREW ITXSCFM -	1	-
24	503846101	BUFFER -	1	-
25	537215207	TANK CAP ASSY -	1	-
26	503578901	HOLDER -	1	-
27	589241101	GASKET -	1	-
28	575791202	SCREW ITXSCM -	6	-
29	537403501	FILTER -	1	-
30	530026119	CHECK VALVE -	1	-
31	537042901	BUMPER -	1	-
32	525755103	SCREW ITXSCFM -	1	-
33	537024401	WEAR PROTECTION -	1	-
34	537089201	CHAIN CATCHER -	1	-
35	575793501	SCREW ITXPANM -	2	-
36	537017101	SPIKE -	1	-
37	503222401	LOCK NUT -	1	-
38	503647902	SPIKE -	1	-
39	503647201	GASKET KIT *A = Set of gaskets*	1	-
1	503748705	CRANKSHAFT ASSY -	1	-
2	586798401	CLUTCH ASSY	1	-

Ref.	Article N.	Description	Qty	Kit
		-		
3	503779101	SLEEVE -	1	-
4	503263019	O-RING -	1	-
5	585975001	BALL BEARING -	2	-
6	577572401	NEEDLE BEARING -	1	-
1	503627807	CYLINDER COVER ASSY *Std*	1	-
1	503627808	CYLINDER COVER ASSY *Hd*	1	-
2	503987401	LABEL -	1	-
3	525887001	SCREW CITXPANMO -	3	-
4	503817701	FILTER COVER *Hd*	1	-
4	503628001	FILTER COVER *Std*	1	-
5	503740102	SNAP LOCKING -	2	-
6	537016501	SUPPORT -	1	-
7	537055903	SLEEVE -	3	-
1	503939372	CYLINDER ASSY *EPA*	1	-
1	503626473	CYLINDER ASSY -	1	-
2	503939271	PISTON ASSY *EPA*	1	-
2	503691271	PISTON ASSY -	1	-
3	503552201	PLUG -	1	-
4	577572401	NEEDLE BEARING -	1	-
5	503715301	DECOMPRESSION VALVE -	1	-
6	525824903	SCREW ITXSCM -	4	-

Ref.	Article N.	Description	Qty	Kit
7	503235111	SPARK PLUG *BPMR7A*	1	-
8	503961501	GASKET -	1	-
9	503289036	PISTON RING *EPA*	2	-
9	503289042	PISTON RING -	1	-
10	737431200	SNAP RING -	2	-
11	503775901	GASKET -	1	-
12	503775802	HEAT DEFLECTOR -	1	-
13	503647201	GASKET KIT *A = Set of gaskets*	1	-
1	544114013	FUEL TANK -	1	-
2	581756106	FUEL HOSE -	1	-
3	537099301	CONNECTION BEND *From serial number 20061200001 - 20184700378*	1	-
4	503600401	FILTER PLUG *Up to serial number - 20061199999*	1	-
4	537092201	TANK VENT ASSY *From serial number 20061200001 - 20184700378*	1	-
4	501873101	TANK VENT ASSY *Up to serial number - 20061199999*	1	-
4	501152901	TANK VENT ASSY *From serial number 20184700379 -*	1	-
5	503717601	THROTTLE CABLE ASSY -	1	-
6	720124020	PARALLEL PIN -	1	-
7	503556601	THROTTLE LOCKOUT -	1	-
8	503736401	SPRING -	1	-
9	503829801	TRIGGER -	1	-
10	720127220	PARALLEL PIN -	1	-
11	503895601	ANTIVIBRATION ELEMENT	1	-

Ref.	Article N.	Description	Qty	Kit
		Std		
11	503895602	ANTIVIBRATION ELEMENT *Hard*	1	-
12	537215207	TANK CAP ASSY -	1	-
13	503578901	HOLDER -	1	-
14	589241101	GASKET -	1	-
15	581756202	FUEL HOSE -	1	-
16	503443201	FUEL FILTER -	1	-
17	503637603	ANTIVIBRATION ELEMENT *Std*	1	-
17	503637604	ANTIVIBRATION ELEMENT *Hard*	1	-
1	503628602	HANDLE *WRAP G No screws or antivibration element included.*	1	-
1	503628671	HANDLE *WRAP*	1	-
2	586443001	SCREW ITXSCFT -	5	-
3	586440001	SCREW ITXSCFT -	1	-
4	503684504	ANTIVIBRATION ELEMENT *WRAP G*	1	-
4	503637504	ANTIVIBRATION ELEMENT *Wrap*	1	-
5	537017201	SPIKE -	1	-
1	503626771	FRONT HANDLE ASSY -	1	-
2	586443001	SCREW ITXSCFT -	4	-
3	586440001	SCREW ITXSCFT -	1	-
4	503637505	ANTIVIBRATION ELEMENT *Hard*	1	-
4	503637504	ANTIVIBRATION ELEMENT *Std*	1	-
1	503640201	SWITCH -	1	-

Ref.	Article N.	Description	Qty	Kit
3	501430001	CABLE GROMMET -	1	-
4	501802403	STATOR ASSY -	1	-
5	586438502	SCREW ITXSCM -	3	-
6	503220401	NUT -	1	-
7	537051604	FLYWHEEL ASSY -	1	-
8	501673501	SPRING -	2	-
9	503230042	WASHER -	2	-
10	537015501	STARTER PAWL -	2	-
11	506006901	SCREW -	2	-
12	586505401	SCREW ITXCSRT -	2	-
13	503705901	HEATING PLATE -	1	-
14	503626772	FRONT HANDLE ASSY *G*	1	-
15	586443001	SCREW ITXSCFT -	4	-
16	586440001	SCREW ITXSCFT -	1	-
17	503684504	ANTIVIBRATION ELEMENT *G*	1	-
1	501485402	SPARK PLUG CAP -	1	-
2	586880304	IGNITION MODULE -	1	-
3	582029701	SCREW ITXSCM -	2	-
4	503718201	SWITCH -	1	-
5	503626101	CABLE -	1	-
6	503897601	CABLE -	1	-
7	525887402	SCREW CITXPANT	1	-

Ref.	Article N.	Description	Qty	Kit
		-		
8	503221011	HEXAGON NUT -	1	-
9	537051605	FLYWHEEL ASSY -	1	-
10	501673501	SPRING -	2	-
11	503230042	WASHER -	2	-
12	537015501	STARTER PAWL -	2	-
13	506006901	SCREW -	2	-
14	503230101	WASHER -	1	-
1	544029702	MUFFLER ASSY *DF*	1	-
2	724128759	SCREW CRPANM -	1	-
3	503766402	SPARK ARRESTER SCREEN -	1	-
4	525825101	SCREW ITXSCM -	2	-
5	579025901	SUPPORT -	1	-
6	503200774	SCREW IHSCFM -	2	-
7	503200702	SCREW IHSCFM -	2	-
8	544029501	MUFFLER ASSY *Tube*	1	-
8	544029502	MUFFLER ASSY *Jungle*	1	-
1	503628171	STARTER ASSY	1	-
2	586443101	SCREW ITXSCFT	1	-
3	503859601	STARTER PULLEY	1	-
4	522037301	STARTER HANDLE	1	-
5	503432902	STARTER ROPE	1	-
6	537283602	RECOIL SPRING	1	-
7	503628202	STARTER HOUSING	1	-
8	537086701	BUSHING	1	-
9	501630601	SLEEVE	1	-

Ref.	Article N.	Description	Qty	Kit
10	525824501	SCREW CITXPANMO	4	-
11	537230201	LABEL *XP*	1	-
11	537230206	LABEL *XPG*	1	-
12	503628301	AIR CONDUCTOR	1	-
2	537060401	RETAINER -	1	-
3	537189801	THERMOSTAT ASSY -	1	-
4	503554901	SWITCH -	1	-
5	537071402	FOIL ELEMENT -	1	-
7	537071802	STATOR ASSY -	1	-
8	586438502	SCREW ITXSCM -	3	-
9	503220401	NUT -	1	-
10	537051606	FLYWHEEL ASSY -	1	-
11	501673501	SPRING -	2	-
12	503230042	WASHER -	2	-
13	537015501	STARTER PAWL -	2	-
14	506006901	SCREW -	2	-
15	501430001	CABLE GROMMET -	1	-
16	503213801	SCREW CRCSRT -	2	-
17	503705901	HEATING PLATE -	1	-
18	503626772	FRONT HANDLE ASSY *G*	1	-
19	503214972	SCREW IHSCFT -	4	-
20	586440001	SCREW ITXSCFT -	1	-
21	503684504	ANTIVIBRATION ELEMENT	1	-

Ref.	Article N.	Description	Qty	Kit
		G		

CARBURETOR

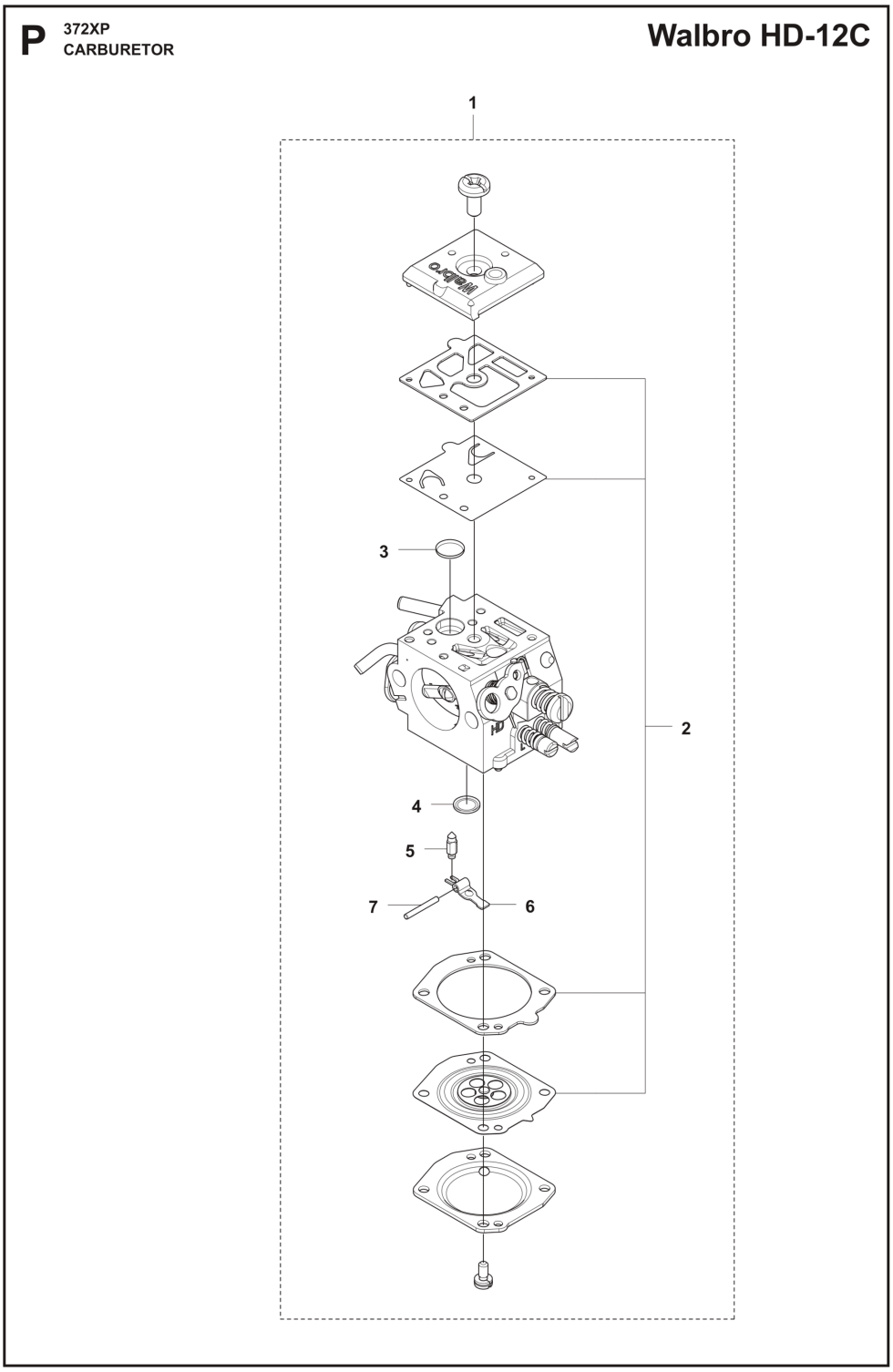

Ref.	Article N.	Description	Qty	Kit
1	588797401	TOOL -	1	-
2	501691701	COMBINATION WRENCH -	1	-
3	503558602	SPANNER *NV5*	1	-
4	503558601	SPANNER *NV4*	1	-
5	503621201	GREASE -	1	-
6	501911401	GREASE GUN -	1	-
7	503969011	WINTER KIT *WINTER*	1	-
8	586505201	SCREW CITXPANT -	1	-
9	575880701	WRENCH *TORX T27/T20*	1	-
1	575269101	AIR FILTER ASSY *80µ*	1	-
1	575269103	AIR FILTER ASSY *Felt*	1	-
1	575269102	AIR FILTER ASSY *44µ*	1	-
2	503735401	CLAMP	1	-
3	537213204	KNOB	1	-
4	503818004	AIR FILTER *Felt*	1	-
4	503818005	AIR FILTER *80µ*	1	-
4	503818006	AIR FILTER *44µ*	1	-
5	503817801	FILTER HOLDER	1	-
6	731231401	HEXAGON NUT	1	-
7	581143001	SCREW ITXSCM	2	-
8	503701101	TUBE	2	-
9	503627502	FILTER HOLDER	1	-
10	503684101	LEVER	1	-
11	503667401	GUIDE BUSHING *Walbro HD-12B*	1	-
11	503665301	GUIDE BUSHING *Walbro HD-6B & HD-12C*	1	-

Ref.	Article N.	Description	Qty	Kit
12	536033701	CARBURETTOR	1	-
13	503400606	IMPULSE HOSE	1	-
14	503431801	SUPPORT SLEEVE	1	-
15	503712701	FLANGE	1	-
16	503226503	SQUARE NUT	2	-
17	503964501	INLET PIPE	1	-
17	503964502	INLET PIPE *For cold conditions*	1	-
18	505283309	HOSE CLAMP	1	-
1	536033701	CARBURETTOR	1	-
2	503647801	REPAIR KIT	1	-
3	501666101	SCREEN	1	-
4	503574201	PLUG	1	-
5	503563401	NEEDLE VALVE	1	-
6	501668301	LEVER	1	-
7	505520125	PIN	1	-
1	525755201	SCREW ITXSCFM -	4	-
2	503751103	HUB CAP -	1	-
3	525887402	SCREW CITXPANT -	1	-
4	501875303	KNEE JOINT -	1	-
5	586438501	SCREW ITXSCM -	1	-
6	503764903	HAND GUARD -	1	-
7	503436501	POSITION SPRING -	1	-
8	503838102	LOCK -	1	-
9	537008701	BRAKE LEVER -	1	-
10	503775201	BUSHING -	1	-
11	503709902	BRAKE SPRING -	1	-
12	503792702	SUPPORT -	1	-
13	503752202	BRAKE BAND ASSY	1	-

Ref.	Article N.	Description	Qty	Kit
		-		
14	537033501	CLUTCH COVER ASSY -	1	-
15	537033571	CLUTCH COVER ASSY -	1	-
16	537033803	LABEL -	1	-
17	503762902	CHIP GUARD -	1	-
18	503897001	SLEEVE -	1	-
19	525887402	SCREW CITXPANT -	1	-
20	525887402	SCREW CITXPANT -	2	-
21	537044102	CHAIN TENSIONER -	1	-
22	537016801	COVER -	1	-
23	503230066	WASHER -	1	-
24	537079502	WORM SCREW -	1	-
25	503998301	PAWL -	1	-
26	537017401	BEARING SLEEVE -	1	-
27	537079402	WORM WHEEL -	1	-
28	503230063	WASHER -	1	-
29	740480702	O-RING -	1	-
30	501517201	CHAIN GUIDE -	1	-
31	503220001	HEXAGON NUT -	2	-
31	503220010	NUT *30 pcs, plastic bag of 503220001*	1	-
32	525887402	SCREW CITXPANT -	1	-
33	503922701	SPIKE *372 WRAP*	1	-

Ref.	Article N.	Description	Qty	Kit
34	503719701	SPIKE -	1	-
1	503521303	OIL PUMP ASSY -	1	-
2	503624901	SEALING PLUG -	1	-
3	503521501	PUMP PISTON -	1	-
4	503230004	WASHER -	2	-
5	501615801	SPRING -	1	-
6	503813001	SPRING -	1	-
7	503811301	SCREW -	1	-
8	525824912	SCREW ITXSCM -	2	-
9	537207807	PUMP PINION -	1	-
10	503774301	OIL PIPE -	1	-
11	503644701	BUSHING *Up to serial number 20182009999*	1	-
11	587291801	OIL PRESSURE HOSE *From serial number 20182100001*	1	-
12	504300026	SEALING -	1	-
13	503426701	OIL HOSE -	1	-
14	501544102	OIL SCREEN -	1	-
15	503272101	E-CLIP -	1	-
16	503752401	WASHER -	1	-
17	586980602	CLUTCH DRUM ASSY *3/8x8T*	1	-
17	586980601	CLUTCH DRUM ASSY *3/8x7T*	1	-
18	501598002	RIM SPROCKET *3/8x7T*	1	-
18	505303661	RIM SPROCKET	1	-

Ref.	Article N.	Description	Qty	Kit
		3/8x8T		
19	503432001	NEEDLE HOLDER *3/8*	1	-
20	586798401	CLUTCH ASSY -	1	-
21	537360601	CLUTCH SPRING -	3	-
22	503230059	WASHER -	1	-
1	503626819	CRANKCASE ASSY -	1	-
2	503967001	BUSHING -	1	-
3	503260301	SEALING RING -	1	-
4	503751801	PIN -	1	-
5	501270801	GUIDE BUSHING -	1	-
6	501270801	GUIDE BUSHING -	1	-
7	537051301	BAR BOLT -	2	-
8	525887402	SCREW CITXPANT -	1	-
9	537013702	CHAIN GUIDE PLATE *From serial number 20182100001*	1	-
9	537046601	KIT *Up to serial number 20182009999*	1	-
10	586445401	SCREW ITXSCM -	1	-
11	525755201	SCREW ITXSCFM -	4	-
12	588093701	CARBURETTOR AREA BASE -	1	-
13	503734401	GROMMET -	1	-
14	503627701	CHOKE CONTROL -	1	-
15	579468901	SUPPORT -	1	-
16	537095401	GROMMET -	1	-

Ref.	Article N.	Description	Qty	Kit
17	525824913	SCREW ITXSCM -	2	-
18	501686801	CHAIN CATCHER -	1	-
19	503627201	GASKET -	1	-
20	503857301	COVER -	1	-
21	505275719	SEALING RING -	1	-
22	503628401	AIR NOZZLE -	1	-
23	525755201	SCREW ITXSCFM -	1	-
24	503846101	BUFFER -	1	-
25	537215207	TANK CAP ASSY -	1	-
26	503578901	HOLDER -	1	-
27	589241101	GASKET -	1	-
28	575791202	SCREW ITXSCM -	6	-
29	537403501	FILTER -	1	-
30	530026119	CHECK VALVE -	1	-
31	537042901	BUMPER -	1	-
32	525755103	SCREW ITXSCFM -	1	-
33	537024401	WEAR PROTECTION -	1	-
34	537089201	CHAIN CATCHER -	1	-
35	575793501	SCREW ITXPANM -	2	-
36	537017101	SPIKE -	1	-
37	503222401	LOCK NUT -	1	-
38	503647902	SPIKE	1	-

Ref.	Article N.	Description	Qty	Kit
		-		
39	503647201	GASKET KIT *A = Set of gaskets*	1	-
1	503748705	CRANKSHAFT ASSY -	1	-
2	586798401	CLUTCH ASSY -	1	-
3	503779101	SLEEVE -	1	-
4	503263019	O-RING -	1	-
5	585975001	BALL BEARING -	2	-
6	577572401	NEEDLE BEARING -	1	-
1	503627807	CYLINDER COVER ASSY *Std*	1	-
1	503627808	CYLINDER COVER ASSY *Hd*	1	-
2	503987401	LABEL -	1	-
3	525887001	SCREW CITXPANMO -	3	-
4	503817701	FILTER COVER *Hd*	1	-
4	503628001	FILTER COVER *Std*	1	-
5	503740102	SNAP LOCKING -	2	-
6	537016501	SUPPORT -	1	-
7	537055903	SLEEVE -	3	-
1	503939372	CYLINDER ASSY *EPA*	1	-
1	503626473	CYLINDER ASSY -	1	-
2	503939271	PISTON ASSY *EPA*	1	-
2	503691271	PISTON ASSY -	1	-
3	503552201	PLUG -	1	-

Ref.	Article N.	Description	Qty	Kit
4	577572401	NEEDLE BEARING -	1	-
5	503715301	DECOMPRESSION VALVE -	1	-
6	525824903	SCREW ITXSCM -	4	-
7	503235111	SPARK PLUG *BPMR7A*	1	-
8	503961501	GASKET -	1	-
9	503289036	PISTON RING *EPA*	2	-
9	503289042	PISTON RING -	1	-
10	737431200	SNAP RING -	2	-
11	503775901	GASKET -	1	-
12	503775802	HEAT DEFLECTOR -	1	-
13	503647201	GASKET KIT *A = Set of gaskets*	1	-
1	544114013	FUEL TANK -	1	-
2	581756106	FUEL HOSE -	1	-
3	537099301	CONNECTION BEND *From serial number 20061200001 - 20184700378*	1	-
4	503600401	FILTER PLUG *Up to serial number - 20061199999*	1	-
4	537092201	TANK VENT ASSY *From serial number 20061200001 - 20184700378*	1	-
4	501873101	TANK VENT ASSY *Up to serial number - 20061199999*	1	-
4	501152901	TANK VENT ASSY *From serial number 20184700379 -*	1	-
5	503717601	THROTTLE CABLE ASSY -	1	-
6	720124020	PARALLEL PIN -	1	-
7	503556601	THROTTLE LOCKOUT -	1	-
8	503736401	SPRING	1	-

Ref.	Article N.	Description	Qty	Kit
		-		
9	503829801	TRIGGER -	1	-
10	720127220	PARALLEL PIN -	1	-
11	503895601	ANTIVIBRATION ELEMENT *Std*	1	-
11	503895602	ANTIVIBRATION ELEMENT *Hard*	1	-
12	537215207	TANK CAP ASSY -	1	-
13	503578901	HOLDER -	1	-
14	589241101	GASKET -	1	-
15	581756202	FUEL HOSE -	1	-
16	503443201	FUEL FILTER -	1	-
17	503637603	ANTIVIBRATION ELEMENT *Std*	1	-
17	503637604	ANTIVIBRATION ELEMENT *Hard*	1	-
1	503628602	HANDLE *WRAP G No screws or antivibration element included.*	1	-
1	503628671	HANDLE *WRAP*	1	-
2	586443001	SCREW ITXSCFT -	5	-
3	586440001	SCREW ITXSCFT -	1	-
4	503684504	ANTIVIBRATION ELEMENT *WRAP G*	1	-
4	503637504	ANTIVIBRATION ELEMENT *Wrap*	1	-
5	537017201	SPIKE -	1	-
1	503626771	FRONT HANDLE ASSY -	1	-
2	586443001	SCREW ITXSCFT -	4	-
3	586440001	SCREW ITXSCFT -	1	-

Ref.	Article N.	Description	Qty	Kit
4	503637505	ANTIVIBRATION ELEMENT *Hard*	1	-
4	503637504	ANTIVIBRATION ELEMENT *Std*	1	-
1	503640201	SWITCH -	1	-
3	501430001	CABLE GROMMET -	1	-
4	501802403	STATOR ASSY -	1	-
5	586438502	SCREW ITXSCM -	3	-
6	503220401	NUT -	1	-
7	537051604	FLYWHEEL ASSY -	1	-
8	501673501	SPRING -	2	-
9	503230042	WASHER -	2	-
10	537015501	STARTER PAWL -	2	-
11	506006901	SCREW -	2	-
12	586505401	SCREW ITXCSRT -	2	-
13	503705901	HEATING PLATE -	1	-
14	503626772	FRONT HANDLE ASSY *G*	1	-
15	586443001	SCREW ITXSCFT -	4	-
16	586440001	SCREW ITXSCFT -	1	-
17	503684504	ANTIVIBRATION ELEMENT *G*	1	-
1	501485402	SPARK PLUG CAP -	1	-
2	586880304	IGNITION MODULE -	1	-
3	582029701	SCREW ITXSCM -	2	-
4	503718201	SWITCH	1	-

Ref.	Article N.	Description	Qty	Kit
		-		
5	503626101	CABLE -	1	-
6	503897601	CABLE -	1	-
7	525887402	SCREW CITXPANT -	1	-
8	503221011	HEXAGON NUT -	1	-
9	537051605	FLYWHEEL ASSY -	1	-
10	501673501	SPRING -	2	-
11	503230042	WASHER -	2	-
12	537015501	STARTER PAWL -	2	-
13	506006901	SCREW -	2	-
14	503230101	WASHER -	1	-
1	544029702	MUFFLER ASSY *DF*	1	-
2	724128759	SCREW CRPANM -	1	-
3	503766402	SPARK ARRESTER SCREEN -	1	-
4	525825101	SCREW ITXSCM -	2	-
5	579025901	SUPPORT -	1	-
6	503200774	SCREW IHSCFM -	2	-
7	503200702	SCREW IHSCFM -	2	-
8	544029501	MUFFLER ASSY *Tube*	1	-
8	544029502	MUFFLER ASSY *Jungle*	1	-
1	503628171	STARTER ASSY	1	-
2	586443101	SCREW ITXSCFT	1	-
3	503859601	STARTER PULLEY	1	-

Ref.	Article N.	Description	Qty	Kit
4	522037301	STARTER HANDLE	1	-
5	503432902	STARTER ROPE	1	-
6	537283602	RECOIL SPRING	1	-
7	503628202	STARTER HOUSING	1	-
8	537086701	BUSHING	1	-
9	501630601	SLEEVE	1	-
10	525824501	SCREW CITXPANMO	4	-
11	537230201	LABEL *XP*	1	-
11	537230206	LABEL *XPG*	1	-
12	503628301	AIR CONDUCTOR	1	-
2	537060401	RETAINER -	1	-
3	537189801	THERMOSTAT ASSY -	1	-
4	503554901	SWITCH -	1	-
5	537071402	FOIL ELEMENT -	1	-
7	537071802	STATOR ASSY -	1	-
8	586438502	SCREW ITXSCM -	3	-
9	503220401	NUT -	1	-
10	537051606	FLYWHEEL ASSY -	1	-
11	501673501	SPRING -	2	-
12	503230042	WASHER -	2	-
13	537015501	STARTER PAWL -	2	-
14	506006901	SCREW -	2	-
15	501430001	CABLE GROMMET -	1	-
16	503213801	SCREW CRCSRT -	2	-
17	503705901	HEATING PLATE -	1	-

Ref.	Article N.	Description	Qty	Kit
18	503626772	FRONT HANDLE ASSY *G*	1	-
19	503214972	SCREW IHSCFT -	4	-
20	586440001	SCREW ITXSCFT -	1	-
21	503684504	ANTIVIBRATION ELEMENT *G*	1	-

CHAIN BRAKE AND CLUTCH COVER

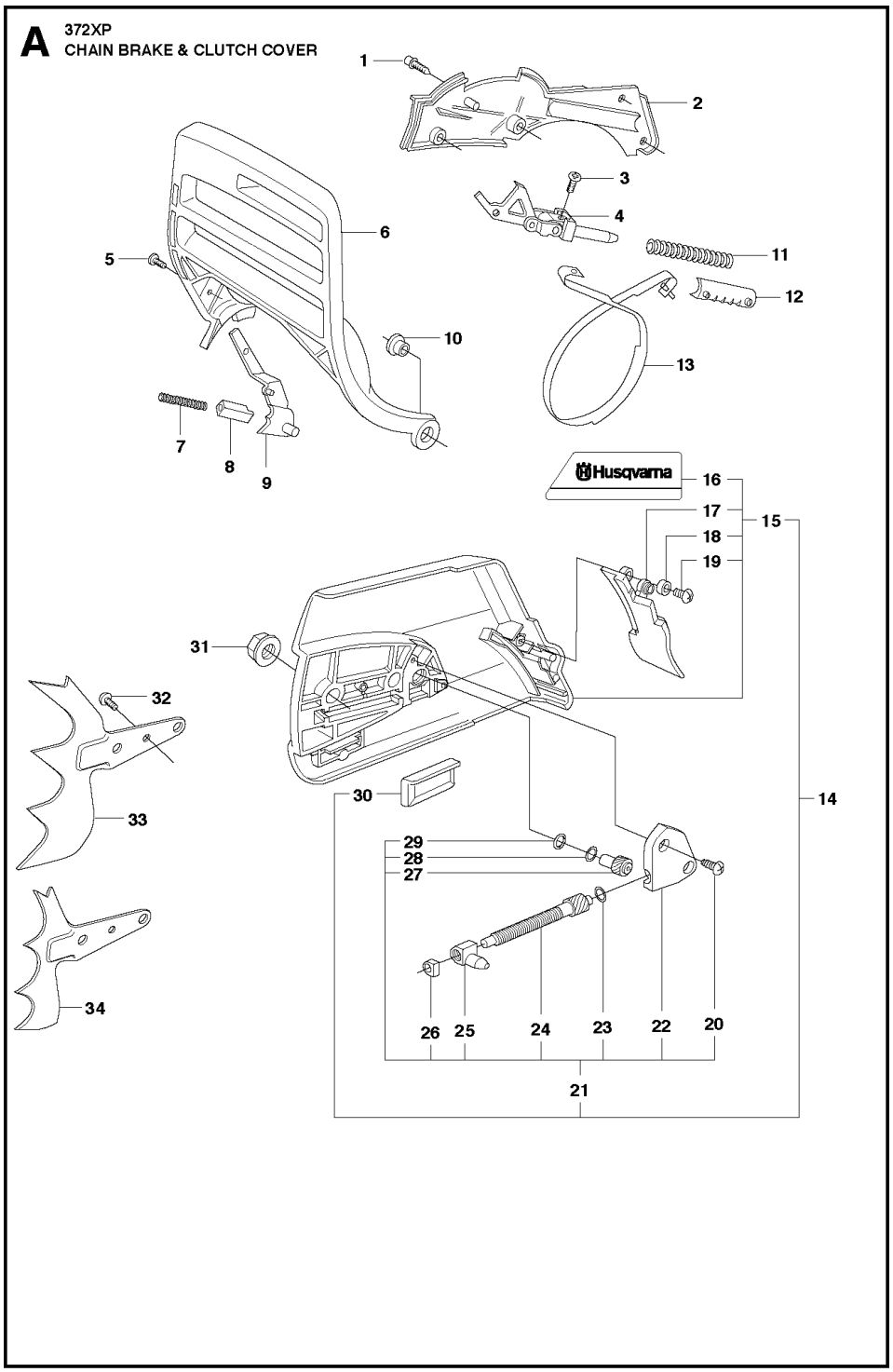

Ref.	Article N.	Description	Qty	Kit
1	588797401	TOOL -	1	-
2	501691701	COMBINATION WRENCH -	1	-
3	503558602	SPANNER *NV5*	1	-

Ref.	Article N.	Description	Qty	Kit
4	503558601	SPANNER *NV4*	1	-
5	503621201	GREASE -	1	-
6	501911401	GREASE GUN -	1	-
7	503969011	WINTER KIT *WINTER*	1	-
8	586505201	SCREW CITXPANT -	1	-
9	575880701	WRENCH *TORX T27/T20*	1	-
1	575269101	AIR FILTER ASSY *80µ*	1	-
1	575269103	AIR FILTER ASSY *Felt*	1	-
1	575269102	AIR FILTER ASSY *44µ*	1	-
2	503735401	CLAMP	1	-
3	537213204	KNOB	1	-
4	503818004	AIR FILTER *Felt*	1	-
4	503818005	AIR FILTER *80µ*	1	-
4	503818006	AIR FILTER *44µ*	1	-
5	503817801	FILTER HOLDER	1	-
6	731231401	HEXAGON NUT	1	-
7	581143001	SCREW ITXSCM	2	-
8	503701101	TUBE	2	-
9	503627502	FILTER HOLDER	1	-
10	503684101	LEVER	1	-
11	503667401	GUIDE BUSHING *Walbro HD-12B*	1	-
11	503665301	GUIDE BUSHING *Walbro HD-6B & HD-12C*	1	-
12	536033701	CARBURETTOR	1	-
13	503400606	IMPULSE HOSE	1	-
14	503431801	SUPPORT SLEEVE	1	-
15	503712701	FLANGE	1	-
16	503226503	SQUARE NUT	2	-

Ref.	Article N.	Description	Qty	Kit
17	503964501	INLET PIPE	1	-
17	503964502	INLET PIPE *For cold conditions*	1	-
18	505283309	HOSE CLAMP	1	-
1	536033701	CARBURETTOR	1	-
2	503647801	REPAIR KIT	1	-
3	501666101	SCREEN	1	-
4	503574201	PLUG	1	-
5	503563401	NEEDLE VALVE	1	-
6	501668301	LEVER	1	-
7	505520125	PIN	1	-
1	525755201	SCREW ITXSCFM -	4	-
2	503751103	HUB CAP -	1	-
3	525887402	SCREW CITXPANT -	1	-
4	501875303	KNEE JOINT -	1	-
5	586438501	SCREW ITXSCM -	1	-
6	503764903	HAND GUARD -	1	-
7	503436501	POSITION SPRING -	1	-
8	503838102	LOCK -	1	-
9	537008701	BRAKE LEVER -	1	-
10	503775201	BUSHING -	1	-
11	503709902	BRAKE SPRING -	1	-
12	503792702	SUPPORT -	1	-
13	503752202	BRAKE BAND ASSY -	1	-
14	537033501	CLUTCH COVER ASSY -	1	-
15	537033571	CLUTCH COVER ASSY -	1	-
16	537033803	LABEL	1	-

Ref.	Article N.	Description	Qty	Kit
		-		
17	503762902	CHIP GUARD -	1	-
18	503897001	SLEEVE -	1	-
19	525887402	SCREW CITXPANT -	1	-
20	525887402	SCREW CITXPANT -	2	-
21	537044102	CHAIN TENSIONER -	1	-
22	537016801	COVER -	1	-
23	503230066	WASHER -	1	-
24	537079502	WORM SCREW -	1	-
25	503998301	PAWL -	1	-
26	537017401	BEARING SLEEVE -	1	-
27	537079402	WORM WHEEL -	1	-
28	503230063	WASHER -	1	-
29	740480702	O-RING -	1	-
30	501517201	CHAIN GUIDE -	1	-
31	503220001	HEXAGON NUT -	2	-
31	503220010	NUT *30 pcs, plastic bag of 503220001*	1	-
32	525887402	SCREW CITXPANT -	1	-
33	503922701	SPIKE *372 WRAP*	1	-
34	503719701	SPIKE -	1	-
1	503521303	OIL PUMP ASSY -	1	-
2	503624901	SEALING PLUG -	1	-

Ref.	Article N.	Description	Qty	Kit
3	503521501	PUMP PISTON -	1	-
4	503230004	WASHER -	2	-
5	501615801	SPRING -	1	-
6	503813001	SPRING -	1	-
7	503811301	SCREW -	1	-
8	525824912	SCREW ITXSCM -	2	-
9	537207807	PUMP PINION -	1	-
10	503774301	OIL PIPE -	1	-
11	503644701	BUSHING *Up to serial number 20182009999*	1	-
11	587291801	OIL PRESSURE HOSE *From serial number 20182100001*	1	-
12	504300026	SEALING -	1	-
13	503426701	OIL HOSE -	1	-
14	501544102	OIL SCREEN -	1	-
15	503272101	E-CLIP -	1	-
16	503752401	WASHER -	1	-
17	586980602	CLUTCH DRUM ASSY *3/8x8T*	1	-
17	586980601	CLUTCH DRUM ASSY *3/8x7T*	1	-
18	501598002	RIM SPROCKET *3/8x7T*	1	-
18	505303661	RIM SPROCKET *3/8x8T*	1	-
19	503432001	NEEDLE HOLDER *3/8*	1	-
20	586798401	CLUTCH ASSY -	1	-
21	537360601	CLUTCH SPRING	3	-

Ref.	Article N.	Description	Qty	Kit
		-		
22	503230059	WASHER -	1	-
1	503626819	CRANKCASE ASSY -	1	-
2	503967001	BUSHING -	1	-
3	503260301	SEALING RING -	1	-
4	503751801	PIN -	1	-
5	501270801	GUIDE BUSHING -	1	-
6	501270801	GUIDE BUSHING -	1	-
7	537051301	BAR BOLT -	2	-
8	525887402	SCREW CITXPANT -	1	-
9	537013702	CHAIN GUIDE PLATE *From serial number 20182100001*	1	-
9	537046601	KIT *Up to serial number 20182009999*	1	-
10	586445401	SCREW ITXSCM -	1	-
11	525755201	SCREW ITXSCFM -	4	-
12	588093701	CARBURETTOR AREA BASE -	1	-
13	503734401	GROMMET -	1	-
14	503627701	CHOKE CONTROL -	1	-
15	579468901	SUPPORT -	1	-
16	537095401	GROMMET -	1	-
17	525824913	SCREW ITXSCM -	2	-
18	501686801	CHAIN CATCHER -	1	-
19	503627201	GASKET -	1	-

Ref.	Article N.	Description	Qty	Kit
20	503857301	COVER -	1	-
21	505275719	SEALING RING -	1	-
22	503628401	AIR NOZZLE -	1	-
23	525755201	SCREW ITXSCFM -	1	-
24	503846101	BUFFER -	1	-
25	537215207	TANK CAP ASSY -	1	-
26	503578901	HOLDER -	1	-
27	589241101	GASKET -	1	-
28	575791202	SCREW ITXSCM -	6	-
29	537403501	FILTER -	1	-
30	530026119	CHECK VALVE -	1	-
31	537042901	BUMPER -	1	-
32	525755103	SCREW ITXSCFM -	1	-
33	537024401	WEAR PROTECTION -	1	-
34	537089201	CHAIN CATCHER -	1	-
35	575793501	SCREW ITXPANM -	2	-
36	537017101	SPIKE -	1	-
37	503222401	LOCK NUT -	1	-
38	503647902	SPIKE -	1	-
39	503647201	GASKET KIT *A = Set of gaskets*	1	-
1	503748705	CRANKSHAFT ASSY -	1	-
2	586798401	CLUTCH ASSY	1	-

Ref.	Article N.	Description	Qty	Kit
		-		
3	503779101	SLEEVE -	1	-
4	503263019	O-RING -	1	-
5	585975001	BALL BEARING -	2	-
6	577572401	NEEDLE BEARING -	1	-
1	503627807	CYLINDER COVER ASSY *Std*	1	-
1	503627808	CYLINDER COVER ASSY *Hd*	1	-
2	503987401	LABEL -	1	-
3	525887001	SCREW CITXPANMO -	3	-
4	503817701	FILTER COVER *Hd*	1	-
4	503628001	FILTER COVER *Std*	1	-
5	503740102	SNAP LOCKING -	2	-
6	537016501	SUPPORT -	1	-
7	537055903	SLEEVE -	3	-
1	503939372	CYLINDER ASSY *EPA*	1	-
1	503626473	CYLINDER ASSY -	1	-
2	503939271	PISTON ASSY *EPA*	1	-
2	503691271	PISTON ASSY -	1	-
3	503552201	PLUG -	1	-
4	577572401	NEEDLE BEARING -	1	-
5	503715301	DECOMPRESSION VALVE -	1	-
6	525824903	SCREW ITXSCM -	4	-

Ref.	Article N.	Description	Qty	Kit
7	503235111	SPARK PLUG *BPMR7A*	1	-
8	503961501	GASKET -	1	-
9	503289036	PISTON RING *EPA*	2	-
9	503289042	PISTON RING -	1	-
10	737431200	SNAP RING -	2	-
11	503775901	GASKET -	1	-
12	503775802	HEAT DEFLECTOR -	1	-
13	503647201	GASKET KIT *A = Set of gaskets*	1	-
1	544114013	FUEL TANK -	1	-
2	581756106	FUEL HOSE -	1	-
3	537099301	CONNECTION BEND *From serial number 20061200001 - 20184700378*	1	-
4	503600401	FILTER PLUG *Up to serial number - 20061199999*	1	-
4	537092201	TANK VENT ASSY *From serial number 20061200001 - 20184700378*	1	-
4	501873101	TANK VENT ASSY *Up to serial number - 20061199999*	1	-
4	501152901	TANK VENT ASSY *From serial number 20184700379 -*	1	-
5	503717601	THROTTLE CABLE ASSY -	1	-
6	720124020	PARALLEL PIN -	1	-
7	503556601	THROTTLE LOCKOUT -	1	-
8	503736401	SPRING -	1	-
9	503829801	TRIGGER -	1	-
10	720127220	PARALLEL PIN -	1	-
11	503895601	ANTIVIBRATION ELEMENT	1	-

Ref.	Article N.	Description	Qty	Kit
		Std		
11	503895602	ANTIVIBRATION ELEMENT *Hard*	1	-
12	537215207	TANK CAP ASSY -	1	-
13	503578901	HOLDER -	1	-
14	589241101	GASKET -	1	-
15	581756202	FUEL HOSE -	1	-
16	503443201	FUEL FILTER -	1	-
17	503637603	ANTIVIBRATION ELEMENT *Std*	1	-
17	503637604	ANTIVIBRATION ELEMENT *Hard*	1	-
1	503628602	HANDLE *WRAP G No screws or antivibration element included.*	1	-
1	503628671	HANDLE *WRAP*	1	-
2	586443001	SCREW ITXSCFT -	5	-
3	586440001	SCREW ITXSCFT -	1	-
4	503684504	ANTIVIBRATION ELEMENT *WRAP G*	1	-
4	503637504	ANTIVIBRATION ELEMENT *Wrap*	1	-
5	537017201	SPIKE -	1	-
1	503626771	FRONT HANDLE ASSY -	1	-
2	586443001	SCREW ITXSCFT -	4	-
3	586440001	SCREW ITXSCFT -	1	-
4	503637505	ANTIVIBRATION ELEMENT *Hard*	1	-
4	503637504	ANTIVIBRATION ELEMENT *Std*	1	-
1	503640201	SWITCH -	1	-

Ref.	Article N.	Description	Qty	Kit
3	501430001	CABLE GROMMET -	1	-
4	501802403	STATOR ASSY -	1	-
5	586438502	SCREW ITXSCM -	3	-
6	503220401	NUT -	1	-
7	537051604	FLYWHEEL ASSY -	1	-
8	501673501	SPRING -	2	-
9	503230042	WASHER -	2	-
10	537015501	STARTER PAWL -	2	-
11	506006901	SCREW -	2	-
12	586505401	SCREW ITXCSRT -	2	-
13	503705901	HEATING PLATE -	1	-
14	503626772	FRONT HANDLE ASSY *G*	1	-
15	586443001	SCREW ITXSCFT -	4	-
16	586440001	SCREW ITXSCFT -	1	-
17	503684504	ANTIVIBRATION ELEMENT *G*	1	-
1	501485402	SPARK PLUG CAP -	1	-
2	586880304	IGNITION MODULE -	1	-
3	582029701	SCREW ITXSCM -	2	-
4	503718201	SWITCH -	1	-
5	503626101	CABLE -	1	-
6	503897601	CABLE -	1	-
7	525887402	SCREW CITXPANT	1	-

Ref.	Article N.	Description	Qty	Kit
		-		
8	503221011	HEXAGON NUT -	1	-
9	537051605	FLYWHEEL ASSY -	1	-
10	501673501	SPRING -	2	-
11	503230042	WASHER -	2	-
12	537015501	STARTER PAWL -	2	-
13	506006901	SCREW -	2	-
14	503230101	WASHER -	1	-
1	544029702	MUFFLER ASSY *DF*	1	-
2	724128759	SCREW CRPANM -	1	-
3	503766402	SPARK ARRESTER SCREEN -	1	-
4	525825101	SCREW ITXSCM -	2	-
5	579025901	SUPPORT -	1	-
6	503200774	SCREW IHSCFM -	2	-
7	503200702	SCREW IHSCFM -	2	-
8	544029501	MUFFLER ASSY *Tube*	1	-
8	544029502	MUFFLER ASSY *Jungle*	1	-
1	503628171	STARTER ASSY	1	-
2	586443101	SCREW ITXSCFT	1	-
3	503859601	STARTER PULLEY	1	-
4	522037301	STARTER HANDLE	1	-
5	503432902	STARTER ROPE	1	-
6	537283602	RECOIL SPRING	1	-
7	503628202	STARTER HOUSING	1	-
8	537086701	BUSHING	1	-
9	501630601	SLEEVE	1	-

Ref.	Article N.	Description	Qty	Kit
10	525824501	SCREW CITXPANMO	4	-
11	537230201	LABEL *XP*	1	-
11	537230206	LABEL *XPG*	1	-
12	503628301	AIR CONDUCTOR	1	-
2	537060401	RETAINER -	1	-
3	537189801	THERMOSTAT ASSY -	1	-
4	503554901	SWITCH -	1	-
5	537071402	FOIL ELEMENT -	1	-
7	537071802	STATOR ASSY -	1	-
8	586438502	SCREW ITXSCM -	3	-
9	503220401	NUT -	1	-
10	537051606	FLYWHEEL ASSY -	1	-
11	501673501	SPRING -	2	-
12	503230042	WASHER -	2	-
13	537015501	STARTER PAWL -	2	-
14	506006901	SCREW -	2	-
15	501430001	CABLE GROMMET -	1	-
16	503213801	SCREW CRCSRT -	2	-
17	503705901	HEATING PLATE -	1	-
18	503626772	FRONT HANDLE ASSY *G*	1	-
19	503214972	SCREW IHSCFT -	4	-
20	586440001	SCREW ITXSCFT -	1	-
21	503684504	ANTIVIBRATION ELEMENT	1	-

Ref.	Article N.	Description	Qty	Kit
		G		

CLUTCH AND OIL PUMP

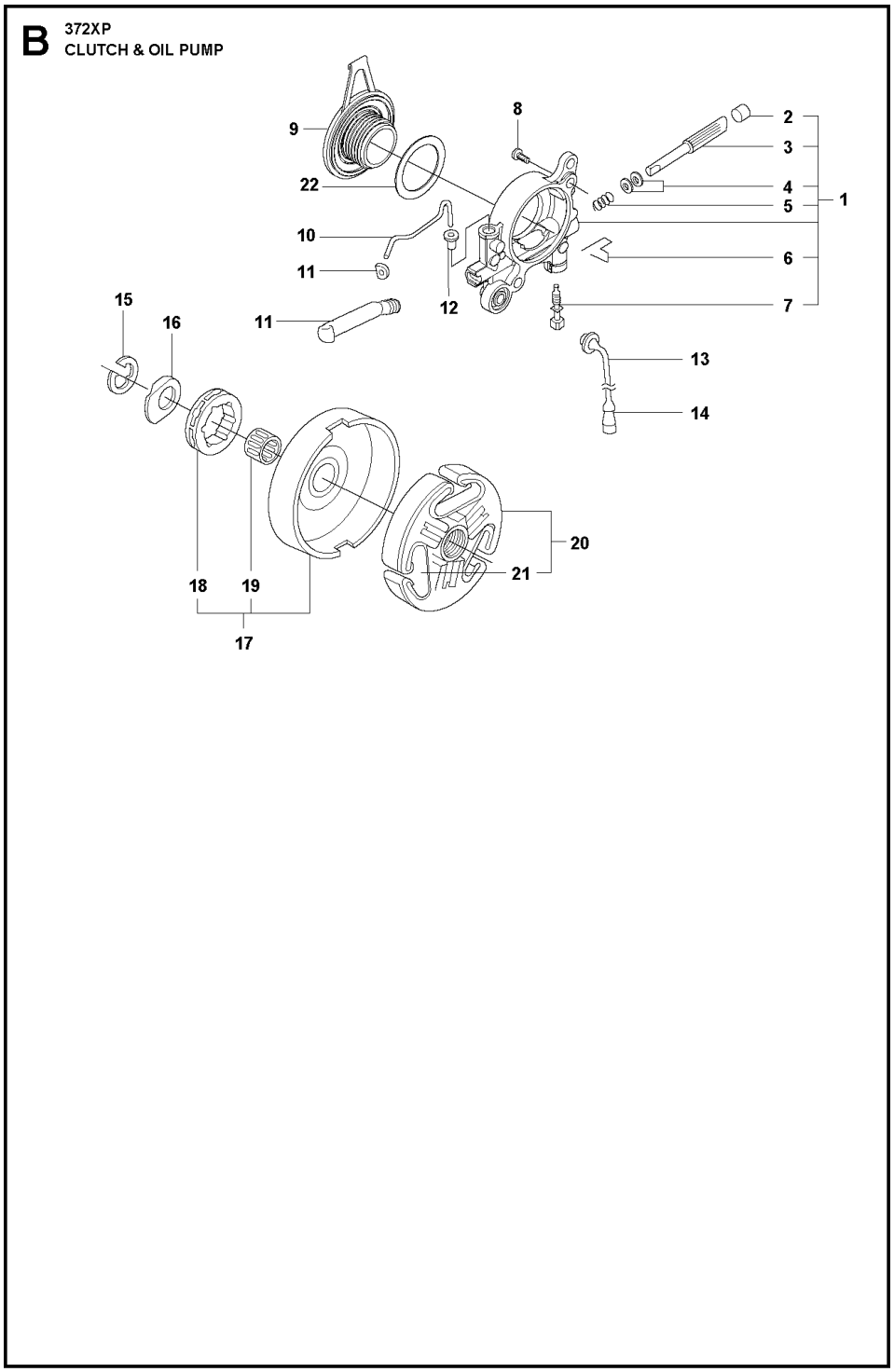

Ref.	Article N.	Description	Qty	Kit
1	588797401	TOOL -	1	-
2	501691701	COMBINATION WRENCH -	1	-
3	503558602	SPANNER *NV5*	1	-
4	503558601	SPANNER *NV4*	1	-
5	503621201	GREASE -	1	-
6	501911401	GREASE GUN -	1	-
7	503969011	WINTER KIT *WINTER*	1	-
8	586505201	SCREW CITXPANT -	1	-
9	575880701	WRENCH *TORX T27/T20*	1	-
1	575269101	AIR FILTER ASSY *80µ*	1	-
1	575269103	AIR FILTER ASSY *Felt*	1	-
1	575269102	AIR FILTER ASSY *44µ*	1	-
2	503735401	CLAMP	1	-
3	537213204	KNOB	1	-
4	503818004	AIR FILTER *Felt*	1	-
4	503818005	AIR FILTER *80µ*	1	-
4	503818006	AIR FILTER *44µ*	1	-
5	503817801	FILTER HOLDER	1	-
6	731231401	HEXAGON NUT	1	-
7	581143001	SCREW ITXSCM	2	-
8	503701101	TUBE	2	-
9	503627502	FILTER HOLDER	1	-
10	503684101	LEVER	1	-
11	503667401	GUIDE BUSHING *Walbro HD-12B*	1	-
11	503665301	GUIDE BUSHING *Walbro HD-6B & HD-12C*	1	-

Ref.	Article N.	Description	Qty	Kit
12	536033701	CARBURETTOR	1	-
13	503400606	IMPULSE HOSE	1	-
14	503431801	SUPPORT SLEEVE	1	-
15	503712701	FLANGE	1	-
16	503226503	SQUARE NUT	2	-
17	503964501	INLET PIPE	1	-
17	503964502	INLET PIPE *For cold conditions*	1	-
18	505283309	HOSE CLAMP	1	-
1	536033701	CARBURETTOR	1	-
2	503647801	REPAIR KIT	1	-
3	501666101	SCREEN	1	-
4	503574201	PLUG	1	-
5	503563401	NEEDLE VALVE	1	-
6	501668301	LEVER	1	-
7	505520125	PIN	1	-
1	525755201	SCREW ITXSCFM -	4	-
2	503751103	HUB CAP -	1	-
3	525887402	SCREW CITXPANT -	1	-
4	501875303	KNEE JOINT -	1	-
5	586438501	SCREW ITXSCM -	1	-
6	503764903	HAND GUARD -	1	-
7	503436501	POSITION SPRING -	1	-
8	503838102	LOCK -	1	-
9	537008701	BRAKE LEVER -	1	-
10	503775201	BUSHING -	1	-
11	503709902	BRAKE SPRING -	1	-
12	503792702	SUPPORT -	1	-
13	503752202	BRAKE BAND ASSY	1	-

Ref.	Article N.	Description	Qty	Kit
		-		
14	537033501	CLUTCH COVER ASSY -	1	-
15	537033571	CLUTCH COVER ASSY -	1	-
16	537033803	LABEL -	1	-
17	503762902	CHIP GUARD -	1	-
18	503897001	SLEEVE -	1	-
19	525887402	SCREW CITXPANT -	1	-
20	525887402	SCREW CITXPANT -	2	-
21	537044102	CHAIN TENSIONER -	1	-
22	537016801	COVER -	1	-
23	503230066	WASHER -	1	-
24	537079502	WORM SCREW -	1	-
25	503998301	PAWL -	1	-
26	537017401	BEARING SLEEVE -	1	-
27	537079402	WORM WHEEL -	1	-
28	503230063	WASHER -	1	-
29	740480702	O-RING -	1	-
30	501517201	CHAIN GUIDE -	1	-
31	503220001	HEXAGON NUT -	2	-
31	503220010	NUT *30 pcs, plastic bag of 503220001*	1	-
32	525887402	SCREW CITXPANT -	1	-
33	503922701	SPIKE *372 WRAP*	1	-

Ref.	Article N.	Description	Qty	Kit
34	503719701	SPIKE -	1	-
1	503521303	OIL PUMP ASSY -	1	-
2	503624901	SEALING PLUG -	1	-
3	503521501	PUMP PISTON -	1	-
4	503230004	WASHER -	2	-
5	501615801	SPRING -	1	-
6	503813001	SPRING -	1	-
7	503811301	SCREW -	1	-
8	525824912	SCREW ITXSCM -	2	-
9	537207807	PUMP PINION -	1	-
10	503774301	OIL PIPE -	1	-
11	503644701	BUSHING *Up to serial number 20182009999*	1	-
11	587291801	OIL PRESSURE HOSE *From serial number 20182100001*	1	-
12	504300026	SEALING -	1	-
13	503426701	OIL HOSE -	1	-
14	501544102	OIL SCREEN -	1	-
15	503272101	E-CLIP -	1	-
16	503752401	WASHER -	1	-
17	586980602	CLUTCH DRUM ASSY *3/8x8T*	1	-
17	586980601	CLUTCH DRUM ASSY *3/8x7T*	1	-
18	501598002	RIM SPROCKET *3/8x7T*	1	-
18	505303661	RIM SPROCKET	1	-

Ref.	Article N.	Description	Qty	Kit
		3/8x8T		
19	503432001	NEEDLE HOLDER *3/8*	1	-
20	586798401	CLUTCH ASSY -	1	-
21	537360601	CLUTCH SPRING -	3	-
22	503230059	WASHER -	1	-
1	503626819	CRANKCASE ASSY -	1	-
2	503967001	BUSHING -	1	-
3	503260301	SEALING RING -	1	-
4	503751801	PIN -	1	-
5	501270801	GUIDE BUSHING -	1	-
6	501270801	GUIDE BUSHING -	1	-
7	537051301	BAR BOLT -	2	-
8	525887402	SCREW CITXPANT -	1	-
9	537013702	CHAIN GUIDE PLATE *From serial number 20182100001*	1	-
9	537046601	KIT *Up to serial number 20182009999*	1	-
10	586445401	SCREW ITXSCM -	1	-
11	525755201	SCREW ITXSCFM -	4	-
12	588093701	CARBURETTOR AREA BASE -	1	-
13	503734401	GROMMET -	1	-
14	503627701	CHOKE CONTROL -	1	-
15	579468901	SUPPORT -	1	-
16	537095401	GROMMET -	1	-

Ref.	Article N.	Description	Qty	Kit
17	525824913	SCREW ITXSCM -	2	-
18	501686801	CHAIN CATCHER -	1	-
19	503627201	GASKET -	1	-
20	503857301	COVER -	1	-
21	505275719	SEALING RING -	1	-
22	503628401	AIR NOZZLE -	1	-
23	525755201	SCREW ITXSCFM -	1	-
24	503846101	BUFFER -	1	-
25	537215207	TANK CAP ASSY -	1	-
26	503578901	HOLDER -	1	-
27	589241101	GASKET -	1	-
28	575791202	SCREW ITXSCM -	6	-
29	537403501	FILTER -	1	-
30	530026119	CHECK VALVE -	1	-
31	537042901	BUMPER -	1	-
32	525755103	SCREW ITXSCFM -	1	-
33	537024401	WEAR PROTECTION -	1	-
34	537089201	CHAIN CATCHER -	1	-
35	575793501	SCREW ITXPANM -	2	-
36	537017101	SPIKE -	1	-
37	503222401	LOCK NUT -	1	-
38	503647902	SPIKE	1	-

Ref.	Article N.	Description	Qty	Kit
		-		
39	503647201	GASKET KIT *A = Set of gaskets*	1	-
1	503748705	CRANKSHAFT ASSY -	1	-
2	586798401	CLUTCH ASSY -	1	-
3	503779101	SLEEVE -	1	-
4	503263019	O-RING -	1	-
5	585975001	BALL BEARING -	2	-
6	577572401	NEEDLE BEARING -	1	-
1	503627807	CYLINDER COVER ASSY *Std*	1	-
1	503627808	CYLINDER COVER ASSY *Hd*	1	-
2	503987401	LABEL -	1	-
3	525887001	SCREW CITXPANMO -	3	-
4	503817701	FILTER COVER *Hd*	1	-
4	503628001	FILTER COVER *Std*	1	-
5	503740102	SNAP LOCKING -	2	-
6	537016501	SUPPORT -	1	-
7	537055903	SLEEVE -	3	-
1	503939372	CYLINDER ASSY *EPA*	1	-
1	503626473	CYLINDER ASSY -	1	-
2	503939271	PISTON ASSY *EPA*	1	-
2	503691271	PISTON ASSY -	1	-
3	503552201	PLUG -	1	-

Ref.	Article N.	Description	Qty	Kit
4	577572401	NEEDLE BEARING -	1	-
5	503715301	DECOMPRESSION VALVE -	1	-
6	525824903	SCREW ITXSCM -	4	-
7	503235111	SPARK PLUG *BPMR7A*	1	-
8	503961501	GASKET -	1	-
9	503289036	PISTON RING *EPA*	2	-
9	503289042	PISTON RING -	1	-
10	737431200	SNAP RING -	2	-
11	503775901	GASKET -	1	-
12	503775802	HEAT DEFLECTOR -	1	-
13	503647201	GASKET KIT *A = Set of gaskets*	1	-
1	544114013	FUEL TANK -	1	-
2	581756106	FUEL HOSE -	1	-
3	537099301	CONNECTION BEND *From serial number 20061200001 - 20184700378*	1	-
4	503600401	FILTER PLUG *Up to serial number - 20061199999*	1	-
4	537092201	TANK VENT ASSY *From serial number 20061200001 - 20184700378*	1	-
4	501873101	TANK VENT ASSY *Up to serial number - 20061199999*	1	-
4	501152901	TANK VENT ASSY *From serial number 20184700379 -*	1	-
5	503717601	THROTTLE CABLE ASSY -	1	-
6	720124020	PARALLEL PIN -	1	-
7	503556601	THROTTLE LOCKOUT -	1	-
8	503736401	SPRING	1	-

Ref.	Article N.	Description	Qty	Kit
		-		
9	503829801	TRIGGER -	1	-
10	720127220	PARALLEL PIN -	1	-
11	503895601	ANTIVIBRATION ELEMENT *Std*	1	-
11	503895602	ANTIVIBRATION ELEMENT *Hard*	1	-
12	537215207	TANK CAP ASSY -	1	-
13	503578901	HOLDER -	1	-
14	589241101	GASKET -	1	-
15	581756202	FUEL HOSE -	1	-
16	503443201	FUEL FILTER -	1	-
17	503637603	ANTIVIBRATION ELEMENT *Std*	1	-
17	503637604	ANTIVIBRATION ELEMENT *Hard*	1	-
1	503628602	HANDLE *WRAP G No screws or antivibration element included.*	1	-
1	503628671	HANDLE *WRAP*	1	-
2	586443001	SCREW ITXSCFT -	5	-
3	586440001	SCREW ITXSCFT -	1	-
4	503684504	ANTIVIBRATION ELEMENT *WRAP G*	1	-
4	503637504	ANTIVIBRATION ELEMENT *Wrap*	1	-
5	537017201	SPIKE -	1	-
1	503626771	FRONT HANDLE ASSY -	1	-
2	586443001	SCREW ITXSCFT -	4	-
3	586440001	SCREW ITXSCFT -	1	-

Ref.	Article N.	Description	Qty	Kit
4	503637505	ANTIVIBRATION ELEMENT *Hard*	1	-
4	503637504	ANTIVIBRATION ELEMENT *Std*	1	-
1	503640201	SWITCH -	1	-
3	501430001	CABLE GROMMET -	1	-
4	501802403	STATOR ASSY -	1	-
5	586438502	SCREW ITXSCM -	3	-
6	503220401	NUT -	1	-
7	537051604	FLYWHEEL ASSY -	1	-
8	501673501	SPRING -	2	-
9	503230042	WASHER -	2	-
10	537015501	STARTER PAWL -	2	-
11	506006901	SCREW -	2	-
12	586505401	SCREW ITXCSRT -	2	-
13	503705901	HEATING PLATE -	1	-
14	503626772	FRONT HANDLE ASSY *G*	1	-
15	586443001	SCREW ITXSCFT -	4	-
16	586440001	SCREW ITXSCFT -	1	-
17	503684504	ANTIVIBRATION ELEMENT *G*	1	-
1	501485402	SPARK PLUG CAP -	1	-
2	586880304	IGNITION MODULE -	1	-
3	582029701	SCREW ITXSCM -	2	-
4	503718201	SWITCH	1	-

Ref.	Article N.	Description	Qty	Kit
		-		
5	503626101	CABLE -	1	-
6	503897601	CABLE -	1	-
7	525887402	SCREW CITXPANT -	1	-
8	503221011	HEXAGON NUT -	1	-
9	537051605	FLYWHEEL ASSY -	1	-
10	501673501	SPRING -	2	-
11	503230042	WASHER -	2	-
12	537015501	STARTER PAWL -	2	-
13	506006901	SCREW -	2	-
14	503230101	WASHER -	1	-
1	544029702	MUFFLER ASSY *DF*	1	-
2	724128759	SCREW CRPANM -	1	-
3	503766402	SPARK ARRESTER SCREEN -	1	-
4	525825101	SCREW ITXSCM -	2	-
5	579025901	SUPPORT -	1	-
6	503200774	SCREW IHSCFM -	2	-
7	503200702	SCREW IHSCFM -	2	-
8	544029501	MUFFLER ASSY *Tube*	1	-
8	544029502	MUFFLER ASSY *Jungle*	1	-
1	503628171	STARTER ASSY	1	-
2	586443101	SCREW ITXSCFT	1	-
3	503859601	STARTER PULLEY	1	-

Ref.	Article N.	Description	Qty	Kit
4	522037301	STARTER HANDLE	1	-
5	503432902	STARTER ROPE	1	-
6	537283602	RECOIL SPRING	1	-
7	503628202	STARTER HOUSING	1	-
8	537086701	BUSHING	1	-
9	501630601	SLEEVE	1	-
10	525824501	SCREW CITXPANMO	4	-
11	537230201	LABEL *XP*	1	-
11	537230206	LABEL *XPG*	1	-
12	503628301	AIR CONDUCTOR	1	-
2	537060401	RETAINER -	1	-
3	537189801	THERMOSTAT ASSY -	1	-
4	503554901	SWITCH -	1	-
5	537071402	FOIL ELEMENT -	1	-
7	537071802	STATOR ASSY -	1	-
8	586438502	SCREW ITXSCM -	3	-
9	503220401	NUT -	1	-
10	537051606	FLYWHEEL ASSY -	1	-
11	501673501	SPRING -	2	-
12	503230042	WASHER -	2	-
13	537015501	STARTER PAWL -	2	-
14	506006901	SCREW -	2	-
15	501430001	CABLE GROMMET -	1	-
16	503213801	SCREW CRCSRT -	2	-
17	503705901	HEATING PLATE -	1	-

Ref.	Article N.	Description	Qty	Kit
18	503626772	FRONT HANDLE ASSY *G*	1	-
19	503214972	SCREW IHSCFT -	4	-
20	586440001	SCREW ITXSCFT -	1	-
21	503684504	ANTIVIBRATION ELEMENT *G*	1	-

CRANKCASE

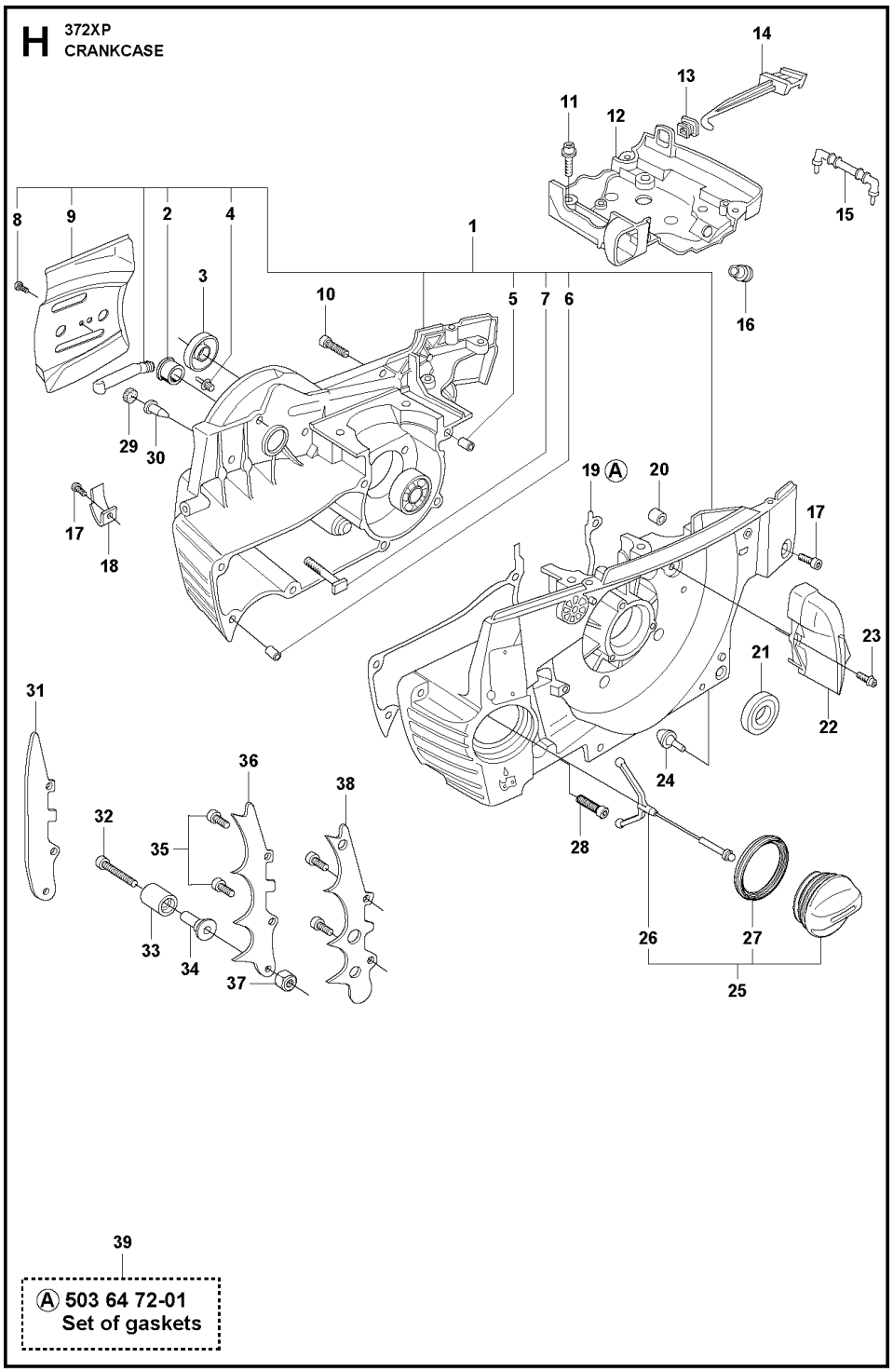

Ref.	Article N.	Description	Qty	Kit
1	588797401	TOOL -	1	-
2	501691701	COMBINATION WRENCH -	1	-
3	503558602	SPANNER *NV5*	1	-

Ref.	Article N.	Description	Qty	Kit
4	503558601	SPANNER *NV4*	1	-
5	503621201	GREASE -	1	-
6	501911401	GREASE GUN -	1	-
7	503969011	WINTER KIT *WINTER*	1	-
8	586505201	SCREW CITXPANT -	1	-
9	575880701	WRENCH *TORX T27/T20*	1	-
1	575269101	AIR FILTER ASSY *80µ*	1	-
1	575269103	AIR FILTER ASSY *Felt*	1	-
1	575269102	AIR FILTER ASSY *44µ*	1	-
2	503735401	CLAMP	1	-
3	537213204	KNOB	1	-
4	503818004	AIR FILTER *Felt*	1	-
4	503818005	AIR FILTER *80µ*	1	-
4	503818006	AIR FILTER *44µ*	1	-
5	503817801	FILTER HOLDER	1	-
6	731231401	HEXAGON NUT	1	-
7	581143001	SCREW ITXSCM	2	-
8	503701101	TUBE	2	-
9	503627502	FILTER HOLDER	1	-
10	503684101	LEVER	1	-
11	503667401	GUIDE BUSHING *Walbro HD-12B*	1	-
11	503665301	GUIDE BUSHING *Walbro HD-6B & HD-12C*	1	-
12	536033701	CARBURETTOR	1	-
13	503400606	IMPULSE HOSE	1	-
14	503431801	SUPPORT SLEEVE	1	-
15	503712701	FLANGE	1	-
16	503226503	SQUARE NUT	2	-

Ref.	Article N.	Description	Qty	Kit
17	503964501	INLET PIPE	1	-
17	503964502	INLET PIPE *For cold conditions*	1	-
18	505283309	HOSE CLAMP	1	-
1	536033701	CARBURETTOR	1	-
2	503647801	REPAIR KIT	1	-
3	501666101	SCREEN	1	-
4	503574201	PLUG	1	-
5	503563401	NEEDLE VALVE	1	-
6	501668301	LEVER	1	-
7	505520125	PIN	1	-
1	525755201	SCREW ITXSCFM -	4	-
2	503751103	HUB CAP -	1	-
3	525887402	SCREW CITXPANT -	1	-
4	501875303	KNEE JOINT -	1	-
5	586438501	SCREW ITXSCM -	1	-
6	503764903	HAND GUARD -	1	-
7	503436501	POSITION SPRING -	1	-
8	503838102	LOCK -	1	-
9	537008701	BRAKE LEVER -	1	-
10	503775201	BUSHING -	1	-
11	503709902	BRAKE SPRING -	1	-
12	503792702	SUPPORT -	1	-
13	503752202	BRAKE BAND ASSY -	1	-
14	537033501	CLUTCH COVER ASSY -	1	-
15	537033571	CLUTCH COVER ASSY -	1	-
16	537033803	LABEL	1	-

Ref.	Article N.	Description	Qty	Kit
		-		
17	503762902	CHIP GUARD -	1	-
18	503897001	SLEEVE -	1	-
19	525887402	SCREW CITXPANT -	1	-
20	525887402	SCREW CITXPANT -	2	-
21	537044102	CHAIN TENSIONER -	1	-
22	537016801	COVER -	1	-
23	503230066	WASHER -	1	-
24	537079502	WORM SCREW -	1	-
25	503998301	PAWL -	1	-
26	537017401	BEARING SLEEVE -	1	-
27	537079402	WORM WHEEL -	1	-
28	503230063	WASHER -	1	-
29	740480702	O-RING -	1	-
30	501517201	CHAIN GUIDE -	1	-
31	503220001	HEXAGON NUT -	2	-
31	503220010	NUT *30 pcs, plastic bag of 503220001*	1	-
32	525887402	SCREW CITXPANT -	1	-
33	503922701	SPIKE *372 WRAP*	1	-
34	503719701	SPIKE -	1	-
1	503521303	OIL PUMP ASSY -	1	-
2	503624901	SEALING PLUG -	1	-

Ref.	Article N.	Description	Qty	Kit
3	503521501	PUMP PISTON -	1	-
4	503230004	WASHER -	2	-
5	501615801	SPRING -	1	-
6	503813001	SPRING -	1	-
7	503811301	SCREW -	1	-
8	525824912	SCREW ITXSCM -	2	-
9	537207807	PUMP PINION -	1	-
10	503774301	OIL PIPE -	1	-
11	503644701	BUSHING *Up to serial number 20182009999*	1	-
11	587291801	OIL PRESSURE HOSE *From serial number 20182100001*	1	-
12	504300026	SEALING -	1	-
13	503426701	OIL HOSE -	1	-
14	501544102	OIL SCREEN -	1	-
15	503272101	E-CLIP -	1	-
16	503752401	WASHER -	1	-
17	586980602	CLUTCH DRUM ASSY *3/8x8T*	1	-
17	586980601	CLUTCH DRUM ASSY *3/8x7T*	1	-
18	501598002	RIM SPROCKET *3/8x7T*	1	-
18	505303661	RIM SPROCKET *3/8x8T*	1	-
19	503432001	NEEDLE HOLDER *3/8*	1	-
20	586798401	CLUTCH ASSY -	1	-
21	537360601	CLUTCH SPRING	3	-

Ref.	Article N.	Description	Qty	Kit
		-		
22	503230059	WASHER -	1	-
1	503626819	CRANKCASE ASSY -	1	-
2	503967001	BUSHING -	1	-
3	503260301	SEALING RING -	1	-
4	503751801	PIN -	1	-
5	501270801	GUIDE BUSHING -	1	-
6	501270801	GUIDE BUSHING -	1	-
7	537051301	BAR BOLT -	2	-
8	525887402	SCREW CITXPANT -	1	-
9	537013702	CHAIN GUIDE PLATE *From serial number 20182100001*	1	-
9	537046601	KIT *Up to serial number 20182009999*	1	-
10	586445401	SCREW ITXSCM -	1	-
11	525755201	SCREW ITXSCFM -	4	-
12	588093701	CARBURETTOR AREA BASE -	1	-
13	503734401	GROMMET -	1	-
14	503627701	CHOKE CONTROL -	1	-
15	579468901	SUPPORT -	1	-
16	537095401	GROMMET -	1	-
17	525824913	SCREW ITXSCM -	2	-
18	501686801	CHAIN CATCHER -	1	-
19	503627201	GASKET -	1	-

Ref.	Article N.	Description	Qty	Kit
20	503857301	COVER -	1	-
21	505275719	SEALING RING -	1	-
22	503628401	AIR NOZZLE -	1	-
23	525755201	SCREW ITXSCFM -	1	-
24	503846101	BUFFER -	1	-
25	537215207	TANK CAP ASSY -	1	-
26	503578901	HOLDER -	1	-
27	589241101	GASKET -	1	-
28	575791202	SCREW ITXSCM -	6	-
29	537403501	FILTER -	1	-
30	530026119	CHECK VALVE -	1	-
31	537042901	BUMPER -	1	-
32	525755103	SCREW ITXSCFM -	1	-
33	537024401	WEAR PROTECTION -	1	-
34	537089201	CHAIN CATCHER -	1	-
35	575793501	SCREW ITXPANM -	2	-
36	537017101	SPIKE -	1	-
37	503222401	LOCK NUT -	1	-
38	503647902	SPIKE -	1	-
39	503647201	GASKET KIT *A = Set of gaskets*	1	-
1	503748705	CRANKSHAFT ASSY -	1	-
2	586798401	CLUTCH ASSY	1	-

Ref.	Article N.	Description	Qty	Kit
		-		
3	503779101	SLEEVE -	1	-
4	503263019	O-RING -	1	-
5	585975001	BALL BEARING -	2	-
6	577572401	NEEDLE BEARING -	1	-
1	503627807	CYLINDER COVER ASSY *Std*	1	-
1	503627808	CYLINDER COVER ASSY *Hd*	1	-
2	503987401	LABEL -	1	-
3	525887001	SCREW CITXPANMO -	3	-
4	503817701	FILTER COVER *Hd*	1	-
4	503628001	FILTER COVER *Std*	1	-
5	503740102	SNAP LOCKING -	2	-
6	537016501	SUPPORT -	1	-
7	537055903	SLEEVE -	3	-
1	503939372	CYLINDER ASSY *EPA*	1	-
1	503626473	CYLINDER ASSY -	1	-
2	503939271	PISTON ASSY *EPA*	1	-
2	503691271	PISTON ASSY -	1	-
3	503552201	PLUG -	1	-
4	577572401	NEEDLE BEARING -	1	-
5	503715301	DECOMPRESSION VALVE -	1	-
6	525824903	SCREW ITXSCM -	4	-

Ref.	Article N.	Description	Qty	Kit
7	503235111	SPARK PLUG *BPMR7A*	1	-
8	503961501	GASKET -	1	-
9	503289036	PISTON RING *EPA*	2	-
9	503289042	PISTON RING -	1	-
10	737431200	SNAP RING -	2	-
11	503775901	GASKET -	1	-
12	503775802	HEAT DEFLECTOR -	1	-
13	503647201	GASKET KIT *A = Set of gaskets*	1	-
1	544114013	FUEL TANK -	1	-
2	581756106	FUEL HOSE -	1	-
3	537099301	CONNECTION BEND *From serial number 20061200001 - 20184700378*	1	-
4	503600401	FILTER PLUG *Up to serial number - 20061199999*	1	-
4	537092201	TANK VENT ASSY *From serial number 20061200001 - 20184700378*	1	-
4	501873101	TANK VENT ASSY *Up to serial number - 20061199999*	1	-
4	501152901	TANK VENT ASSY *From serial number 20184700379 -*	1	-
5	503717601	THROTTLE CABLE ASSY -	1	-
6	720124020	PARALLEL PIN -	1	-
7	503556601	THROTTLE LOCKOUT -	1	-
8	503736401	SPRING -	1	-
9	503829801	TRIGGER -	1	-
10	720127220	PARALLEL PIN -	1	-
11	503895601	ANTIVIBRATION ELEMENT	1	-

Ref.	Article N.	Description	Qty	Kit
		Std		
11	503895602	ANTIVIBRATION ELEMENT *Hard*	1	-
12	537215207	TANK CAP ASSY -	1	-
13	503578901	HOLDER -	1	-
14	589241101	GASKET -	1	-
15	581756202	FUEL HOSE -	1	-
16	503443201	FUEL FILTER -	1	-
17	503637603	ANTIVIBRATION ELEMENT *Std*	1	-
17	503637604	ANTIVIBRATION ELEMENT *Hard*	1	-
1	503628602	HANDLE *WRAP G No screws or antivibration element included.*	1	-
1	503628671	HANDLE *WRAP*	1	-
2	586443001	SCREW ITXSCFT -	5	-
3	586440001	SCREW ITXSCFT -	1	-
4	503684504	ANTIVIBRATION ELEMENT *WRAP G*	1	-
4	503637504	ANTIVIBRATION ELEMENT *Wrap*	1	-
5	537017201	SPIKE -	1	-
1	503626771	FRONT HANDLE ASSY -	1	-
2	586443001	SCREW ITXSCFT -	4	-
3	586440001	SCREW ITXSCFT -	1	-
4	503637505	ANTIVIBRATION ELEMENT *Hard*	1	-
4	503637504	ANTIVIBRATION ELEMENT *Std*	1	-
1	503640201	SWITCH -	1	-

Ref.	Article N.	Description	Qty	Kit
3	501430001	CABLE GROMMET -	1	-
4	501802403	STATOR ASSY -	1	-
5	586438502	SCREW ITXSCM -	3	-
6	503220401	NUT -	1	-
7	537051604	FLYWHEEL ASSY -	1	-
8	501673501	SPRING -	2	-
9	503230042	WASHER -	2	-
10	537015501	STARTER PAWL -	2	-
11	506006901	SCREW -	2	-
12	586505401	SCREW ITXCSRT -	2	-
13	503705901	HEATING PLATE -	1	-
14	503626772	FRONT HANDLE ASSY *G*	1	-
15	586443001	SCREW ITXSCFT -	4	-
16	586440001	SCREW ITXSCFT -	1	-
17	503684504	ANTIVIBRATION ELEMENT *G*	1	-
1	501485402	SPARK PLUG CAP -	1	-
2	586880304	IGNITION MODULE -	1	-
3	582029701	SCREW ITXSCM -	2	-
4	503718201	SWITCH -	1	-
5	503626101	CABLE -	1	-
6	503897601	CABLE -	1	-
7	525887402	SCREW CITXPANT	1	-

Ref.	Article N.	Description	Qty	Kit
		-		
8	503221011	HEXAGON NUT -	1	-
9	537051605	FLYWHEEL ASSY -	1	-
10	501673501	SPRING -	2	-
11	503230042	WASHER -	2	-
12	537015501	STARTER PAWL -	2	-
13	506006901	SCREW -	2	-
14	503230101	WASHER -	1	-
1	544029702	MUFFLER ASSY *DF*	1	-
2	724128759	SCREW CRPANM -	1	-
3	503766402	SPARK ARRESTER SCREEN -	1	-
4	525825101	SCREW ITXSCM -	2	-
5	579025901	SUPPORT -	1	-
6	503200774	SCREW IHSCFM -	2	-
7	503200702	SCREW IHSCFM -	2	-
8	544029501	MUFFLER ASSY *Tube*	1	-
8	544029502	MUFFLER ASSY *Jungle*	1	-
1	503628171	STARTER ASSY	1	-
2	586443101	SCREW ITXSCFT	1	-
3	503859601	STARTER PULLEY	1	-
4	522037301	STARTER HANDLE	1	-
5	503432902	STARTER ROPE	1	-
6	537283602	RECOIL SPRING	1	-
7	503628202	STARTER HOUSING	1	-
8	537086701	BUSHING	1	-
9	501630601	SLEEVE	1	-

Ref.	Article N.	Description	Qty	Kit
10	525824501	SCREW CITXPANMO	4	-
11	537230201	LABEL *XP*	1	-
11	537230206	LABEL *XPG*	1	-
12	503628301	AIR CONDUCTOR	1	-
2	537060401	RETAINER -	1	-
3	537189801	THERMOSTAT ASSY -	1	-
4	503554901	SWITCH -	1	-
5	537071402	FOIL ELEMENT -	1	-
7	537071802	STATOR ASSY -	1	-
8	586438502	SCREW ITXSCM -	3	-
9	503220401	NUT -	1	-
10	537051606	FLYWHEEL ASSY -	1	-
11	501673501	SPRING -	2	-
12	503230042	WASHER -	2	-
13	537015501	STARTER PAWL -	2	-
14	506006901	SCREW -	2	-
15	501430001	CABLE GROMMET -	1	-
16	503213801	SCREW CRCSRT -	2	-
17	503705901	HEATING PLATE -	1	-
18	503626772	FRONT HANDLE ASSY *G*	1	-
19	503214972	SCREW IHSCFT -	4	-
20	586440001	SCREW ITXSCFT -	1	-
21	503684504	ANTIVIBRATION ELEMENT	1	-

Ref.	Article N.	Description	Qty	Kit
		G		

CRANKSHAFT

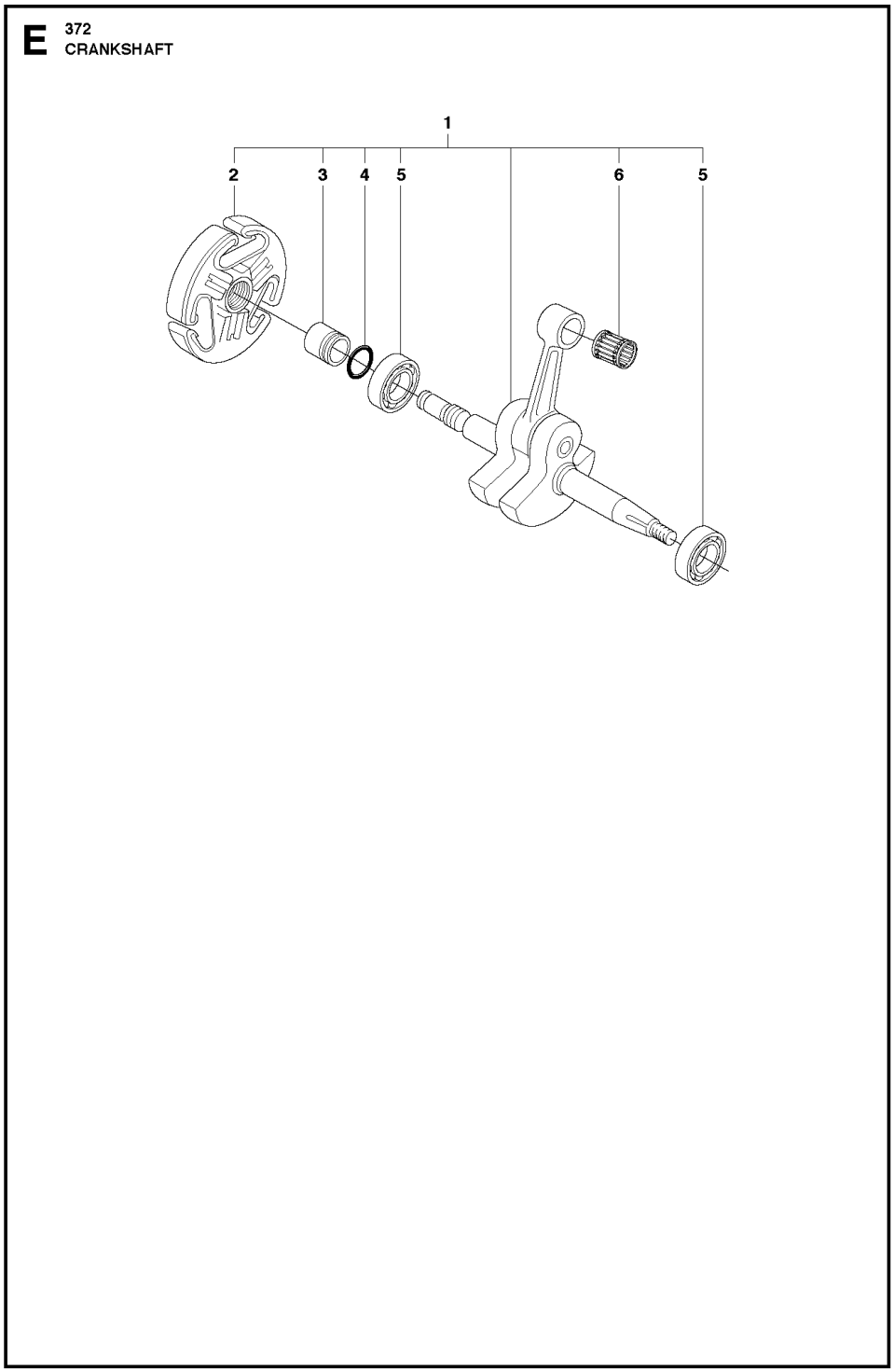

Ref.	Article N.	Description	Qty	Kit
1	588797401	TOOL -	1	-
2	501691701	COMBINATION WRENCH -	1	-
3	503558602	SPANNER *NV5*	1	-
4	503558601	SPANNER *NV4*	1	-
5	503621201	GREASE -	1	-
6	501911401	GREASE GUN -	1	-
7	503969011	WINTER KIT *WINTER*	1	-
8	586505201	SCREW CITXPANT -	1	-
9	575880701	WRENCH *TORX T27/T20*	1	-
1	575269101	AIR FILTER ASSY *80µ*	1	-
1	575269103	AIR FILTER ASSY *Felt*	1	-
1	575269102	AIR FILTER ASSY *44µ*	1	-
2	503735401	CLAMP	1	-
3	537213204	KNOB	1	-
4	503818004	AIR FILTER *Felt*	1	-
4	503818005	AIR FILTER *80µ*	1	-
4	503818006	AIR FILTER *44µ*	1	-
5	503817801	FILTER HOLDER	1	-
6	731231401	HEXAGON NUT	1	-
7	581143001	SCREW ITXSCM	2	-
8	503701101	TUBE	2	-
9	503627502	FILTER HOLDER	1	-
10	503684101	LEVER	1	-
11	503667401	GUIDE BUSHING *Walbro HD-12B*	1	-
11	503665301	GUIDE BUSHING *Walbro HD-6B & HD-12C*	1	-

Ref.	Article N.	Description	Qty	Kit
12	536033701	CARBURETTOR	1	-
13	503400606	IMPULSE HOSE	1	-
14	503431801	SUPPORT SLEEVE	1	-
15	503712701	FLANGE	1	-
16	503226503	SQUARE NUT	2	-
17	503964501	INLET PIPE	1	-
17	503964502	INLET PIPE *For cold conditions*	1	-
18	505283309	HOSE CLAMP	1	-
1	536033701	CARBURETTOR	1	-
2	503647801	REPAIR KIT	1	-
3	501666101	SCREEN	1	-
4	503574201	PLUG	1	-
5	503563401	NEEDLE VALVE	1	-
6	501668301	LEVER	1	-
7	505520125	PIN	1	-
1	525755201	SCREW ITXSCFM -	4	-
2	503751103	HUB CAP -	1	-
3	525887402	SCREW CITXPANT -	1	-
4	501875303	KNEE JOINT -	1	-
5	586438501	SCREW ITXSCM -	1	-
6	503764903	HAND GUARD -	1	-
7	503436501	POSITION SPRING -	1	-
8	503838102	LOCK -	1	-
9	537008701	BRAKE LEVER -	1	-
10	503775201	BUSHING -	1	-
11	503709902	BRAKE SPRING -	1	-
12	503792702	SUPPORT -	1	-
13	503752202	BRAKE BAND ASSY	1	-

Ref.	Article N.	Description	Qty	Kit
		-		
14	537033501	CLUTCH COVER ASSY -	1	-
15	537033571	CLUTCH COVER ASSY -	1	-
16	537033803	LABEL -	1	-
17	503762902	CHIP GUARD -	1	-
18	503897001	SLEEVE -	1	-
19	525887402	SCREW CITXPANT -	1	-
20	525887402	SCREW CITXPANT -	2	-
21	537044102	CHAIN TENSIONER -	1	-
22	537016801	COVER -	1	-
23	503230066	WASHER -	1	-
24	537079502	WORM SCREW -	1	-
25	503998301	PAWL -	1	-
26	537017401	BEARING SLEEVE -	1	-
27	537079402	WORM WHEEL -	1	-
28	503230063	WASHER -	1	-
29	740480702	O-RING -	1	-
30	501517201	CHAIN GUIDE -	1	-
31	503220001	HEXAGON NUT -	2	-
31	503220010	NUT *30 pcs, plastic bag of 503220001*	1	-
32	525887402	SCREW CITXPANT -	1	-
33	503922701	SPIKE *372 WRAP*	1	-

Ref.	Article N.	Description	Qty	Kit
34	503719701	SPIKE -	1	-
1	503521303	OIL PUMP ASSY -	1	-
2	503624901	SEALING PLUG -	1	-
3	503521501	PUMP PISTON -	1	-
4	503230004	WASHER -	2	-
5	501615801	SPRING -	1	-
6	503813001	SPRING -	1	-
7	503811301	SCREW -	1	-
8	525824912	SCREW ITXSCM -	2	-
9	537207807	PUMP PINION -	1	-
10	503774301	OIL PIPE -	1	-
11	503644701	BUSHING *Up to serial number 20182009999*	1	-
11	587291801	OIL PRESSURE HOSE *From serial number 20182100001*	1	-
12	504300026	SEALING -	1	-
13	503426701	OIL HOSE -	1	-
14	501544102	OIL SCREEN -	1	-
15	503272101	E-CLIP -	1	-
16	503752401	WASHER -	1	-
17	586980602	CLUTCH DRUM ASSY *3/8x8T*	1	-
17	586980601	CLUTCH DRUM ASSY *3/8x7T*	1	-
18	501598002	RIM SPROCKET *3/8x7T*	1	-
18	505303661	RIM SPROCKET	1	-

Ref.	Article N.	Description	Qty	Kit
		3/8x8T		
19	503432001	NEEDLE HOLDER *3/8*	1	-
20	586798401	CLUTCH ASSY -	1	-
21	537360601	CLUTCH SPRING -	3	-
22	503230059	WASHER -	1	-
1	503626819	CRANKCASE ASSY -	1	-
2	503967001	BUSHING -	1	-
3	503260301	SEALING RING -	1	-
4	503751801	PIN -	1	-
5	501270801	GUIDE BUSHING -	1	-
6	501270801	GUIDE BUSHING -	1	-
7	537051301	BAR BOLT -	2	-
8	525887402	SCREW CITXPANT -	1	-
9	537013702	CHAIN GUIDE PLATE *From serial number 20182100001*	1	-
9	537046601	KIT *Up to serial number 20182009999*	1	-
10	586445401	SCREW ITXSCM -	1	-
11	525755201	SCREW ITXSCFM -	4	-
12	588093701	CARBURETTOR AREA BASE -	1	-
13	503734401	GROMMET -	1	-
14	503627701	CHOKE CONTROL -	1	-
15	579468901	SUPPORT -	1	-
16	537095401	GROMMET -	1	-

Ref.	Article N.	Description	Qty	Kit
17	525824913	SCREW ITXSCM -	2	-
18	501686801	CHAIN CATCHER -	1	-
19	503627201	GASKET -	1	-
20	503857301	COVER -	1	-
21	505275719	SEALING RING -	1	-
22	503628401	AIR NOZZLE -	1	-
23	525755201	SCREW ITXSCFM -	1	-
24	503846101	BUFFER -	1	-
25	537215207	TANK CAP ASSY -	1	-
26	503578901	HOLDER -	1	-
27	589241101	GASKET -	1	-
28	575791202	SCREW ITXSCM -	6	-
29	537403501	FILTER -	1	-
30	530026119	CHECK VALVE -	1	-
31	537042901	BUMPER -	1	-
32	525755103	SCREW ITXSCFM -	1	-
33	537024401	WEAR PROTECTION -	1	-
34	537089201	CHAIN CATCHER -	1	-
35	575793501	SCREW ITXPANM -	2	-
36	537017101	SPIKE -	1	-
37	503222401	LOCK NUT -	1	-
38	503647902	SPIKE	1	-

Ref.	Article N.	Description	Qty	Kit
		-		
39	503647201	GASKET KIT *A = Set of gaskets*	1	-
1	503748705	CRANKSHAFT ASSY -	1	-
2	586798401	CLUTCH ASSY -	1	-
3	503779101	SLEEVE -	1	-
4	503263019	O-RING -	1	-
5	585975001	BALL BEARING -	2	-
6	577572401	NEEDLE BEARING -	1	-
1	503627807	CYLINDER COVER ASSY *Std*	1	-
1	503627808	CYLINDER COVER ASSY *Hd*	1	-
2	503987401	LABEL -	1	-
3	525887001	SCREW CITXPANMO -	3	-
4	503817701	FILTER COVER *Hd*	1	-
4	503628001	FILTER COVER *Std*	1	-
5	503740102	SNAP LOCKING -	2	-
6	537016501	SUPPORT -	1	-
7	537055903	SLEEVE -	3	-
1	503939372	CYLINDER ASSY *EPA*	1	-
1	503626473	CYLINDER ASSY -	1	-
2	503939271	PISTON ASSY *EPA*	1	-
2	503691271	PISTON ASSY -	1	-
3	503552201	PLUG -	1	-

Ref.	Article N.	Description	Qty	Kit
4	577572401	NEEDLE BEARING -	1	-
5	503715301	DECOMPRESSION VALVE -	1	-
6	525824903	SCREW ITXSCM -	4	-
7	503235111	SPARK PLUG *BPMR7A*	1	-
8	503961501	GASKET -	1	-
9	503289036	PISTON RING *EPA*	2	-
9	503289042	PISTON RING -	1	-
10	737431200	SNAP RING -	2	-
11	503775901	GASKET -	1	-
12	503775802	HEAT DEFLECTOR -	1	-
13	503647201	GASKET KIT *A = Set of gaskets*	1	-
1	544114013	FUEL TANK -	1	-
2	581756106	FUEL HOSE -	1	-
3	537099301	CONNECTION BEND *From serial number 20061200001 - 20184700378*	1	-
4	503600401	FILTER PLUG *Up to serial number - 20061199999*	1	-
4	537092201	TANK VENT ASSY *From serial number 20061200001 - 20184700378*	1	-
4	501873101	TANK VENT ASSY *Up to serial number - 20061199999*	1	-
4	501152901	TANK VENT ASSY *From serial number 20184700379 -*	1	-
5	503717601	THROTTLE CABLE ASSY -	1	-
6	720124020	PARALLEL PIN -	1	-
7	503556601	THROTTLE LOCKOUT -	1	-
8	503736401	SPRING	1	-

Ref.	Article N.	Description	Qty	Kit
		-		
9	503829801	TRIGGER -	1	-
10	720127220	PARALLEL PIN -	1	-
11	503895601	ANTIVIBRATION ELEMENT *Std*	1	-
11	503895602	ANTIVIBRATION ELEMENT *Hard*	1	-
12	537215207	TANK CAP ASSY -	1	-
13	503578901	HOLDER -	1	-
14	589241101	GASKET -	1	-
15	581756202	FUEL HOSE -	1	-
16	503443201	FUEL FILTER -	1	-
17	503637603	ANTIVIBRATION ELEMENT *Std*	1	-
17	503637604	ANTIVIBRATION ELEMENT *Hard*	1	-
1	503628602	HANDLE *WRAP G No screws or antivibration element included.*	1	-
1	503628671	HANDLE *WRAP*	1	-
2	586443001	SCREW ITXSCFT -	5	-
3	586440001	SCREW ITXSCFT -	1	-
4	503684504	ANTIVIBRATION ELEMENT *WRAP G*	1	-
4	503637504	ANTIVIBRATION ELEMENT *Wrap*	1	-
5	537017201	SPIKE -	1	-
1	503626771	FRONT HANDLE ASSY -	1	-
2	586443001	SCREW ITXSCFT -	4	-
3	586440001	SCREW ITXSCFT -	1	-

Ref.	Article N.	Description	Qty	Kit
4	503637505	ANTIVIBRATION ELEMENT *Hard*	1	-
4	503637504	ANTIVIBRATION ELEMENT *Std*	1	-
1	503640201	SWITCH -	1	-
3	501430001	CABLE GROMMET -	1	-
4	501802403	STATOR ASSY -	1	-
5	586438502	SCREW ITXSCM -	3	-
6	503220401	NUT -	1	-
7	537051604	FLYWHEEL ASSY -	1	-
8	501673501	SPRING -	2	-
9	503230042	WASHER -	2	-
10	537015501	STARTER PAWL -	2	-
11	506006901	SCREW -	2	-
12	586505401	SCREW ITXCSRT -	2	-
13	503705901	HEATING PLATE -	1	-
14	503626772	FRONT HANDLE ASSY *G*	1	-
15	586443001	SCREW ITXSCFT -	4	-
16	586440001	SCREW ITXSCFT -	1	-
17	503684504	ANTIVIBRATION ELEMENT *G*	1	-
1	501485402	SPARK PLUG CAP -	1	-
2	586880304	IGNITION MODULE -	1	-
3	582029701	SCREW ITXSCM -	2	-
4	503718201	SWITCH	1	-

Ref.	Article N.	Description	Qty	Kit
		-		
5	503626101	CABLE -	1	-
6	503897601	CABLE -	1	-
7	525887402	SCREW CITXPANT -	1	-
8	503221011	HEXAGON NUT -	1	-
9	537051605	FLYWHEEL ASSY -	1	-
10	501673501	SPRING -	2	-
11	503230042	WASHER -	2	-
12	537015501	STARTER PAWL -	2	-
13	506006901	SCREW -	2	-
14	503230101	WASHER -	1	-
1	544029702	MUFFLER ASSY *DF*	1	-
2	724128759	SCREW CRPANM -	1	-
3	503766402	SPARK ARRESTER SCREEN -	1	-
4	525825101	SCREW ITXSCM -	2	-
5	579025901	SUPPORT -	1	-
6	503200774	SCREW IHSCFM -	2	-
7	503200702	SCREW IHSCFM -	2	-
8	544029501	MUFFLER ASSY *Tube*	1	-
8	544029502	MUFFLER ASSY *Jungle*	1	-
1	503628171	STARTER ASSY	1	-
2	586443101	SCREW ITXSCFT	1	-
3	503859601	STARTER PULLEY	1	-

Ref.	Article N.	Description	Qty	Kit
4	522037301	STARTER HANDLE	1	-
5	503432902	STARTER ROPE	1	-
6	537283602	RECOIL SPRING	1	-
7	503628202	STARTER HOUSING	1	-
8	537086701	BUSHING	1	-
9	501630601	SLEEVE	1	-
10	525824501	SCREW CITXPANMO	4	-
11	537230201	LABEL *XP*	1	-
11	537230206	LABEL *XPG*	1	-
12	503628301	AIR CONDUCTOR	1	-
2	537060401	RETAINER -	1	-
3	537189801	THERMOSTAT ASSY -	1	-
4	503554901	SWITCH -	1	-
5	537071402	FOIL ELEMENT -	1	-
7	537071802	STATOR ASSY -	1	-
8	586438502	SCREW ITXSCM -	3	-
9	503220401	NUT -	1	-
10	537051606	FLYWHEEL ASSY -	1	-
11	501673501	SPRING -	2	-
12	503230042	WASHER -	2	-
13	537015501	STARTER PAWL -	2	-
14	506006901	SCREW -	2	-
15	501430001	CABLE GROMMET -	1	-
16	503213801	SCREW CRCSRT -	2	-
17	503705901	HEATING PLATE -	1	-

Ref.	Article N.	Description	Qty	Kit
18	503626772	FRONT HANDLE ASSY *G*	1	-
19	503214972	SCREW IHSCFT -	4	-
20	586440001	SCREW ITXSCFT -	1	-
21	503684504	ANTIVIBRATION ELEMENT *G*	1	-

CYLINDER COVER

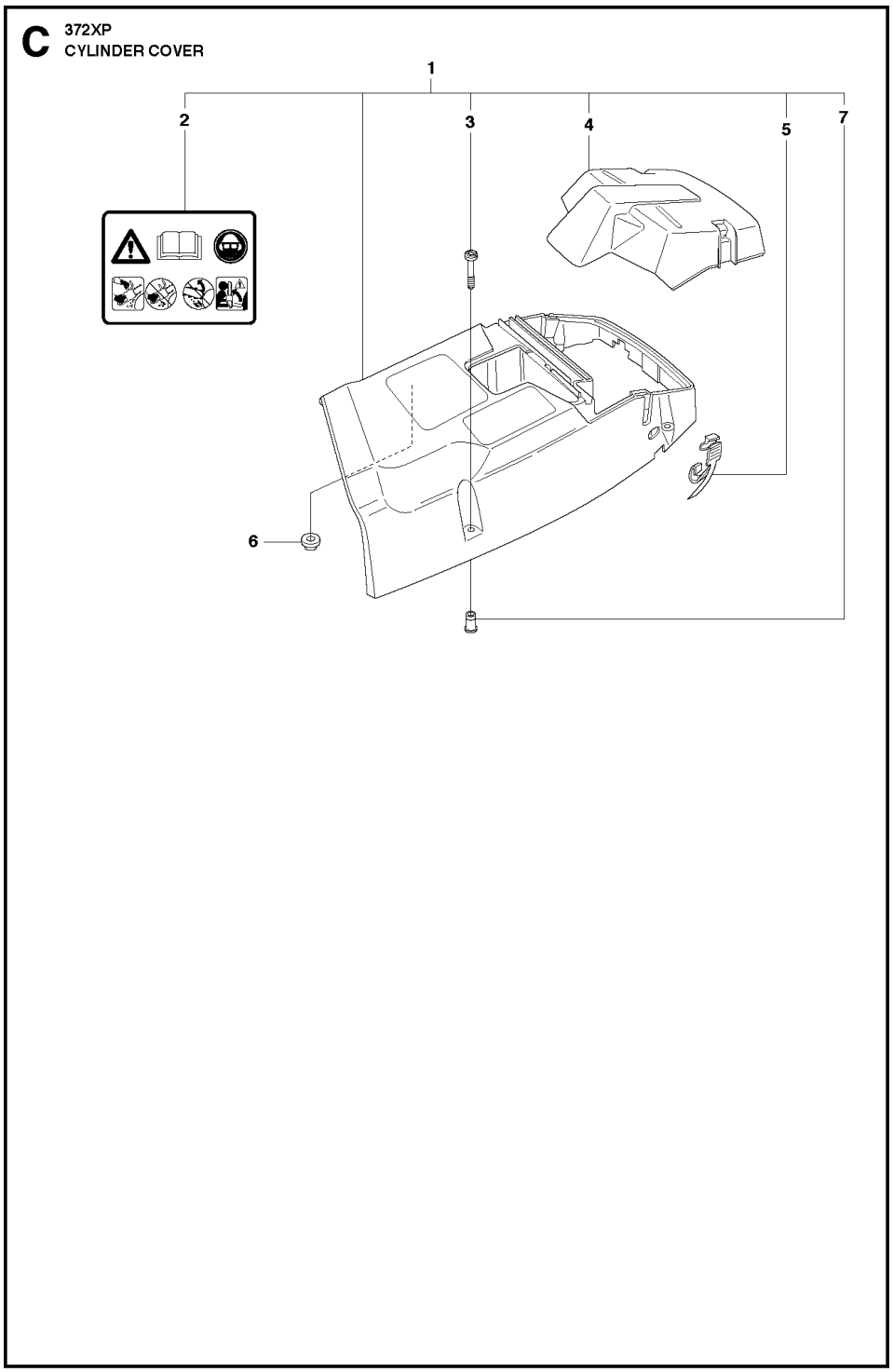

Ref.	Article N.	Description	Qty	Kit
1	588797401	TOOL -	1	-
2	501691701	COMBINATION WRENCH -	1	-
3	503558602	SPANNER *NV5*	1	-

Ref.	Article N.	Description	Qty	Kit
4	503558601	SPANNER *NV4*	1	-
5	503621201	GREASE -	1	-
6	501911401	GREASE GUN -	1	-
7	503969011	WINTER KIT *WINTER*	1	-
8	586505201	SCREW CITXPANT -	1	-
9	575880701	WRENCH *TORX T27/T20*	1	-
1	575269101	AIR FILTER ASSY *80µ*	1	-
1	575269103	AIR FILTER ASSY *Felt*	1	-
1	575269102	AIR FILTER ASSY *44µ*	1	-
2	503735401	CLAMP	1	-
3	537213204	KNOB	1	-
4	503818004	AIR FILTER *Felt*	1	-
4	503818005	AIR FILTER *80µ*	1	-
4	503818006	AIR FILTER *44µ*	1	-
5	503817801	FILTER HOLDER	1	-
6	731231401	HEXAGON NUT	1	-
7	581143001	SCREW ITXSCM	2	-
8	503701101	TUBE	2	-
9	503627502	FILTER HOLDER	1	-
10	503684101	LEVER	1	-
11	503667401	GUIDE BUSHING *Walbro HD-12B*	1	-
11	503665301	GUIDE BUSHING *Walbro HD-6B & HD-12C*	1	-
12	536033701	CARBURETTOR	1	-
13	503400606	IMPULSE HOSE	1	-
14	503431801	SUPPORT SLEEVE	1	-
15	503712701	FLANGE	1	-
16	503226503	SQUARE NUT	2	-

Ref.	Article N.	Description	Qty	Kit
17	503964501	INLET PIPE	1	-
17	503964502	INLET PIPE *For cold conditions*	1	-
18	505283309	HOSE CLAMP	1	-
1	536033701	CARBURETTOR	1	-
2	503647801	REPAIR KIT	1	-
3	501666101	SCREEN	1	-
4	503574201	PLUG	1	-
5	503563401	NEEDLE VALVE	1	-
6	501668301	LEVER	1	-
7	505520125	PIN	1	-
1	525755201	SCREW ITXSCFM -	4	-
2	503751103	HUB CAP -	1	-
3	525887402	SCREW CITXPANT -	1	-
4	501875303	KNEE JOINT -	1	-
5	586438501	SCREW ITXSCM -	1	-
6	503764903	HAND GUARD -	1	-
7	503436501	POSITION SPRING -	1	-
8	503838102	LOCK -	1	-
9	537008701	BRAKE LEVER -	1	-
10	503775201	BUSHING -	1	-
11	503709902	BRAKE SPRING -	1	-
12	503792702	SUPPORT -	1	-
13	503752202	BRAKE BAND ASSY -	1	-
14	537033501	CLUTCH COVER ASSY -	1	-
15	537033571	CLUTCH COVER ASSY -	1	-
16	537033803	LABEL	1	-

Ref.	Article N.	Description	Qty	Kit
		-		
17	503762902	CHIP GUARD -	1	-
18	503897001	SLEEVE -	1	-
19	525887402	SCREW CITXPANT -	1	-
20	525887402	SCREW CITXPANT -	2	-
21	537044102	CHAIN TENSIONER -	1	-
22	537016801	COVER -	1	-
23	503230066	WASHER -	1	-
24	537079502	WORM SCREW -	1	-
25	503998301	PAWL -	1	-
26	537017401	BEARING SLEEVE -	1	-
27	537079402	WORM WHEEL -	1	-
28	503230063	WASHER -	1	-
29	740480702	O-RING -	1	-
30	501517201	CHAIN GUIDE -	1	-
31	503220001	HEXAGON NUT -	2	-
31	503220010	NUT *30 pcs, plastic bag of 503220001*	1	-
32	525887402	SCREW CITXPANT -	1	-
33	503922701	SPIKE *372 WRAP*	1	-
34	503719701	SPIKE -	1	-
1	503521303	OIL PUMP ASSY -	1	-
2	503624901	SEALING PLUG -	1	-

Ref.	Article N.	Description	Qty	Kit
3	503521501	PUMP PISTON -	1	-
4	503230004	WASHER -	2	-
5	501615801	SPRING -	1	-
6	503813001	SPRING -	1	-
7	503811301	SCREW -	1	-
8	525824912	SCREW ITXSCM -	2	-
9	537207807	PUMP PINION -	1	-
10	503774301	OIL PIPE -	1	-
11	503644701	BUSHING *Up to serial number 20182009999*	1	-
11	587291801	OIL PRESSURE HOSE *From serial number 20182100001*	1	-
12	504300026	SEALING -	1	-
13	503426701	OIL HOSE -	1	-
14	501544102	OIL SCREEN -	1	-
15	503272101	E-CLIP -	1	-
16	503752401	WASHER -	1	-
17	586980602	CLUTCH DRUM ASSY *3/8x8T*	1	-
17	586980601	CLUTCH DRUM ASSY *3/8x7T*	1	-
18	501598002	RIM SPROCKET *3/8x7T*	1	-
18	505303661	RIM SPROCKET *3/8x8T*	1	-
19	503432001	NEEDLE HOLDER *3/8*	1	-
20	586798401	CLUTCH ASSY -	1	-
21	537360601	CLUTCH SPRING	3	-

Ref.	Article N.	Description	Qty	Kit
		-		
22	503230059	WASHER -	1	-
1	503626819	CRANKCASE ASSY -	1	-
2	503967001	BUSHING -	1	-
3	503260301	SEALING RING -	1	-
4	503751801	PIN -	1	-
5	501270801	GUIDE BUSHING -	1	-
6	501270801	GUIDE BUSHING -	1	-
7	537051301	BAR BOLT -	2	-
8	525887402	SCREW CITXPANT -	1	-
9	537013702	CHAIN GUIDE PLATE *From serial number 20182100001*	1	-
9	537046601	KIT *Up to serial number 20182009999*	1	-
10	586445401	SCREW ITXSCM -	1	-
11	525755201	SCREW ITXSCFM -	4	-
12	588093701	CARBURETTOR AREA BASE -	1	-
13	503734401	GROMMET -	1	-
14	503627701	CHOKE CONTROL -	1	-
15	579468901	SUPPORT -	1	-
16	537095401	GROMMET -	1	-
17	525824913	SCREW ITXSCM -	2	-
18	501686801	CHAIN CATCHER -	1	-
19	503627201	GASKET -	1	-

Ref.	Article N.	Description	Qty	Kit
20	503857301	COVER -	1	-
21	505275719	SEALING RING -	1	-
22	503628401	AIR NOZZLE -	1	-
23	525755201	SCREW ITXSCFM -	1	-
24	503846101	BUFFER -	1	-
25	537215207	TANK CAP ASSY -	1	-
26	503578901	HOLDER -	1	-
27	589241101	GASKET -	1	-
28	575791202	SCREW ITXSCM -	6	-
29	537403501	FILTER -	1	-
30	530026119	CHECK VALVE -	1	-
31	537042901	BUMPER -	1	-
32	525755103	SCREW ITXSCFM -	1	-
33	537024401	WEAR PROTECTION -	1	-
34	537089201	CHAIN CATCHER -	1	-
35	575793501	SCREW ITXPANM -	2	-
36	537017101	SPIKE -	1	-
37	503222401	LOCK NUT -	1	-
38	503647902	SPIKE -	1	-
39	503647201	GASKET KIT *A = Set of gaskets*	1	-
1	503748705	CRANKSHAFT ASSY -	1	-
2	586798401	CLUTCH ASSY	1	-

Ref.	Article N.	Description	Qty	Kit
		-		
3	503779101	SLEEVE -	1	-
4	503263019	O-RING -	1	-
5	585975001	BALL BEARING -	2	-
6	577572401	NEEDLE BEARING -	1	-
1	503627807	CYLINDER COVER ASSY *Std*	1	-
1	503627808	CYLINDER COVER ASSY *Hd*	1	-
2	503987401	LABEL -	1	-
3	525887001	SCREW CITXPANMO -	3	-
4	503817701	FILTER COVER *Hd*	1	-
4	503628001	FILTER COVER *Std*	1	-
5	503740102	SNAP LOCKING -	2	-
6	537016501	SUPPORT -	1	-
7	537055903	SLEEVE -	3	-
1	503939372	CYLINDER ASSY *EPA*	1	-
1	503626473	CYLINDER ASSY -	1	-
2	503939271	PISTON ASSY *EPA*	1	-
2	503691271	PISTON ASSY -	1	-
3	503552201	PLUG -	1	-
4	577572401	NEEDLE BEARING -	1	-
5	503715301	DECOMPRESSION VALVE -	1	-
6	525824903	SCREW ITXSCM -	4	-

Ref.	Article N.	Description	Qty	Kit
7	503235111	SPARK PLUG *BPMR7A*	1	-
8	503961501	GASKET -	1	-
9	503289036	PISTON RING *EPA*	2	-
9	503289042	PISTON RING -	1	-
10	737431200	SNAP RING -	2	-
11	503775901	GASKET -	1	-
12	503775802	HEAT DEFLECTOR -	1	-
13	503647201	GASKET KIT *A = Set of gaskets*	1	-
1	544114013	FUEL TANK -	1	-
2	581756106	FUEL HOSE -	1	-
3	537099301	CONNECTION BEND *From serial number 20061200001 - 20184700378*	1	-
4	503600401	FILTER PLUG *Up to serial number - 20061199999*	1	-
4	537092201	TANK VENT ASSY *From serial number 20061200001 - 20184700378*	1	-
4	501873101	TANK VENT ASSY *Up to serial number - 20061199999*	1	-
4	501152901	TANK VENT ASSY *From serial number 20184700379 -*	1	-
5	503717601	THROTTLE CABLE ASSY -	1	-
6	720124020	PARALLEL PIN -	1	-
7	503556601	THROTTLE LOCKOUT -	1	-
8	503736401	SPRING -	1	-
9	503829801	TRIGGER -	1	-
10	720127220	PARALLEL PIN -	1	-
11	503895601	ANTIVIBRATION ELEMENT	1	-

Ref.	Article N.	Description	Qty	Kit
		Std		
11	503895602	ANTIVIBRATION ELEMENT *Hard*	1	-
12	537215207	TANK CAP ASSY -	1	-
13	503578901	HOLDER -	1	-
14	589241101	GASKET -	1	-
15	581756202	FUEL HOSE -	1	-
16	503443201	FUEL FILTER -	1	-
17	503637603	ANTIVIBRATION ELEMENT *Std*	1	-
17	503637604	ANTIVIBRATION ELEMENT *Hard*	1	-
1	503628602	HANDLE *WRAP G No screws or antivibration element included.*	1	-
1	503628671	HANDLE *WRAP*	1	-
2	586443001	SCREW ITXSCFT -	5	-
3	586440001	SCREW ITXSCFT -	1	-
4	503684504	ANTIVIBRATION ELEMENT *WRAP G*	1	-
4	503637504	ANTIVIBRATION ELEMENT *Wrap*	1	-
5	537017201	SPIKE -	1	-
1	503626771	FRONT HANDLE ASSY -	1	-
2	586443001	SCREW ITXSCFT -	4	-
3	586440001	SCREW ITXSCFT -	1	-
4	503637505	ANTIVIBRATION ELEMENT *Hard*	1	-
4	503637504	ANTIVIBRATION ELEMENT *Std*	1	-
1	503640201	SWITCH -	1	-

Ref.	Article N.	Description	Qty	Kit
3	501430001	CABLE GROMMET -	1	-
4	501802403	STATOR ASSY -	1	-
5	586438502	SCREW ITXSCM -	3	-
6	503220401	NUT -	1	-
7	537051604	FLYWHEEL ASSY -	1	-
8	501673501	SPRING -	2	-
9	503230042	WASHER -	2	-
10	537015501	STARTER PAWL -	2	-
11	506006901	SCREW -	2	-
12	586505401	SCREW ITXCSRT -	2	-
13	503705901	HEATING PLATE -	1	-
14	503626772	FRONT HANDLE ASSY *G*	1	-
15	586443001	SCREW ITXSCFT -	4	-
16	586440001	SCREW ITXSCFT -	1	-
17	503684504	ANTIVIBRATION ELEMENT *G*	1	-
1	501485402	SPARK PLUG CAP -	1	-
2	586880304	IGNITION MODULE -	1	-
3	582029701	SCREW ITXSCM -	2	-
4	503718201	SWITCH -	1	-
5	503626101	CABLE -	1	-
6	503897601	CABLE -	1	-
7	525887402	SCREW CITXPANT	1	-

Ref.	Article N.	Description	Qty	Kit
		-		
8	503221011	HEXAGON NUT -	1	-
9	537051605	FLYWHEEL ASSY -	1	-
10	501673501	SPRING -	2	-
11	503230042	WASHER -	2	-
12	537015501	STARTER PAWL -	2	-
13	506006901	SCREW -	2	-
14	503230101	WASHER -	1	-
1	544029702	MUFFLER ASSY *DF*	1	-
2	724128759	SCREW CRPANM -	1	-
3	503766402	SPARK ARRESTER SCREEN -	1	-
4	525825101	SCREW ITXSCM -	2	-
5	579025901	SUPPORT -	1	-
6	503200774	SCREW IHSCFM -	2	-
7	503200702	SCREW IHSCFM -	2	-
8	544029501	MUFFLER ASSY *Tube*	1	-
8	544029502	MUFFLER ASSY *Jungle*	1	-
1	503628171	STARTER ASSY	1	-
2	586443101	SCREW ITXSCFT	1	-
3	503859601	STARTER PULLEY	1	-
4	522037301	STARTER HANDLE	1	-
5	503432902	STARTER ROPE	1	-
6	537283602	RECOIL SPRING	1	-
7	503628202	STARTER HOUSING	1	-
8	537086701	BUSHING	1	-
9	501630601	SLEEVE	1	-

Ref.	Article N.	Description	Qty	Kit
10	525824501	SCREW CITXPANMO	4	-
11	537230201	LABEL *XP*	1	-
11	537230206	LABEL *XPG*	1	-
12	503628301	AIR CONDUCTOR	1	-
2	537060401	RETAINER -	1	-
3	537189801	THERMOSTAT ASSY -	1	-
4	503554901	SWITCH -	1	-
5	537071402	FOIL ELEMENT -	1	-
7	537071802	STATOR ASSY -	1	-
8	586438502	SCREW ITXSCM -	3	-
9	503220401	NUT -	1	-
10	537051606	FLYWHEEL ASSY -	1	-
11	501673501	SPRING -	2	-
12	503230042	WASHER -	2	-
13	537015501	STARTER PAWL -	2	-
14	506006901	SCREW -	2	-
15	501430001	CABLE GROMMET -	1	-
16	503213801	SCREW CRCSRT -	2	-
17	503705901	HEATING PLATE -	1	-
18	503626772	FRONT HANDLE ASSY *G*	1	-
19	503214972	SCREW IHSCFT -	4	-
20	586440001	SCREW ITXSCFT -	1	-
21	503684504	ANTIVIBRATION ELEMENT	1	-

Ref.	Article N.	Description	Qty	Kit
		G		

CYLINDER PISTON

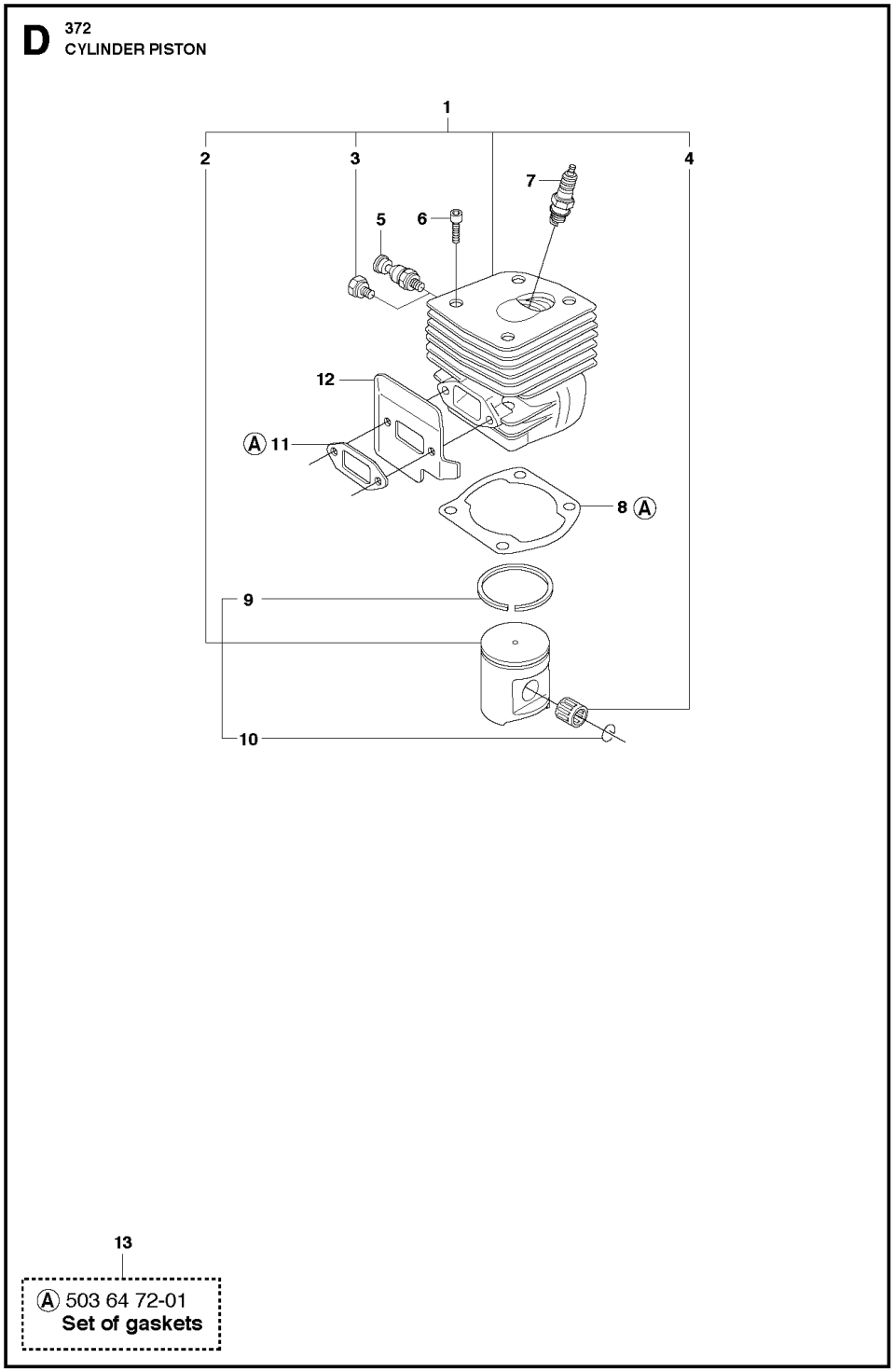

Ref.	Article N.	Description	Qty	Kit
1	588797401	TOOL -	1	-
2	501691701	COMBINATION WRENCH -	1	-
3	503558602	SPANNER *NV5*	1	-
4	503558601	SPANNER *NV4*	1	-
5	503621201	GREASE -	1	-
6	501911401	GREASE GUN -	1	-
7	503969011	WINTER KIT *WINTER*	1	-
8	586505201	SCREW CITXPANT -	1	-
9	575880701	WRENCH *TORX T27/T20*	1	-
1	575269101	AIR FILTER ASSY *80µ*	1	-
1	575269103	AIR FILTER ASSY *Felt*	1	-
1	575269102	AIR FILTER ASSY *44µ*	1	-
2	503735401	CLAMP	1	-
3	537213204	KNOB	1	-
4	503818004	AIR FILTER *Felt*	1	-
4	503818005	AIR FILTER *80µ*	1	-
4	503818006	AIR FILTER *44µ*	1	-
5	503817801	FILTER HOLDER	1	-
6	731231401	HEXAGON NUT	1	-
7	581143001	SCREW ITXSCM	2	-
8	503701101	TUBE	2	-
9	503627502	FILTER HOLDER	1	-
10	503684101	LEVER	1	-
11	503667401	GUIDE BUSHING *Walbro HD-12B*	1	-
11	503665301	GUIDE BUSHING *Walbro HD-6B & HD-12C*	1	-

Ref.	Article N.	Description	Qty	Kit
12	536033701	CARBURETTOR	1	-
13	503400606	IMPULSE HOSE	1	-
14	503431801	SUPPORT SLEEVE	1	-
15	503712701	FLANGE	1	-
16	503226503	SQUARE NUT	2	-
17	503964501	INLET PIPE	1	-
17	503964502	INLET PIPE *For cold conditions*	1	-
18	505283309	HOSE CLAMP	1	-
1	536033701	CARBURETTOR	1	-
2	503647801	REPAIR KIT	1	-
3	501666101	SCREEN	1	-
4	503574201	PLUG	1	-
5	503563401	NEEDLE VALVE	1	-
6	501668301	LEVER	1	-
7	505520125	PIN	1	-
1	525755201	SCREW ITXSCFM -	4	-
2	503751103	HUB CAP -	1	-
3	525887402	SCREW CITXPANT -	1	-
4	501875303	KNEE JOINT -	1	-
5	586438501	SCREW ITXSCM -	1	-
6	503764903	HAND GUARD -	1	-
7	503436501	POSITION SPRING -	1	-
8	503838102	LOCK -	1	-
9	537008701	BRAKE LEVER -	1	-
10	503775201	BUSHING -	1	-
11	503709902	BRAKE SPRING -	1	-
12	503792702	SUPPORT -	1	-
13	503752202	BRAKE BAND ASSY	1	-

Ref.	Article N.	Description	Qty	Kit
		-		
14	537033501	CLUTCH COVER ASSY -	1	-
15	537033571	CLUTCH COVER ASSY -	1	-
16	537033803	LABEL -	1	-
17	503762902	CHIP GUARD -	1	-
18	503897001	SLEEVE -	1	-
19	525887402	SCREW CITXPANT -	1	-
20	525887402	SCREW CITXPANT -	2	-
21	537044102	CHAIN TENSIONER -	1	-
22	537016801	COVER -	1	-
23	503230066	WASHER -	1	-
24	537079502	WORM SCREW -	1	-
25	503998301	PAWL -	1	-
26	537017401	BEARING SLEEVE -	1	-
27	537079402	WORM WHEEL -	1	-
28	503230063	WASHER -	1	-
29	740480702	O-RING -	1	-
30	501517201	CHAIN GUIDE -	1	-
31	503220001	HEXAGON NUT -	2	-
31	503220010	NUT *30 pcs, plastic bag of 503220001*	1	-
32	525887402	SCREW CITXPANT -	1	-
33	503922701	SPIKE *372 WRAP*	1	-

Ref.	Article N.	Description	Qty	Kit
34	503719701	SPIKE -	1	-
1	503521303	OIL PUMP ASSY -	1	-
2	503624901	SEALING PLUG -	1	-
3	503521501	PUMP PISTON -	1	-
4	503230004	WASHER -	2	-
5	501615801	SPRING -	1	-
6	503813001	SPRING -	1	-
7	503811301	SCREW -	1	-
8	525824912	SCREW ITXSCM -	2	-
9	537207807	PUMP PINION -	1	-
10	503774301	OIL PIPE -	1	-
11	503644701	BUSHING *Up to serial number 20182009999*	1	-
11	587291801	OIL PRESSURE HOSE *From serial number 20182100001*	1	-
12	504300026	SEALING -	1	-
13	503426701	OIL HOSE -	1	-
14	501544102	OIL SCREEN -	1	-
15	503272101	E-CLIP -	1	-
16	503752401	WASHER -	1	-
17	586980602	CLUTCH DRUM ASSY *3/8x8T*	1	-
17	586980601	CLUTCH DRUM ASSY *3/8x7T*	1	-
18	501598002	RIM SPROCKET *3/8x7T*	1	-
18	505303661	RIM SPROCKET	1	-

Ref.	Article N.	Description	Qty	Kit
		3/8x8T		
19	503432001	NEEDLE HOLDER *3/8*	1	-
20	586798401	CLUTCH ASSY -	1	-
21	537360601	CLUTCH SPRING -	3	-
22	503230059	WASHER -	1	-
1	503626819	CRANKCASE ASSY -	1	-
2	503967001	BUSHING -	1	-
3	503260301	SEALING RING -	1	-
4	503751801	PIN -	1	-
5	501270801	GUIDE BUSHING -	1	-
6	501270801	GUIDE BUSHING -	1	-
7	537051301	BAR BOLT -	2	-
8	525887402	SCREW CITXPANT -	1	-
9	537013702	CHAIN GUIDE PLATE *From serial number 20182100001*	1	-
9	537046601	KIT *Up to serial number 20182009999*	1	-
10	586445401	SCREW ITXSCM -	1	-
11	525755201	SCREW ITXSCFM -	4	-
12	588093701	CARBURETTOR AREA BASE -	1	-
13	503734401	GROMMET -	1	-
14	503627701	CHOKE CONTROL -	1	-
15	579468901	SUPPORT -	1	-
16	537095401	GROMMET -	1	-

Ref.	Article N.	Description	Qty	Kit
17	525824913	SCREW ITXSCM -	2	-
18	501686801	CHAIN CATCHER -	1	-
19	503627201	GASKET -	1	-
20	503857301	COVER -	1	-
21	505275719	SEALING RING -	1	-
22	503628401	AIR NOZZLE -	1	-
23	525755201	SCREW ITXSCFM -	1	-
24	503846101	BUFFER -	1	-
25	537215207	TANK CAP ASSY -	1	-
26	503578901	HOLDER -	1	-
27	589241101	GASKET -	1	-
28	575791202	SCREW ITXSCM -	6	-
29	537403501	FILTER -	1	-
30	530026119	CHECK VALVE -	1	-
31	537042901	BUMPER -	1	-
32	525755103	SCREW ITXSCFM -	1	-
33	537024401	WEAR PROTECTION -	1	-
34	537089201	CHAIN CATCHER -	1	-
35	575793501	SCREW ITXPANM -	2	-
36	537017101	SPIKE -	1	-
37	503222401	LOCK NUT -	1	-
38	503647902	SPIKE	1	-

Ref.	Article N.	Description	Qty	Kit
		-		
39	503647201	GASKET KIT *A = Set of gaskets*	1	-
1	503748705	CRANKSHAFT ASSY -	1	-
2	586798401	CLUTCH ASSY -	1	-
3	503779101	SLEEVE -	1	-
4	503263019	O-RING -	1	-
5	585975001	BALL BEARING -	2	-
6	577572401	NEEDLE BEARING -	1	-
1	503627807	CYLINDER COVER ASSY *Std*	1	-
1	503627808	CYLINDER COVER ASSY *Hd*	1	-
2	503987401	LABEL -	1	-
3	525887001	SCREW CITXPANMO -	3	-
4	503817701	FILTER COVER *Hd*	1	-
4	503628001	FILTER COVER *Std*	1	-
5	503740102	SNAP LOCKING -	2	-
6	537016501	SUPPORT -	1	-
7	537055903	SLEEVE -	3	-
1	503939372	CYLINDER ASSY *EPA*	1	-
1	503626473	CYLINDER ASSY -	1	-
2	503939271	PISTON ASSY *EPA*	1	-
2	503691271	PISTON ASSY -	1	-
3	503552201	PLUG -	1	-

Ref.	Article N.	Description	Qty	Kit
4	577572401	NEEDLE BEARING -	1	-
5	503715301	DECOMPRESSION VALVE -	1	-
6	525824903	SCREW ITXSCM -	4	-
7	503235111	SPARK PLUG *BPMR7A*	1	-
8	503961501	GASKET -	1	-
9	503289036	PISTON RING *EPA*	2	-
9	503289042	PISTON RING -	1	-
10	737431200	SNAP RING -	2	-
11	503775901	GASKET -	1	-
12	503775802	HEAT DEFLECTOR -	1	-
13	503647201	GASKET KIT *A = Set of gaskets*	1	-
1	544114013	FUEL TANK -	1	-
2	581756106	FUEL HOSE -	1	-
3	537099301	CONNECTION BEND *From serial number 20061200001 - 20184700378*	1	-
4	503600401	FILTER PLUG *Up to serial number - 20061199999*	1	-
4	537092201	TANK VENT ASSY *From serial number 20061200001 - 20184700378*	1	-
4	501873101	TANK VENT ASSY *Up to serial number - 20061199999*	1	-
4	501152901	TANK VENT ASSY *From serial number 20184700379 -*	1	-
5	503717601	THROTTLE CABLE ASSY -	1	-
6	720124020	PARALLEL PIN -	1	-
7	503556601	THROTTLE LOCKOUT -	1	-
8	503736401	SPRING	1	-

Ref.	Article N.	Description	Qty	Kit
		-		
9	503829801	TRIGGER -	1	-
10	720127220	PARALLEL PIN -	1	-
11	503895601	ANTIVIBRATION ELEMENT *Std*	1	-
11	503895602	ANTIVIBRATION ELEMENT *Hard*	1	-
12	537215207	TANK CAP ASSY -	1	-
13	503578901	HOLDER -	1	-
14	589241101	GASKET -	1	-
15	581756202	FUEL HOSE -	1	-
16	503443201	FUEL FILTER -	1	-
17	503637603	ANTIVIBRATION ELEMENT *Std*	1	-
17	503637604	ANTIVIBRATION ELEMENT *Hard*	1	-
1	503628602	HANDLE *WRAP G No screws or antivibration element included.*	1	-
1	503628671	HANDLE *WRAP*	1	-
2	586443001	SCREW ITXSCFT -	5	-
3	586440001	SCREW ITXSCFT -	1	-
4	503684504	ANTIVIBRATION ELEMENT *WRAP G*	1	-
4	503637504	ANTIVIBRATION ELEMENT *Wrap*	1	-
5	537017201	SPIKE -	1	-
1	503626771	FRONT HANDLE ASSY -	1	-
2	586443001	SCREW ITXSCFT -	4	-
3	586440001	SCREW ITXSCFT -	1	-

Ref.	Article N.	Description	Qty	Kit
4	503637505	ANTIVIBRATION ELEMENT *Hard*	1	-
4	503637504	ANTIVIBRATION ELEMENT *Std*	1	-
1	503640201	SWITCH -	1	-
3	501430001	CABLE GROMMET -	1	-
4	501802403	STATOR ASSY -	1	-
5	586438502	SCREW ITXSCM -	3	-
6	503220401	NUT -	1	-
7	537051604	FLYWHEEL ASSY -	1	-
8	501673501	SPRING -	2	-
9	503230042	WASHER -	2	-
10	537015501	STARTER PAWL -	2	-
11	506006901	SCREW -	2	-
12	586505401	SCREW ITXCSRT -	2	-
13	503705901	HEATING PLATE -	1	-
14	503626772	FRONT HANDLE ASSY *G*	1	-
15	586443001	SCREW ITXSCFT -	4	-
16	586440001	SCREW ITXSCFT -	1	-
17	503684504	ANTIVIBRATION ELEMENT *G*	1	-
1	501485402	SPARK PLUG CAP -	1	-
2	586880304	IGNITION MODULE -	1	-
3	582029701	SCREW ITXSCM -	2	-
4	503718201	SWITCH	1	-

Ref.	Article N.	Description	Qty	Kit
		-		
5	503626101	CABLE -	1	-
6	503897601	CABLE -	1	-
7	525887402	SCREW CITXPANT -	1	-
8	503221011	HEXAGON NUT -	1	-
9	537051605	FLYWHEEL ASSY -	1	-
10	501673501	SPRING -	2	-
11	503230042	WASHER -	2	-
12	537015501	STARTER PAWL -	2	-
13	506006901	SCREW -	2	-
14	503230101	WASHER -	1	-
1	544029702	MUFFLER ASSY *DF*	1	-
2	724128759	SCREW CRPANM -	1	-
3	503766402	SPARK ARRESTER SCREEN -	1	-
4	525825101	SCREW ITXSCM -	2	-
5	579025901	SUPPORT -	1	-
6	503200774	SCREW IHSCFM -	2	-
7	503200702	SCREW IHSCFM -	2	-
8	544029501	MUFFLER ASSY *Tube*	1	-
8	544029502	MUFFLER ASSY *Jungle*	1	-
1	503628171	STARTER ASSY	1	-
2	586443101	SCREW ITXSCFT	1	-
3	503859601	STARTER PULLEY	1	-

Ref.	Article N.	Description	Qty	Kit
4	522037301	STARTER HANDLE	1	-
5	503432902	STARTER ROPE	1	-
6	537283602	RECOIL SPRING	1	-
7	503628202	STARTER HOUSING	1	-
8	537086701	BUSHING	1	-
9	501630601	SLEEVE	1	-
10	525824501	SCREW CITXPANMO	4	-
11	537230201	LABEL *XP*	1	-
11	537230206	LABEL *XPG*	1	-
12	503628301	AIR CONDUCTOR	1	-
2	537060401	RETAINER -	1	-
3	537189801	THERMOSTAT ASSY -	1	-
4	503554901	SWITCH -	1	-
5	537071402	FOIL ELEMENT -	1	-
7	537071802	STATOR ASSY -	1	-
8	586438502	SCREW ITXSCM -	3	-
9	503220401	NUT -	1	-
10	537051606	FLYWHEEL ASSY -	1	-
11	501673501	SPRING -	2	-
12	503230042	WASHER -	2	-
13	537015501	STARTER PAWL -	2	-
14	506006901	SCREW -	2	-
15	501430001	CABLE GROMMET -	1	-
16	503213801	SCREW CRCSRT -	2	-
17	503705901	HEATING PLATE -	1	-

Ref.	Article N.	Description	Qty	Kit
18	503626772	FRONT HANDLE ASSY *G*	1	-
19	503214972	SCREW IHSCFT -	4	-
20	586440001	SCREW ITXSCFT -	1	-
21	503684504	ANTIVIBRATION ELEMENT *G*	1	-

FUEL TANK

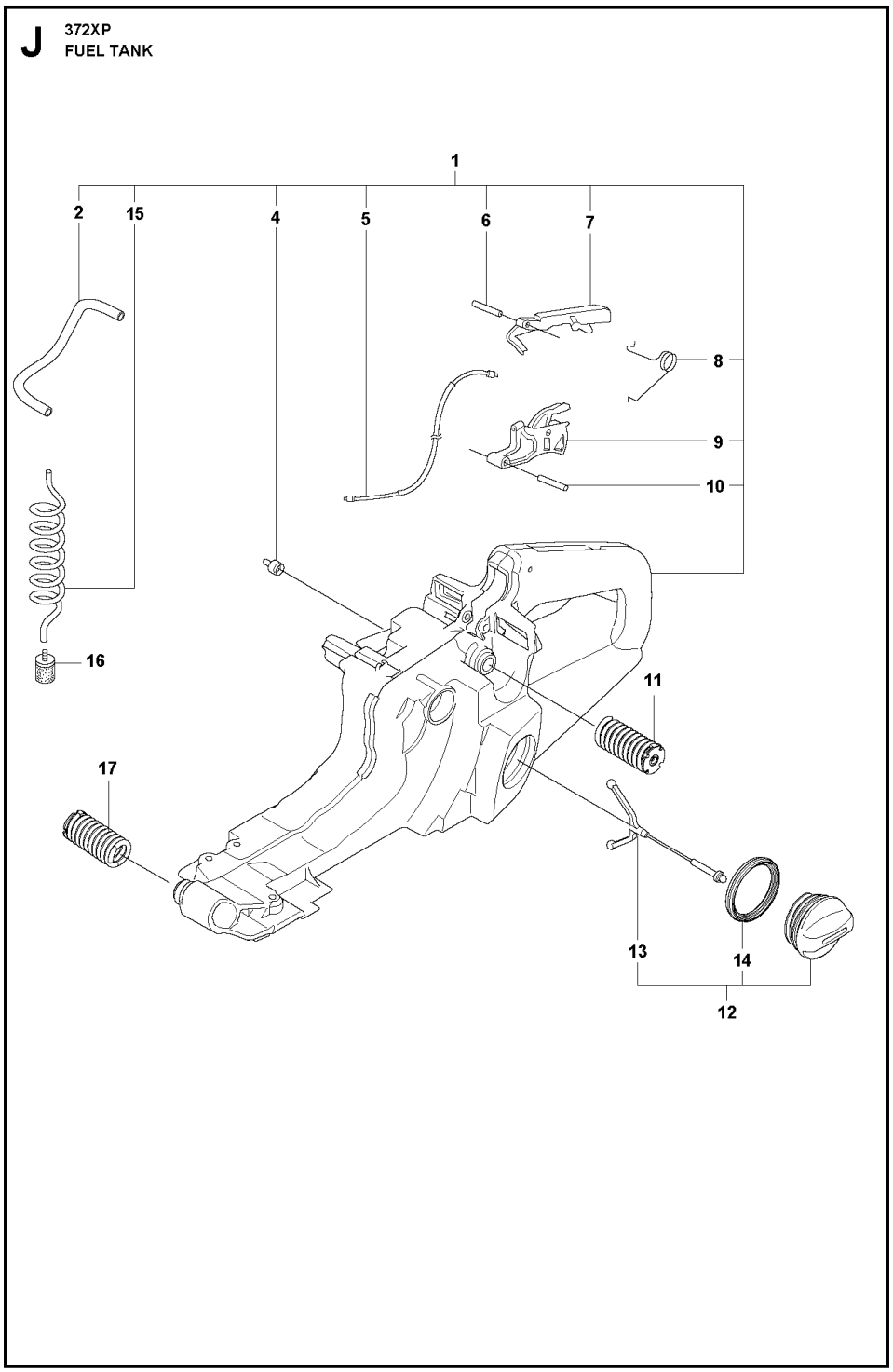

Ref.	Article N.	Description	Qty	Kit
1	588797401	TOOL -	1	-
2	501691701	COMBINATION WRENCH -	1	-
3	503558602	SPANNER *NV5*	1	-

Ref.	Article N.	Description	Qty	Kit
4	503558601	SPANNER *NV4*	1	-
5	503621201	GREASE -	1	-
6	501911401	GREASE GUN -	1	-
7	503969011	WINTER KIT *WINTER*	1	-
8	586505201	SCREW CITXPANT -	1	-
9	575880701	WRENCH *TORX T27/T20*	1	-
1	575269101	AIR FILTER ASSY *80µ*	1	-
1	575269103	AIR FILTER ASSY *Felt*	1	-
1	575269102	AIR FILTER ASSY *44µ*	1	-
2	503735401	CLAMP	1	-
3	537213204	KNOB	1	-
4	503818004	AIR FILTER *Felt*	1	-
4	503818005	AIR FILTER *80µ*	1	-
4	503818006	AIR FILTER *44µ*	1	-
5	503817801	FILTER HOLDER	1	-
6	731231401	HEXAGON NUT	1	-
7	581143001	SCREW ITXSCM	2	-
8	503701101	TUBE	2	-
9	503627502	FILTER HOLDER	1	-
10	503684101	LEVER	1	-
11	503667401	GUIDE BUSHING *Walbro HD-12B*	1	-
11	503665301	GUIDE BUSHING *Walbro HD-6B & HD-12C*	1	-
12	536033701	CARBURETTOR	1	-
13	503400606	IMPULSE HOSE	1	-
14	503431801	SUPPORT SLEEVE	1	-
15	503712701	FLANGE	1	-
16	503226503	SQUARE NUT	2	-

Ref.	Article N.	Description	Qty	Kit
17	503964501	INLET PIPE	1	-
17	503964502	INLET PIPE *For cold conditions*	1	-
18	505283309	HOSE CLAMP	1	-
1	536033701	CARBURETTOR	1	-
2	503647801	REPAIR KIT	1	-
3	501666101	SCREEN	1	-
4	503574201	PLUG	1	-
5	503563401	NEEDLE VALVE	1	-
6	501668301	LEVER	1	-
7	505520125	PIN	1	-
1	525755201	SCREW ITXSCFM -	4	-
2	503751103	HUB CAP -	1	-
3	525887402	SCREW CITXPANT -	1	-
4	501875303	KNEE JOINT -	1	-
5	586438501	SCREW ITXSCM -	1	-
6	503764903	HAND GUARD -	1	-
7	503436501	POSITION SPRING -	1	-
8	503838102	LOCK -	1	-
9	537008701	BRAKE LEVER -	1	-
10	503775201	BUSHING -	1	-
11	503709902	BRAKE SPRING -	1	-
12	503792702	SUPPORT -	1	-
13	503752202	BRAKE BAND ASSY -	1	-
14	537033501	CLUTCH COVER ASSY -	1	-
15	537033571	CLUTCH COVER ASSY -	1	-
16	537033803	LABEL	1	-

Ref.	Article N.	Description	Qty	Kit
		-		
17	503762902	CHIP GUARD -	1	-
18	503897001	SLEEVE -	1	-
19	525887402	SCREW CITXPANT -	1	-
20	525887402	SCREW CITXPANT -	2	-
21	537044102	CHAIN TENSIONER -	1	-
22	537016801	COVER -	1	-
23	503230066	WASHER -	1	-
24	537079502	WORM SCREW -	1	-
25	503998301	PAWL -	1	-
26	537017401	BEARING SLEEVE -	1	-
27	537079402	WORM WHEEL -	1	-
28	503230063	WASHER -	1	-
29	740480702	O-RING -	1	-
30	501517201	CHAIN GUIDE -	1	-
31	503220001	HEXAGON NUT -	2	-
31	503220010	NUT *30 pcs, plastic bag of 503220001*	1	-
32	525887402	SCREW CITXPANT -	1	-
33	503922701	SPIKE *372 WRAP*	1	-
34	503719701	SPIKE -	1	-
1	503521303	OIL PUMP ASSY -	1	-
2	503624901	SEALING PLUG -	1	-

Ref.	Article N.	Description	Qty	Kit
3	503521501	PUMP PISTON -	1	-
4	503230004	WASHER -	2	-
5	501615801	SPRING -	1	-
6	503813001	SPRING -	1	-
7	503811301	SCREW -	1	-
8	525824912	SCREW ITXSCM -	2	-
9	537207807	PUMP PINION -	1	-
10	503774301	OIL PIPE -	1	-
11	503644701	BUSHING *Up to serial number 20182009999*	1	-
11	587291801	OIL PRESSURE HOSE *From serial number 20182100001*	1	-
12	504300026	SEALING -	1	-
13	503426701	OIL HOSE -	1	-
14	501544102	OIL SCREEN -	1	-
15	503272101	E-CLIP -	1	-
16	503752401	WASHER -	1	-
17	586980602	CLUTCH DRUM ASSY *3/8x8T*	1	-
17	586980601	CLUTCH DRUM ASSY *3/8x7T*	1	-
18	501598002	RIM SPROCKET *3/8x7T*	1	-
18	505303661	RIM SPROCKET *3/8x8T*	1	-
19	503432001	NEEDLE HOLDER *3/8*	1	-
20	586798401	CLUTCH ASSY -	1	-
21	537360601	CLUTCH SPRING	3	-

Ref.	Article N.	Description	Qty	Kit
		-		
22	503230059	WASHER -	1	-
1	503626819	CRANKCASE ASSY -	1	-
2	503967001	BUSHING -	1	-
3	503260301	SEALING RING -	1	-
4	503751801	PIN -	1	-
5	501270801	GUIDE BUSHING -	1	-
6	501270801	GUIDE BUSHING -	1	-
7	537051301	BAR BOLT -	2	-
8	525887402	SCREW CITXPANT -	1	-
9	537013702	CHAIN GUIDE PLATE *From serial number 20182100001*	1	-
9	537046601	KIT *Up to serial number 20182009999*	1	-
10	586445401	SCREW ITXSCM -	1	-
11	525755201	SCREW ITXSCFM -	4	-
12	588093701	CARBURETTOR AREA BASE -	1	-
13	503734401	GROMMET -	1	-
14	503627701	CHOKE CONTROL -	1	-
15	579468901	SUPPORT -	1	-
16	537095401	GROMMET -	1	-
17	525824913	SCREW ITXSCM -	2	-
18	501686801	CHAIN CATCHER -	1	-
19	503627201	GASKET -	1	-

Ref.	Article N.	Description	Qty	Kit
20	503857301	COVER -	1	-
21	505275719	SEALING RING -	1	-
22	503628401	AIR NOZZLE -	1	-
23	525755201	SCREW ITXSCFM -	1	-
24	503846101	BUFFER -	1	-
25	537215207	TANK CAP ASSY -	1	-
26	503578901	HOLDER -	1	-
27	589241101	GASKET -	1	-
28	575791202	SCREW ITXSCM -	6	-
29	537403501	FILTER -	1	-
30	530026119	CHECK VALVE -	1	-
31	537042901	BUMPER -	1	-
32	525755103	SCREW ITXSCFM -	1	-
33	537024401	WEAR PROTECTION -	1	-
34	537089201	CHAIN CATCHER -	1	-
35	575793501	SCREW ITXPANM -	2	-
36	537017101	SPIKE -	1	-
37	503222401	LOCK NUT -	1	-
38	503647902	SPIKE -	1	-
39	503647201	GASKET KIT *A = Set of gaskets*	1	-
1	503748705	CRANKSHAFT ASSY -	1	-
2	586798401	CLUTCH ASSY	1	-

Ref.	Article N.	Description	Qty	Kit
		-		
3	503779101	SLEEVE -	1	-
4	503263019	O-RING -	1	-
5	585975001	BALL BEARING -	2	-
6	577572401	NEEDLE BEARING -	1	-
1	503627807	CYLINDER COVER ASSY *Std*	1	-
1	503627808	CYLINDER COVER ASSY *Hd*	1	-
2	503987401	LABEL -	1	-
3	525887001	SCREW CITXPANMO -	3	-
4	503817701	FILTER COVER *Hd*	1	-
4	503628001	FILTER COVER *Std*	1	-
5	503740102	SNAP LOCKING -	2	-
6	537016501	SUPPORT -	1	-
7	537055903	SLEEVE -	3	-
1	503939372	CYLINDER ASSY *EPA*	1	-
1	503626473	CYLINDER ASSY -	1	-
2	503939271	PISTON ASSY *EPA*	1	-
2	503691271	PISTON ASSY -	1	-
3	503552201	PLUG -	1	-
4	577572401	NEEDLE BEARING -	1	-
5	503715301	DECOMPRESSION VALVE -	1	-
6	525824903	SCREW ITXSCM -	4	-

Ref.	Article N.	Description	Qty	Kit
7	503235111	SPARK PLUG *BPMR7A*	1	-
8	503961501	GASKET -	1	-
9	503289036	PISTON RING *EPA*	2	-
9	503289042	PISTON RING -	1	-
10	737431200	SNAP RING -	2	-
11	503775901	GASKET -	1	-
12	503775802	HEAT DEFLECTOR -	1	-
13	503647201	GASKET KIT *A = Set of gaskets*	1	-
1	544114013	FUEL TANK -	1	-
2	581756106	FUEL HOSE -	1	-
3	537099301	CONNECTION BEND *From serial number 20061200001 - 20184700378*	1	-
4	503600401	FILTER PLUG *Up to serial number - 20061199999*	1	-
4	537092201	TANK VENT ASSY *From serial number 20061200001 - 20184700378*	1	-
4	501873101	TANK VENT ASSY *Up to serial number - 20061199999*	1	-
4	501152901	TANK VENT ASSY *From serial number 20184700379 -*	1	-
5	503717601	THROTTLE CABLE ASSY -	1	-
6	720124020	PARALLEL PIN -	1	-
7	503556601	THROTTLE LOCKOUT -	1	-
8	503736401	SPRING -	1	-
9	503829801	TRIGGER -	1	-
10	720127220	PARALLEL PIN -	1	-
11	503895601	ANTIVIBRATION ELEMENT	1	-

Ref.	Article N.	Description	Qty	Kit
		Std		
11	503895602	ANTIVIBRATION ELEMENT *Hard*	1	-
12	537215207	TANK CAP ASSY -	1	-
13	503578901	HOLDER -	1	-
14	589241101	GASKET -	1	-
15	581756202	FUEL HOSE -	1	-
16	503443201	FUEL FILTER -	1	-
17	503637603	ANTIVIBRATION ELEMENT *Std*	1	-
17	503637604	ANTIVIBRATION ELEMENT *Hard*	1	-
1	503628602	HANDLE *WRAP G No screws or antivibration element included.*	1	-
1	503628671	HANDLE *WRAP*	1	-
2	586443001	SCREW ITXSCFT -	5	-
3	586440001	SCREW ITXSCFT -	1	-
4	503684504	ANTIVIBRATION ELEMENT *WRAP G*	1	-
4	503637504	ANTIVIBRATION ELEMENT *Wrap*	1	-
5	537017201	SPIKE -	1	-
1	503626771	FRONT HANDLE ASSY -	1	-
2	586443001	SCREW ITXSCFT -	4	-
3	586440001	SCREW ITXSCFT -	1	-
4	503637505	ANTIVIBRATION ELEMENT *Hard*	1	-
4	503637504	ANTIVIBRATION ELEMENT *Std*	1	-
1	503640201	SWITCH -	1	-

Ref.	Article N.	Description	Qty	Kit
3	501430001	CABLE GROMMET -	1	-
4	501802403	STATOR ASSY -	1	-
5	586438502	SCREW ITXSCM -	3	-
6	503220401	NUT -	1	-
7	537051604	FLYWHEEL ASSY -	1	-
8	501673501	SPRING -	2	-
9	503230042	WASHER -	2	-
10	537015501	STARTER PAWL -	2	-
11	506006901	SCREW -	2	-
12	586505401	SCREW ITXCSRT -	2	-
13	503705901	HEATING PLATE -	1	-
14	503626772	FRONT HANDLE ASSY *G*	1	-
15	586443001	SCREW ITXSCFT -	4	-
16	586440001	SCREW ITXSCFT -	1	-
17	503684504	ANTIVIBRATION ELEMENT *G*	1	-
1	501485402	SPARK PLUG CAP -	1	-
2	586880304	IGNITION MODULE -	1	-
3	582029701	SCREW ITXSCM -	2	-
4	503718201	SWITCH -	1	-
5	503626101	CABLE -	1	-
6	503897601	CABLE -	1	-
7	525887402	SCREW CITXPANT	1	-

Ref.	Article N.	Description	Qty	Kit
		-		
8	503221011	HEXAGON NUT -	1	-
9	537051605	FLYWHEEL ASSY -	1	-
10	501673501	SPRING -	2	-
11	503230042	WASHER -	2	-
12	537015501	STARTER PAWL -	2	-
13	506006901	SCREW -	2	-
14	503230101	WASHER -	1	-
1	544029702	MUFFLER ASSY *DF*	1	-
2	724128759	SCREW CRPANM -	1	-
3	503766402	SPARK ARRESTER SCREEN -	1	-
4	525825101	SCREW ITXSCM -	2	-
5	579025901	SUPPORT -	1	-
6	503200774	SCREW IHSCFM -	2	-
7	503200702	SCREW IHSCFM -	2	-
8	544029501	MUFFLER ASSY *Tube*	1	-
8	544029502	MUFFLER ASSY *Jungle*	1	-
1	503628171	STARTER ASSY	1	-
2	586443101	SCREW ITXSCFT	1	-
3	503859601	STARTER PULLEY	1	-
4	522037301	STARTER HANDLE	1	-
5	503432902	STARTER ROPE	1	-
6	537283602	RECOIL SPRING	1	-
7	503628202	STARTER HOUSING	1	-
8	537086701	BUSHING	1	-
9	501630601	SLEEVE	1	-

Ref.	Article N.	Description	Qty	Kit
10	525824501	SCREW CITXPANMO	4	-
11	537230201	LABEL *XP*	1	-
11	537230206	LABEL *XPG*	1	-
12	503628301	AIR CONDUCTOR	1	-
2	537060401	RETAINER -	1	-
3	537189801	THERMOSTAT ASSY -	1	-
4	503554901	SWITCH -	1	-
5	537071402	FOIL ELEMENT -	1	-
7	537071802	STATOR ASSY -	1	-
8	586438502	SCREW ITXSCM -	3	-
9	503220401	NUT -	1	-
10	537051606	FLYWHEEL ASSY -	1	-
11	501673501	SPRING -	2	-
12	503230042	WASHER -	2	-
13	537015501	STARTER PAWL -	2	-
14	506006901	SCREW -	2	-
15	501430001	CABLE GROMMET -	1	-
16	503213801	SCREW CRCSRT -	2	-
17	503705901	HEATING PLATE -	1	-
18	503626772	FRONT HANDLE ASSY *G*	1	-
19	503214972	SCREW IHSCFT -	4	-
20	586440001	SCREW ITXSCFT -	1	-
21	503684504	ANTIVIBRATION ELEMENT	1	-

Ref.	Article N.	Description	Qty	Kit
		G		

HANDLE

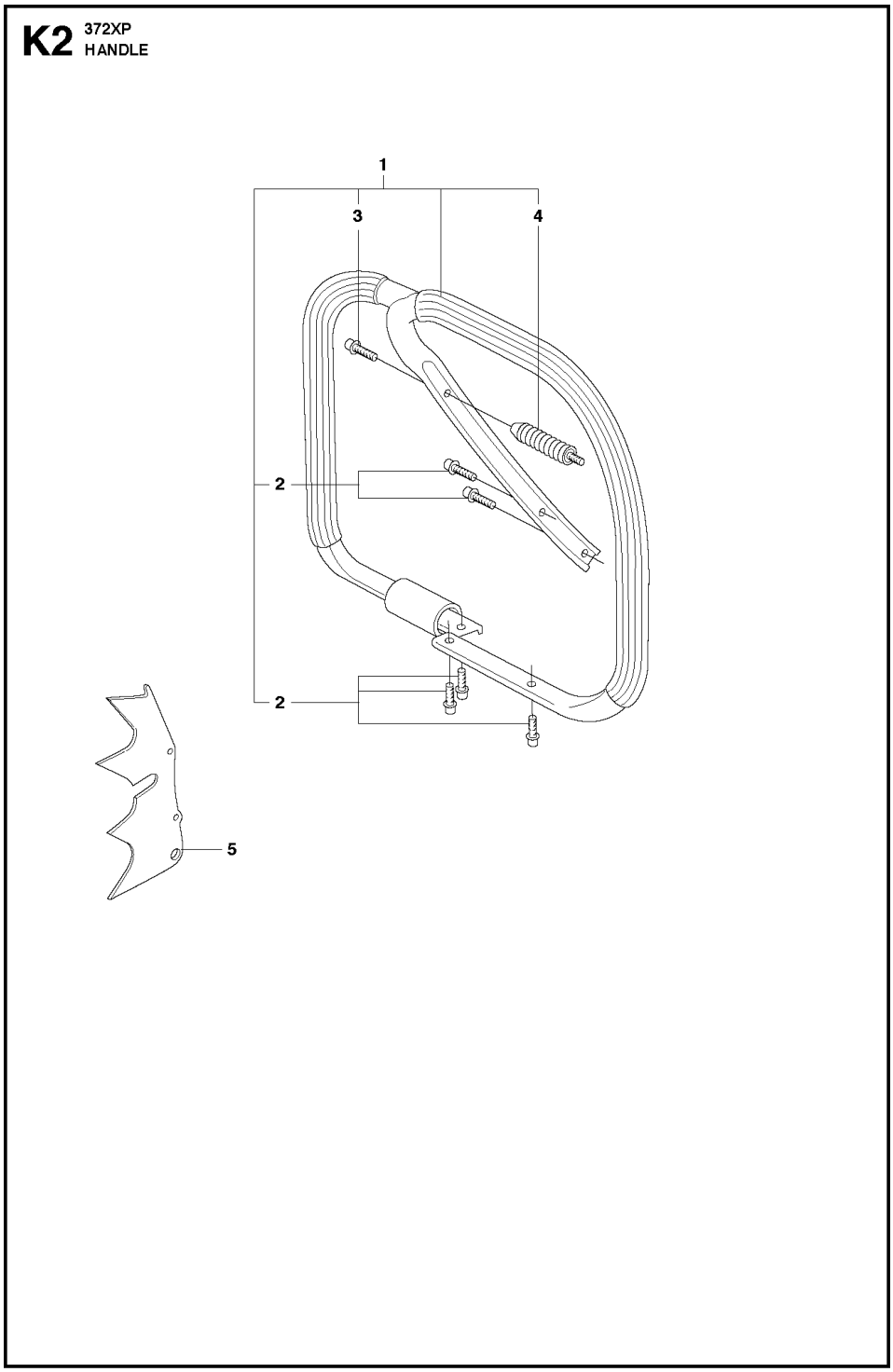

Ref.	Article N.	Description	Qty	Kit
1	588797401	TOOL -	1	-
2	501691701	COMBINATION WRENCH -	1	-
3	503558602	SPANNER *NV5*	1	-
4	503558601	SPANNER *NV4*	1	-
5	503621201	GREASE -	1	-
6	501911401	GREASE GUN -	1	-
7	503969011	WINTER KIT *WINTER*	1	-
8	586505201	SCREW CITXPANT -	1	-
9	575880701	WRENCH *TORX T27/T20*	1	-
1	575269101	AIR FILTER ASSY *80µ*	1	-
1	575269103	AIR FILTER ASSY *Felt*	1	-
1	575269102	AIR FILTER ASSY *44µ*	1	-
2	503735401	CLAMP	1	-
3	537213204	KNOB	1	-
4	503818004	AIR FILTER *Felt*	1	-
4	503818005	AIR FILTER *80µ*	1	-
4	503818006	AIR FILTER *44µ*	1	-
5	503817801	FILTER HOLDER	1	-
6	731231401	HEXAGON NUT	1	-
7	581143001	SCREW ITXSCM	2	-
8	503701101	TUBE	2	-
9	503627502	FILTER HOLDER	1	-
10	503684101	LEVER	1	-
11	503667401	GUIDE BUSHING *Walbro HD-12B*	1	-
11	503665301	GUIDE BUSHING *Walbro HD-6B & HD-12C*	1	-

Ref.	Article N.	Description	Qty	Kit
12	536033701	CARBURETTOR	1	-
13	503400606	IMPULSE HOSE	1	-
14	503431801	SUPPORT SLEEVE	1	-
15	503712701	FLANGE	1	-
16	503226503	SQUARE NUT	2	-
17	503964501	INLET PIPE	1	-
17	503964502	INLET PIPE *For cold conditions*	1	-
18	505283309	HOSE CLAMP	1	-
1	536033701	CARBURETTOR	1	-
2	503647801	REPAIR KIT	1	-
3	501666101	SCREEN	1	-
4	503574201	PLUG	1	-
5	503563401	NEEDLE VALVE	1	-
6	501668301	LEVER	1	-
7	505520125	PIN	1	-
1	525755201	SCREW ITXSCFM -	4	-
2	503751103	HUB CAP -	1	-
3	525887402	SCREW CITXPANT -	1	-
4	501875303	KNEE JOINT -	1	-
5	586438501	SCREW ITXSCM -	1	-
6	503764903	HAND GUARD -	1	-
7	503436501	POSITION SPRING -	1	-
8	503838102	LOCK -	1	-
9	537008701	BRAKE LEVER -	1	-
10	503775201	BUSHING -	1	-
11	503709902	BRAKE SPRING -	1	-
12	503792702	SUPPORT -	1	-
13	503752202	BRAKE BAND ASSY	1	-

Ref.	Article N.	Description	Qty	Kit
		-		
14	537033501	CLUTCH COVER ASSY -	1	-
15	537033571	CLUTCH COVER ASSY -	1	-
16	537033803	LABEL -	1	-
17	503762902	CHIP GUARD -	1	-
18	503897001	SLEEVE -	1	-
19	525887402	SCREW CITXPANT -	1	-
20	525887402	SCREW CITXPANT -	2	-
21	537044102	CHAIN TENSIONER -	1	-
22	537016801	COVER -	1	-
23	503230066	WASHER -	1	-
24	537079502	WORM SCREW -	1	-
25	503998301	PAWL -	1	-
26	537017401	BEARING SLEEVE -	1	-
27	537079402	WORM WHEEL -	1	-
28	503230063	WASHER -	1	-
29	740480702	O-RING -	1	-
30	501517201	CHAIN GUIDE -	1	-
31	503220001	HEXAGON NUT -	2	-
31	503220010	NUT *30 pcs, plastic bag of 503220001*	1	-
32	525887402	SCREW CITXPANT -	1	-
33	503922701	SPIKE *372 WRAP*	1	-

Ref.	Article N.	Description	Qty	Kit
34	503719701	SPIKE -	1	-
1	503521303	OIL PUMP ASSY -	1	-
2	503624901	SEALING PLUG -	1	-
3	503521501	PUMP PISTON -	1	-
4	503230004	WASHER -	2	-
5	501615801	SPRING -	1	-
6	503813001	SPRING -	1	-
7	503811301	SCREW -	1	-
8	525824912	SCREW ITXSCM -	2	-
9	537207807	PUMP PINION -	1	-
10	503774301	OIL PIPE -	1	-
11	503644701	BUSHING *Up to serial number 20182009999*	1	-
11	587291801	OIL PRESSURE HOSE *From serial number 20182100001*	1	-
12	504300026	SEALING -	1	-
13	503426701	OIL HOSE -	1	-
14	501544102	OIL SCREEN -	1	-
15	503272101	E-CLIP -	1	-
16	503752401	WASHER -	1	-
17	586980602	CLUTCH DRUM ASSY *3/8x8T*	1	-
17	586980601	CLUTCH DRUM ASSY *3/8x7T*	1	-
18	501598002	RIM SPROCKET *3/8x7T*	1	-
18	505303661	RIM SPROCKET	1	-

Ref.	Article N.	Description	Qty	Kit
		3/8x8T		
19	503432001	NEEDLE HOLDER *3/8*	1	-
20	586798401	CLUTCH ASSY -	1	-
21	537360601	CLUTCH SPRING -	3	-
22	503230059	WASHER -	1	-
1	503626819	CRANKCASE ASSY -	1	-
2	503967001	BUSHING -	1	-
3	503260301	SEALING RING -	1	-
4	503751801	PIN -	1	-
5	501270801	GUIDE BUSHING -	1	-
6	501270801	GUIDE BUSHING -	1	-
7	537051301	BAR BOLT -	2	-
8	525887402	SCREW CITXPANT -	1	-
9	537013702	CHAIN GUIDE PLATE *From serial number 20182100001*	1	-
9	537046601	KIT *Up to serial number 20182009999*	1	-
10	586445401	SCREW ITXSCM -	1	-
11	525755201	SCREW ITXSCFM -	4	-
12	588093701	CARBURETTOR AREA BASE -	1	-
13	503734401	GROMMET -	1	-
14	503627701	CHOKE CONTROL -	1	-
15	579468901	SUPPORT -	1	-
16	537095401	GROMMET -	1	-

Ref.	Article N.	Description	Qty	Kit
17	525824913	SCREW ITXSCM -	2	-
18	501686801	CHAIN CATCHER -	1	-
19	503627201	GASKET -	1	-
20	503857301	COVER -	1	-
21	505275719	SEALING RING -	1	-
22	503628401	AIR NOZZLE -	1	-
23	525755201	SCREW ITXSCFM -	1	-
24	503846101	BUFFER -	1	-
25	537215207	TANK CAP ASSY -	1	-
26	503578901	HOLDER -	1	-
27	589241101	GASKET -	1	-
28	575791202	SCREW ITXSCM -	6	-
29	537403501	FILTER -	1	-
30	530026119	CHECK VALVE -	1	-
31	537042901	BUMPER -	1	-
32	525755103	SCREW ITXSCFM -	1	-
33	537024401	WEAR PROTECTION -	1	-
34	537089201	CHAIN CATCHER -	1	-
35	575793501	SCREW ITXPANM -	2	-
36	537017101	SPIKE -	1	-
37	503222401	LOCK NUT -	1	-
38	503647902	SPIKE	1	-

Ref.	Article N.	Description	Qty	Kit
		-		
39	503647201	GASKET KIT *A = Set of gaskets*	1	-
1	503748705	CRANKSHAFT ASSY -	1	-
2	586798401	CLUTCH ASSY -	1	-
3	503779101	SLEEVE -	1	-
4	503263019	O-RING -	1	-
5	585975001	BALL BEARING -	2	-
6	577572401	NEEDLE BEARING -	1	-
1	503627807	CYLINDER COVER ASSY *Std*	1	-
1	503627808	CYLINDER COVER ASSY *Hd*	1	-
2	503987401	LABEL -	1	-
3	525887001	SCREW CITXPANMO -	3	-
4	503817701	FILTER COVER *Hd*	1	-
4	503628001	FILTER COVER *Std*	1	-
5	503740102	SNAP LOCKING -	2	-
6	537016501	SUPPORT -	1	-
7	537055903	SLEEVE -	3	-
1	503939372	CYLINDER ASSY *EPA*	1	-
1	503626473	CYLINDER ASSY -	1	-
2	503939271	PISTON ASSY *EPA*	1	-
2	503691271	PISTON ASSY -	1	-
3	503552201	PLUG -	1	-

Ref.	Article N.	Description	Qty	Kit
4	577572401	NEEDLE BEARING -	1	-
5	503715301	DECOMPRESSION VALVE -	1	-
6	525824903	SCREW ITXSCM -	4	-
7	503235111	SPARK PLUG *BPMR7A*	1	-
8	503961501	GASKET -	1	-
9	503289036	PISTON RING *EPA*	2	-
9	503289042	PISTON RING -	1	-
10	737431200	SNAP RING -	2	-
11	503775901	GASKET -	1	-
12	503775802	HEAT DEFLECTOR -	1	-
13	503647201	GASKET KIT *A = Set of gaskets*	1	-
1	544114013	FUEL TANK -	1	-
2	581756106	FUEL HOSE -	1	-
3	537099301	CONNECTION BEND *From serial number 20061200001 - 20184700378*	1	-
4	503600401	FILTER PLUG *Up to serial number - 20061199999*	1	-
4	537092201	TANK VENT ASSY *From serial number 20061200001 - 20184700378*	1	-
4	501873101	TANK VENT ASSY *Up to serial number - 20061199999*	1	-
4	501152901	TANK VENT ASSY *From serial number 20184700379 -*	1	-
5	503717601	THROTTLE CABLE ASSY -	1	-
6	720124020	PARALLEL PIN -	1	-
7	503556601	THROTTLE LOCKOUT -	1	-
8	503736401	SPRING	1	-

Ref.	Article N.	Description	Qty	Kit
		-		
9	503829801	TRIGGER -	1	-
10	720127220	PARALLEL PIN -	1	-
11	503895601	ANTIVIBRATION ELEMENT *Std*	1	-
11	503895602	ANTIVIBRATION ELEMENT *Hard*	1	-
12	537215207	TANK CAP ASSY -	1	-
13	503578901	HOLDER -	1	-
14	589241101	GASKET -	1	-
15	581756202	FUEL HOSE -	1	-
16	503443201	FUEL FILTER -	1	-
17	503637603	ANTIVIBRATION ELEMENT *Std*	1	-
17	503637604	ANTIVIBRATION ELEMENT *Hard*	1	-
1	503628602	HANDLE *WRAP G No screws or antivibration element included.*	1	-
1	503628671	HANDLE *WRAP*	1	-
2	586443001	SCREW ITXSCFT -	5	-
3	586440001	SCREW ITXSCFT -	1	-
4	503684504	ANTIVIBRATION ELEMENT *WRAP G*	1	-
4	503637504	ANTIVIBRATION ELEMENT *Wrap*	1	-
5	537017201	SPIKE -	1	-
1	503626771	FRONT HANDLE ASSY -	1	-
2	586443001	SCREW ITXSCFT -	4	-
3	586440001	SCREW ITXSCFT -	1	-

Ref.	Article N.	Description	Qty	Kit
4	503637505	ANTIVIBRATION ELEMENT *Hard*	1	-
4	503637504	ANTIVIBRATION ELEMENT *Std*	1	-
1	503640201	SWITCH -	1	-
3	501430001	CABLE GROMMET -	1	-
4	501802403	STATOR ASSY -	1	-
5	586438502	SCREW ITXSCM -	3	-
6	503220401	NUT -	1	-
7	537051604	FLYWHEEL ASSY -	1	-
8	501673501	SPRING -	2	-
9	503230042	WASHER -	2	-
10	537015501	STARTER PAWL -	2	-
11	506006901	SCREW -	2	-
12	586505401	SCREW ITXCSRT -	2	-
13	503705901	HEATING PLATE -	1	-
14	503626772	FRONT HANDLE ASSY *G*	1	-
15	586443001	SCREW ITXSCFT -	4	-
16	586440001	SCREW ITXSCFT -	1	-
17	503684504	ANTIVIBRATION ELEMENT *G*	1	-
1	501485402	SPARK PLUG CAP -	1	-
2	586880304	IGNITION MODULE -	1	-
3	582029701	SCREW ITXSCM -	2	-
4	503718201	SWITCH	1	-

Ref.	Article N.	Description	Qty	Kit
		-		
5	503626101	CABLE -	1	-
6	503897601	CABLE -	1	-
7	525887402	SCREW CITXPANT -	1	-
8	503221011	HEXAGON NUT -	1	-
9	537051605	FLYWHEEL ASSY -	1	-
10	501673501	SPRING -	2	-
11	503230042	WASHER -	2	-
12	537015501	STARTER PAWL -	2	-
13	506006901	SCREW -	2	-
14	503230101	WASHER -	1	-
1	544029702	MUFFLER ASSY *DF*	1	-
2	724128759	SCREW CRPANM -	1	-
3	503766402	SPARK ARRESTER SCREEN -	1	-
4	525825101	SCREW ITXSCM -	2	-
5	579025901	SUPPORT -	1	-
6	503200774	SCREW IHSCFM -	2	-
7	503200702	SCREW IHSCFM -	2	-
8	544029501	MUFFLER ASSY *Tube*	1	-
8	544029502	MUFFLER ASSY *Jungle*	1	-
1	503628171	STARTER ASSY	1	-
2	586443101	SCREW ITXSCFT	1	-
3	503859601	STARTER PULLEY	1	-

Ref.	Article N.	Description	Qty	Kit
4	522037301	STARTER HANDLE	1	-
5	503432902	STARTER ROPE	1	-
6	537283602	RECOIL SPRING	1	-
7	503628202	STARTER HOUSING	1	-
8	537086701	BUSHING	1	-
9	501630601	SLEEVE	1	-
10	525824501	SCREW CITXPANMO	4	-
11	537230201	LABEL *XP*	1	-
11	537230206	LABEL *XPG*	1	-
12	503628301	AIR CONDUCTOR	1	-
2	537060401	RETAINER -	1	-
3	537189801	THERMOSTAT ASSY -	1	-
4	503554901	SWITCH -	1	-
5	537071402	FOIL ELEMENT -	1	-
7	537071802	STATOR ASSY -	1	-
8	586438502	SCREW ITXSCM -	3	-
9	503220401	NUT -	1	-
10	537051606	FLYWHEEL ASSY -	1	-
11	501673501	SPRING -	2	-
12	503230042	WASHER -	2	-
13	537015501	STARTER PAWL -	2	-
14	506006901	SCREW -	2	-
15	501430001	CABLE GROMMET -	1	-
16	503213801	SCREW CRCSRT -	2	-
17	503705901	HEATING PLATE -	1	-

Ref.	Article N.	Description	Qty	Kit
18	503626772	FRONT HANDLE ASSY *G*	1	-
19	503214972	SCREW IHSCFT -	4	-
20	586440001	SCREW ITXSCFT -	1	-
21	503684504	ANTIVIBRATION ELEMENT *G*	1	-

HANDLE

K1 372
HANDLE

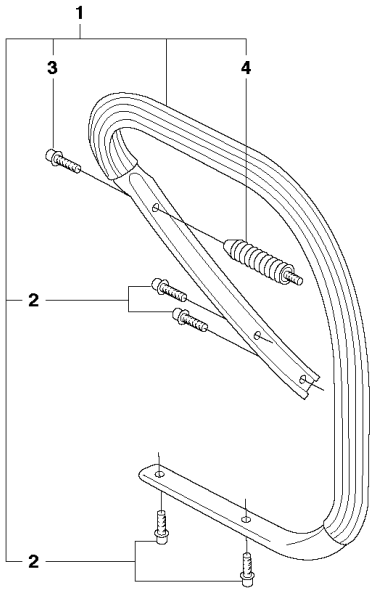

Ref.	Article N.	Description	Qty	Kit
1	588797401	TOOL -	1	-
2	501691701	COMBINATION WRENCH -	1	-
3	503558602	SPANNER *NV5*	1	-

Ref.	Article N.	Description	Qty	Kit
4	503558601	SPANNER *NV4*	1	-
5	503621201	GREASE -	1	-
6	501911401	GREASE GUN -	1	-
7	503969011	WINTER KIT *WINTER*	1	-
8	586505201	SCREW CITXPANT -	1	-
9	575880701	WRENCH *TORX T27/T20*	1	-
1	575269101	AIR FILTER ASSY *80µ*	1	-
1	575269103	AIR FILTER ASSY *Felt*	1	-
1	575269102	AIR FILTER ASSY *44µ*	1	-
2	503735401	CLAMP	1	-
3	537213204	KNOB	1	-
4	503818004	AIR FILTER *Felt*	1	-
4	503818005	AIR FILTER *80µ*	1	-
4	503818006	AIR FILTER *44µ*	1	-
5	503817801	FILTER HOLDER	1	-
6	731231401	HEXAGON NUT	1	-
7	581143001	SCREW ITXSCM	2	-
8	503701101	TUBE	2	-
9	503627502	FILTER HOLDER	1	-
10	503684101	LEVER	1	-
11	503667401	GUIDE BUSHING *Walbro HD-12B*	1	-
11	503665301	GUIDE BUSHING *Walbro HD-6B & HD-12C*	1	-
12	536033701	CARBURETTOR	1	-
13	503400606	IMPULSE HOSE	1	-
14	503431801	SUPPORT SLEEVE	1	-
15	503712701	FLANGE	1	-
16	503226503	SQUARE NUT	2	-

Ref.	Article N.	Description	Qty	Kit
17	503964501	INLET PIPE	1	-
17	503964502	INLET PIPE *For cold conditions*	1	-
18	505283309	HOSE CLAMP	1	-
1	536033701	CARBURETTOR	1	-
2	503647801	REPAIR KIT	1	-
3	501666101	SCREEN	1	-
4	503574201	PLUG	1	-
5	503563401	NEEDLE VALVE	1	-
6	501668301	LEVER	1	-
7	505520125	PIN	1	-
1	525755201	SCREW ITXSCFM -	4	-
2	503751103	HUB CAP -	1	-
3	525887402	SCREW CITXPANT -	1	-
4	501875303	KNEE JOINT -	1	-
5	586438501	SCREW ITXSCM -	1	-
6	503764903	HAND GUARD -	1	-
7	503436501	POSITION SPRING -	1	-
8	503838102	LOCK -	1	-
9	537008701	BRAKE LEVER -	1	-
10	503775201	BUSHING -	1	-
11	503709902	BRAKE SPRING -	1	-
12	503792702	SUPPORT -	1	-
13	503752202	BRAKE BAND ASSY -	1	-
14	537033501	CLUTCH COVER ASSY -	1	-
15	537033571	CLUTCH COVER ASSY -	1	-
16	537033803	LABEL	1	-

Ref.	Article N.	Description	Qty	Kit
		-		
17	503762902	CHIP GUARD -	1	-
18	503897001	SLEEVE -	1	-
19	525887402	SCREW CITXPANT -	1	-
20	525887402	SCREW CITXPANT -	2	-
21	537044102	CHAIN TENSIONER -	1	-
22	537016801	COVER -	1	-
23	503230066	WASHER -	1	-
24	537079502	WORM SCREW -	1	-
25	503998301	PAWL -	1	-
26	537017401	BEARING SLEEVE -	1	-
27	537079402	WORM WHEEL -	1	-
28	503230063	WASHER -	1	-
29	740480702	O-RING -	1	-
30	501517201	CHAIN GUIDE -	1	-
31	503220001	HEXAGON NUT -	2	-
31	503220010	NUT *30 pcs, plastic bag of 503220001*	1	-
32	525887402	SCREW CITXPANT -	1	-
33	503922701	SPIKE *372 WRAP*	1	-
34	503719701	SPIKE -	1	-
1	503521303	OIL PUMP ASSY -	1	-
2	503624901	SEALING PLUG -	1	-

Ref.	Article N.	Description	Qty	Kit
3	503521501	PUMP PISTON -	1	-
4	503230004	WASHER -	2	-
5	501615801	SPRING -	1	-
6	503813001	SPRING -	1	-
7	503811301	SCREW -	1	-
8	525824912	SCREW ITXSCM -	2	-
9	537207807	PUMP PINION -	1	-
10	503774301	OIL PIPE -	1	-
11	503644701	BUSHING *Up to serial number 20182009999*	1	-
11	587291801	OIL PRESSURE HOSE *From serial number 20182100001*	1	-
12	504300026	SEALING -	1	-
13	503426701	OIL HOSE -	1	-
14	501544102	OIL SCREEN -	1	-
15	503272101	E-CLIP -	1	-
16	503752401	WASHER -	1	-
17	586980602	CLUTCH DRUM ASSY *3/8x8T*	1	-
17	586980601	CLUTCH DRUM ASSY *3/8x7T*	1	-
18	501598002	RIM SPROCKET *3/8x7T*	1	-
18	505303661	RIM SPROCKET *3/8x8T*	1	-
19	503432001	NEEDLE HOLDER *3/8*	1	-
20	586798401	CLUTCH ASSY -	1	-
21	537360601	CLUTCH SPRING	3	-

Ref.	Article N.	Description	Qty	Kit
		-		
22	503230059	WASHER -	1	-
1	503626819	CRANKCASE ASSY -	1	-
2	503967001	BUSHING -	1	-
3	503260301	SEALING RING -	1	-
4	503751801	PIN -	1	-
5	501270801	GUIDE BUSHING -	1	-
6	501270801	GUIDE BUSHING -	1	-
7	537051301	BAR BOLT -	2	-
8	525887402	SCREW CITXPANT -	1	-
9	537013702	CHAIN GUIDE PLATE *From serial number 20182100001*	1	-
9	537046601	KIT *Up to serial number 20182009999*	1	-
10	586445401	SCREW ITXSCM -	1	-
11	525755201	SCREW ITXSCFM -	4	-
12	588093701	CARBURETTOR AREA BASE -	1	-
13	503734401	GROMMET -	1	-
14	503627701	CHOKE CONTROL -	1	-
15	579468901	SUPPORT -	1	-
16	537095401	GROMMET -	1	-
17	525824913	SCREW ITXSCM -	2	-
18	501686801	CHAIN CATCHER -	1	-
19	503627201	GASKET -	1	-

Ref.	Article N.	Description	Qty	Kit
20	503857301	COVER -	1	-
21	505275719	SEALING RING -	1	-
22	503628401	AIR NOZZLE -	1	-
23	525755201	SCREW ITXSCFM -	1	-
24	503846101	BUFFER -	1	-
25	537215207	TANK CAP ASSY -	1	-
26	503578901	HOLDER -	1	-
27	589241101	GASKET -	1	-
28	575791202	SCREW ITXSCM -	6	-
29	537403501	FILTER -	1	-
30	530026119	CHECK VALVE -	1	-
31	537042901	BUMPER -	1	-
32	525755103	SCREW ITXSCFM -	1	-
33	537024401	WEAR PROTECTION -	1	-
34	537089201	CHAIN CATCHER -	1	-
35	575793501	SCREW ITXPANM -	2	-
36	537017101	SPIKE -	1	-
37	503222401	LOCK NUT -	1	-
38	503647902	SPIKE -	1	-
39	503647201	GASKET KIT *A = Set of gaskets*	1	-
1	503748705	CRANKSHAFT ASSY -	1	-
2	586798401	CLUTCH ASSY	1	-

Ref.	Article N.	Description	Qty	Kit
		-		
3	503779101	SLEEVE -	1	-
4	503263019	O-RING -	1	-
5	585975001	BALL BEARING -	2	-
6	577572401	NEEDLE BEARING -	1	-
1	503627807	CYLINDER COVER ASSY *Std*	1	-
1	503627808	CYLINDER COVER ASSY *Hd*	1	-
2	503987401	LABEL -	1	-
3	525887001	SCREW CITXPANMO -	3	-
4	503817701	FILTER COVER *Hd*	1	-
4	503628001	FILTER COVER *Std*	1	-
5	503740102	SNAP LOCKING -	2	-
6	537016501	SUPPORT -	1	-
7	537055903	SLEEVE -	3	-
1	503939372	CYLINDER ASSY *EPA*	1	-
1	503626473	CYLINDER ASSY -	1	-
2	503939271	PISTON ASSY *EPA*	1	-
2	503691271	PISTON ASSY -	1	-
3	503552201	PLUG -	1	-
4	577572401	NEEDLE BEARING -	1	-
5	503715301	DECOMPRESSION VALVE -	1	-
6	525824903	SCREW ITXSCM -	4	-

Ref.	Article N.	Description	Qty	Kit
7	503235111	SPARK PLUG *BPMR7A*	1	-
8	503961501	GASKET -	1	-
9	503289036	PISTON RING *EPA*	2	-
9	503289042	PISTON RING -	1	-
10	737431200	SNAP RING -	2	-
11	503775901	GASKET -	1	-
12	503775802	HEAT DEFLECTOR -	1	-
13	503647201	GASKET KIT *A = Set of gaskets*	1	-
1	544114013	FUEL TANK -	1	-
2	581756106	FUEL HOSE -	1	-
3	537099301	CONNECTION BEND *From serial number 20061200001 - 20184700378*	1	-
4	503600401	FILTER PLUG *Up to serial number - 20061199999*	1	-
4	537092201	TANK VENT ASSY *From serial number 20061200001 - 20184700378*	1	-
4	501873101	TANK VENT ASSY *Up to serial number - 20061199999*	1	-
4	501152901	TANK VENT ASSY *From serial number 20184700379 -*	1	-
5	503717601	THROTTLE CABLE ASSY -	1	-
6	720124020	PARALLEL PIN -	1	-
7	503556601	THROTTLE LOCKOUT -	1	-
8	503736401	SPRING -	1	-
9	503829801	TRIGGER -	1	-
10	720127220	PARALLEL PIN -	1	-
11	503895601	ANTIVIBRATION ELEMENT	1	-

Ref.	Article N.	Description	Qty	Kit
		Std		
11	503895602	ANTIVIBRATION ELEMENT *Hard*	1	-
12	537215207	TANK CAP ASSY -	1	-
13	503578901	HOLDER -	1	-
14	589241101	GASKET -	1	-
15	581756202	FUEL HOSE -	1	-
16	503443201	FUEL FILTER -	1	-
17	503637603	ANTIVIBRATION ELEMENT *Std*	1	-
17	503637604	ANTIVIBRATION ELEMENT *Hard*	1	-
1	503628602	HANDLE *WRAP G No screws or antivibration element included.*	1	-
1	503628671	HANDLE *WRAP*	1	-
2	586443001	SCREW ITXSCFT -	5	-
3	586440001	SCREW ITXSCFT -	1	-
4	503684504	ANTIVIBRATION ELEMENT *WRAP G*	1	-
4	503637504	ANTIVIBRATION ELEMENT *Wrap*	1	-
5	537017201	SPIKE -	1	-
1	503626771	FRONT HANDLE ASSY -	1	-
2	586443001	SCREW ITXSCFT -	4	-
3	586440001	SCREW ITXSCFT -	1	-
4	503637505	ANTIVIBRATION ELEMENT *Hard*	1	-
4	503637504	ANTIVIBRATION ELEMENT *Std*	1	-
1	503640201	SWITCH -	1	-

Ref.	Article N.	Description	Qty	Kit
3	501430001	CABLE GROMMET -	1	-
4	501802403	STATOR ASSY -	1	-
5	586438502	SCREW ITXSCM -	3	-
6	503220401	NUT -	1	-
7	537051604	FLYWHEEL ASSY -	1	-
8	501673501	SPRING -	2	-
9	503230042	WASHER -	2	-
10	537015501	STARTER PAWL -	2	-
11	506006901	SCREW -	2	-
12	586505401	SCREW ITXCSRT -	2	-
13	503705901	HEATING PLATE -	1	-
14	503626772	FRONT HANDLE ASSY *G*	1	-
15	586443001	SCREW ITXSCFT -	4	-
16	586440001	SCREW ITXSCFT -	1	-
17	503684504	ANTIVIBRATION ELEMENT *G*	1	-
1	501485402	SPARK PLUG CAP -	1	-
2	586880304	IGNITION MODULE -	1	-
3	582029701	SCREW ITXSCM -	2	-
4	503718201	SWITCH -	1	-
5	503626101	CABLE -	1	-
6	503897601	CABLE -	1	-
7	525887402	SCREW CITXPANT	1	-

Ref.	Article N.	Description	Qty	Kit
		-		
8	503221011	HEXAGON NUT -	1	-
9	537051605	FLYWHEEL ASSY -	1	-
10	501673501	SPRING -	2	-
11	503230042	WASHER -	2	-
12	537015501	STARTER PAWL -	2	-
13	506006901	SCREW -	2	-
14	503230101	WASHER -	1	-
1	544029702	MUFFLER ASSY *DF*	1	-
2	724128759	SCREW CRPANM -	1	-
3	503766402	SPARK ARRESTER SCREEN -	1	-
4	525825101	SCREW ITXSCM -	2	-
5	579025901	SUPPORT -	1	-
6	503200774	SCREW IHSCFM -	2	-
7	503200702	SCREW IHSCFM -	2	-
8	544029501	MUFFLER ASSY *Tube*	1	-
8	544029502	MUFFLER ASSY *Jungle*	1	-
1	503628171	STARTER ASSY	1	-
2	586443101	SCREW ITXSCFT	1	-
3	503859601	STARTER PULLEY	1	-
4	522037301	STARTER HANDLE	1	-
5	503432902	STARTER ROPE	1	-
6	537283602	RECOIL SPRING	1	-
7	503628202	STARTER HOUSING	1	-
8	537086701	BUSHING	1	-
9	501630601	SLEEVE	1	-

Ref.	Article N.	Description	Qty	Kit
10	525824501	SCREW CITXPANMO	4	-
11	537230201	LABEL *XP*	1	-
11	537230206	LABEL *XPG*	1	-
12	503628301	AIR CONDUCTOR	1	-
2	537060401	RETAINER -	1	-
3	537189801	THERMOSTAT ASSY -	1	-
4	503554901	SWITCH -	1	-
5	537071402	FOIL ELEMENT -	1	-
7	537071802	STATOR ASSY -	1	-
8	586438502	SCREW ITXSCM -	3	-
9	503220401	NUT -	1	-
10	537051606	FLYWHEEL ASSY -	1	-
11	501673501	SPRING -	2	-
12	503230042	WASHER -	2	-
13	537015501	STARTER PAWL -	2	-
14	506006901	SCREW -	2	-
15	501430001	CABLE GROMMET -	1	-
16	503213801	SCREW CRCSRT -	2	-
17	503705901	HEATING PLATE -	1	-
18	503626772	FRONT HANDLE ASSY *G*	1	-
19	503214972	SCREW IHSCFT -	4	-
20	586440001	SCREW ITXSCFT -	1	-
21	503684504	ANTIVIBRATION ELEMENT	1	-

Ref.	Article N.	Description	Qty	Kit
		G		

HEATED HANDLES

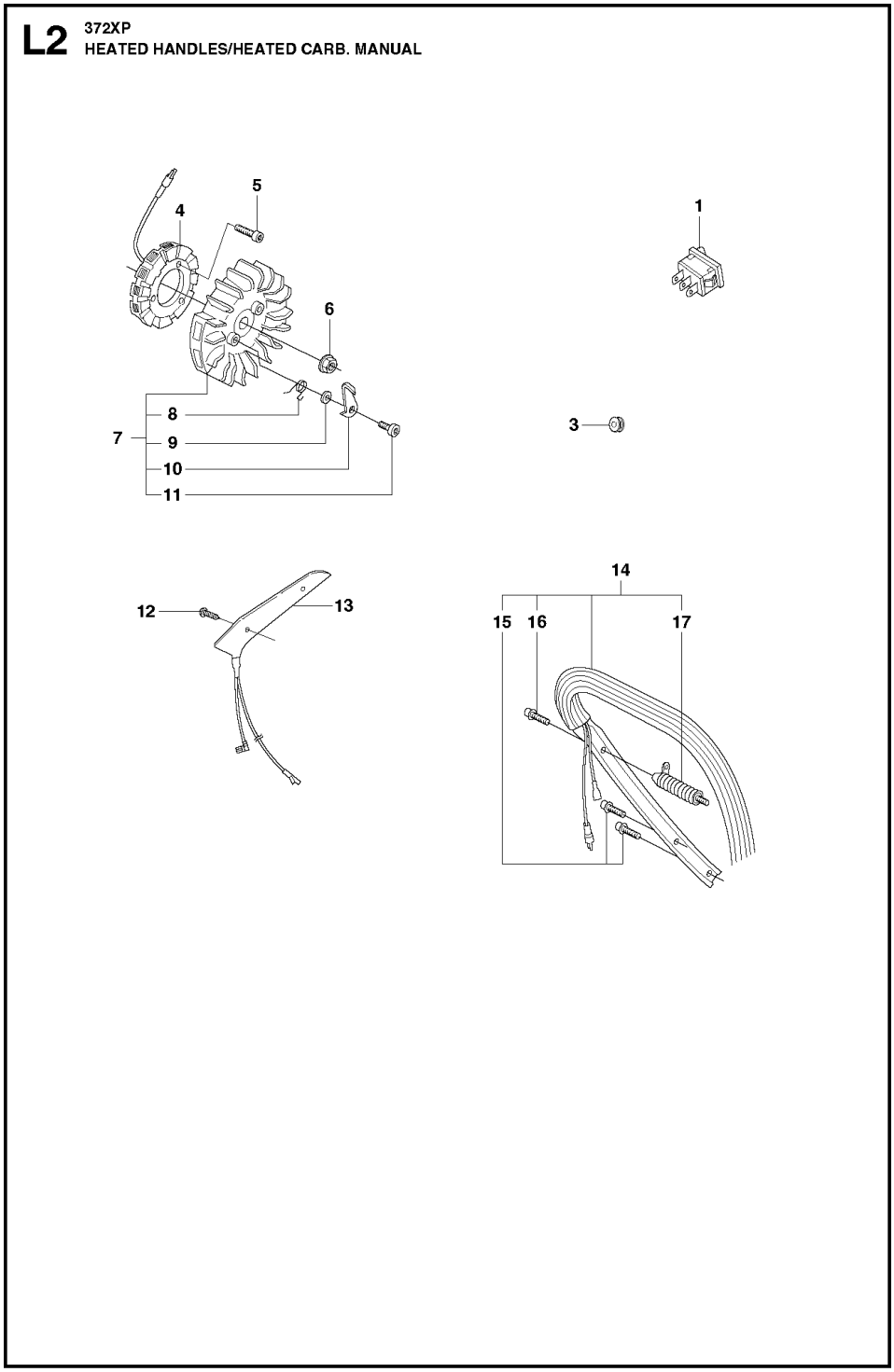

Ref.	Article N.	Description	Qty	Kit
1	588797401	TOOL -	1	-
2	501691701	COMBINATION WRENCH -	1	-
3	503558602	SPANNER *NV5*	1	-
4	503558601	SPANNER *NV4*	1	-
5	503621201	GREASE -	1	-
6	501911401	GREASE GUN -	1	-
7	503969011	WINTER KIT *WINTER*	1	-
8	586505201	SCREW CITXPANT -	1	-
9	575880701	WRENCH *TORX T27/T20*	1	-
1	575269101	AIR FILTER ASSY *80µ*	1	-
1	575269103	AIR FILTER ASSY *Felt*	1	-
1	575269102	AIR FILTER ASSY *44µ*	1	-
2	503735401	CLAMP	1	-
3	537213204	KNOB	1	-
4	503818004	AIR FILTER *Felt*	1	-
4	503818005	AIR FILTER *80µ*	1	-
4	503818006	AIR FILTER *44µ*	1	-
5	503817801	FILTER HOLDER	1	-
6	731231401	HEXAGON NUT	1	-
7	581143001	SCREW ITXSCM	2	-
8	503701101	TUBE	2	-
9	503627502	FILTER HOLDER	1	-
10	503684101	LEVER	1	-
11	503667401	GUIDE BUSHING *Walbro HD-12B*	1	-
11	503665301	GUIDE BUSHING *Walbro HD-6B & HD-12C*	1	-

Ref.	Article N.	Description	Qty	Kit
12	536033701	CARBURETTOR	1	-
13	503400606	IMPULSE HOSE	1	-
14	503431801	SUPPORT SLEEVE	1	-
15	503712701	FLANGE	1	-
16	503226503	SQUARE NUT	2	-
17	503964501	INLET PIPE	1	-
17	503964502	INLET PIPE *For cold conditions*	1	-
18	505283309	HOSE CLAMP	1	-
1	536033701	CARBURETTOR	1	-
2	503647801	REPAIR KIT	1	-
3	501666101	SCREEN	1	-
4	503574201	PLUG	1	-
5	503563401	NEEDLE VALVE	1	-
6	501668301	LEVER	1	-
7	505520125	PIN	1	-
1	525755201	SCREW ITXSCFM -	4	-
2	503751103	HUB CAP -	1	-
3	525887402	SCREW CITXPANT -	1	-
4	501875303	KNEE JOINT -	1	-
5	586438501	SCREW ITXSCM -	1	-
6	503764903	HAND GUARD -	1	-
7	503436501	POSITION SPRING -	1	-
8	503838102	LOCK -	1	-
9	537008701	BRAKE LEVER -	1	-
10	503775201	BUSHING -	1	-
11	503709902	BRAKE SPRING -	1	-
12	503792702	SUPPORT -	1	-
13	503752202	BRAKE BAND ASSY	1	-

Ref.	Article N.	Description	Qty	Kit
		-		
14	537033501	CLUTCH COVER ASSY -	1	-
15	537033571	CLUTCH COVER ASSY -	1	-
16	537033803	LABEL -	1	-
17	503762902	CHIP GUARD -	1	-
18	503897001	SLEEVE -	1	-
19	525887402	SCREW CITXPANT -	1	-
20	525887402	SCREW CITXPANT -	2	-
21	537044102	CHAIN TENSIONER -	1	-
22	537016801	COVER -	1	-
23	503230066	WASHER -	1	-
24	537079502	WORM SCREW -	1	-
25	503998301	PAWL -	1	-
26	537017401	BEARING SLEEVE -	1	-
27	537079402	WORM WHEEL -	1	-
28	503230063	WASHER -	1	-
29	740480702	O-RING -	1	-
30	501517201	CHAIN GUIDE -	1	-
31	503220001	HEXAGON NUT -	2	-
31	503220010	NUT *30 pcs, plastic bag of 503220001*	1	-
32	525887402	SCREW CITXPANT -	1	-
33	503922701	SPIKE *372 WRAP*	1	-

Ref.	Article N.	Description	Qty	Kit
34	503719701	SPIKE -	1	-
1	503521303	OIL PUMP ASSY -	1	-
2	503624901	SEALING PLUG -	1	-
3	503521501	PUMP PISTON -	1	-
4	503230004	WASHER -	2	-
5	501615801	SPRING -	1	-
6	503813001	SPRING -	1	-
7	503811301	SCREW -	1	-
8	525824912	SCREW ITXSCM -	2	-
9	537207807	PUMP PINION -	1	-
10	503774301	OIL PIPE -	1	-
11	503644701	BUSHING *Up to serial number 20182009999*	1	-
11	587291801	OIL PRESSURE HOSE *From serial number 20182100001*	1	-
12	504300026	SEALING -	1	-
13	503426701	OIL HOSE -	1	-
14	501544102	OIL SCREEN -	1	-
15	503272101	E-CLIP -	1	-
16	503752401	WASHER -	1	-
17	586980602	CLUTCH DRUM ASSY *3/8x8T*	1	-
17	586980601	CLUTCH DRUM ASSY *3/8x7T*	1	-
18	501598002	RIM SPROCKET *3/8x7T*	1	-
18	505303661	RIM SPROCKET	1	-

Ref.	Article N.	Description	Qty	Kit
		3/8x8T		
19	503432001	NEEDLE HOLDER *3/8*	1	-
20	586798401	CLUTCH ASSY -	1	-
21	537360601	CLUTCH SPRING -	3	-
22	503230059	WASHER -	1	-
1	503626819	CRANKCASE ASSY -	1	-
2	503967001	BUSHING -	1	-
3	503260301	SEALING RING -	1	-
4	503751801	PIN -	1	-
5	501270801	GUIDE BUSHING -	1	-
6	501270801	GUIDE BUSHING -	1	-
7	537051301	BAR BOLT -	2	-
8	525887402	SCREW CITXPANT -	1	-
9	537013702	CHAIN GUIDE PLATE *From serial number 20182100001*	1	-
9	537046601	KIT *Up to serial number 20182009999*	1	-
10	586445401	SCREW ITXSCM -	1	-
11	525755201	SCREW ITXSCFM -	4	-
12	588093701	CARBURETTOR AREA BASE -	1	-
13	503734401	GROMMET -	1	-
14	503627701	CHOKE CONTROL -	1	-
15	579468901	SUPPORT -	1	-
16	537095401	GROMMET -	1	-

Ref.	Article N.	Description	Qty	Kit
17	525824913	SCREW ITXSCM -	2	-
18	501686801	CHAIN CATCHER -	1	-
19	503627201	GASKET -	1	-
20	503857301	COVER -	1	-
21	505275719	SEALING RING -	1	-
22	503628401	AIR NOZZLE -	1	-
23	525755201	SCREW ITXSCFM -	1	-
24	503846101	BUFFER -	1	-
25	537215207	TANK CAP ASSY -	1	-
26	503578901	HOLDER -	1	-
27	589241101	GASKET -	1	-
28	575791202	SCREW ITXSCM -	6	-
29	537403501	FILTER -	1	-
30	530026119	CHECK VALVE -	1	-
31	537042901	BUMPER -	1	-
32	525755103	SCREW ITXSCFM -	1	-
33	537024401	WEAR PROTECTION -	1	-
34	537089201	CHAIN CATCHER -	1	-
35	575793501	SCREW ITXPANM -	2	-
36	537017101	SPIKE -	1	-
37	503222401	LOCK NUT -	1	-
38	503647902	SPIKE	1	-

Ref.	Article N.	Description	Qty	Kit
		-		
39	503647201	GASKET KIT *A = Set of gaskets*	1	-
1	503748705	CRANKSHAFT ASSY -	1	-
2	586798401	CLUTCH ASSY -	1	-
3	503779101	SLEEVE -	1	-
4	503263019	O-RING -	1	-
5	585975001	BALL BEARING -	2	-
6	577572401	NEEDLE BEARING -	1	-
1	503627807	CYLINDER COVER ASSY *Std*	1	-
1	503627808	CYLINDER COVER ASSY *Hd*	1	-
2	503987401	LABEL -	1	-
3	525887001	SCREW CITXPANMO -	3	-
4	503817701	FILTER COVER *Hd*	1	-
4	503628001	FILTER COVER *Std*	1	-
5	503740102	SNAP LOCKING -	2	-
6	537016501	SUPPORT -	1	-
7	537055903	SLEEVE -	3	-
1	503939372	CYLINDER ASSY *EPA*	1	-
1	503626473	CYLINDER ASSY -	1	-
2	503939271	PISTON ASSY *EPA*	1	-
2	503691271	PISTON ASSY -	1	-
3	503552201	PLUG -	1	-

Ref.	Article N.	Description	Qty	Kit
4	577572401	NEEDLE BEARING -	1	-
5	503715301	DECOMPRESSION VALVE -	1	-
6	525824903	SCREW ITXSCM -	4	-
7	503235111	SPARK PLUG *BPMR7A*	1	-
8	503961501	GASKET -	1	-
9	503289036	PISTON RING *EPA*	2	-
9	503289042	PISTON RING -	1	-
10	737431200	SNAP RING -	2	-
11	503775901	GASKET -	1	-
12	503775802	HEAT DEFLECTOR -	1	-
13	503647201	GASKET KIT *A = Set of gaskets*	1	-
1	544114013	FUEL TANK -	1	-
2	581756106	FUEL HOSE -	1	-
3	537099301	CONNECTION BEND *From serial number 20061200001 - 20184700378*	1	-
4	503600401	FILTER PLUG *Up to serial number - 20061199999*	1	-
4	537092201	TANK VENT ASSY *From serial number 20061200001 - 20184700378*	1	-
4	501873101	TANK VENT ASSY *Up to serial number - 20061199999*	1	-
4	501152901	TANK VENT ASSY *From serial number 20184700379 -*	1	-
5	503717601	THROTTLE CABLE ASSY -	1	-
6	720124020	PARALLEL PIN -	1	-
7	503556601	THROTTLE LOCKOUT -	1	-
8	503736401	SPRING	1	-

Ref.	Article N.	Description	Qty	Kit
		-		
9	503829801	TRIGGER -	1	-
10	720127220	PARALLEL PIN -	1	-
11	503895601	ANTIVIBRATION ELEMENT *Std*	1	-
11	503895602	ANTIVIBRATION ELEMENT *Hard*	1	-
12	537215207	TANK CAP ASSY -	1	-
13	503578901	HOLDER -	1	-
14	589241101	GASKET -	1	-
15	581756202	FUEL HOSE -	1	-
16	503443201	FUEL FILTER -	1	-
17	503637603	ANTIVIBRATION ELEMENT *Std*	1	-
17	503637604	ANTIVIBRATION ELEMENT *Hard*	1	-
1	503628602	HANDLE *WRAP G No screws or antivibration element included.*	1	-
1	503628671	HANDLE *WRAP*	1	-
2	586443001	SCREW ITXSCFT -	5	-
3	586440001	SCREW ITXSCFT -	1	-
4	503684504	ANTIVIBRATION ELEMENT *WRAP G*	1	-
4	503637504	ANTIVIBRATION ELEMENT *Wrap*	1	-
5	537017201	SPIKE -	1	-
1	503626771	FRONT HANDLE ASSY -	1	-
2	586443001	SCREW ITXSCFT -	4	-
3	586440001	SCREW ITXSCFT -	1	-

Ref.	Article N.	Description	Qty	Kit
4	503637505	ANTIVIBRATION ELEMENT *Hard*	1	-
4	503637504	ANTIVIBRATION ELEMENT *Std*	1	-
1	503640201	SWITCH -	1	-
3	501430001	CABLE GROMMET -	1	-
4	501802403	STATOR ASSY -	1	-
5	586438502	SCREW ITXSCM -	3	-
6	503220401	NUT -	1	-
7	537051604	FLYWHEEL ASSY -	1	-
8	501673501	SPRING -	2	-
9	503230042	WASHER -	2	-
10	537015501	STARTER PAWL -	2	-
11	506006901	SCREW -	2	-
12	586505401	SCREW ITXCSRT -	2	-
13	503705901	HEATING PLATE -	1	-
14	503626772	FRONT HANDLE ASSY *G*	1	-
15	586443001	SCREW ITXSCFT -	4	-
16	586440001	SCREW ITXSCFT -	1	-
17	503684504	ANTIVIBRATION ELEMENT *G*	1	-
1	501485402	SPARK PLUG CAP -	1	-
2	586880304	IGNITION MODULE -	1	-
3	582029701	SCREW ITXSCM -	2	-
4	503718201	SWITCH	1	-

Ref.	Article N.	Description	Qty	Kit
		-		
5	503626101	CABLE -	1	-
6	503897601	CABLE -	1	-
7	525887402	SCREW CITXPANT -	1	-
8	503221011	HEXAGON NUT -	1	-
9	537051605	FLYWHEEL ASSY -	1	-
10	501673501	SPRING -	2	-
11	503230042	WASHER -	2	-
12	537015501	STARTER PAWL -	2	-
13	506006901	SCREW -	2	-
14	503230101	WASHER -	1	-
1	544029702	MUFFLER ASSY *DF*	1	-
2	724128759	SCREW CRPANM -	1	-
3	503766402	SPARK ARRESTER SCREEN -	1	-
4	525825101	SCREW ITXSCM -	2	-
5	579025901	SUPPORT -	1	-
6	503200774	SCREW IHSCFM -	2	-
7	503200702	SCREW IHSCFM -	2	-
8	544029501	MUFFLER ASSY *Tube*	1	-
8	544029502	MUFFLER ASSY *Jungle*	1	-
1	503628171	STARTER ASSY	1	-
2	586443101	SCREW ITXSCFT	1	-
3	503859601	STARTER PULLEY	1	-

Ref.	Article N.	Description	Qty	Kit
4	522037301	STARTER HANDLE	1	-
5	503432902	STARTER ROPE	1	-
6	537283602	RECOIL SPRING	1	-
7	503628202	STARTER HOUSING	1	-
8	537086701	BUSHING	1	-
9	501630601	SLEEVE	1	-
10	525824501	SCREW CITXPANMO	4	-
11	537230201	LABEL *XP*	1	-
11	537230206	LABEL *XPG*	1	-
12	503628301	AIR CONDUCTOR	1	-
2	537060401	RETAINER -	1	-
3	537189801	THERMOSTAT ASSY -	1	-
4	503554901	SWITCH -	1	-
5	537071402	FOIL ELEMENT -	1	-
7	537071802	STATOR ASSY -	1	-
8	586438502	SCREW ITXSCM -	3	-
9	503220401	NUT -	1	-
10	537051606	FLYWHEEL ASSY -	1	-
11	501673501	SPRING -	2	-
12	503230042	WASHER -	2	-
13	537015501	STARTER PAWL -	2	-
14	506006901	SCREW -	2	-
15	501430001	CABLE GROMMET -	1	-
16	503213801	SCREW CRCSRT -	2	-
17	503705901	HEATING PLATE -	1	-

Ref.	Article N.	Description	Qty	Kit
18	503626772	FRONT HANDLE ASSY *G*	1	-
19	503214972	SCREW IHSCFT -	4	-
20	586440001	SCREW ITXSCFT -	1	-
21	503684504	ANTIVIBRATION ELEMENT *G*	1	-

IGNITION SYSTEM

M 372XP
IGNITION SYSTEM

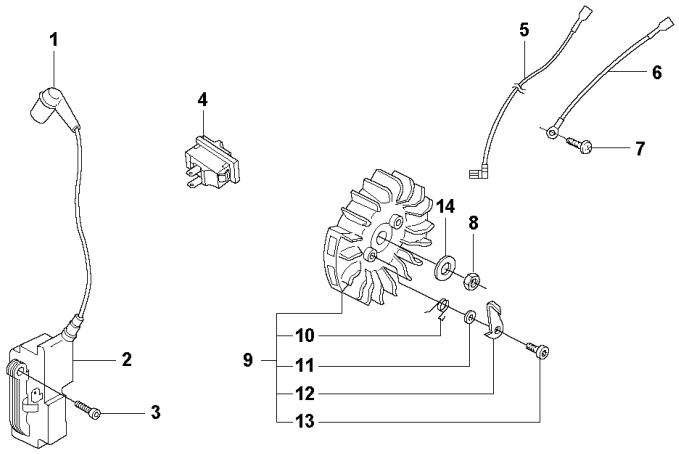

Ref.	Article N.	Description	Qty	Kit
1	588797401	TOOL -	1	-
2	501691701	COMBINATION WRENCH -	1	-
3	503558602	SPANNER *NV5*	1	-

Ref.	Article N.	Description	Qty	Kit
4	503558601	SPANNER *NV4*	1	-
5	503621201	GREASE -	1	-
6	501911401	GREASE GUN -	1	-
7	503969011	WINTER KIT *WINTER*	1	-
8	586505201	SCREW CITXPANT -	1	-
9	575880701	WRENCH *TORX T27/T20*	1	-
1	575269101	AIR FILTER ASSY *80µ*	1	-
1	575269103	AIR FILTER ASSY *Felt*	1	-
1	575269102	AIR FILTER ASSY *44µ*	1	-
2	503735401	CLAMP	1	-
3	537213204	KNOB	1	-
4	503818004	AIR FILTER *Felt*	1	-
4	503818005	AIR FILTER *80µ*	1	-
4	503818006	AIR FILTER *44µ*	1	-
5	503817801	FILTER HOLDER	1	-
6	731231401	HEXAGON NUT	1	-
7	581143001	SCREW ITXSCM	2	-
8	503701101	TUBE	2	-
9	503627502	FILTER HOLDER	1	-
10	503684101	LEVER	1	-
11	503667401	GUIDE BUSHING *Walbro HD-12B*	1	-
11	503665301	GUIDE BUSHING *Walbro HD-6B & HD-12C*	1	-
12	536033701	CARBURETTOR	1	-
13	503400606	IMPULSE HOSE	1	-
14	503431801	SUPPORT SLEEVE	1	-
15	503712701	FLANGE	1	-
16	503226503	SQUARE NUT	2	-

Ref.	Article N.	Description	Qty	Kit
17	503964501	INLET PIPE	1	-
17	503964502	INLET PIPE *For cold conditions*	1	-
18	505283309	HOSE CLAMP	1	-
1	536033701	CARBURETTOR	1	-
2	503647801	REPAIR KIT	1	-
3	501666101	SCREEN	1	-
4	503574201	PLUG	1	-
5	503563401	NEEDLE VALVE	1	-
6	501668301	LEVER	1	-
7	505520125	PIN	1	-
1	525755201	SCREW ITXSCFM -	4	-
2	503751103	HUB CAP -	1	-
3	525887402	SCREW CITXPANT -	1	-
4	501875303	KNEE JOINT -	1	-
5	586438501	SCREW ITXSCM -	1	-
6	503764903	HAND GUARD -	1	-
7	503436501	POSITION SPRING -	1	-
8	503838102	LOCK -	1	-
9	537008701	BRAKE LEVER -	1	-
10	503775201	BUSHING -	1	-
11	503709902	BRAKE SPRING -	1	-
12	503792702	SUPPORT -	1	-
13	503752202	BRAKE BAND ASSY -	1	-
14	537033501	CLUTCH COVER ASSY -	1	-
15	537033571	CLUTCH COVER ASSY -	1	-
16	537033803	LABEL	1	-

Ref.	Article N.	Description	Qty	Kit
		-		
17	503762902	CHIP GUARD -	1	-
18	503897001	SLEEVE -	1	-
19	525887402	SCREW CITXPANT -	1	-
20	525887402	SCREW CITXPANT -	2	-
21	537044102	CHAIN TENSIONER -	1	-
22	537016801	COVER -	1	-
23	503230066	WASHER -	1	-
24	537079502	WORM SCREW -	1	-
25	503998301	PAWL -	1	-
26	537017401	BEARING SLEEVE -	1	-
27	537079402	WORM WHEEL -	1	-
28	503230063	WASHER -	1	-
29	740480702	O-RING -	1	-
30	501517201	CHAIN GUIDE -	1	-
31	503220001	HEXAGON NUT -	2	-
31	503220010	NUT *30 pcs, plastic bag of 503220001*	1	-
32	525887402	SCREW CITXPANT -	1	-
33	503922701	SPIKE *372 WRAP*	1	-
34	503719701	SPIKE -	1	-
1	503521303	OIL PUMP ASSY -	1	-
2	503624901	SEALING PLUG -	1	-

Ref.	Article N.	Description	Qty	Kit
3	503521501	PUMP PISTON -	1	-
4	503230004	WASHER -	2	-
5	501615801	SPRING -	1	-
6	503813001	SPRING -	1	-
7	503811301	SCREW -	1	-
8	525824912	SCREW ITXSCM -	2	-
9	537207807	PUMP PINION -	1	-
10	503774301	OIL PIPE -	1	-
11	503644701	BUSHING *Up to serial number 20182009999*	1	-
11	587291801	OIL PRESSURE HOSE *From serial number 20182100001*	1	-
12	504300026	SEALING -	1	-
13	503426701	OIL HOSE -	1	-
14	501544102	OIL SCREEN -	1	-
15	503272101	E-CLIP -	1	-
16	503752401	WASHER -	1	-
17	586980602	CLUTCH DRUM ASSY *3/8x8T*	1	-
17	586980601	CLUTCH DRUM ASSY *3/8x7T*	1	-
18	501598002	RIM SPROCKET *3/8x7T*	1	-
18	505303661	RIM SPROCKET *3/8x8T*	1	-
19	503432001	NEEDLE HOLDER *3/8*	1	-
20	586798401	CLUTCH ASSY -	1	-
21	537360601	CLUTCH SPRING	3	-

Ref.	Article N.	Description	Qty	Kit
		-		
22	503230059	WASHER -	1	-
1	503626819	CRANKCASE ASSY -	1	-
2	503967001	BUSHING -	1	-
3	503260301	SEALING RING -	1	-
4	503751801	PIN -	1	-
5	501270801	GUIDE BUSHING -	1	-
6	501270801	GUIDE BUSHING -	1	-
7	537051301	BAR BOLT -	2	-
8	525887402	SCREW CITXPANT -	1	-
9	537013702	CHAIN GUIDE PLATE *From serial number 20182100001*	1	-
9	537046601	KIT *Up to serial number 20182009999*	1	-
10	586445401	SCREW ITXSCM -	1	-
11	525755201	SCREW ITXSCFM -	4	-
12	588093701	CARBURETTOR AREA BASE -	1	-
13	503734401	GROMMET -	1	-
14	503627701	CHOKE CONTROL -	1	-
15	579468901	SUPPORT -	1	-
16	537095401	GROMMET -	1	-
17	525824913	SCREW ITXSCM -	2	-
18	501686801	CHAIN CATCHER -	1	-
19	503627201	GASKET -	1	-

Ref.	Article N.	Description	Qty	Kit
20	503857301	COVER -	1	-
21	505275719	SEALING RING -	1	-
22	503628401	AIR NOZZLE -	1	-
23	525755201	SCREW ITXSCFM -	1	-
24	503846101	BUFFER -	1	-
25	537215207	TANK CAP ASSY -	1	-
26	503578901	HOLDER -	1	-
27	589241101	GASKET -	1	-
28	575791202	SCREW ITXSCM -	6	-
29	537403501	FILTER -	1	-
30	530026119	CHECK VALVE -	1	-
31	537042901	BUMPER -	1	-
32	525755103	SCREW ITXSCFM -	1	-
33	537024401	WEAR PROTECTION -	1	-
34	537089201	CHAIN CATCHER -	1	-
35	575793501	SCREW ITXPANM -	2	-
36	537017101	SPIKE -	1	-
37	503222401	LOCK NUT -	1	-
38	503647902	SPIKE -	1	-
39	503647201	GASKET KIT *A = Set of gaskets*	1	-
1	503748705	CRANKSHAFT ASSY -	1	-
2	586798401	CLUTCH ASSY	1	-

Ref.	Article N.	Description	Qty	Kit
		-		
3	503779101	SLEEVE -	1	-
4	503263019	O-RING -	1	-
5	585975001	BALL BEARING -	2	-
6	577572401	NEEDLE BEARING -	1	-
1	503627807	CYLINDER COVER ASSY *Std*	1	-
1	503627808	CYLINDER COVER ASSY *Hd*	1	-
2	503987401	LABEL -	1	-
3	525887001	SCREW CITXPANMO -	3	-
4	503817701	FILTER COVER *Hd*	1	-
4	503628001	FILTER COVER *Std*	1	-
5	503740102	SNAP LOCKING -	2	-
6	537016501	SUPPORT -	1	-
7	537055903	SLEEVE -	3	-
1	503939372	CYLINDER ASSY *EPA*	1	-
1	503626473	CYLINDER ASSY -	1	-
2	503939271	PISTON ASSY *EPA*	1	-
2	503691271	PISTON ASSY -	1	-
3	503552201	PLUG -	1	-
4	577572401	NEEDLE BEARING -	1	-
5	503715301	DECOMPRESSION VALVE -	1	-
6	525824903	SCREW ITXSCM -	4	-

Ref.	Article N.	Description	Qty	Kit
7	503235111	SPARK PLUG *BPMR7A*	1	-
8	503961501	GASKET -	1	-
9	503289036	PISTON RING *EPA*	2	-
9	503289042	PISTON RING -	1	-
10	737431200	SNAP RING -	2	-
11	503775901	GASKET -	1	-
12	503775802	HEAT DEFLECTOR -	1	-
13	503647201	GASKET KIT *A = Set of gaskets*	1	-
1	544114013	FUEL TANK -	1	-
2	581756106	FUEL HOSE -	1	-
3	537099301	CONNECTION BEND *From serial number 20061200001 - 20184700378*	1	-
4	503600401	FILTER PLUG *Up to serial number - 20061199999*	1	-
4	537092201	TANK VENT ASSY *From serial number 20061200001 - 20184700378*	1	-
4	501873101	TANK VENT ASSY *Up to serial number - 20061199999*	1	-
4	501152901	TANK VENT ASSY *From serial number 20184700379 -*	1	-
5	503717601	THROTTLE CABLE ASSY -	1	-
6	720124020	PARALLEL PIN -	1	-
7	503556601	THROTTLE LOCKOUT -	1	-
8	503736401	SPRING -	1	-
9	503829801	TRIGGER -	1	-
10	720127220	PARALLEL PIN -	1	-
11	503895601	ANTIVIBRATION ELEMENT	1	-

Ref.	Article N.	Description	Qty	Kit
		Std		
11	503895602	ANTIVIBRATION ELEMENT *Hard*	1	-
12	537215207	TANK CAP ASSY -	1	-
13	503578901	HOLDER -	1	-
14	589241101	GASKET -	1	-
15	581756202	FUEL HOSE -	1	-
16	503443201	FUEL FILTER -	1	-
17	503637603	ANTIVIBRATION ELEMENT *Std*	1	-
17	503637604	ANTIVIBRATION ELEMENT *Hard*	1	-
1	503628602	HANDLE *WRAP G No screws or antivibration element included.*	1	-
1	503628671	HANDLE *WRAP*	1	-
2	586443001	SCREW ITXSCFT -	5	-
3	586440001	SCREW ITXSCFT -	1	-
4	503684504	ANTIVIBRATION ELEMENT *WRAP G*	1	-
4	503637504	ANTIVIBRATION ELEMENT *Wrap*	1	-
5	537017201	SPIKE -	1	-
1	503626771	FRONT HANDLE ASSY -	1	-
2	586443001	SCREW ITXSCFT -	4	-
3	586440001	SCREW ITXSCFT -	1	-
4	503637505	ANTIVIBRATION ELEMENT *Hard*	1	-
4	503637504	ANTIVIBRATION ELEMENT *Std*	1	-
1	503640201	SWITCH -	1	-

Ref.	Article N.	Description	Qty	Kit
3	501430001	CABLE GROMMET -	1	-
4	501802403	STATOR ASSY -	1	-
5	586438502	SCREW ITXSCM -	3	-
6	503220401	NUT -	1	-
7	537051604	FLYWHEEL ASSY -	1	-
8	501673501	SPRING -	2	-
9	503230042	WASHER -	2	-
10	537015501	STARTER PAWL -	2	-
11	506006901	SCREW -	2	-
12	586505401	SCREW ITXCSRT -	2	-
13	503705901	HEATING PLATE -	1	-
14	503626772	FRONT HANDLE ASSY *G*	1	-
15	586443001	SCREW ITXSCFT -	4	-
16	586440001	SCREW ITXSCFT -	1	-
17	503684504	ANTIVIBRATION ELEMENT *G*	1	-
1	501485402	SPARK PLUG CAP -	1	-
2	586880304	IGNITION MODULE -	1	-
3	582029701	SCREW ITXSCM -	2	-
4	503718201	SWITCH -	1	-
5	503626101	CABLE -	1	-
6	503897601	CABLE -	1	-
7	525887402	SCREW CITXPANT	1	-

Ref.	Article N.	Description	Qty	Kit
		-		
8	503221011	HEXAGON NUT -	1	-
9	537051605	FLYWHEEL ASSY -	1	-
10	501673501	SPRING -	2	-
11	503230042	WASHER -	2	-
12	537015501	STARTER PAWL -	2	-
13	506006901	SCREW -	2	-
14	503230101	WASHER -	1	-
1	544029702	MUFFLER ASSY *DF*	1	-
2	724128759	SCREW CRPANM -	1	-
3	503766402	SPARK ARRESTER SCREEN -	1	-
4	525825101	SCREW ITXSCM -	2	-
5	579025901	SUPPORT -	1	-
6	503200774	SCREW IHSCFM -	2	-
7	503200702	SCREW IHSCFM -	2	-
8	544029501	MUFFLER ASSY *Tube*	1	-
8	544029502	MUFFLER ASSY *Jungle*	1	-
1	503628171	STARTER ASSY	1	-
2	586443101	SCREW ITXSCFT	1	-
3	503859601	STARTER PULLEY	1	-
4	522037301	STARTER HANDLE	1	-
5	503432902	STARTER ROPE	1	-
6	537283602	RECOIL SPRING	1	-
7	503628202	STARTER HOUSING	1	-
8	537086701	BUSHING	1	-
9	501630601	SLEEVE	1	-

Ref.	Article N.	Description	Qty	Kit
10	525824501	SCREW CITXPANMO	4	-
11	537230201	LABEL *XP*	1	-
11	537230206	LABEL *XPG*	1	-
12	503628301	AIR CONDUCTOR	1	-
2	537060401	RETAINER -	1	-
3	537189801	THERMOSTAT ASSY -	1	-
4	503554901	SWITCH -	1	-
5	537071402	FOIL ELEMENT -	1	-
7	537071802	STATOR ASSY -	1	-
8	586438502	SCREW ITXSCM -	3	-
9	503220401	NUT -	1	-
10	537051606	FLYWHEEL ASSY -	1	-
11	501673501	SPRING -	2	-
12	503230042	WASHER -	2	-
13	537015501	STARTER PAWL -	2	-
14	506006901	SCREW -	2	-
15	501430001	CABLE GROMMET -	1	-
16	503213801	SCREW CRCSRT -	2	-
17	503705901	HEATING PLATE -	1	-
18	503626772	FRONT HANDLE ASSY *G*	1	-
19	503214972	SCREW IHSCFT -	4	-
20	586440001	SCREW ITXSCFT -	1	-
21	503684504	ANTIVIBRATION ELEMENT	1	-

Ref.	Article N.	Description	Qty	Kit
		G		

MUFFLER

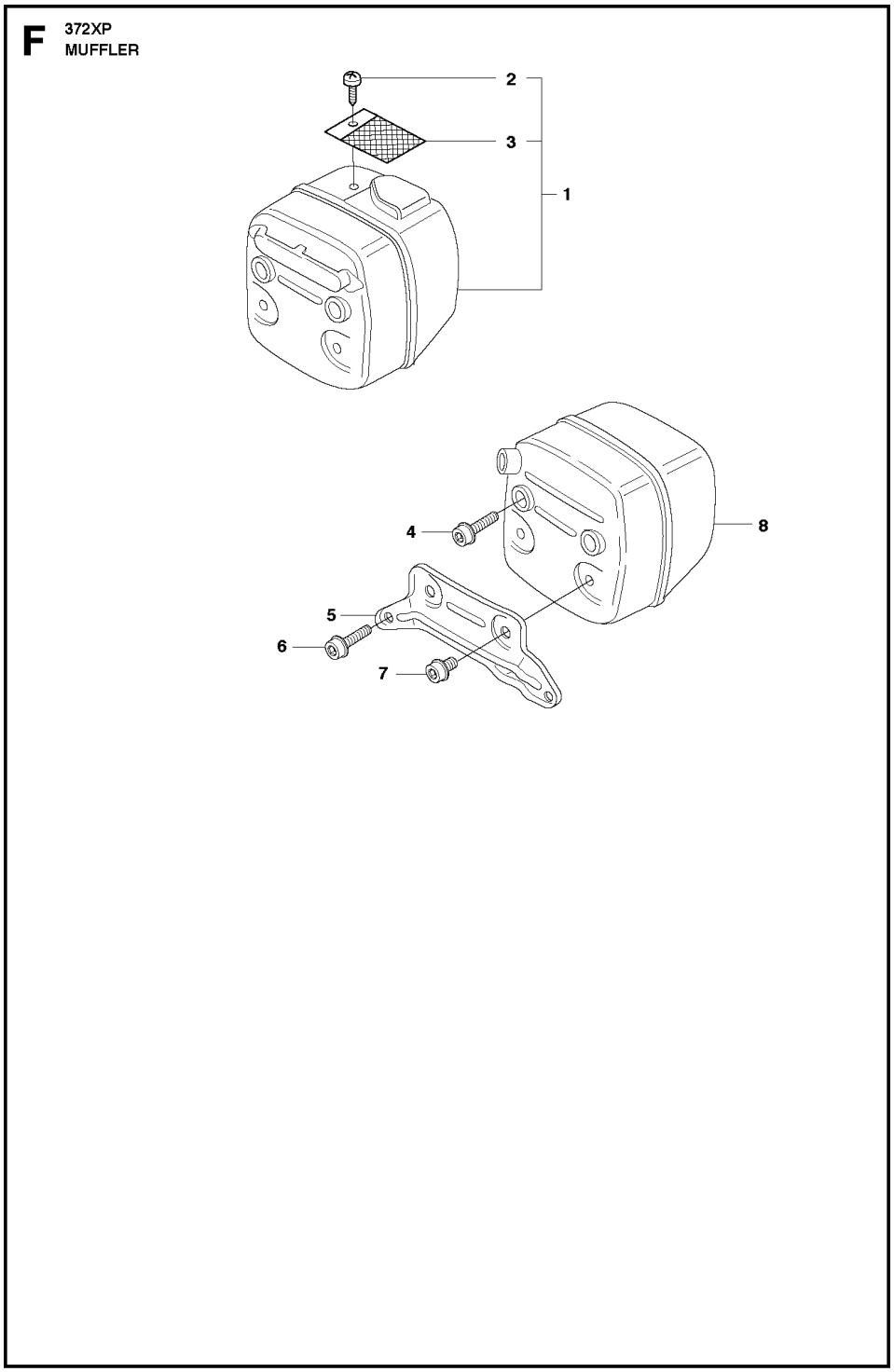

Ref.	Article N.	Description	Qty	Kit
1	588797401	TOOL -	1	-
2	501691701	COMBINATION WRENCH -	1	-
3	503558602	SPANNER *NV5*	1	-
4	503558601	SPANNER *NV4*	1	-
5	503621201	GREASE -	1	-
6	501911401	GREASE GUN -	1	-
7	503969011	WINTER KIT *WINTER*	1	-
8	586505201	SCREW CITXPANT -	1	-
9	575880701	WRENCH *TORX T27/T20*	1	-
1	575269101	AIR FILTER ASSY *80µ*	1	-
1	575269103	AIR FILTER ASSY *Felt*	1	-
1	575269102	AIR FILTER ASSY *44µ*	1	-
2	503735401	CLAMP	1	-
3	537213204	KNOB	1	-
4	503818004	AIR FILTER *Felt*	1	-
4	503818005	AIR FILTER *80µ*	1	-
4	503818006	AIR FILTER *44µ*	1	-
5	503817801	FILTER HOLDER	1	-
6	731231401	HEXAGON NUT	1	-
7	581143001	SCREW ITXSCM	2	-
8	503701101	TUBE	2	-
9	503627502	FILTER HOLDER	1	-
10	503684101	LEVER	1	-
11	503667401	GUIDE BUSHING *Walbro HD-12B*	1	-
11	503665301	GUIDE BUSHING *Walbro HD-6B & HD-12C*	1	-

Ref.	Article N.	Description	Qty	Kit
12	536033701	CARBURETTOR	1	-
13	503400606	IMPULSE HOSE	1	-
14	503431801	SUPPORT SLEEVE	1	-
15	503712701	FLANGE	1	-
16	503226503	SQUARE NUT	2	-
17	503964501	INLET PIPE	1	-
17	503964502	INLET PIPE *For cold conditions*	1	-
18	505283309	HOSE CLAMP	1	-
1	536033701	CARBURETTOR	1	-
2	503647801	REPAIR KIT	1	-
3	501666101	SCREEN	1	-
4	503574201	PLUG	1	-
5	503563401	NEEDLE VALVE	1	-
6	501668301	LEVER	1	-
7	505520125	PIN	1	-
1	525755201	SCREW ITXSCFM -	4	-
2	503751103	HUB CAP -	1	-
3	525887402	SCREW CITXPANT -	1	-
4	501875303	KNEE JOINT -	1	-
5	586438501	SCREW ITXSCM -	1	-
6	503764903	HAND GUARD -	1	-
7	503436501	POSITION SPRING -	1	-
8	503838102	LOCK -	1	-
9	537008701	BRAKE LEVER -	1	-
10	503775201	BUSHING -	1	-
11	503709902	BRAKE SPRING -	1	-
12	503792702	SUPPORT -	1	-
13	503752202	BRAKE BAND ASSY	1	-

Ref.	Article N.	Description	Qty	Kit
		-		
14	537033501	CLUTCH COVER ASSY -	1	-
15	537033571	CLUTCH COVER ASSY -	1	-
16	537033803	LABEL -	1	-
17	503762902	CHIP GUARD -	1	-
18	503897001	SLEEVE -	1	-
19	525887402	SCREW CITXPANT -	1	-
20	525887402	SCREW CITXPANT -	2	-
21	537044102	CHAIN TENSIONER -	1	-
22	537016801	COVER -	1	-
23	503230066	WASHER -	1	-
24	537079502	WORM SCREW -	1	-
25	503998301	PAWL -	1	-
26	537017401	BEARING SLEEVE -	1	-
27	537079402	WORM WHEEL -	1	-
28	503230063	WASHER -	1	-
29	740480702	O-RING -	1	-
30	501517201	CHAIN GUIDE -	1	-
31	503220001	HEXAGON NUT -	2	-
31	503220010	NUT *30 pcs, plastic bag of 503220001*	1	-
32	525887402	SCREW CITXPANT -	1	-
33	503922701	SPIKE *372 WRAP*	1	-

Ref.	Article N.	Description	Qty	Kit
34	503719701	SPIKE -	1	-
1	503521303	OIL PUMP ASSY -	1	-
2	503624901	SEALING PLUG -	1	-
3	503521501	PUMP PISTON -	1	-
4	503230004	WASHER -	2	-
5	501615801	SPRING -	1	-
6	503813001	SPRING -	1	-
7	503811301	SCREW -	1	-
8	525824912	SCREW ITXSCM -	2	-
9	537207807	PUMP PINION -	1	-
10	503774301	OIL PIPE -	1	-
11	503644701	BUSHING *Up to serial number 20182009999*	1	-
11	587291801	OIL PRESSURE HOSE *From serial number 20182100001*	1	-
12	504300026	SEALING -	1	-
13	503426701	OIL HOSE -	1	-
14	501544102	OIL SCREEN -	1	-
15	503272101	E-CLIP -	1	-
16	503752401	WASHER -	1	-
17	586980602	CLUTCH DRUM ASSY *3/8x8T*	1	-
17	586980601	CLUTCH DRUM ASSY *3/8x7T*	1	-
18	501598002	RIM SPROCKET *3/8x7T*	1	-
18	505303661	RIM SPROCKET	1	-

Ref.	Article N.	Description	Qty	Kit
		3/8x8T		
19	503432001	NEEDLE HOLDER *3/8*	1	-
20	586798401	CLUTCH ASSY -	1	-
21	537360601	CLUTCH SPRING -	3	-
22	503230059	WASHER -	1	-
1	503626819	CRANKCASE ASSY -	1	-
2	503967001	BUSHING -	1	-
3	503260301	SEALING RING -	1	-
4	503751801	PIN -	1	-
5	501270801	GUIDE BUSHING -	1	-
6	501270801	GUIDE BUSHING -	1	-
7	537051301	BAR BOLT -	2	-
8	525887402	SCREW CITXPANT -	1	-
9	537013702	CHAIN GUIDE PLATE *From serial number 20182100001*	1	-
9	537046601	KIT *Up to serial number 20182009999*	1	-
10	586445401	SCREW ITXSCM -	1	-
11	525755201	SCREW ITXSCFM -	4	-
12	588093701	CARBURETTOR AREA BASE -	1	-
13	503734401	GROMMET -	1	-
14	503627701	CHOKE CONTROL -	1	-
15	579468901	SUPPORT -	1	-
16	537095401	GROMMET -	1	-

Ref.	Article N.	Description	Qty	Kit
17	525824913	SCREW ITXSCM -	2	-
18	501686801	CHAIN CATCHER -	1	-
19	503627201	GASKET -	1	-
20	503857301	COVER -	1	-
21	505275719	SEALING RING -	1	-
22	503628401	AIR NOZZLE -	1	-
23	525755201	SCREW ITXSCFM -	1	-
24	503846101	BUFFER -	1	-
25	537215207	TANK CAP ASSY -	1	-
26	503578901	HOLDER -	1	-
27	589241101	GASKET -	1	-
28	575791202	SCREW ITXSCM -	6	-
29	537403501	FILTER -	1	-
30	530026119	CHECK VALVE -	1	-
31	537042901	BUMPER -	1	-
32	525755103	SCREW ITXSCFM -	1	-
33	537024401	WEAR PROTECTION -	1	-
34	537089201	CHAIN CATCHER -	1	-
35	575793501	SCREW ITXPANM -	2	-
36	537017101	SPIKE -	1	-
37	503222401	LOCK NUT -	1	-
38	503647902	SPIKE	1	-

Ref.	Article N.	Description	Qty	Kit
		-		
39	503647201	GASKET KIT *A = Set of gaskets*	1	-
1	503748705	CRANKSHAFT ASSY -	1	-
2	586798401	CLUTCH ASSY -	1	-
3	503779101	SLEEVE -	1	-
4	503263019	O-RING -	1	-
5	585975001	BALL BEARING -	2	-
6	577572401	NEEDLE BEARING -	1	-
1	503627807	CYLINDER COVER ASSY *Std*	1	-
1	503627808	CYLINDER COVER ASSY *Hd*	1	-
2	503987401	LABEL -	1	-
3	525887001	SCREW CITXPANMO -	3	-
4	503817701	FILTER COVER *Hd*	1	-
4	503628001	FILTER COVER *Std*	1	-
5	503740102	SNAP LOCKING -	2	-
6	537016501	SUPPORT -	1	-
7	537055903	SLEEVE -	3	-
1	503939372	CYLINDER ASSY *EPA*	1	-
1	503626473	CYLINDER ASSY -	1	-
2	503939271	PISTON ASSY *EPA*	1	-
2	503691271	PISTON ASSY -	1	-
3	503552201	PLUG -	1	-

Ref.	Article N.	Description	Qty	Kit
4	577572401	NEEDLE BEARING -	1	-
5	503715301	DECOMPRESSION VALVE -	1	-
6	525824903	SCREW ITXSCM -	4	-
7	503235111	SPARK PLUG *BPMR7A*	1	-
8	503961501	GASKET -	1	-
9	503289036	PISTON RING *EPA*	2	-
9	503289042	PISTON RING -	1	-
10	737431200	SNAP RING -	2	-
11	503775901	GASKET -	1	-
12	503775802	HEAT DEFLECTOR -	1	-
13	503647201	GASKET KIT *A = Set of gaskets*	1	-
1	544114013	FUEL TANK -	1	-
2	581756106	FUEL HOSE -	1	-
3	537099301	CONNECTION BEND *From serial number 20061200001 - 20184700378*	1	-
4	503600401	FILTER PLUG *Up to serial number - 20061199999*	1	-
4	537092201	TANK VENT ASSY *From serial number 20061200001 - 20184700378*	1	-
4	501873101	TANK VENT ASSY *Up to serial number - 20061199999*	1	-
4	501152901	TANK VENT ASSY *From serial number 20184700379 -*	1	-
5	503717601	THROTTLE CABLE ASSY -	1	-
6	720124020	PARALLEL PIN -	1	-
7	503556601	THROTTLE LOCKOUT -	1	-
8	503736401	SPRING	1	-

Ref.	Article N.	Description	Qty	Kit
		-		
9	503829801	TRIGGER -	1	-
10	720127220	PARALLEL PIN -	1	-
11	503895601	ANTIVIBRATION ELEMENT *Std*	1	-
11	503895602	ANTIVIBRATION ELEMENT *Hard*	1	-
12	537215207	TANK CAP ASSY -	1	-
13	503578901	HOLDER -	1	-
14	589241101	GASKET -	1	-
15	581756202	FUEL HOSE -	1	-
16	503443201	FUEL FILTER -	1	-
17	503637603	ANTIVIBRATION ELEMENT *Std*	1	-
17	503637604	ANTIVIBRATION ELEMENT *Hard*	1	-
1	503628602	HANDLE *WRAP G No screws or antivibration element included.*	1	-
1	503628671	HANDLE *WRAP*	1	-
2	586443001	SCREW ITXSCFT -	5	-
3	586440001	SCREW ITXSCFT -	1	-
4	503684504	ANTIVIBRATION ELEMENT *WRAP G*	1	-
4	503637504	ANTIVIBRATION ELEMENT *Wrap*	1	-
5	537017201	SPIKE -	1	-
1	503626771	FRONT HANDLE ASSY -	1	-
2	586443001	SCREW ITXSCFT -	4	-
3	586440001	SCREW ITXSCFT -	1	-

Ref.	Article N.	Description	Qty	Kit
4	503637505	ANTIVIBRATION ELEMENT *Hard*	1	-
4	503637504	ANTIVIBRATION ELEMENT *Std*	1	-
1	503640201	SWITCH -	1	-
3	501430001	CABLE GROMMET -	1	-
4	501802403	STATOR ASSY -	1	-
5	586438502	SCREW ITXSCM -	3	-
6	503220401	NUT -	1	-
7	537051604	FLYWHEEL ASSY -	1	-
8	501673501	SPRING -	2	-
9	503230042	WASHER -	2	-
10	537015501	STARTER PAWL -	2	-
11	506006901	SCREW -	2	-
12	586505401	SCREW ITXCSRT -	2	-
13	503705901	HEATING PLATE -	1	-
14	503626772	FRONT HANDLE ASSY *G*	1	-
15	586443001	SCREW ITXSCFT -	4	-
16	586440001	SCREW ITXSCFT -	1	-
17	503684504	ANTIVIBRATION ELEMENT *G*	1	-
1	501485402	SPARK PLUG CAP -	1	-
2	586880304	IGNITION MODULE -	1	-
3	582029701	SCREW ITXSCM -	2	-
4	503718201	SWITCH	1	-

Ref.	Article N.	Description	Qty	Kit
		-		
5	503626101	CABLE -	1	-
6	503897601	CABLE -	1	-
7	525887402	SCREW CITXPANT -	1	-
8	503221011	HEXAGON NUT -	1	-
9	537051605	FLYWHEEL ASSY -	1	-
10	501673501	SPRING -	2	-
11	503230042	WASHER -	2	-
12	537015501	STARTER PAWL -	2	-
13	506006901	SCREW -	2	-
14	503230101	WASHER -	1	-
1	544029702	MUFFLER ASSY *DF*	1	-
2	724128759	SCREW CRPANM -	1	-
3	503766402	SPARK ARRESTER SCREEN -	1	-
4	525825101	SCREW ITXSCM -	2	-
5	579025901	SUPPORT -	1	-
6	503200774	SCREW IHSCFM -	2	-
7	503200702	SCREW IHSCFM -	2	-
8	544029501	MUFFLER ASSY *Tube*	1	-
8	544029502	MUFFLER ASSY *Jungle*	1	-
1	503628171	STARTER ASSY	1	-
2	586443101	SCREW ITXSCFT	1	-
3	503859601	STARTER PULLEY	1	-

Ref.	Article N.	Description	Qty	Kit
4	522037301	STARTER HANDLE	1	-
5	503432902	STARTER ROPE	1	-
6	537283602	RECOIL SPRING	1	-
7	503628202	STARTER HOUSING	1	-
8	537086701	BUSHING	1	-
9	501630601	SLEEVE	1	-
10	525824501	SCREW CITXPANMO	4	-
11	537230201	LABEL *XP*	1	-
11	537230206	LABEL *XPG*	1	-
12	503628301	AIR CONDUCTOR	1	-
2	537060401	RETAINER -	1	-
3	537189801	THERMOSTAT ASSY -	1	-
4	503554901	SWITCH -	1	-
5	537071402	FOIL ELEMENT -	1	-
7	537071802	STATOR ASSY -	1	-
8	586438502	SCREW ITXSCM -	3	-
9	503220401	NUT -	1	-
10	537051606	FLYWHEEL ASSY -	1	-
11	501673501	SPRING -	2	-
12	503230042	WASHER -	2	-
13	537015501	STARTER PAWL -	2	-
14	506006901	SCREW -	2	-
15	501430001	CABLE GROMMET -	1	-
16	503213801	SCREW CRCSRT -	2	-
17	503705901	HEATING PLATE -	1	-

Ref.	Article N.	Description	Qty	Kit
18	503626772	FRONT HANDLE ASSY *G*	1	-
19	503214972	SCREW IHSCFT -	4	-
20	586440001	SCREW ITXSCFT -	1	-
21	503684504	ANTIVIBRATION ELEMENT *G*	1	-

STARTER

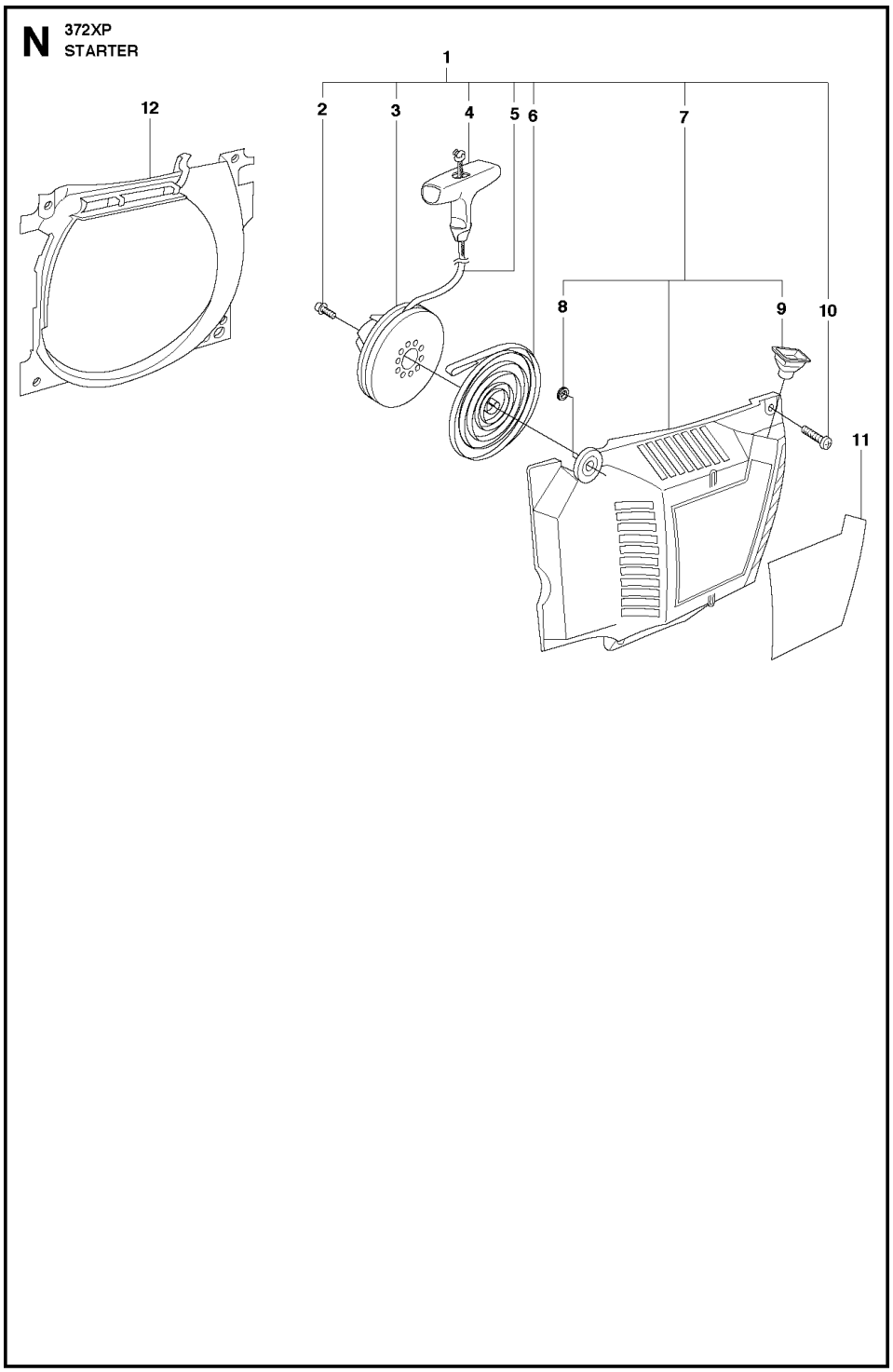

Ref.	Article N.	Description	Qty	Kit
1	588797401	TOOL -	1	-
2	501691701	COMBINATION WRENCH -	1	-
3	503558602	SPANNER *NV5*	1	-

Ref.	Article N.	Description	Qty	Kit
4	503558601	SPANNER *NV4*	1	-
5	503621201	GREASE -	1	-
6	501911401	GREASE GUN -	1	-
7	503969011	WINTER KIT *WINTER*	1	-
8	586505201	SCREW CITXPANT -	1	-
9	575880701	WRENCH *TORX T27/T20*	1	-
1	575269101	AIR FILTER ASSY *80µ*	1	-
1	575269103	AIR FILTER ASSY *Felt*	1	-
1	575269102	AIR FILTER ASSY *44µ*	1	-
2	503735401	CLAMP	1	-
3	537213204	KNOB	1	-
4	503818004	AIR FILTER *Felt*	1	-
4	503818005	AIR FILTER *80µ*	1	-
4	503818006	AIR FILTER *44µ*	1	-
5	503817801	FILTER HOLDER	1	-
6	731231401	HEXAGON NUT	1	-
7	581143001	SCREW ITXSCM	2	-
8	503701101	TUBE	2	-
9	503627502	FILTER HOLDER	1	-
10	503684101	LEVER	1	-
11	503667401	GUIDE BUSHING *Walbro HD-12B*	1	-
11	503665301	GUIDE BUSHING *Walbro HD-6B & HD-12C*	1	-
12	536033701	CARBURETTOR	1	-
13	503400606	IMPULSE HOSE	1	-
14	503431801	SUPPORT SLEEVE	1	-
15	503712701	FLANGE	1	-
16	503226503	SQUARE NUT	2	-

Ref.	Article N.	Description	Qty	Kit
17	503964501	INLET PIPE	1	-
17	503964502	INLET PIPE *For cold conditions*	1	-
18	505283309	HOSE CLAMP	1	-
1	536033701	CARBURETTOR	1	-
2	503647801	REPAIR KIT	1	-
3	501666101	SCREEN	1	-
4	503574201	PLUG	1	-
5	503563401	NEEDLE VALVE	1	-
6	501668301	LEVER	1	-
7	505520125	PIN	1	-
1	525755201	SCREW ITXSCFM -	4	-
2	503751103	HUB CAP -	1	-
3	525887402	SCREW CITXPANT -	1	-
4	501875303	KNEE JOINT -	1	-
5	586438501	SCREW ITXSCM -	1	-
6	503764903	HAND GUARD -	1	-
7	503436501	POSITION SPRING -	1	-
8	503838102	LOCK -	1	-
9	537008701	BRAKE LEVER -	1	-
10	503775201	BUSHING -	1	-
11	503709902	BRAKE SPRING -	1	-
12	503792702	SUPPORT -	1	-
13	503752202	BRAKE BAND ASSY -	1	-
14	537033501	CLUTCH COVER ASSY -	1	-
15	537033571	CLUTCH COVER ASSY -	1	-
16	537033803	LABEL	1	-

Ref.	Article N.	Description	Qty	Kit
		-		
17	503762902	CHIP GUARD -	1	-
18	503897001	SLEEVE -	1	-
19	525887402	SCREW CITXPANT -	1	-
20	525887402	SCREW CITXPANT -	2	-
21	537044102	CHAIN TENSIONER -	1	-
22	537016801	COVER -	1	-
23	503230066	WASHER -	1	-
24	537079502	WORM SCREW -	1	-
25	503998301	PAWL -	1	-
26	537017401	BEARING SLEEVE -	1	-
27	537079402	WORM WHEEL -	1	-
28	503230063	WASHER -	1	-
29	740480702	O-RING -	1	-
30	501517201	CHAIN GUIDE -	1	-
31	503220001	HEXAGON NUT -	2	-
31	503220010	NUT *30 pcs, plastic bag of 503220001*	1	-
32	525887402	SCREW CITXPANT -	1	-
33	503922701	SPIKE *372 WRAP*	1	-
34	503719701	SPIKE -	1	-
1	503521303	OIL PUMP ASSY -	1	-
2	503624901	SEALING PLUG -	1	-

Ref.	Article N.	Description	Qty	Kit
3	503521501	PUMP PISTON -	1	-
4	503230004	WASHER -	2	-
5	501615801	SPRING -	1	-
6	503813001	SPRING -	1	-
7	503811301	SCREW -	1	-
8	525824912	SCREW ITXSCM -	2	-
9	537207807	PUMP PINION -	1	-
10	503774301	OIL PIPE -	1	-
11	503644701	BUSHING *Up to serial number 20182009999*	1	-
11	587291801	OIL PRESSURE HOSE *From serial number 20182100001*	1	-
12	504300026	SEALING -	1	-
13	503426701	OIL HOSE -	1	-
14	501544102	OIL SCREEN -	1	-
15	503272101	E-CLIP -	1	-
16	503752401	WASHER -	1	-
17	586980602	CLUTCH DRUM ASSY *3/8x8T*	1	-
17	586980601	CLUTCH DRUM ASSY *3/8x7T*	1	-
18	501598002	RIM SPROCKET *3/8x7T*	1	-
18	505303661	RIM SPROCKET *3/8x8T*	1	-
19	503432001	NEEDLE HOLDER *3/8*	1	-
20	586798401	CLUTCH ASSY -	1	-
21	537360601	CLUTCH SPRING	3	-

Ref.	Article N.	Description	Qty	Kit
		-		
22	503230059	WASHER -	1	-
1	503626819	CRANKCASE ASSY -	1	-
2	503967001	BUSHING -	1	-
3	503260301	SEALING RING -	1	-
4	503751801	PIN -	1	-
5	501270801	GUIDE BUSHING -	1	-
6	501270801	GUIDE BUSHING -	1	-
7	537051301	BAR BOLT -	2	-
8	525887402	SCREW CITXPANT -	1	-
9	537013702	CHAIN GUIDE PLATE *From serial number 20182100001*	1	-
9	537046601	KIT *Up to serial number 20182009999*	1	-
10	586445401	SCREW ITXSCM -	1	-
11	525755201	SCREW ITXSCFM -	4	-
12	588093701	CARBURETTOR AREA BASE -	1	-
13	503734401	GROMMET -	1	-
14	503627701	CHOKE CONTROL -	1	-
15	579468901	SUPPORT -	1	-
16	537095401	GROMMET -	1	-
17	525824913	SCREW ITXSCM -	2	-
18	501686801	CHAIN CATCHER -	1	-
19	503627201	GASKET -	1	-

Ref.	Article N.	Description	Qty	Kit
20	503857301	COVER -	1	-
21	505275719	SEALING RING -	1	-
22	503628401	AIR NOZZLE -	1	-
23	525755201	SCREW ITXSCFM -	1	-
24	503846101	BUFFER -	1	-
25	537215207	TANK CAP ASSY -	1	-
26	503578901	HOLDER -	1	-
27	589241101	GASKET -	1	-
28	575791202	SCREW ITXSCM -	6	-
29	537403501	FILTER -	1	-
30	530026119	CHECK VALVE -	1	-
31	537042901	BUMPER -	1	-
32	525755103	SCREW ITXSCFM -	1	-
33	537024401	WEAR PROTECTION -	1	-
34	537089201	CHAIN CATCHER -	1	-
35	575793501	SCREW ITXPANM -	2	-
36	537017101	SPIKE -	1	-
37	503222401	LOCK NUT -	1	-
38	503647902	SPIKE -	1	-
39	503647201	GASKET KIT *A = Set of gaskets*	1	-
1	503748705	CRANKSHAFT ASSY -	1	-
2	586798401	CLUTCH ASSY	1	-

Ref.	Article N.	Description	Qty	Kit
		-		
3	503779101	SLEEVE -	1	-
4	503263019	O-RING -	1	-
5	585975001	BALL BEARING -	2	-
6	577572401	NEEDLE BEARING -	1	-
1	503627807	CYLINDER COVER ASSY *Std*	1	-
1	503627808	CYLINDER COVER ASSY *Hd*	1	-
2	503987401	LABEL -	1	-
3	525887001	SCREW CITXPANMO -	3	-
4	503817701	FILTER COVER *Hd*	1	-
4	503628001	FILTER COVER *Std*	1	-
5	503740102	SNAP LOCKING -	2	-
6	537016501	SUPPORT -	1	-
7	537055903	SLEEVE -	3	-
1	503939372	CYLINDER ASSY *EPA*	1	-
1	503626473	CYLINDER ASSY -	1	-
2	503939271	PISTON ASSY *EPA*	1	-
2	503691271	PISTON ASSY -	1	-
3	503552201	PLUG -	1	-
4	577572401	NEEDLE BEARING -	1	-
5	503715301	DECOMPRESSION VALVE -	1	-
6	525824903	SCREW ITXSCM -	4	-

Ref.	Article N.	Description	Qty	Kit
7	503235111	SPARK PLUG *BPMR7A*	1	-
8	503961501	GASKET -	1	-
9	503289036	PISTON RING *EPA*	2	-
9	503289042	PISTON RING -	1	-
10	737431200	SNAP RING -	2	-
11	503775901	GASKET -	1	-
12	503775802	HEAT DEFLECTOR -	1	-
13	503647201	GASKET KIT *A = Set of gaskets*	1	-
1	544114013	FUEL TANK -	1	-
2	581756106	FUEL HOSE -	1	-
3	537099301	CONNECTION BEND *From serial number 20061200001 - 20184700378*	1	-
4	503600401	FILTER PLUG *Up to serial number - 20061199999*	1	-
4	537092201	TANK VENT ASSY *From serial number 20061200001 - 20184700378*	1	-
4	501873101	TANK VENT ASSY *Up to serial number - 20061199999*	1	-
4	501152901	TANK VENT ASSY *From serial number 20184700379 -*	1	-
5	503717601	THROTTLE CABLE ASSY -	1	-
6	720124020	PARALLEL PIN -	1	-
7	503556601	THROTTLE LOCKOUT -	1	-
8	503736401	SPRING -	1	-
9	503829801	TRIGGER -	1	-
10	720127220	PARALLEL PIN -	1	-
11	503895601	ANTIVIBRATION ELEMENT	1	-

Ref.	Article N.	Description	Qty	Kit
		Std		
11	503895602	ANTIVIBRATION ELEMENT *Hard*	1	-
12	537215207	TANK CAP ASSY -	1	-
13	503578901	HOLDER -	1	-
14	589241101	GASKET -	1	-
15	581756202	FUEL HOSE -	1	-
16	503443201	FUEL FILTER -	1	-
17	503637603	ANTIVIBRATION ELEMENT *Std*	1	-
17	503637604	ANTIVIBRATION ELEMENT *Hard*	1	-
1	503628602	HANDLE *WRAP G No screws or antivibration element included.*	1	-
1	503628671	HANDLE *WRAP*	1	-
2	586443001	SCREW ITXSCFT -	5	-
3	586440001	SCREW ITXSCFT -	1	-
4	503684504	ANTIVIBRATION ELEMENT *WRAP G*	1	-
4	503637504	ANTIVIBRATION ELEMENT *Wrap*	1	-
5	537017201	SPIKE -	1	-
1	503626771	FRONT HANDLE ASSY -	1	-
2	586443001	SCREW ITXSCFT -	4	-
3	586440001	SCREW ITXSCFT -	1	-
4	503637505	ANTIVIBRATION ELEMENT *Hard*	1	-
4	503637504	ANTIVIBRATION ELEMENT *Std*	1	-
1	503640201	SWITCH -	1	-

Ref.	Article N.	Description	Qty	Kit
3	501430001	CABLE GROMMET -	1	-
4	501802403	STATOR ASSY -	1	-
5	586438502	SCREW ITXSCM -	3	-
6	503220401	NUT -	1	-
7	537051604	FLYWHEEL ASSY -	1	-
8	501673501	SPRING -	2	-
9	503230042	WASHER -	2	-
10	537015501	STARTER PAWL -	2	-
11	506006901	SCREW -	2	-
12	586505401	SCREW ITXCSRT -	2	-
13	503705901	HEATING PLATE -	1	-
14	503626772	FRONT HANDLE ASSY *G*	1	-
15	586443001	SCREW ITXSCFT -	4	-
16	586440001	SCREW ITXSCFT -	1	-
17	503684504	ANTIVIBRATION ELEMENT *G*	1	-
1	501485402	SPARK PLUG CAP -	1	-
2	586880304	IGNITION MODULE -	1	-
3	582029701	SCREW ITXSCM -	2	-
4	503718201	SWITCH -	1	-
5	503626101	CABLE -	1	-
6	503897601	CABLE -	1	-
7	525887402	SCREW CITXPANT	1	-

Ref.	Article N.	Description	Qty	Kit
		-		
8	503221011	HEXAGON NUT -	1	-
9	537051605	FLYWHEEL ASSY -	1	-
10	501673501	SPRING -	2	-
11	503230042	WASHER -	2	-
12	537015501	STARTER PAWL -	2	-
13	506006901	SCREW -	2	-
14	503230101	WASHER -	1	-
1	544029702	MUFFLER ASSY *DF*	1	-
2	724128759	SCREW CRPANM -	1	-
3	503766402	SPARK ARRESTER SCREEN -	1	-
4	525825101	SCREW ITXSCM -	2	-
5	579025901	SUPPORT -	1	-
6	503200774	SCREW IHSCFM -	2	-
7	503200702	SCREW IHSCFM -	2	-
8	544029501	MUFFLER ASSY *Tube*	1	-
8	544029502	MUFFLER ASSY *Jungle*	1	-
1	503628171	STARTER ASSY	1	-
2	586443101	SCREW ITXSCFT	1	-
3	503859601	STARTER PULLEY	1	-
4	522037301	STARTER HANDLE	1	-
5	503432902	STARTER ROPE	1	-
6	537283602	RECOIL SPRING	1	-
7	503628202	STARTER HOUSING	1	-
8	537086701	BUSHING	1	-
9	501630601	SLEEVE	1	-

Ref.	Article N.	Description	Qty	Kit
10	525824501	SCREW CITXPANMO	4	-
11	537230201	LABEL *XP*	1	-
11	537230206	LABEL *XPG*	1	-
12	503628301	AIR CONDUCTOR	1	-
2	537060401	RETAINER -	1	-
3	537189801	THERMOSTAT ASSY -	1	-
4	503554901	SWITCH -	1	-
5	537071402	FOIL ELEMENT -	1	-
7	537071802	STATOR ASSY -	1	-
8	586438502	SCREW ITXSCM -	3	-
9	503220401	NUT -	1	-
10	537051606	FLYWHEEL ASSY -	1	-
11	501673501	SPRING -	2	-
12	503230042	WASHER -	2	-
13	537015501	STARTER PAWL -	2	-
14	506006901	SCREW -	2	-
15	501430001	CABLE GROMMET -	1	-
16	503213801	SCREW CRCSRT -	2	-
17	503705901	HEATING PLATE -	1	-
18	503626772	FRONT HANDLE ASSY *G*	1	-
19	503214972	SCREW IHSCFT -	4	-
20	586440001	SCREW ITXSCFT -	1	-
21	503684504	ANTIVIBRATION ELEMENT	1	-

Ref.	Article N.	Description	Qty	Kit
		G		

HEATED HANDLES

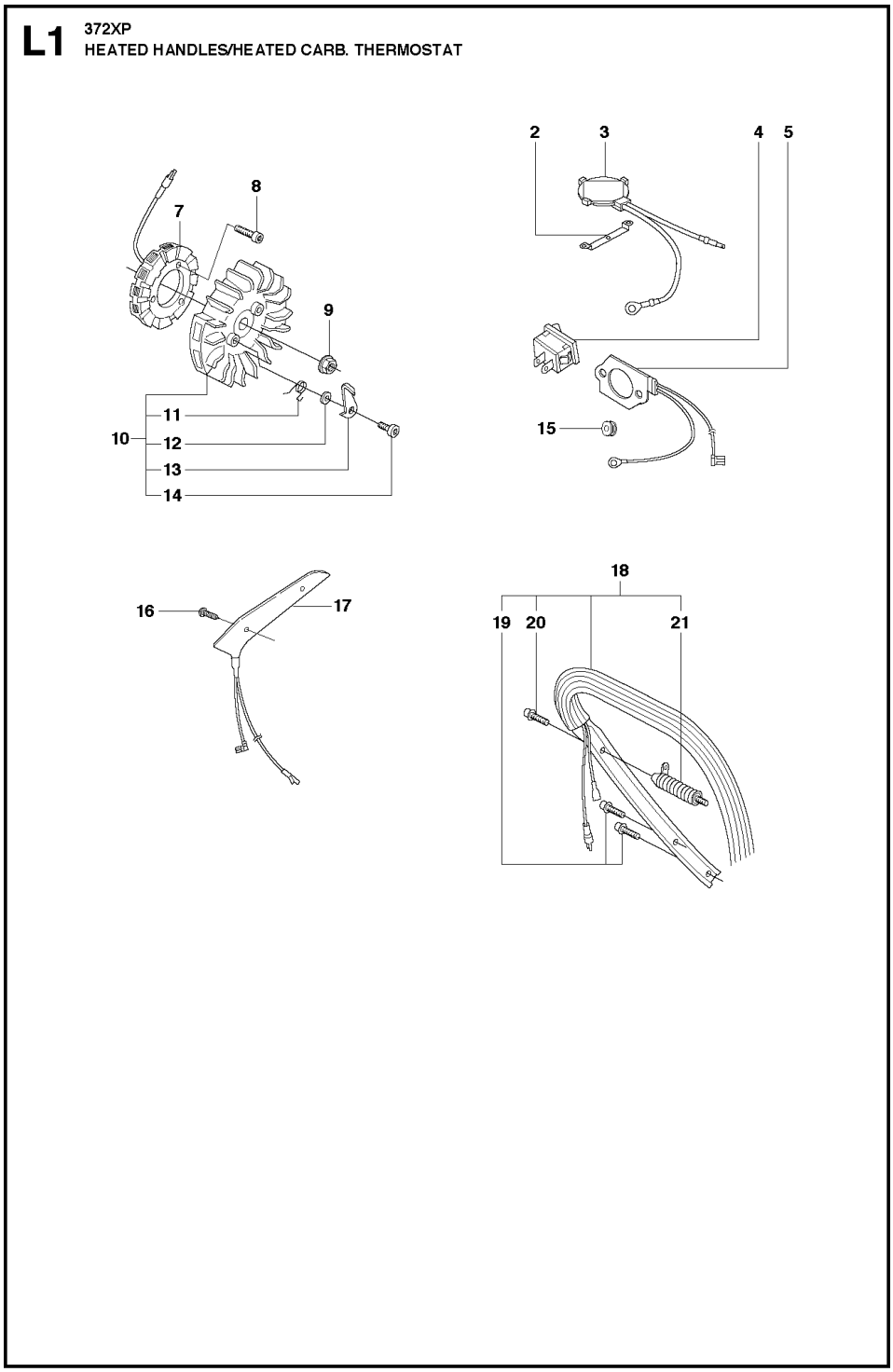

Ref.	Article N.	Description	Qty	Kit
1	588797401	TOOL -	1	-
2	501691701	COMBINATION WRENCH -	1	-
3	503558602	SPANNER *NV5*	1	-
4	503558601	SPANNER *NV4*	1	-
5	503621201	GREASE -	1	-
6	501911401	GREASE GUN -	1	-
7	503969011	WINTER KIT *WINTER*	1	-
8	586505201	SCREW CITXPANT -	1	-
9	575880701	WRENCH *TORX T27/T20*	1	-
1	575269101	AIR FILTER ASSY *80µ*	1	-
1	575269103	AIR FILTER ASSY *Felt*	1	-
1	575269102	AIR FILTER ASSY *44µ*	1	-
2	503735401	CLAMP	1	-
3	537213204	KNOB	1	-
4	503818004	AIR FILTER *Felt*	1	-
4	503818005	AIR FILTER *80µ*	1	-
4	503818006	AIR FILTER *44µ*	1	-
5	503817801	FILTER HOLDER	1	-
6	731231401	HEXAGON NUT	1	-
7	581143001	SCREW ITXSCM	2	-
8	503701101	TUBE	2	-
9	503627502	FILTER HOLDER	1	-
10	503684101	LEVER	1	-
11	503667401	GUIDE BUSHING *Walbro HD-12B*	1	-
11	503665301	GUIDE BUSHING *Walbro HD-6B & HD-12C*	1	-

Ref.	Article N.	Description	Qty	Kit
12	536033701	CARBURETTOR	1	-
13	503400606	IMPULSE HOSE	1	-
14	503431801	SUPPORT SLEEVE	1	-
15	503712701	FLANGE	1	-
16	503226503	SQUARE NUT	2	-
17	503964501	INLET PIPE	1	-
17	503964502	INLET PIPE *For cold conditions*	1	-
18	505283309	HOSE CLAMP	1	-
1	536033701	CARBURETTOR	1	-
2	503647801	REPAIR KIT	1	-
3	501666101	SCREEN	1	-
4	503574201	PLUG	1	-
5	503563401	NEEDLE VALVE	1	-
6	501668301	LEVER	1	-
7	505520125	PIN	1	-
1	525755201	SCREW ITXSCFM -	4	-
2	503751103	HUB CAP -	1	-
3	525887402	SCREW CITXPANT -	1	-
4	501875303	KNEE JOINT -	1	-
5	586438501	SCREW ITXSCM -	1	-
6	503764903	HAND GUARD -	1	-
7	503436501	POSITION SPRING -	1	-
8	503838102	LOCK -	1	-
9	537008701	BRAKE LEVER -	1	-
10	503775201	BUSHING -	1	-
11	503709902	BRAKE SPRING -	1	-
12	503792702	SUPPORT -	1	-
13	503752202	BRAKE BAND ASSY	1	-

Ref.	Article N.	Description	Qty	Kit
		-		
14	537033501	CLUTCH COVER ASSY -	1	-
15	537033571	CLUTCH COVER ASSY -	1	-
16	537033803	LABEL -	1	-
17	503762902	CHIP GUARD -	1	-
18	503897001	SLEEVE -	1	-
19	525887402	SCREW CITXPANT -	1	-
20	525887402	SCREW CITXPANT -	2	-
21	537044102	CHAIN TENSIONER -	1	-
22	537016801	COVER -	1	-
23	503230066	WASHER -	1	-
24	537079502	WORM SCREW -	1	-
25	503998301	PAWL -	1	-
26	537017401	BEARING SLEEVE -	1	-
27	537079402	WORM WHEEL -	1	-
28	503230063	WASHER -	1	-
29	740480702	O-RING -	1	-
30	501517201	CHAIN GUIDE -	1	-
31	503220001	HEXAGON NUT -	2	-
31	503220010	NUT *30 pcs, plastic bag of 503220001*	1	-
32	525887402	SCREW CITXPANT -	1	-
33	503922701	SPIKE *372 WRAP*	1	-

Ref.	Article N.	Description	Qty	Kit
34	503719701	SPIKE -	1	-
1	503521303	OIL PUMP ASSY -	1	-
2	503624901	SEALING PLUG -	1	-
3	503521501	PUMP PISTON -	1	-
4	503230004	WASHER -	2	-
5	501615801	SPRING -	1	-
6	503813001	SPRING -	1	-
7	503811301	SCREW -	1	-
8	525824912	SCREW ITXSCM -	2	-
9	537207807	PUMP PINION -	1	-
10	503774301	OIL PIPE -	1	-
11	503644701	BUSHING *Up to serial number 20182009999*	1	-
11	587291801	OIL PRESSURE HOSE *From serial number 20182100001*	1	-
12	504300026	SEALING -	1	-
13	503426701	OIL HOSE -	1	-
14	501544102	OIL SCREEN -	1	-
15	503272101	E-CLIP -	1	-
16	503752401	WASHER -	1	-
17	586980602	CLUTCH DRUM ASSY *3/8x8T*	1	-
17	586980601	CLUTCH DRUM ASSY *3/8x7T*	1	-
18	501598002	RIM SPROCKET *3/8x7T*	1	-
18	505303661	RIM SPROCKET	1	-

Ref.	Article N.	Description	Qty	Kit
		3/8x8T		
19	503432001	NEEDLE HOLDER *3/8*	1	-
20	586798401	CLUTCH ASSY -	1	-
21	537360601	CLUTCH SPRING -	3	-
22	503230059	WASHER -	1	-
1	503626819	CRANKCASE ASSY -	1	-
2	503967001	BUSHING -	1	-
3	503260301	SEALING RING -	1	-
4	503751801	PIN -	1	-
5	501270801	GUIDE BUSHING -	1	-
6	501270801	GUIDE BUSHING -	1	-
7	537051301	BAR BOLT -	2	-
8	525887402	SCREW CITXPANT -	1	-
9	537013702	CHAIN GUIDE PLATE *From serial number 20182100001*	1	-
9	537046601	KIT *Up to serial number 20182009999*	1	-
10	586445401	SCREW ITXSCM -	1	-
11	525755201	SCREW ITXSCFM -	4	-
12	588093701	CARBURETTOR AREA BASE -	1	-
13	503734401	GROMMET -	1	-
14	503627701	CHOKE CONTROL -	1	-
15	579468901	SUPPORT -	1	-
16	537095401	GROMMET -	1	-

Ref.	Article N.	Description	Qty	Kit
17	525824913	SCREW ITXSCM -	2	-
18	501686801	CHAIN CATCHER -	1	-
19	503627201	GASKET -	1	-
20	503857301	COVER -	1	-
21	505275719	SEALING RING -	1	-
22	503628401	AIR NOZZLE -	1	-
23	525755201	SCREW ITXSCFM -	1	-
24	503846101	BUFFER -	1	-
25	537215207	TANK CAP ASSY -	1	-
26	503578901	HOLDER -	1	-
27	589241101	GASKET -	1	-
28	575791202	SCREW ITXSCM -	6	-
29	537403501	FILTER -	1	-
30	530026119	CHECK VALVE -	1	-
31	537042901	BUMPER -	1	-
32	525755103	SCREW ITXSCFM -	1	-
33	537024401	WEAR PROTECTION -	1	-
34	537089201	CHAIN CATCHER -	1	-
35	575793501	SCREW ITXPANM -	2	-
36	537017101	SPIKE -	1	-
37	503222401	LOCK NUT -	1	-
38	503647902	SPIKE	1	-

Ref.	Article N.	Description	Qty	Kit
		-		
39	503647201	GASKET KIT *A = Set of gaskets*	1	-
1	503748705	CRANKSHAFT ASSY -	1	-
2	586798401	CLUTCH ASSY -	1	-
3	503779101	SLEEVE -	1	-
4	503263019	O-RING -	1	-
5	585975001	BALL BEARING -	2	-
6	577572401	NEEDLE BEARING -	1	-
1	503627807	CYLINDER COVER ASSY *Std*	1	-
1	503627808	CYLINDER COVER ASSY *Hd*	1	-
2	503987401	LABEL -	1	-
3	525887001	SCREW CITXPANMO -	3	-
4	503817701	FILTER COVER *Hd*	1	-
4	503628001	FILTER COVER *Std*	1	-
5	503740102	SNAP LOCKING -	2	-
6	537016501	SUPPORT -	1	-
7	537055903	SLEEVE -	3	-
1	503939372	CYLINDER ASSY *EPA*	1	-
1	503626473	CYLINDER ASSY -	1	-
2	503939271	PISTON ASSY *EPA*	1	-
2	503691271	PISTON ASSY -	1	-
3	503552201	PLUG -	1	-

Ref.	Article N.	Description	Qty	Kit
4	577572401	NEEDLE BEARING -	1	-
5	503715301	DECOMPRESSION VALVE -	1	-
6	525824903	SCREW ITXSCM -	4	-
7	503235111	SPARK PLUG *BPMR7A*	1	-
8	503961501	GASKET -	1	-
9	503289036	PISTON RING *EPA*	2	-
9	503289042	PISTON RING -	1	-
10	737431200	SNAP RING -	2	-
11	503775901	GASKET -	1	-
12	503775802	HEAT DEFLECTOR -	1	-
13	503647201	GASKET KIT *A = Set of gaskets*	1	-
1	544114013	FUEL TANK -	1	-
2	581756106	FUEL HOSE -	1	-
3	537099301	CONNECTION BEND *From serial number 20061200001 - 20184700378*	1	-
4	503600401	FILTER PLUG *Up to serial number - 20061199999*	1	-
4	537092201	TANK VENT ASSY *From serial number 20061200001 - 20184700378*	1	-
4	501873101	TANK VENT ASSY *Up to serial number - 20061199999*	1	-
4	501152901	TANK VENT ASSY *From serial number 20184700379 -*	1	-
5	503717601	THROTTLE CABLE ASSY -	1	-
6	720124020	PARALLEL PIN -	1	-
7	503556601	THROTTLE LOCKOUT -	1	-
8	503736401	SPRING	1	-

Ref.	Article N.	Description	Qty	Kit
		-		
9	503829801	TRIGGER -	1	-
10	720127220	PARALLEL PIN -	1	-
11	503895601	ANTIVIBRATION ELEMENT *Std*	1	-
11	503895602	ANTIVIBRATION ELEMENT *Hard*	1	-
12	537215207	TANK CAP ASSY -	1	-
13	503578901	HOLDER -	1	-
14	589241101	GASKET -	1	-
15	581756202	FUEL HOSE -	1	-
16	503443201	FUEL FILTER -	1	-
17	503637603	ANTIVIBRATION ELEMENT *Std*	1	-
17	503637604	ANTIVIBRATION ELEMENT *Hard*	1	-
1	503628602	HANDLE *WRAP G No screws or antivibration element included.*	1	-
1	503628671	HANDLE *WRAP*	1	-
2	586443001	SCREW ITXSCFT -	5	-
3	586440001	SCREW ITXSCFT -	1	-
4	503684504	ANTIVIBRATION ELEMENT *WRAP G*	1	-
4	503637504	ANTIVIBRATION ELEMENT *Wrap*	1	-
5	537017201	SPIKE -	1	-
1	503626771	FRONT HANDLE ASSY -	1	-
2	586443001	SCREW ITXSCFT -	4	-
3	586440001	SCREW ITXSCFT -	1	-

Ref.	Article N.	Description	Qty	Kit
4	503637505	ANTIVIBRATION ELEMENT *Hard*	1	-
4	503637504	ANTIVIBRATION ELEMENT *Std*	1	-
1	503640201	SWITCH -	1	-
3	501430001	CABLE GROMMET -	1	-
4	501802403	STATOR ASSY -	1	-
5	586438502	SCREW ITXSCM -	3	-
6	503220401	NUT -	1	-
7	537051604	FLYWHEEL ASSY -	1	-
8	501673501	SPRING -	2	-
9	503230042	WASHER -	2	-
10	537015501	STARTER PAWL -	2	-
11	506006901	SCREW -	2	-
12	586505401	SCREW ITXCSRT -	2	-
13	503705901	HEATING PLATE -	1	-
14	503626772	FRONT HANDLE ASSY *G*	1	-
15	586443001	SCREW ITXSCFT -	4	-
16	586440001	SCREW ITXSCFT -	1	-
17	503684504	ANTIVIBRATION ELEMENT *G*	1	-
1	501485402	SPARK PLUG CAP -	1	-
2	586880304	IGNITION MODULE -	1	-
3	582029701	SCREW ITXSCM -	2	-
4	503718201	SWITCH	1	-

Ref.	Article N.	Description	Qty	Kit
		-		
5	503626101	CABLE -	1	-
6	503897601	CABLE -	1	-
7	525887402	SCREW CITXPANT -	1	-
8	503221011	HEXAGON NUT -	1	-
9	537051605	FLYWHEEL ASSY -	1	-
10	501673501	SPRING -	2	-
11	503230042	WASHER -	2	-
12	537015501	STARTER PAWL -	2	-
13	506006901	SCREW -	2	-
14	503230101	WASHER -	1	-
1	544029702	MUFFLER ASSY *DF*	1	-
2	724128759	SCREW CRPANM -	1	-
3	503766402	SPARK ARRESTER SCREEN -	1	-
4	525825101	SCREW ITXSCM -	2	-
5	579025901	SUPPORT -	1	-
6	503200774	SCREW IHSCFM -	2	-
7	503200702	SCREW IHSCFM -	2	-
8	544029501	MUFFLER ASSY *Tube*	1	-
8	544029502	MUFFLER ASSY *Jungle*	1	-
1	503628171	STARTER ASSY	1	-
2	586443101	SCREW ITXSCFT	1	-
3	503859601	STARTER PULLEY	1	-

Ref.	Article N.	Description	Qty	Kit
4	522037301	STARTER HANDLE	1	-
5	503432902	STARTER ROPE	1	-
6	537283602	RECOIL SPRING	1	-
7	503628202	STARTER HOUSING	1	-
8	537086701	BUSHING	1	-
9	501630601	SLEEVE	1	-
10	525824501	SCREW CITXPANMO	4	-
11	537230201	LABEL *XP*	1	-
11	537230206	LABEL *XPG*	1	-
12	503628301	AIR CONDUCTOR	1	-
2	537060401	RETAINER -	1	-
3	537189801	THERMOSTAT ASSY -	1	-
4	503554901	SWITCH -	1	-
5	537071402	FOIL ELEMENT -	1	-
7	537071802	STATOR ASSY -	1	-
8	586438502	SCREW ITXSCM -	3	-
9	503220401	NUT -	1	-
10	537051606	FLYWHEEL ASSY -	1	-
11	501673501	SPRING -	2	-
12	503230042	WASHER -	2	-
13	537015501	STARTER PAWL -	2	-
14	506006901	SCREW -	2	-
15	501430001	CABLE GROMMET -	1	-
16	503213801	SCREW CRCSRT -	2	-
17	503705901	HEATING PLATE -	1	-

Ref.	Article N.	Description	Qty	Kit
18	503626772	FRONT HANDLE ASSY *G*	1	-
19	503214972	SCREW IHSCFT -	4	-
20	586440001	SCREW ITXSCFT -	1	-
21	503684504	ANTIVIBRATION ELEMENT *G*	1	-