ACCESSORIES

P 440 II, 440e II
ACCESSORIES

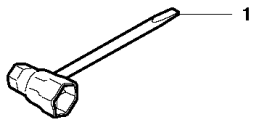

Ref.	Article N.	Description	Qty	Kit
1	501691701	COMBINATION WRENCH -	1	-
1	504724701	INSULATION WALL	1	-
2	504724501	INSULATION WALL	1	-
3	504724401	INSULATION WALL	1	-
4	504201202	INLET PIPE	1	-
5	503200216	SCREW IHSCFM	4	-
6	547727401	CARBURETTOR *Zama Z014-120-0601-F*	1	-
7	544284401	THROTTLE ROD ASSY	1	-
8	544976402	FILTER HOLDER	1	-
9	544392601	SHACKLE	1	-
10	504712501	GUIDE	1	-
11	544844306	CONTROL	1	-
12	544976601	SCREW	1	-
13	503200240	SCREW IHSCFM	3	-
14	544805403	AIR FILTER *Non-Woven - Clear*	1	-
14	599729401	AIR FILTER ASSY *Nylon Mesh - 44 Micron Rating - Black*	1	-
15	503936601	PURGE	1	-
16	544401901	HOSE	1	-
1	547727401	CARBURETTOR *Zama Z014-120-0601-F*	1	-
2	503481101	PIECE	1	-
3	504024001	NOZZLE ASSY	1	-
4	503535601	PLUG WELCH	1	-
5	503479701	VALVE	1	-
6	537020301	SPRING	1	-
7	503665901	LEVER	1	-
8	503480001	PIN RETAINING SCREW	1	-
9	504024101	SCREW	1	-
10	505535201	HUB CAP	1	-
11	504026101	SHAFT ASSY	1	-
12	505110701	COLLAR	1	-
13	504028501	SPRING	1	-
14	504027501	VALVE	1	-
15	503481801	SCREW	2	-
16	504026701	CIRCLIP	2	-

Ref.	Article N.	Description	Qty	Kit
17	504026201	SHAFT ASSY	1	-
18	540053701	LEVER	1	-
19	504028301	SPRING	1	-
20	504026301	LEVER	1	-
21	503479001	SCREW	2	-
22	504027401	VALVE	1	-
23	503481801	SCREW	2	-
24	504026001	SHAFT ASSY	1	-
25	504028401	SPRING	1	-
26	544983101	LEVER	1	-
27	503479001	SCREW	2	-
28	504027601	VALVE	1	-
29	503479201	SCREW	1	-
30	504027301	SCREW	1	-
31	504909201	SCREW	1	-
32	504028101	SCREW	1	-
33	504024301	GASKET	1	-
34	504024501	DIAPHRAGM	1	-
35	504024601	BODY	1	-
36	504028201	SCREW	1	-
37	504025001	STRAINER	1	-
38	504025601	DIAPHRAGM	1	-
39	504025701	GASKET	1	-
40	504025901	COVER	1	-
41	504027801	SCREW	4	-
42	504028601	GASKET KIT	1	-
1	544194905	CLUTCH COVER ASSY *Orange*	1	-
1	544194915	CLUTCH COVER ASSY *Grey*	1	-
2	504542801	COVER LID	1	-
3	544306001	BRAKE BAND ASSY	1	-
4	544253101	WEAR PROTECTION	1	-
5	503855201	GUIDE BUSHING	1	-
6	505892601	BRAKE SPRING	1	-
7	544248501	COVER LID	1	-
8	503890802	KNEE JOINT ASSY	1	-
9	503892901	PIN	1	-
10	735310820	E-CLIP	1	-

Ref.	Article N.	Description	Qty	Kit
11	537392901	SCREW	1	-
12	537347201	GEAR ASSY	1	-
13	537392601	HEAT PROTECTOR	1	-
14	544357501	LABEL	1	-
15	503217010	SCREW CCRPANT	10	-
16	525354301	BEARING SLEEVE	1	-
17	505321001	WEAR PLATE	1	-
18	537347801	KNOB	1	-
1	575568001	CLUTCH ASSY	1	-
2	574718801	CLUTCH SPRING	2	-
3	505441501	CLUTCH DRUM ASSY	1	-
4	503539201	NEEDLE BEARING	1	-
5	536860001	WORM GEAR	1	-
6	540057901	PUMP PISTON	1	-
7	537154801	PUMP CYLINDER	1	-
8	544084202	OIL HOSE	1	-
1	544932507	CRANKCASE ASSY *Orange*	1	-
1	544932508	CRANKCASE ASSY *Grey*	1	-
2	503875802	STIFFENING PLATE	1	-
3	503875402	BAR BOLT	1	-
4	537334601	BAR BOLT	1	-
5	544036401	BAR BOLT	1	-
6	503240905	NEEDLE ROLLER	1	-
7	530026119	CHECK VALVE	1	-
8	537403501	FILTER	1	-
9	544083301	OIL SCREEN	1	-
10	544331601	GUIDE PIN	3	-
11	503869301	SUPPORT	1	-
12	522620003	TANK CAP ASSY	1	-
13	589241101	GASKET	1	-
14	503578901	HOLDER	1	-
15	503886301	PIN	1	-
16	503218876	SCREW IHSCT	2	-
17	501007601	SUPPORT	1	-
18	503215103	SCREW IHSCT	1	-
19	544284601	CHAIN GUIDE PLATE	1	-
20	503217010	SCREW CCRPANT	1	-

Ref.	Article N.	Description	Qty	Kit
21	544286501	SPIKE	1	-
22	503217520	SCREW IHSCFT	2	-
23	544251501	HAND GUARD	1	-
24	503892401	LOCK	1	-
25	503893001	SCREW	2	-
26	503436501	POSITION SPRING	1	-
1	525604601	CRANKSHAFT ASSY -	1	-
2	544248702	BALL BEARING -	1	-
3	544251201	SEALING -	1	-
4	544248802	BALL BEARING -	1	-
5	544251301	SEALING -	1	-
6	503414101	NEEDLE BEARING -	1	-
1	504790201	CYLINDER COVER ASSY	1	-
2	522736001	LABEL	1	-
3	595303001	SNAP LOCKING	3	-
1	504735101	CYLINDER -	1	-
2	502625007	PISTON ASSY -	1	-
3	544405901	PISTON RING -	1	-
4	544406001	PISTON PIN -	1	-
5	737441000	SNAP RING -	2	-
6	503414101	NEEDLE BEARING -	1	-
7	544396001	GASKET -	1	-
8	544395901	GASKET -	1	-
9	725533355	SCREW IHSCM -	4	-
10	503235111	SPARK PLUG -	1	-
11	504794001	GASKET	1	-

Ref.	Article N.	Description	Qty	Kit
		-		
1	544193805	FUEL TANK	1	-
2	503212810	SCREW CCRPANT	1	-
3	720182520	PARALLEL PIN	1	-
4	544968501	THROTTLE CONTROL	1	-
5	544099901	SPRING	1	-
6	579239401	THROTTLE LOCKOUT	1	-
7	531246601	HANDLE INSERT *Grey soft*	1	-
8	544128604	FUEL HOSE	1	-
9	503443201	FUEL FILTER	1	-
10	577535101	RETURN HOSE	1	-
11	522620003	TANK CAP ASSY	1	-
12	589241101	GASKET	1	-
13	503578901	HOLDER	1	-
14	544375001	LABEL	1	-
15	501007601	SUPPORT	1	-
16	504795601	ANTIVIBRATION ELEMENT	2	-
17	721126339	GROOVED PIN	1	-
18	501152901	TANK VENT ASSY	1	-
1	544284001	FRONT HANDLE -	1	-
2	503218876	SCREW IHSCT -	3	-
3	503898301	ANTIVIBRATION ELEMENT -	1	-
1	580279801	FLYWHEEL ASSY -	1	-
2	537245601	STARTER PAWL -	2	-
3	501819903	SCREW -	2	-
4	503230042	WASHER -	2	-
5	529271101	SPRING -	2	-
6	503220401	NUT -	1	-
7	579638804	IGNITION MODULE -	1	-
8	510101401	WIRING ASSY	1	-

Ref.	Article N.	Description	Qty	Kit
		-		
9	503200220	SCREW IHSCFM -	2	-
1	544147702	MUFFLER ASSY -	1	-
2	579753301	SCREEN -	1	-
3	501323101	HEAT DEFLECTOR -	1	-
4	579753101	GASKET -	1	-
5	725536855	SCREW IHSCM -	2	-
6	724128759	SCREW CRPANM -	1	-
7	504794001	GASKET -	1	-
1	504597002	STARTER ASSY -	1	-
2	504596902	STARTER -	1	-
3	537283201	SLEEVE -	1	-
4	540057502	SPRING CASSETTE ASSY -	1	-
5	503212810	SCREW CCRPANT -	2	-
6	504597101	STARTER PULLEY -	1	-
7	503217716	SCREW IHSCT -	1	-
8	505305125	STARTER ROPE -	1	-
9	537232501	STARTER HANDLE -	1	-
10	503217321	SCREW -	4	-
11	504546805	LABEL -	1	-
12	544197102	AIR CONDUCTOR -	1	-
1	505450401	WINTER KIT *Winter kit*	1	-

Ref.	Article N.	Description	Qty	Kit
2	503217016	SCREW CCRPANT *Screw*	2	-
3	503405901	WINTER PLUG *Winter plug*	1	-
1	501388201	CLUTCH COVER ASSY -	0	-
2	735310820	E-CLIP -	1	-
3	537286601	PAWL -	1	-
4	540063301	CHAIN GUIDE -	1	-
5	537017401	BEARING SLEEVE -	1	-
6	503890802	KNEE JOINT ASSY -	1	-
7	505892601	BRAKE SPRING -	1	-
8	503855201	GUIDE BUSHING -	1	-
9	544248501	COVER LID -	1	-
10	503217010	SCREW CCRPANT -	7	-
11	544253101	WEAR PROTECTION -	1	-
12	544306001	BRAKE BAND ASSY -	1	-
13	503892901	PIN -	1	-
14	537397001	WORM SCREW -	1	-
15	537079402	WORM WHEEL -	1	-
16	740480702	O-RING -	1	-
17	503230063	WASHER -	1	-
18	544376801	LABEL -	1	-
19	503220001	HEXAGON NUT -	1	-

CARBURETOR AND AIR FILTER

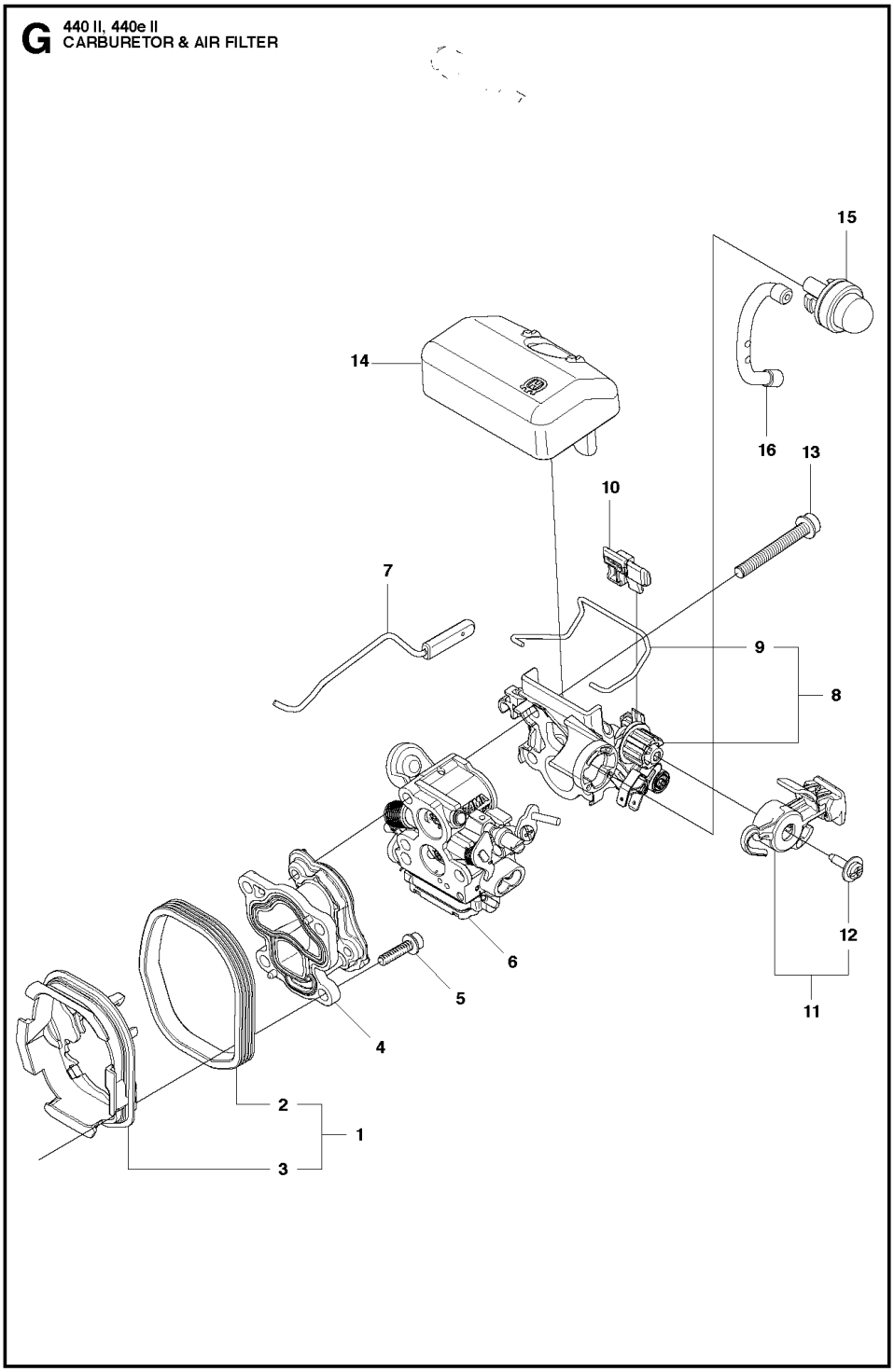

Ref.	Article N.	Description	Qty	Kit
1	501691701	COMBINATION WRENCH -	1	-
1	504724701	INSULATION WALL	1	-

Ref.	Article N.	Description	Qty	Kit
2	504724501	INSULATION WALL	1	-
3	504724401	INSULATION WALL	1	-
4	504201202	INLET PIPE	1	-
5	503200216	SCREW IHSCFM	4	-
6	547727401	CARBURETTOR *Zama Z014-120-0601-F*	1	-
7	544284401	THROTTLE ROD ASSY	1	-
8	544976402	FILTER HOLDER	1	-
9	544392601	SHACKLE	1	-
10	504712501	GUIDE	1	-
11	544844306	CONTROL	1	-
12	544976601	SCREW	1	-
13	503200240	SCREW IHSCFM	3	-
14	544805403	AIR FILTER *Non-Woven - Clear*	1	-
14	599729401	AIR FILTER ASSY *Nylon Mesh - 44 Micron Rating - Black*	1	-
15	503936601	PURGE	1	-
16	544401901	HOSE	1	-
1	547727401	CARBURETTOR *Zama Z014-120-0601-F*	1	-
2	503481101	PIECE	1	-
3	504024001	NOZZLE ASSY	1	-
4	503535601	PLUG WELCH	1	-
5	503479701	VALVE	1	-
6	537020301	SPRING	1	-
7	503665901	LEVER	1	-
8	503480001	PIN RETAINING SCREW	1	-
9	504024101	SCREW	1	-
10	505535201	HUB CAP	1	-
11	504026101	SHAFT ASSY	1	-
12	505110701	COLLAR	1	-
13	504028501	SPRING	1	-
14	504027501	VALVE	1	-
15	503481801	SCREW	2	-
16	504026701	CIRCLIP	2	-
17	504026201	SHAFT ASSY	1	-
18	540053701	LEVER	1	-
19	504028301	SPRING	1	-

Ref.	Article N.	Description	Qty	Kit
20	504026301	LEVER	1	-
21	503479001	SCREW	2	-
22	504027401	VALVE	1	-
23	503481801	SCREW	2	-
24	504026001	SHAFT ASSY	1	-
25	504028401	SPRING	1	-
26	544983101	LEVER	1	-
27	503479001	SCREW	2	-
28	504027601	VALVE	1	-
29	503479201	SCREW	1	-
30	504027301	SCREW	1	-
31	504909201	SCREW	1	-
32	504028101	SCREW	1	-
33	504024301	GASKET	1	-
34	504024501	DIAPHRAGM	1	-
35	504024601	BODY	1	-
36	504028201	SCREW	1	-
37	504025001	STRAINER	1	-
38	504025601	DIAPHRAGM	1	-
39	504025701	GASKET	1	-
40	504025901	COVER	1	-
41	504027801	SCREW	4	-
42	504028601	GASKET KIT	1	-
1	544194905	CLUTCH COVER ASSY *Orange*	1	-
1	544194915	CLUTCH COVER ASSY *Grey*	1	-
2	504542801	COVER LID	1	-
3	544306001	BRAKE BAND ASSY	1	-
4	544253101	WEAR PROTECTION	1	-
5	503855201	GUIDE BUSHING	1	-
6	505892601	BRAKE SPRING	1	-
7	544248501	COVER LID	1	-
8	503890802	KNEE JOINT ASSY	1	-
9	503892901	PIN	1	-
10	735310820	E-CLIP	1	-
11	537392901	SCREW	1	-
12	537347201	GEAR ASSY	1	-
13	537392601	HEAT PROTECTOR	1	-

Ref.	Article N.	Description	Qty	Kit
14	544357501	LABEL	1	-
15	503217010	SCREW CCRPANT	10	-
16	525354301	BEARING SLEEVE	1	-
17	505321001	WEAR PLATE	1	-
18	537347801	KNOB	1	-
1	575568001	CLUTCH ASSY	1	-
2	574718801	CLUTCH SPRING	2	-
3	505441501	CLUTCH DRUM ASSY	1	-
4	503539201	NEEDLE BEARING	1	-
5	536860001	WORM GEAR	1	-
6	540057901	PUMP PISTON	1	-
7	537154801	PUMP CYLINDER	1	-
8	544084202	OIL HOSE	1	-
1	544932507	CRANKCASE ASSY *Orange*	1	-
1	544932508	CRANKCASE ASSY *Grey*	1	-
2	503875802	STIFFENING PLATE	1	-
3	503875402	BAR BOLT	1	-
4	537334601	BAR BOLT	1	-
5	544036401	BAR BOLT	1	-
6	503240905	NEEDLE ROLLER	1	-
7	530026119	CHECK VALVE	1	-
8	537403501	FILTER	1	-
9	544083301	OIL SCREEN	1	-
10	544331601	GUIDE PIN	3	-
11	503869301	SUPPORT	1	-
12	522620003	TANK CAP ASSY	1	-
13	589241101	GASKET	1	-
14	503578901	HOLDER	1	-
15	503886301	PIN	1	-
16	503218876	SCREW IHSCT	2	-
17	501007601	SUPPORT	1	-
18	503215103	SCREW IHSCT	1	-
19	544284601	CHAIN GUIDE PLATE	1	-
20	503217010	SCREW CCRPANT	1	-
21	544286501	SPIKE	1	-
22	503217520	SCREW IHSCFT	2	-
23	544251501	HAND GUARD	1	-

Ref.	Article N.	Description	Qty	Kit
24	503892401	LOCK	1	-
25	503893001	SCREW	2	-
26	503436501	POSITION SPRING	1	-
1	525604601	CRANKSHAFT ASSY -	1	-
2	544248702	BALL BEARING -	1	-
3	544251201	SEALING -	1	-
4	544248802	BALL BEARING -	1	-
5	544251301	SEALING -	1	-
6	503414101	NEEDLE BEARING -	1	-
1	504790201	CYLINDER COVER ASSY	1	-
2	522736001	LABEL	1	-
3	595303001	SNAP LOCKING	3	-
1	504735101	CYLINDER -	1	-
2	502625007	PISTON ASSY -	1	-
3	544405901	PISTON RING -	1	-
4	544406001	PISTON PIN -	1	-
5	737441000	SNAP RING -	2	-
6	503414101	NEEDLE BEARING -	1	-
7	544396001	GASKET -	1	-
8	544395901	GASKET -	1	-
9	725533355	SCREW IHSCM -	4	-
10	503235111	SPARK PLUG -	1	-
11	504794001	GASKET -	1	-
1	544193805	FUEL TANK	1	-
2	503212810	SCREW CCRPANT	1	-

Ref.	Article N.	Description	Qty	Kit
3	720182520	PARALLEL PIN	1	-
4	544968501	THROTTLE CONTROL	1	-
5	544099901	SPRING	1	-
6	579239401	THROTTLE LOCKOUT	1	-
7	531246601	HANDLE INSERT *Grey soft*	1	-
8	544128604	FUEL HOSE	1	-
9	503443201	FUEL FILTER	1	-
10	577535101	RETURN HOSE	1	-
11	522620003	TANK CAP ASSY	1	-
12	589241101	GASKET	1	-
13	503578901	HOLDER	1	-
14	544375001	LABEL	1	-
15	501007601	SUPPORT	1	-
16	504795601	ANTIVIBRATION ELEMENT	2	-
17	721126339	GROOVED PIN	1	-
18	501152901	TANK VENT ASSY	1	-
1	544284001	FRONT HANDLE -	1	-
2	503218876	SCREW IHSCT -	3	-
3	503898301	ANTIVIBRATION ELEMENT -	1	-
1	580279801	FLYWHEEL ASSY -	1	-
2	537245601	STARTER PAWL -	2	-
3	501819903	SCREW -	2	-
4	503230042	WASHER -	2	-
5	529271101	SPRING -	2	-
6	503220401	NUT -	1	-
7	579638804	IGNITION MODULE -	1	-
8	510101401	WIRING ASSY -	1	-
9	503200220	SCREW IHSCFM -	2	-

Ref.	Article N.	Description	Qty	Kit
1	544147702	MUFFLER ASSY -	1	-
2	579753301	SCREEN -	1	-
3	501323101	HEAT DEFLECTOR -	1	-
4	579753101	GASKET -	1	-
5	725536855	SCREW IHSCM -	2	-
6	724128759	SCREW CRPANM -	1	-
7	504794001	GASKET -	1	-
1	504597002	STARTER ASSY -	1	-
2	504596902	STARTER -	1	-
3	537283201	SLEEVE -	1	-
4	540057502	SPRING CASSETTE ASSY -	1	-
5	503212810	SCREW CCRPANT -	2	-
6	504597101	STARTER PULLEY -	1	-
7	503217716	SCREW IHSCT -	1	-
8	505305125	STARTER ROPE -	1	-
9	537232501	STARTER HANDLE -	1	-
10	503217321	SCREW -	4	-
11	504546805	LABEL -	1	-
12	544197102	AIR CONDUCTOR -	1	-
1	505450401	WINTER KIT *Winter kit*	1	-
2	503217016	SCREW CCRPANT *Screw*	2	-
3	503405901	WINTER PLUG	1	-

Ref.	Article N.	Description	Qty	Kit
		Winter plug		
1	501388201	CLUTCH COVER ASSY -	0	-
2	735310820	E-CLIP -	1	-
3	537286601	PAWL -	1	-
4	540063301	CHAIN GUIDE -	1	-
5	537017401	BEARING SLEEVE -	1	-
6	503890802	KNEE JOINT ASSY -	1	-
7	505892601	BRAKE SPRING -	1	-
8	503855201	GUIDE BUSHING -	1	-
9	544248501	COVER LID -	1	-
10	503217010	SCREW CCRPANT -	7	-
11	544253101	WEAR PROTECTION -	1	-
12	544306001	BRAKE BAND ASSY -	1	-
13	503892901	PIN -	1	-
14	537397001	WORM SCREW -	1	-
15	537079402	WORM WHEEL -	1	-
16	740480702	O-RING -	1	-
17	503230063	WASHER -	1	-
18	544376801	LABEL -	1	-
19	503220001	HEXAGON NUT -	1	-

CARBURETOR

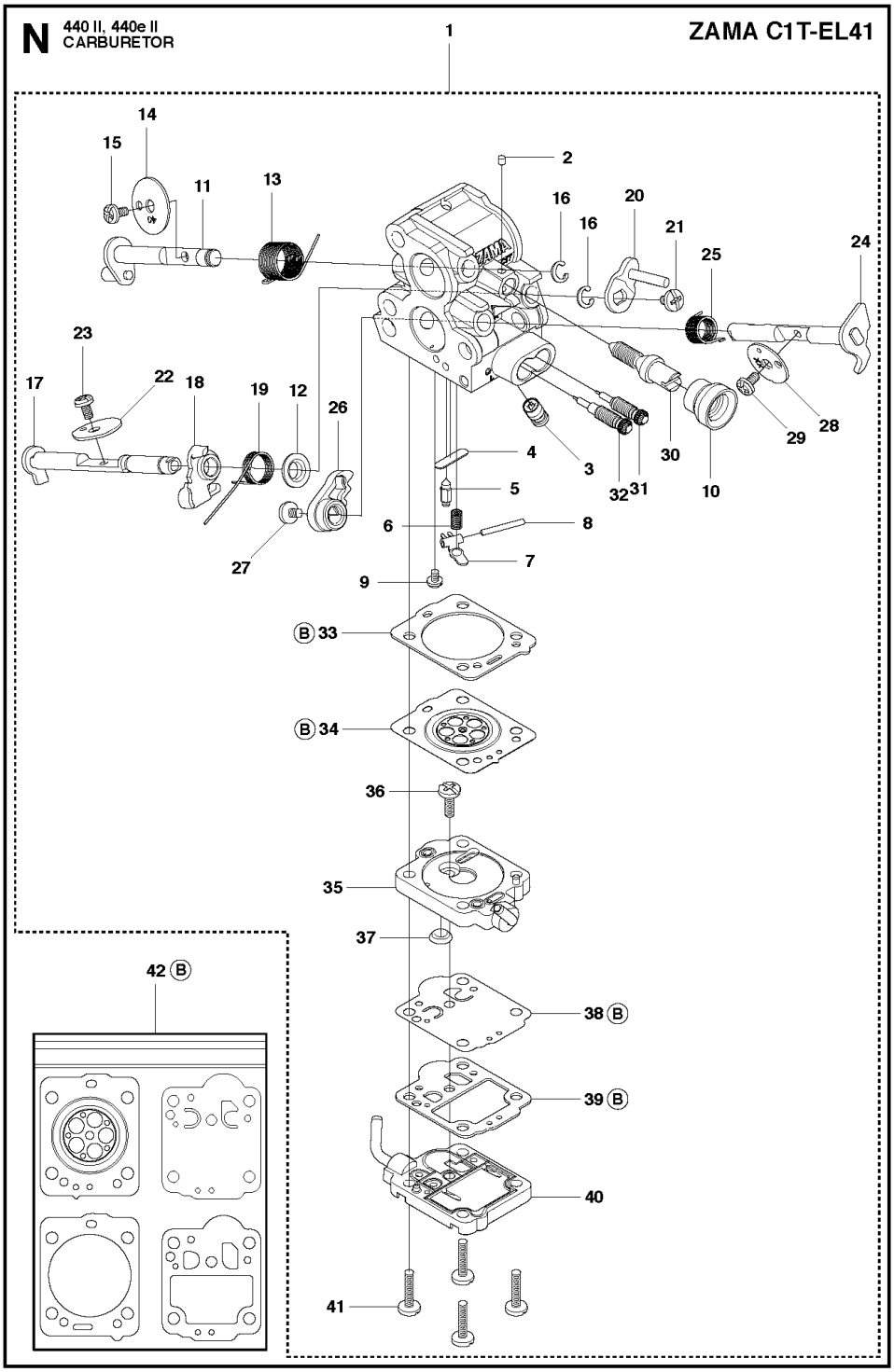

Ref.	Article N.	Description	Qty	Kit
1	501691701	COMBINATION WRENCH -	1	-
1	504724701	INSULATION WALL	1	-
2	504724501	INSULATION WALL	1	-
3	504724401	INSULATION WALL	1	-
4	504201202	INLET PIPE	1	-

Ref.	Article N.	Description	Qty	Kit
5	503200216	SCREW IHSCFM	4	-
6	547727401	CARBURETTOR *Zama Z014-120-0601-F*	1	-
7	544284401	THROTTLE ROD ASSY	1	-
8	544976402	FILTER HOLDER	1	-
9	544392601	SHACKLE	1	-
10	504712501	GUIDE	1	-
11	544844306	CONTROL	1	-
12	544976601	SCREW	1	-
13	503200240	SCREW IHSCFM	3	-
14	544805403	AIR FILTER *Non-Woven - Clear*	1	-
14	599729401	AIR FILTER ASSY *Nylon Mesh - 44 Micron Rating - Black*	1	-
15	503936601	PURGE	1	-
16	544401901	HOSE	1	-
1	547727401	CARBURETTOR *Zama Z014-120-0601-F*	1	-
2	503481101	PIECE	1	-
3	504024001	NOZZLE ASSY	1	-
4	503535601	PLUG WELCH	1	-
5	503479701	VALVE	1	-
6	537020301	SPRING	1	-
7	503665901	LEVER	1	-
8	503480001	PIN RETAINING SCREW	1	-
9	504024101	SCREW	1	-
10	505535201	HUB CAP	1	-
11	504026101	SHAFT ASSY	1	-
12	505110701	COLLAR	1	-
13	504028501	SPRING	1	-
14	504027501	VALVE	1	-
15	503481801	SCREW	2	-
16	504026701	CIRCLIP	2	-
17	504026201	SHAFT ASSY	1	-
18	540053701	LEVER	1	-
19	504028301	SPRING	1	-
20	504026301	LEVER	1	-
21	503479001	SCREW	2	-
22	504027401	VALVE	1	-

Ref.	Article N.	Description	Qty	Kit
23	503481801	SCREW	2	-
24	504026001	SHAFT ASSY	1	-
25	504028401	SPRING	1	-
26	544983101	LEVER	1	-
27	503479001	SCREW	2	-
28	504027601	VALVE	1	-
29	503479201	SCREW	1	-
30	504027301	SCREW	1	-
31	504909201	SCREW	1	-
32	504028101	SCREW	1	-
33	504024301	GASKET	1	-
34	504024501	DIAPHRAGM	1	-
35	504024601	BODY	1	-
36	504028201	SCREW	1	-
37	504025001	STRAINER	1	-
38	504025601	DIAPHRAGM	1	-
39	504025701	GASKET	1	-
40	504025901	COVER	1	-
41	504027801	SCREW	4	-
42	504028601	GASKET KIT	1	-
1	544194905	CLUTCH COVER ASSY *Orange*	1	-
1	544194915	CLUTCH COVER ASSY *Grey*	1	-
2	504542801	COVER LID	1	-
3	544306001	BRAKE BAND ASSY	1	-
4	544253101	WEAR PROTECTION	1	-
5	503855201	GUIDE BUSHING	1	-
6	505892601	BRAKE SPRING	1	-
7	544248501	COVER LID	1	-
8	503890802	KNEE JOINT ASSY	1	-
9	503892901	PIN	1	-
10	735310820	E-CLIP	1	-
11	537392901	SCREW	1	-
12	537347201	GEAR ASSY	1	-
13	537392601	HEAT PROTECTOR	1	-
14	544357501	LABEL	1	-
15	503217010	SCREW CCRPANT	10	-
16	525354301	BEARING SLEEVE	1	-

Ref.	Article N.	Description	Qty	Kit
17	505321001	WEAR PLATE	1	-
18	537347801	KNOB	1	-
1	575568001	CLUTCH ASSY	1	-
2	574718801	CLUTCH SPRING	2	-
3	505441501	CLUTCH DRUM ASSY	1	-
4	503539201	NEEDLE BEARING	1	-
5	536860001	WORM GEAR	1	-
6	540057901	PUMP PISTON	1	-
7	537154801	PUMP CYLINDER	1	-
8	544084202	OIL HOSE	1	-
1	544932507	CRANKCASE ASSY *Orange*	1	-
1	544932508	CRANKCASE ASSY *Grey*	1	-
2	503875802	STIFFENING PLATE	1	-
3	503875402	BAR BOLT	1	-
4	537334601	BAR BOLT	1	-
5	544036401	BAR BOLT	1	-
6	503240905	NEEDLE ROLLER	1	-
7	530026119	CHECK VALVE	1	-
8	537403501	FILTER	1	-
9	544083301	OIL SCREEN	1	-
10	544331601	GUIDE PIN	3	-
11	503869301	SUPPORT	1	-
12	522620003	TANK CAP ASSY	1	-
13	589241101	GASKET	1	-
14	503578901	HOLDER	1	-
15	503886301	PIN	1	-
16	503218876	SCREW IHSCT	2	-
17	501007601	SUPPORT	1	-
18	503215103	SCREW IHSCT	1	-
19	544284601	CHAIN GUIDE PLATE	1	-
20	503217010	SCREW CCRPANT	1	-
21	544286501	SPIKE	1	-
22	503217520	SCREW IHSCFT	2	-
23	544251501	HAND GUARD	1	-
24	503892401	LOCK	1	-
25	503893001	SCREW	2	-
26	503436501	POSITION SPRING	1	-

Ref.	Article N.	Description	Qty	Kit
1	525604601	CRANKSHAFT ASSY -	1	-
2	544248702	BALL BEARING -	1	-
3	544251201	SEALING -	1	-
4	544248802	BALL BEARING -	1	-
5	544251301	SEALING -	1	-
6	503414101	NEEDLE BEARING -	1	-
1	504790201	CYLINDER COVER ASSY	1	-
2	522736001	LABEL	1	-
3	595303001	SNAP LOCKING	3	-
1	504735101	CYLINDER -	1	-
2	502625007	PISTON ASSY -	1	-
3	544405901	PISTON RING -	1	-
4	544406001	PISTON PIN -	1	-
5	737441000	SNAP RING -	2	-
6	503414101	NEEDLE BEARING -	1	-
7	544396001	GASKET -	1	-
8	544395901	GASKET -	1	-
9	725533355	SCREW IHSCM -	4	-
10	503235111	SPARK PLUG -	1	-
11	504794001	GASKET -	1	-
1	544193805	FUEL TANK	1	-
2	503212810	SCREW CCRPANT	1	-
3	720182520	PARALLEL PIN	1	-
4	544968501	THROTTLE CONTROL	1	-
5	544099901	SPRING	1	-

Ref.	Article N.	Description	Qty	Kit
6	579239401	THROTTLE LOCKOUT	1	-
7	531246601	HANDLE INSERT *Grey soft*	1	-
8	544128604	FUEL HOSE	1	-
9	503443201	FUEL FILTER	1	-
10	577535101	RETURN HOSE	1	-
11	522620003	TANK CAP ASSY	1	-
12	589241101	GASKET	1	-
13	503578901	HOLDER	1	-
14	544375001	LABEL	1	-
15	501007601	SUPPORT	1	-
16	504795601	ANTIVIBRATION ELEMENT	2	-
17	721126339	GROOVED PIN	1	-
18	501152901	TANK VENT ASSY	1	-
1	544284001	FRONT HANDLE -	1	-
2	503218876	SCREW IHSCT -	3	-
3	503898301	ANTIVIBRATION ELEMENT -	1	-
1	580279801	FLYWHEEL ASSY -	1	-
2	537245601	STARTER PAWL -	2	-
3	501819903	SCREW -	2	-
4	503230042	WASHER -	2	-
5	529271101	SPRING -	2	-
6	503220401	NUT -	1	-
7	579638804	IGNITION MODULE -	1	-
8	510101401	WIRING ASSY -	1	-
9	503200220	SCREW IHSCFM -	2	-
1	544147702	MUFFLER ASSY -	1	-
2	579753301	SCREEN -	1	-

Ref.	Article N.	Description	Qty	Kit
3	501323101	HEAT DEFLECTOR -	1	-
4	579753101	GASKET -	1	-
5	725536855	SCREW IHSCM -	2	-
6	724128759	SCREW CRPANM -	1	-
7	504794001	GASKET -	1	-
1	504597002	STARTER ASSY -	1	-
2	504596902	STARTER -	1	-
3	537283201	SLEEVE -	1	-
4	540057502	SPRING CASSETTE ASSY -	1	-
5	503212810	SCREW CCRPANT -	2	-
6	504597101	STARTER PULLEY -	1	-
7	503217716	SCREW IHSCT -	1	-
8	505305125	STARTER ROPE -	1	-
9	537232501	STARTER HANDLE -	1	-
10	503217321	SCREW -	4	-
11	504546805	LABEL -	1	-
12	544197102	AIR CONDUCTOR -	1	-
1	505450401	WINTER KIT *Winter kit*	1	-
2	503217016	SCREW CCRPANT *Screw*	2	-
3	503405901	WINTER PLUG *Winter plug*	1	-
1	501388201	CLUTCH COVER ASSY -	0	-
2	735310820	E-CLIP	1	-

Ref.	Article N.	Description	Qty	Kit
		-		
3	537286601	PAWL -	1	-
4	540063301	CHAIN GUIDE -	1	-
5	537017401	BEARING SLEEVE -	1	-
6	503890802	KNEE JOINT ASSY -	1	-
7	505892601	BRAKE SPRING -	1	-
8	503855201	GUIDE BUSHING -	1	-
9	544248501	COVER LID -	1	-
10	503217010	SCREW CCRPANT -	7	-
11	544253101	WEAR PROTECTION -	1	-
12	544306001	BRAKE BAND ASSY -	1	-
13	503892901	PIN -	1	-
14	537397001	WORM SCREW -	1	-
15	537079402	WORM WHEEL -	1	-
16	740480702	O-RING -	1	-
17	503230063	WASHER -	1	-
18	544376801	LABEL -	1	-
19	503220001	HEXAGON NUT -	1	-

CHAIN BRAKE AND CLUTCH COVER

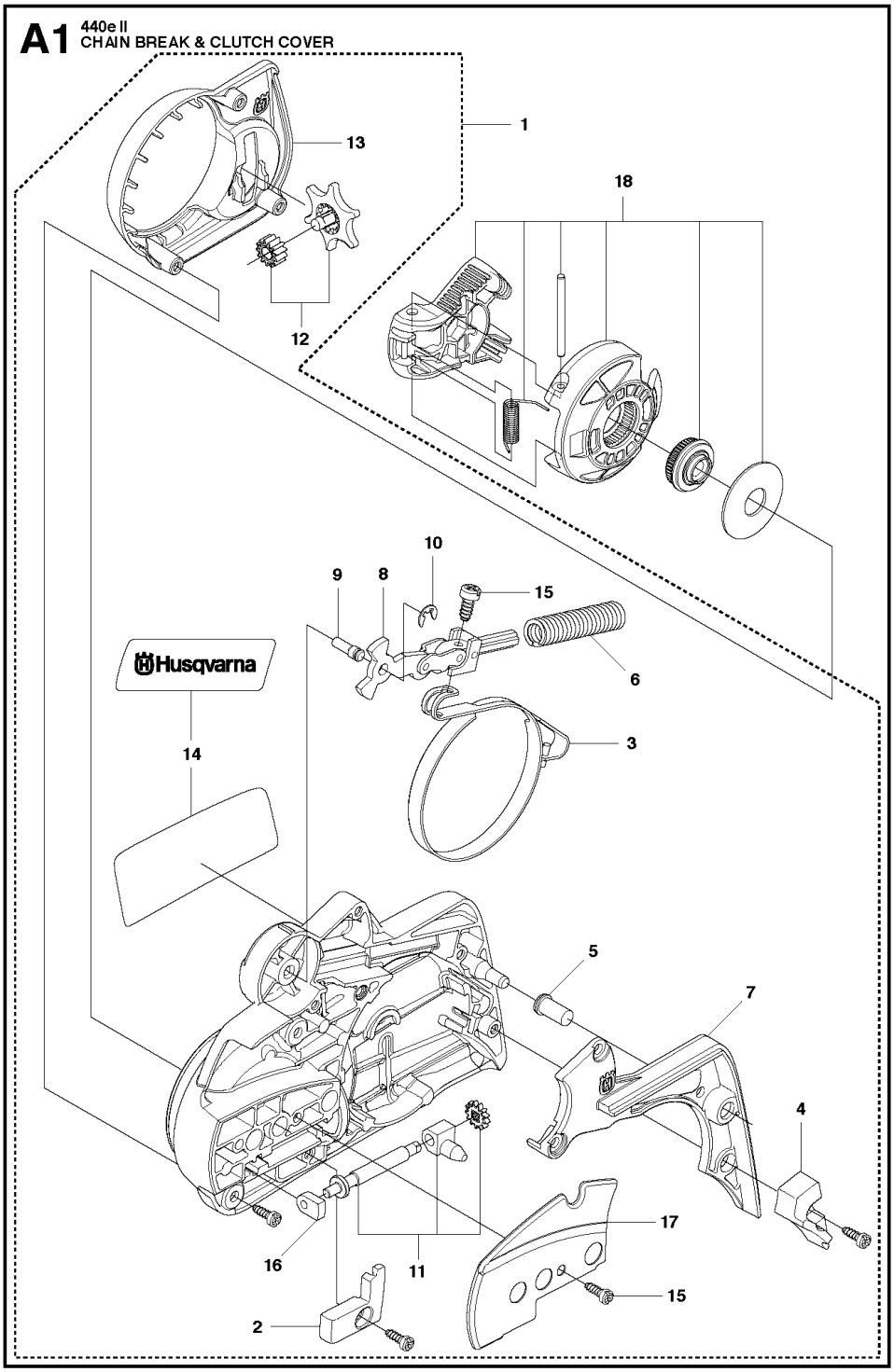

Ref.	Article N.	Description	Qty	Kit
1	501691701	COMBINATION WRENCH -	1	-
1	504724701	INSULATION WALL	1	-
2	504724501	INSULATION WALL	1	-
3	504724401	INSULATION WALL	1	-
4	504201202	INLET PIPE	1	-

Ref.	Article N.	Description	Qty	Kit
5	503200216	SCREW IHSCFM	4	-
6	547727401	CARBURETTOR *Zama Z014-120-0601-F*	1	-
7	544284401	THROTTLE ROD ASSY	1	-
8	544976402	FILTER HOLDER	1	-
9	544392601	SHACKLE	1	-
10	504712501	GUIDE	1	-
11	544844306	CONTROL	1	-
12	544976601	SCREW	1	-
13	503200240	SCREW IHSCFM	3	-
14	544805403	AIR FILTER *Non-Woven - Clear*	1	-
14	599729401	AIR FILTER ASSY *Nylon Mesh - 44 Micron Rating - Black*	1	-
15	503936601	PURGE	1	-
16	544401901	HOSE	1	-
1	547727401	CARBURETTOR *Zama Z014-120-0601-F*	1	-
2	503481101	PIECE	1	-
3	504024001	NOZZLE ASSY	1	-
4	503535601	PLUG WELCH	1	-
5	503479701	VALVE	1	-
6	537020301	SPRING	1	-
7	503665901	LEVER	1	-
8	503480001	PIN RETAINING SCREW	1	-
9	504024101	SCREW	1	-
10	505535201	HUB CAP	1	-
11	504026101	SHAFT ASSY	1	-
12	505110701	COLLAR	1	-
13	504028501	SPRING	1	-
14	504027501	VALVE	1	-
15	503481801	SCREW	2	-
16	504026701	CIRCLIP	2	-
17	504026201	SHAFT ASSY	1	-
18	540053701	LEVER	1	-
19	504028301	SPRING	1	-
20	504026301	LEVER	1	-
21	503479001	SCREW	2	-
22	504027401	VALVE	1	-

Ref.	Article N.	Description	Qty	Kit
23	503481801	SCREW	2	-
24	504026001	SHAFT ASSY	1	-
25	504028401	SPRING	1	-
26	544983101	LEVER	1	-
27	503479001	SCREW	2	-
28	504027601	VALVE	1	-
29	503479201	SCREW	1	-
30	504027301	SCREW	1	-
31	504909201	SCREW	1	-
32	504028101	SCREW	1	-
33	504024301	GASKET	1	-
34	504024501	DIAPHRAGM	1	-
35	504024601	BODY	1	-
36	504028201	SCREW	1	-
37	504025001	STRAINER	1	-
38	504025601	DIAPHRAGM	1	-
39	504025701	GASKET	1	-
40	504025901	COVER	1	-
41	504027801	SCREW	4	-
42	504028601	GASKET KIT	1	-
1	544194905	CLUTCH COVER ASSY *Orange*	1	-
1	544194915	CLUTCH COVER ASSY *Grey*	1	-
2	504542801	COVER LID	1	-
3	544306001	BRAKE BAND ASSY	1	-
4	544253101	WEAR PROTECTION	1	-
5	503855201	GUIDE BUSHING	1	-
6	505892601	BRAKE SPRING	1	-
7	544248501	COVER LID	1	-
8	503890802	KNEE JOINT ASSY	1	-
9	503892901	PIN	1	-
10	735310820	E-CLIP	1	-
11	537392901	SCREW	1	-
12	537347201	GEAR ASSY	1	-
13	537392601	HEAT PROTECTOR	1	-
14	544357501	LABEL	1	-
15	503217010	SCREW CCRPANT	10	-
16	525354301	BEARING SLEEVE	1	-

Ref.	Article N.	Description	Qty	Kit
17	505321001	WEAR PLATE	1	-
18	537347801	KNOB	1	-
1	575568001	CLUTCH ASSY	1	-
2	574718801	CLUTCH SPRING	2	-
3	505441501	CLUTCH DRUM ASSY	1	-
4	503539201	NEEDLE BEARING	1	-
5	536860001	WORM GEAR	1	-
6	540057901	PUMP PISTON	1	-
7	537154801	PUMP CYLINDER	1	-
8	544084202	OIL HOSE	1	-
1	544932507	CRANKCASE ASSY *Orange*	1	-
1	544932508	CRANKCASE ASSY *Grey*	1	-
2	503875802	STIFFENING PLATE	1	-
3	503875402	BAR BOLT	1	-
4	537334601	BAR BOLT	1	-
5	544036401	BAR BOLT	1	-
6	503240905	NEEDLE ROLLER	1	-
7	530026119	CHECK VALVE	1	-
8	537403501	FILTER	1	-
9	544083301	OIL SCREEN	1	-
10	544331601	GUIDE PIN	3	-
11	503869301	SUPPORT	1	-
12	522620003	TANK CAP ASSY	1	-
13	589241101	GASKET	1	-
14	503578901	HOLDER	1	-
15	503886301	PIN	1	-
16	503218876	SCREW IHSCT	2	-
17	501007601	SUPPORT	1	-
18	503215103	SCREW IHSCT	1	-
19	544284601	CHAIN GUIDE PLATE	1	-
20	503217010	SCREW CCRPANT	1	-
21	544286501	SPIKE	1	-
22	503217520	SCREW IHSCFT	2	-
23	544251501	HAND GUARD	1	-
24	503892401	LOCK	1	-
25	503893001	SCREW	2	-
26	503436501	POSITION SPRING	1	-

Ref.	Article N.	Description	Qty	Kit
1	525604601	CRANKSHAFT ASSY -	1	-
2	544248702	BALL BEARING -	1	-
3	544251201	SEALING -	1	-
4	544248802	BALL BEARING -	1	-
5	544251301	SEALING -	1	-
6	503414101	NEEDLE BEARING -	1	-
1	504790201	CYLINDER COVER ASSY	1	-
2	522736001	LABEL	1	-
3	595303001	SNAP LOCKING	3	-
1	504735101	CYLINDER -	1	-
2	502625007	PISTON ASSY -	1	-
3	544405901	PISTON RING -	1	-
4	544406001	PISTON PIN -	1	-
5	737441000	SNAP RING -	2	-
6	503414101	NEEDLE BEARING -	1	-
7	544396001	GASKET -	1	-
8	544395901	GASKET -	1	-
9	725533355	SCREW IHSCM -	4	-
10	503235111	SPARK PLUG -	1	-
11	504794001	GASKET -	1	-
1	544193805	FUEL TANK	1	-
2	503212810	SCREW CCRPANT	1	-
3	720182520	PARALLEL PIN	1	-
4	544968501	THROTTLE CONTROL	1	-
5	544099901	SPRING	1	-

Ref.	Article N.	Description	Qty	Kit
6	579239401	THROTTLE LOCKOUT	1	-
7	531246601	HANDLE INSERT *Grey soft*	1	-
8	544128604	FUEL HOSE	1	-
9	503443201	FUEL FILTER	1	-
10	577535101	RETURN HOSE	1	-
11	522620003	TANK CAP ASSY	1	-
12	589241101	GASKET	1	-
13	503578901	HOLDER	1	-
14	544375001	LABEL	1	-
15	501007601	SUPPORT	1	-
16	504795601	ANTIVIBRATION ELEMENT	2	-
17	721126339	GROOVED PIN	1	-
18	501152901	TANK VENT ASSY	1	-
1	544284001	FRONT HANDLE -	1	-
2	503218876	SCREW IHSCT -	3	-
3	503898301	ANTIVIBRATION ELEMENT -	1	-
1	580279801	FLYWHEEL ASSY -	1	-
2	537245601	STARTER PAWL -	2	-
3	501819903	SCREW -	2	-
4	503230042	WASHER -	2	-
5	529271101	SPRING -	2	-
6	503220401	NUT -	1	-
7	579638804	IGNITION MODULE -	1	-
8	510101401	WIRING ASSY -	1	-
9	503200220	SCREW IHSCFM -	2	-
1	544147702	MUFFLER ASSY -	1	-
2	579753301	SCREEN -	1	-

Ref.	Article N.	Description	Qty	Kit
3	501323101	HEAT DEFLECTOR -	1	-
4	579753101	GASKET -	1	-
5	725536855	SCREW IHSCM -	2	-
6	724128759	SCREW CRPANM -	1	-
7	504794001	GASKET -	1	-
1	504597002	STARTER ASSY -	1	-
2	504596902	STARTER -	1	-
3	537283201	SLEEVE -	1	-
4	540057502	SPRING CASSETTE ASSY -	1	-
5	503212810	SCREW CCRPANT -	2	-
6	504597101	STARTER PULLEY -	1	-
7	503217716	SCREW IHSCT -	1	-
8	505305125	STARTER ROPE -	1	-
9	537232501	STARTER HANDLE -	1	-
10	503217321	SCREW -	4	-
11	504546805	LABEL -	1	-
12	544197102	AIR CONDUCTOR -	1	-
1	505450401	WINTER KIT *Winter kit*	1	-
2	503217016	SCREW CCRPANT *Screw*	2	-
3	503405901	WINTER PLUG *Winter plug*	1	-
1	501388201	CLUTCH COVER ASSY -	0	-
2	735310820	E-CLIP	1	-

Ref.	Article N.	Description	Qty	Kit
		-		
3	537286601	PAWL -	1	-
4	540063301	CHAIN GUIDE -	1	-
5	537017401	BEARING SLEEVE -	1	-
6	503890802	KNEE JOINT ASSY -	1	-
7	505892601	BRAKE SPRING -	1	-
8	503855201	GUIDE BUSHING -	1	-
9	544248501	COVER LID -	1	-
10	503217010	SCREW CCRPANT -	7	-
11	544253101	WEAR PROTECTION -	1	-
12	544306001	BRAKE BAND ASSY -	1	-
13	503892901	PIN -	1	-
14	537397001	WORM SCREW -	1	-
15	537079402	WORM WHEEL -	1	-
16	740480702	O-RING -	1	-
17	503230063	WASHER -	1	-
18	544376801	LABEL -	1	-
19	503220001	HEXAGON NUT -	1	-

CLUTCH AND OIL PUMP

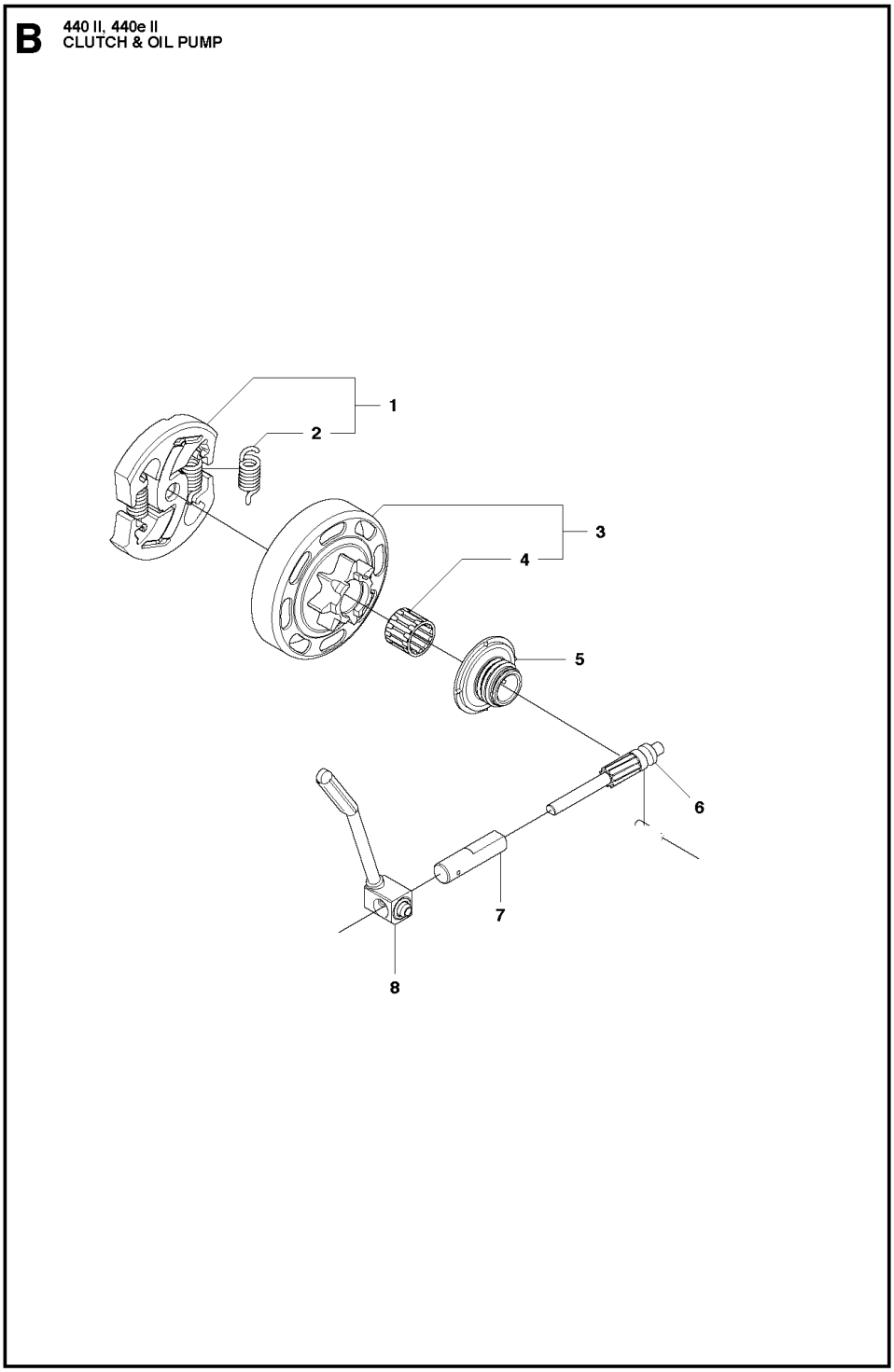

Ref.	Article N.	Description	Qty	Kit
1	501691701	COMBINATION WRENCH -	1	-
1	504724701	INSULATION WALL	1	-
2	504724501	INSULATION WALL	1	-
3	504724401	INSULATION WALL	1	-
4	504201202	INLET PIPE	1	-

Ref.	Article N.	Description	Qty	Kit
5	503200216	SCREW IHSCFM	4	-
6	547727401	CARBURETTOR *Zama Z014-120-0601-F*	1	-
7	544284401	THROTTLE ROD ASSY	1	-
8	544976402	FILTER HOLDER	1	-
9	544392601	SHACKLE	1	-
10	504712501	GUIDE	1	-
11	544844306	CONTROL	1	-
12	544976601	SCREW	1	-
13	503200240	SCREW IHSCFM	3	-
14	544805403	AIR FILTER *Non-Woven - Clear*	1	-
14	599729401	AIR FILTER ASSY *Nylon Mesh - 44 Micron Rating - Black*	1	-
15	503936601	PURGE	1	-
16	544401901	HOSE	1	-
1	547727401	CARBURETTOR *Zama Z014-120-0601-F*	1	-
2	503481101	PIECE	1	-
3	504024001	NOZZLE ASSY	1	-
4	503535601	PLUG WELCH	1	-
5	503479701	VALVE	1	-
6	537020301	SPRING	1	-
7	503665901	LEVER	1	-
8	503480001	PIN RETAINING SCREW	1	-
9	504024101	SCREW	1	-
10	505535201	HUB CAP	1	-
11	504026101	SHAFT ASSY	1	-
12	505110701	COLLAR	1	-
13	504028501	SPRING	1	-
14	504027501	VALVE	1	-
15	503481801	SCREW	2	-
16	504026701	CIRCLIP	2	-
17	504026201	SHAFT ASSY	1	-
18	540053701	LEVER	1	-
19	504028301	SPRING	1	-
20	504026301	LEVER	1	-
21	503479001	SCREW	2	-
22	504027401	VALVE	1	-

Ref.	Article N.	Description	Qty	Kit
23	503481801	SCREW	2	-
24	504026001	SHAFT ASSY	1	-
25	504028401	SPRING	1	-
26	544983101	LEVER	1	-
27	503479001	SCREW	2	-
28	504027601	VALVE	1	-
29	503479201	SCREW	1	-
30	504027301	SCREW	1	-
31	504909201	SCREW	1	-
32	504028101	SCREW	1	-
33	504024301	GASKET	1	-
34	504024501	DIAPHRAGM	1	-
35	504024601	BODY	1	-
36	504028201	SCREW	1	-
37	504025001	STRAINER	1	-
38	504025601	DIAPHRAGM	1	-
39	504025701	GASKET	1	-
40	504025901	COVER	1	-
41	504027801	SCREW	4	-
42	504028601	GASKET KIT	1	-
1	544194905	CLUTCH COVER ASSY *Orange*	1	-
1	544194915	CLUTCH COVER ASSY *Grey*	1	-
2	504542801	COVER LID	1	-
3	544306001	BRAKE BAND ASSY	1	-
4	544253101	WEAR PROTECTION	1	-
5	503855201	GUIDE BUSHING	1	-
6	505892601	BRAKE SPRING	1	-
7	544248501	COVER LID	1	-
8	503890802	KNEE JOINT ASSY	1	-
9	503892901	PIN	1	-
10	735310820	E-CLIP	1	-
11	537392901	SCREW	1	-
12	537347201	GEAR ASSY	1	-
13	537392601	HEAT PROTECTOR	1	-
14	544357501	LABEL	1	-
15	503217010	SCREW CCRPANT	10	-
16	525354301	BEARING SLEEVE	1	-

Ref.	Article N.	Description	Qty	Kit
17	505321001	WEAR PLATE	1	-
18	537347801	KNOB	1	-
1	575568001	CLUTCH ASSY	1	-
2	574718801	CLUTCH SPRING	2	-
3	505441501	CLUTCH DRUM ASSY	1	-
4	503539201	NEEDLE BEARING	1	-
5	536860001	WORM GEAR	1	-
6	540057901	PUMP PISTON	1	-
7	537154801	PUMP CYLINDER	1	-
8	544084202	OIL HOSE	1	-
1	544932507	CRANKCASE ASSY *Orange*	1	-
1	544932508	CRANKCASE ASSY *Grey*	1	-
2	503875802	STIFFENING PLATE	1	-
3	503875402	BAR BOLT	1	-
4	537334601	BAR BOLT	1	-
5	544036401	BAR BOLT	1	-
6	503240905	NEEDLE ROLLER	1	-
7	530026119	CHECK VALVE	1	-
8	537403501	FILTER	1	-
9	544083301	OIL SCREEN	1	-
10	544331601	GUIDE PIN	3	-
11	503869301	SUPPORT	1	-
12	522620003	TANK CAP ASSY	1	-
13	589241101	GASKET	1	-
14	503578901	HOLDER	1	-
15	503886301	PIN	1	-
16	503218876	SCREW IHSCT	2	-
17	501007601	SUPPORT	1	-
18	503215103	SCREW IHSCT	1	-
19	544284601	CHAIN GUIDE PLATE	1	-
20	503217010	SCREW CCRPANT	1	-
21	544286501	SPIKE	1	-
22	503217520	SCREW IHSCFT	2	-
23	544251501	HAND GUARD	1	-
24	503892401	LOCK	1	-
25	503893001	SCREW	2	-
26	503436501	POSITION SPRING	1	-

Ref.	Article N.	Description	Qty	Kit
1	525604601	CRANKSHAFT ASSY -	1	-
2	544248702	BALL BEARING -	1	-
3	544251201	SEALING -	1	-
4	544248802	BALL BEARING -	1	-
5	544251301	SEALING -	1	-
6	503414101	NEEDLE BEARING -	1	-
1	504790201	CYLINDER COVER ASSY	1	-
2	522736001	LABEL	1	-
3	595303001	SNAP LOCKING	3	-
1	504735101	CYLINDER -	1	-
2	502625007	PISTON ASSY -	1	-
3	544405901	PISTON RING -	1	-
4	544406001	PISTON PIN -	1	-
5	737441000	SNAP RING -	2	-
6	503414101	NEEDLE BEARING -	1	-
7	544396001	GASKET -	1	-
8	544395901	GASKET -	1	-
9	725533355	SCREW IHSCM -	4	-
10	503235111	SPARK PLUG -	1	-
11	504794001	GASKET -	1	-
1	544193805	FUEL TANK	1	-
2	503212810	SCREW CCRPANT	1	-
3	720182520	PARALLEL PIN	1	-
4	544968501	THROTTLE CONTROL	1	-
5	544099901	SPRING	1	-

Ref.	Article N.	Description	Qty	Kit
6	579239401	THROTTLE LOCKOUT	1	-
7	531246601	HANDLE INSERT *Grey soft*	1	-
8	544128604	FUEL HOSE	1	-
9	503443201	FUEL FILTER	1	-
10	577535101	RETURN HOSE	1	-
11	522620003	TANK CAP ASSY	1	-
12	589241101	GASKET	1	-
13	503578901	HOLDER	1	-
14	544375001	LABEL	1	-
15	501007601	SUPPORT	1	-
16	504795601	ANTIVIBRATION ELEMENT	2	-
17	721126339	GROOVED PIN	1	-
18	501152901	TANK VENT ASSY	1	-
1	544284001	FRONT HANDLE -	1	-
2	503218876	SCREW IHSCT -	3	-
3	503898301	ANTIVIBRATION ELEMENT -	1	-
1	580279801	FLYWHEEL ASSY -	1	-
2	537245601	STARTER PAWL -	2	-
3	501819903	SCREW -	2	-
4	503230042	WASHER -	2	-
5	529271101	SPRING -	2	-
6	503220401	NUT -	1	-
7	579638804	IGNITION MODULE -	1	-
8	510101401	WIRING ASSY -	1	-
9	503200220	SCREW IHSCFM -	2	-
1	544147702	MUFFLER ASSY -	1	-
2	579753301	SCREEN -	1	-

Ref.	Article N.	Description	Qty	Kit
3	501323101	HEAT DEFLECTOR -	1	-
4	579753101	GASKET -	1	-
5	725536855	SCREW IHSCM -	2	-
6	724128759	SCREW CRPANM -	1	-
7	504794001	GASKET -	1	-
1	504597002	STARTER ASSY -	1	-
2	504596902	STARTER -	1	-
3	537283201	SLEEVE -	1	-
4	540057502	SPRING CASSETTE ASSY -	1	-
5	503212810	SCREW CCRPANT -	2	-
6	504597101	STARTER PULLEY -	1	-
7	503217716	SCREW IHSCT -	1	-
8	505305125	STARTER ROPE -	1	-
9	537232501	STARTER HANDLE -	1	-
10	503217321	SCREW -	4	-
11	504546805	LABEL -	1	-
12	544197102	AIR CONDUCTOR -	1	-
1	505450401	WINTER KIT *Winter kit*	1	-
2	503217016	SCREW CCRPANT *Screw*	2	-
3	503405901	WINTER PLUG *Winter plug*	1	-
1	501388201	CLUTCH COVER ASSY -	0	-
2	735310820	E-CLIP	1	-

Ref.	Article N.	Description	Qty	Kit
		-		
3	537286601	PAWL -	1	-
4	540063301	CHAIN GUIDE -	1	-
5	537017401	BEARING SLEEVE -	1	-
6	503890802	KNEE JOINT ASSY -	1	-
7	505892601	BRAKE SPRING -	1	-
8	503855201	GUIDE BUSHING -	1	-
9	544248501	COVER LID -	1	-
10	503217010	SCREW CCRPANT -	7	-
11	544253101	WEAR PROTECTION -	1	-
12	544306001	BRAKE BAND ASSY -	1	-
13	503892901	PIN -	1	-
14	537397001	WORM SCREW -	1	-
15	537079402	WORM WHEEL -	1	-
16	740480702	O-RING -	1	-
17	503230063	WASHER -	1	-
18	544376801	LABEL -	1	-
19	503220001	HEXAGON NUT -	1	-

CRANKCASE

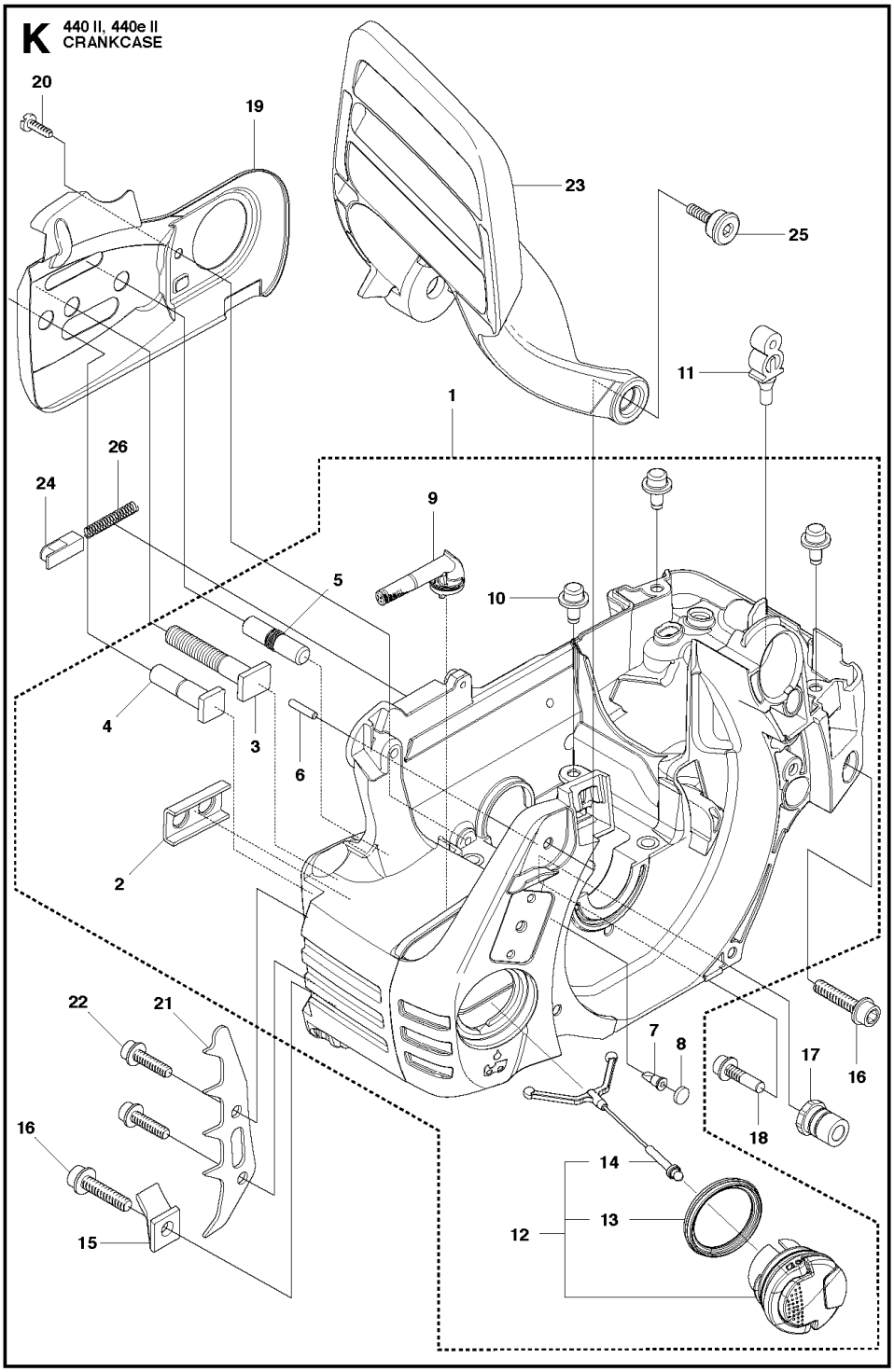

Ref.	Article N.	Description	Qty	Kit
1	501691701	COMBINATION WRENCH -	1	-
1	504724701	INSULATION WALL	1	-
2	504724501	INSULATION WALL	1	-
3	504724401	INSULATION WALL	1	-
4	504201202	INLET PIPE	1	-

Ref.	Article N.	Description	Qty	Kit
5	503200216	SCREW IHSCFM	4	-
6	547727401	CARBURETTOR *Zama Z014-120-0601-F*	1	-
7	544284401	THROTTLE ROD ASSY	1	-
8	544976402	FILTER HOLDER	1	-
9	544392601	SHACKLE	1	-
10	504712501	GUIDE	1	-
11	544844306	CONTROL	1	-
12	544976601	SCREW	1	-
13	503200240	SCREW IHSCFM	3	-
14	544805403	AIR FILTER *Non-Woven - Clear*	1	-
14	599729401	AIR FILTER ASSY *Nylon Mesh - 44 Micron Rating - Black*	1	-
15	503936601	PURGE	1	-
16	544401901	HOSE	1	-
1	547727401	CARBURETTOR *Zama Z014-120-0601-F*	1	-
2	503481101	PIECE	1	-
3	504024001	NOZZLE ASSY	1	-
4	503535601	PLUG WELCH	1	-
5	503479701	VALVE	1	-
6	537020301	SPRING	1	-
7	503665901	LEVER	1	-
8	503480001	PIN RETAINING SCREW	1	-
9	504024101	SCREW	1	-
10	505535201	HUB CAP	1	-
11	504026101	SHAFT ASSY	1	-
12	505110701	COLLAR	1	-
13	504028501	SPRING	1	-
14	504027501	VALVE	1	-
15	503481801	SCREW	2	-
16	504026701	CIRCLIP	2	-
17	504026201	SHAFT ASSY	1	-
18	540053701	LEVER	1	-
19	504028301	SPRING	1	-
20	504026301	LEVER	1	-
21	503479001	SCREW	2	-
22	504027401	VALVE	1	-

Ref.	Article N.	Description	Qty	Kit
23	503481801	SCREW	2	-
24	504026001	SHAFT ASSY	1	-
25	504028401	SPRING	1	-
26	544983101	LEVER	1	-
27	503479001	SCREW	2	-
28	504027601	VALVE	1	-
29	503479201	SCREW	1	-
30	504027301	SCREW	1	-
31	504909201	SCREW	1	-
32	504028101	SCREW	1	-
33	504024301	GASKET	1	-
34	504024501	DIAPHRAGM	1	-
35	504024601	BODY	1	-
36	504028201	SCREW	1	-
37	504025001	STRAINER	1	-
38	504025601	DIAPHRAGM	1	-
39	504025701	GASKET	1	-
40	504025901	COVER	1	-
41	504027801	SCREW	4	-
42	504028601	GASKET KIT	1	-
1	544194905	CLUTCH COVER ASSY *Orange*	1	-
1	544194915	CLUTCH COVER ASSY *Grey*	1	-
2	504542801	COVER LID	1	-
3	544306001	BRAKE BAND ASSY	1	-
4	544253101	WEAR PROTECTION	1	-
5	503855201	GUIDE BUSHING	1	-
6	505892601	BRAKE SPRING	1	-
7	544248501	COVER LID	1	-
8	503890802	KNEE JOINT ASSY	1	-
9	503892901	PIN	1	-
10	735310820	E-CLIP	1	-
11	537392901	SCREW	1	-
12	537347201	GEAR ASSY	1	-
13	537392601	HEAT PROTECTOR	1	-
14	544357501	LABEL	1	-
15	503217010	SCREW CCRPANT	10	-
16	525354301	BEARING SLEEVE	1	-

Ref.	Article N.	Description	Qty	Kit
17	505321001	WEAR PLATE	1	-
18	537347801	KNOB	1	-
1	575568001	CLUTCH ASSY	1	-
2	574718801	CLUTCH SPRING	2	-
3	505441501	CLUTCH DRUM ASSY	1	-
4	503539201	NEEDLE BEARING	1	-
5	536860001	WORM GEAR	1	-
6	540057901	PUMP PISTON	1	-
7	537154801	PUMP CYLINDER	1	-
8	544084202	OIL HOSE	1	-
1	544932507	CRANKCASE ASSY *Orange*	1	-
1	544932508	CRANKCASE ASSY *Grey*	1	-
2	503875802	STIFFENING PLATE	1	-
3	503875402	BAR BOLT	1	-
4	537334601	BAR BOLT	1	-
5	544036401	BAR BOLT	1	-
6	503240905	NEEDLE ROLLER	1	-
7	530026119	CHECK VALVE	1	-
8	537403501	FILTER	1	-
9	544083301	OIL SCREEN	1	-
10	544331601	GUIDE PIN	3	-
11	503869301	SUPPORT	1	-
12	522620003	TANK CAP ASSY	1	-
13	589241101	GASKET	1	-
14	503578901	HOLDER	1	-
15	503886301	PIN	1	-
16	503218876	SCREW IHSCT	2	-
17	501007601	SUPPORT	1	-
18	503215103	SCREW IHSCT	1	-
19	544284601	CHAIN GUIDE PLATE	1	-
20	503217010	SCREW CCRPANT	1	-
21	544286501	SPIKE	1	-
22	503217520	SCREW IHSCFT	2	-
23	544251501	HAND GUARD	1	-
24	503892401	LOCK	1	-
25	503893001	SCREW	2	-
26	503436501	POSITION SPRING	1	-

Ref.	Article N.	Description	Qty	Kit
1	525604601	CRANKSHAFT ASSY -	1	-
2	544248702	BALL BEARING -	1	-
3	544251201	SEALING -	1	-
4	544248802	BALL BEARING -	1	-
5	544251301	SEALING -	1	-
6	503414101	NEEDLE BEARING -	1	-
1	504790201	CYLINDER COVER ASSY	1	-
2	522736001	LABEL	1	-
3	595303001	SNAP LOCKING	3	-
1	504735101	CYLINDER -	1	-
2	502625007	PISTON ASSY -	1	-
3	544405901	PISTON RING -	1	-
4	544406001	PISTON PIN -	1	-
5	737441000	SNAP RING -	2	-
6	503414101	NEEDLE BEARING -	1	-
7	544396001	GASKET -	1	-
8	544395901	GASKET -	1	-
9	725533355	SCREW IHSCM -	4	-
10	503235111	SPARK PLUG -	1	-
11	504794001	GASKET -	1	-
1	544193805	FUEL TANK	1	-
2	503212810	SCREW CCRPANT	1	-
3	720182520	PARALLEL PIN	1	-
4	544968501	THROTTLE CONTROL	1	-
5	544099901	SPRING	1	-

Ref.	Article N.	Description	Qty	Kit
6	579239401	THROTTLE LOCKOUT	1	-
7	531246601	HANDLE INSERT *Grey soft*	1	-
8	544128604	FUEL HOSE	1	-
9	503443201	FUEL FILTER	1	-
10	577535101	RETURN HOSE	1	-
11	522620003	TANK CAP ASSY	1	-
12	589241101	GASKET	1	-
13	503578901	HOLDER	1	-
14	544375001	LABEL	1	-
15	501007601	SUPPORT	1	-
16	504795601	ANTIVIBRATION ELEMENT	2	-
17	721126339	GROOVED PIN	1	-
18	501152901	TANK VENT ASSY	1	-
1	544284001	FRONT HANDLE -	1	-
2	503218876	SCREW IHSCT -	3	-
3	503898301	ANTIVIBRATION ELEMENT -	1	-
1	580279801	FLYWHEEL ASSY -	1	-
2	537245601	STARTER PAWL -	2	-
3	501819903	SCREW -	2	-
4	503230042	WASHER -	2	-
5	529271101	SPRING -	2	-
6	503220401	NUT -	1	-
7	579638804	IGNITION MODULE -	1	-
8	510101401	WIRING ASSY -	1	-
9	503200220	SCREW IHSCFM -	2	-
1	544147702	MUFFLER ASSY -	1	-
2	579753301	SCREEN -	1	-

Ref.	Article N.	Description	Qty	Kit
3	501323101	HEAT DEFLECTOR -	1	-
4	579753101	GASKET -	1	-
5	725536855	SCREW IHSCM -	2	-
6	724128759	SCREW CRPANM -	1	-
7	504794001	GASKET -	1	-
1	504597002	STARTER ASSY -	1	-
2	504596902	STARTER -	1	-
3	537283201	SLEEVE -	1	-
4	540057502	SPRING CASSETTE ASSY -	1	-
5	503212810	SCREW CCRPANT -	2	-
6	504597101	STARTER PULLEY -	1	-
7	503217716	SCREW IHSCT -	1	-
8	505305125	STARTER ROPE -	1	-
9	537232501	STARTER HANDLE -	1	-
10	503217321	SCREW -	4	-
11	504546805	LABEL -	1	-
12	544197102	AIR CONDUCTOR -	1	-
1	505450401	WINTER KIT *Winter kit*	1	-
2	503217016	SCREW CCRPANT *Screw*	2	-
3	503405901	WINTER PLUG *Winter plug*	1	-
1	501388201	CLUTCH COVER ASSY -	0	-
2	735310820	E-CLIP	1	-

Ref.	Article N.	Description	Qty	Kit
		-		
3	537286601	PAWL -	1	-
4	540063301	CHAIN GUIDE -	1	-
5	537017401	BEARING SLEEVE -	1	-
6	503890802	KNEE JOINT ASSY -	1	-
7	505892601	BRAKE SPRING -	1	-
8	503855201	GUIDE BUSHING -	1	-
9	544248501	COVER LID -	1	-
10	503217010	SCREW CCRPANT -	7	-
11	544253101	WEAR PROTECTION -	1	-
12	544306001	BRAKE BAND ASSY -	1	-
13	503892901	PIN -	1	-
14	537397001	WORM SCREW -	1	-
15	537079402	WORM WHEEL -	1	-
16	740480702	O-RING -	1	-
17	503230063	WASHER -	1	-
18	544376801	LABEL -	1	-
19	503220001	HEXAGON NUT -	1	-

CRANKSHAFT

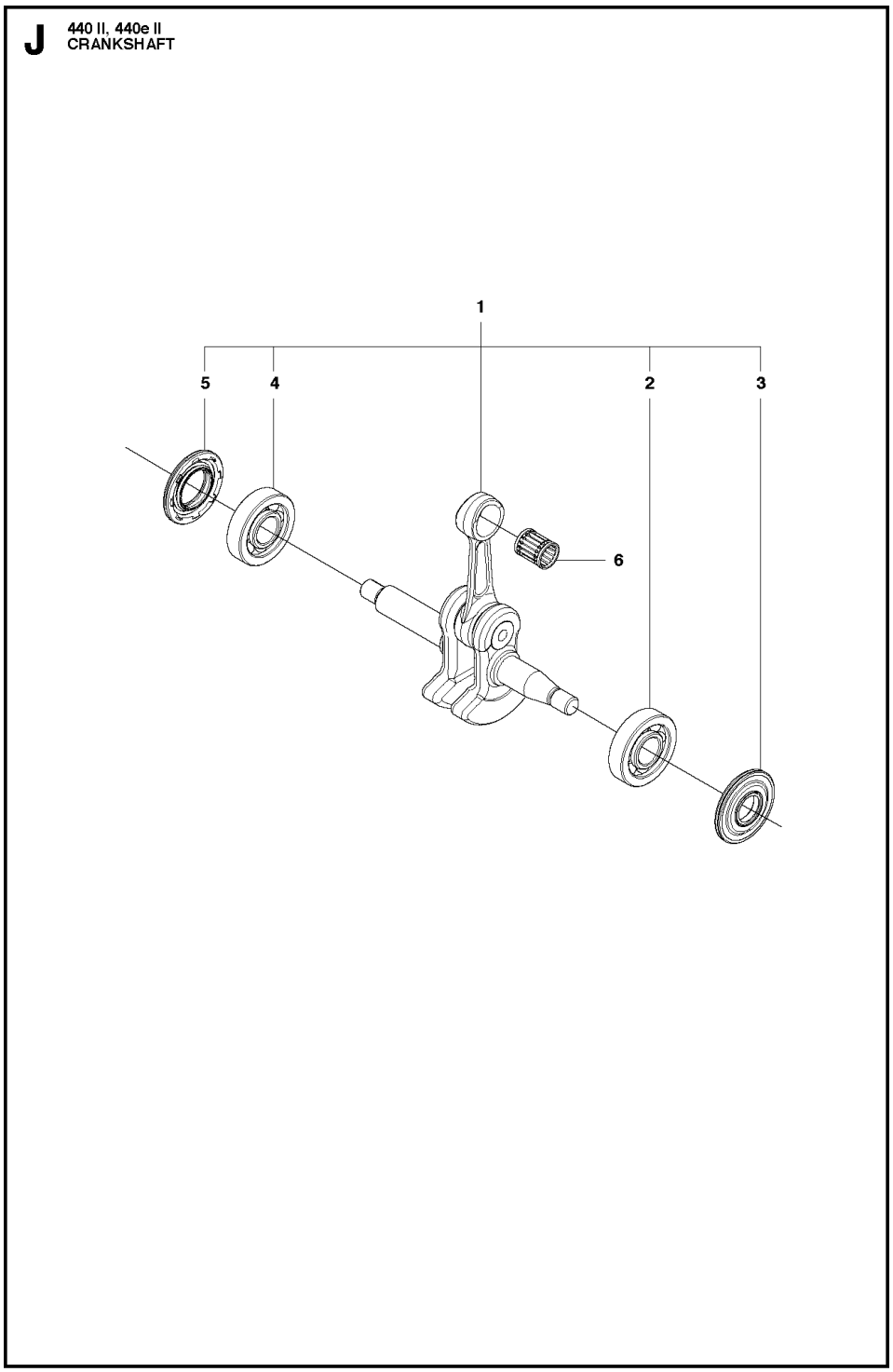

Ref.	Article N.	Description	Qty	Kit
1	501691701	COMBINATION WRENCH -	1	-
1	504724701	INSULATION WALL	1	-
2	504724501	INSULATION WALL	1	-
3	504724401	INSULATION WALL	1	-
4	504201202	INLET PIPE	1	-

Ref.	Article N.	Description	Qty	Kit
5	503200216	SCREW IHSCFM	4	-
6	547727401	CARBURETTOR *Zama Z014-120-0601-F*	1	-
7	544284401	THROTTLE ROD ASSY	1	-
8	544976402	FILTER HOLDER	1	-
9	544392601	SHACKLE	1	-
10	504712501	GUIDE	1	-
11	544844306	CONTROL	1	-
12	544976601	SCREW	1	-
13	503200240	SCREW IHSCFM	3	-
14	544805403	AIR FILTER *Non-Woven - Clear*	1	-
14	599729401	AIR FILTER ASSY *Nylon Mesh - 44 Micron Rating - Black*	1	-
15	503936601	PURGE	1	-
16	544401901	HOSE	1	-
1	547727401	CARBURETTOR *Zama Z014-120-0601-F*	1	-
2	503481101	PIECE	1	-
3	504024001	NOZZLE ASSY	1	-
4	503535601	PLUG WELCH	1	-
5	503479701	VALVE	1	-
6	537020301	SPRING	1	-
7	503665901	LEVER	1	-
8	503480001	PIN RETAINING SCREW	1	-
9	504024101	SCREW	1	-
10	505535201	HUB CAP	1	-
11	504026101	SHAFT ASSY	1	-
12	505110701	COLLAR	1	-
13	504028501	SPRING	1	-
14	504027501	VALVE	1	-
15	503481801	SCREW	2	-
16	504026701	CIRCLIP	2	-
17	504026201	SHAFT ASSY	1	-
18	540053701	LEVER	1	-
19	504028301	SPRING	1	-
20	504026301	LEVER	1	-
21	503479001	SCREW	2	-
22	504027401	VALVE	1	-

Ref.	Article N.	Description	Qty	Kit
23	503481801	SCREW	2	-
24	504026001	SHAFT ASSY	1	-
25	504028401	SPRING	1	-
26	544983101	LEVER	1	-
27	503479001	SCREW	2	-
28	504027601	VALVE	1	-
29	503479201	SCREW	1	-
30	504027301	SCREW	1	-
31	504909201	SCREW	1	-
32	504028101	SCREW	1	-
33	504024301	GASKET	1	-
34	504024501	DIAPHRAGM	1	-
35	504024601	BODY	1	-
36	504028201	SCREW	1	-
37	504025001	STRAINER	1	-
38	504025601	DIAPHRAGM	1	-
39	504025701	GASKET	1	-
40	504025901	COVER	1	-
41	504027801	SCREW	4	-
42	504028601	GASKET KIT	1	-
1	544194905	CLUTCH COVER ASSY *Orange*	1	-
1	544194915	CLUTCH COVER ASSY *Grey*	1	-
2	504542801	COVER LID	1	-
3	544306001	BRAKE BAND ASSY	1	-
4	544253101	WEAR PROTECTION	1	-
5	503855201	GUIDE BUSHING	1	-
6	505892601	BRAKE SPRING	1	-
7	544248501	COVER LID	1	-
8	503890802	KNEE JOINT ASSY	1	-
9	503892901	PIN	1	-
10	735310820	E-CLIP	1	-
11	537392901	SCREW	1	-
12	537347201	GEAR ASSY	1	-
13	537392601	HEAT PROTECTOR	1	-
14	544357501	LABEL	1	-
15	503217010	SCREW CCRPANT	10	-
16	525354301	BEARING SLEEVE	1	-

Ref.	Article N.	Description	Qty	Kit
17	505321001	WEAR PLATE	1	-
18	537347801	KNOB	1	-
1	575568001	CLUTCH ASSY	1	-
2	574718801	CLUTCH SPRING	2	-
3	505441501	CLUTCH DRUM ASSY	1	-
4	503539201	NEEDLE BEARING	1	-
5	536860001	WORM GEAR	1	-
6	540057901	PUMP PISTON	1	-
7	537154801	PUMP CYLINDER	1	-
8	544084202	OIL HOSE	1	-
1	544932507	CRANKCASE ASSY *Orange*	1	-
1	544932508	CRANKCASE ASSY *Grey*	1	-
2	503875802	STIFFENING PLATE	1	-
3	503875402	BAR BOLT	1	-
4	537334601	BAR BOLT	1	-
5	544036401	BAR BOLT	1	-
6	503240905	NEEDLE ROLLER	1	-
7	530026119	CHECK VALVE	1	-
8	537403501	FILTER	1	-
9	544083301	OIL SCREEN	1	-
10	544331601	GUIDE PIN	3	-
11	503869301	SUPPORT	1	-
12	522620003	TANK CAP ASSY	1	-
13	589241101	GASKET	1	-
14	503578901	HOLDER	1	-
15	503886301	PIN	1	-
16	503218876	SCREW IHSCT	2	-
17	501007601	SUPPORT	1	-
18	503215103	SCREW IHSCT	1	-
19	544284601	CHAIN GUIDE PLATE	1	-
20	503217010	SCREW CCRPANT	1	-
21	544286501	SPIKE	1	-
22	503217520	SCREW IHSCFT	2	-
23	544251501	HAND GUARD	1	-
24	503892401	LOCK	1	-
25	503893001	SCREW	2	-
26	503436501	POSITION SPRING	1	-

Ref.	Article N.	Description	Qty	Kit
1	525604601	CRANKSHAFT ASSY -	1	-
2	544248702	BALL BEARING -	1	-
3	544251201	SEALING -	1	-
4	544248802	BALL BEARING -	1	-
5	544251301	SEALING -	1	-
6	503414101	NEEDLE BEARING -	1	-
1	504790201	CYLINDER COVER ASSY	1	-
2	522736001	LABEL	1	-
3	595303001	SNAP LOCKING	3	-
1	504735101	CYLINDER -	1	-
2	502625007	PISTON ASSY -	1	-
3	544405901	PISTON RING -	1	-
4	544406001	PISTON PIN -	1	-
5	737441000	SNAP RING -	2	-
6	503414101	NEEDLE BEARING -	1	-
7	544396001	GASKET -	1	-
8	544395901	GASKET -	1	-
9	725533355	SCREW IHSCM -	4	-
10	503235111	SPARK PLUG -	1	-
11	504794001	GASKET -	1	-
1	544193805	FUEL TANK	1	-
2	503212810	SCREW CCRPANT	1	-
3	720182520	PARALLEL PIN	1	-
4	544968501	THROTTLE CONTROL	1	-
5	544099901	SPRING	1	-

Ref.	Article N.	Description	Qty	Kit
6	579239401	THROTTLE LOCKOUT	1	-
7	531246601	HANDLE INSERT *Grey soft*	1	-
8	544128604	FUEL HOSE	1	-
9	503443201	FUEL FILTER	1	-
10	577535101	RETURN HOSE	1	-
11	522620003	TANK CAP ASSY	1	-
12	589241101	GASKET	1	-
13	503578901	HOLDER	1	-
14	544375001	LABEL	1	-
15	501007601	SUPPORT	1	-
16	504795601	ANTIVIBRATION ELEMENT	2	-
17	721126339	GROOVED PIN	1	-
18	501152901	TANK VENT ASSY	1	-
1	544284001	FRONT HANDLE -	1	-
2	503218876	SCREW IHSCT -	3	-
3	503898301	ANTIVIBRATION ELEMENT -	1	-
1	580279801	FLYWHEEL ASSY -	1	-
2	537245601	STARTER PAWL -	2	-
3	501819903	SCREW -	2	-
4	503230042	WASHER -	2	-
5	529271101	SPRING -	2	-
6	503220401	NUT -	1	-
7	579638804	IGNITION MODULE -	1	-
8	510101401	WIRING ASSY -	1	-
9	503200220	SCREW IHSCFM -	2	-
1	544147702	MUFFLER ASSY -	1	-
2	579753301	SCREEN -	1	-

Ref.	Article N.	Description	Qty	Kit
3	501323101	HEAT DEFLECTOR -	1	-
4	579753101	GASKET -	1	-
5	725536855	SCREW IHSCM -	2	-
6	724128759	SCREW CRPANM -	1	-
7	504794001	GASKET -	1	-
1	504597002	STARTER ASSY -	1	-
2	504596902	STARTER -	1	-
3	537283201	SLEEVE -	1	-
4	540057502	SPRING CASSETTE ASSY -	1	-
5	503212810	SCREW CCRPANT -	2	-
6	504597101	STARTER PULLEY -	1	-
7	503217716	SCREW IHSCT -	1	-
8	505305125	STARTER ROPE -	1	-
9	537232501	STARTER HANDLE -	1	-
10	503217321	SCREW -	4	-
11	504546805	LABEL -	1	-
12	544197102	AIR CONDUCTOR -	1	-
1	505450401	WINTER KIT *Winter kit*	1	-
2	503217016	SCREW CCRPANT *Screw*	2	-
3	503405901	WINTER PLUG *Winter plug*	1	-
1	501388201	CLUTCH COVER ASSY -	0	-
2	735310820	E-CLIP	1	-

Ref.	Article N.	Description	Qty	Kit
		-		
3	537286601	PAWL -	1	-
4	540063301	CHAIN GUIDE -	1	-
5	537017401	BEARING SLEEVE -	1	-
6	503890802	KNEE JOINT ASSY -	1	-
7	505892601	BRAKE SPRING -	1	-
8	503855201	GUIDE BUSHING -	1	-
9	544248501	COVER LID -	1	-
10	503217010	SCREW CCRPANT -	7	-
11	544253101	WEAR PROTECTION -	1	-
12	544306001	BRAKE BAND ASSY -	1	-
13	503892901	PIN -	1	-
14	537397001	WORM SCREW -	1	-
15	537079402	WORM WHEEL -	1	-
16	740480702	O-RING -	1	-
17	503230063	WASHER -	1	-
18	544376801	LABEL -	1	-
19	503220001	HEXAGON NUT -	1	-

CYLINDER COVER

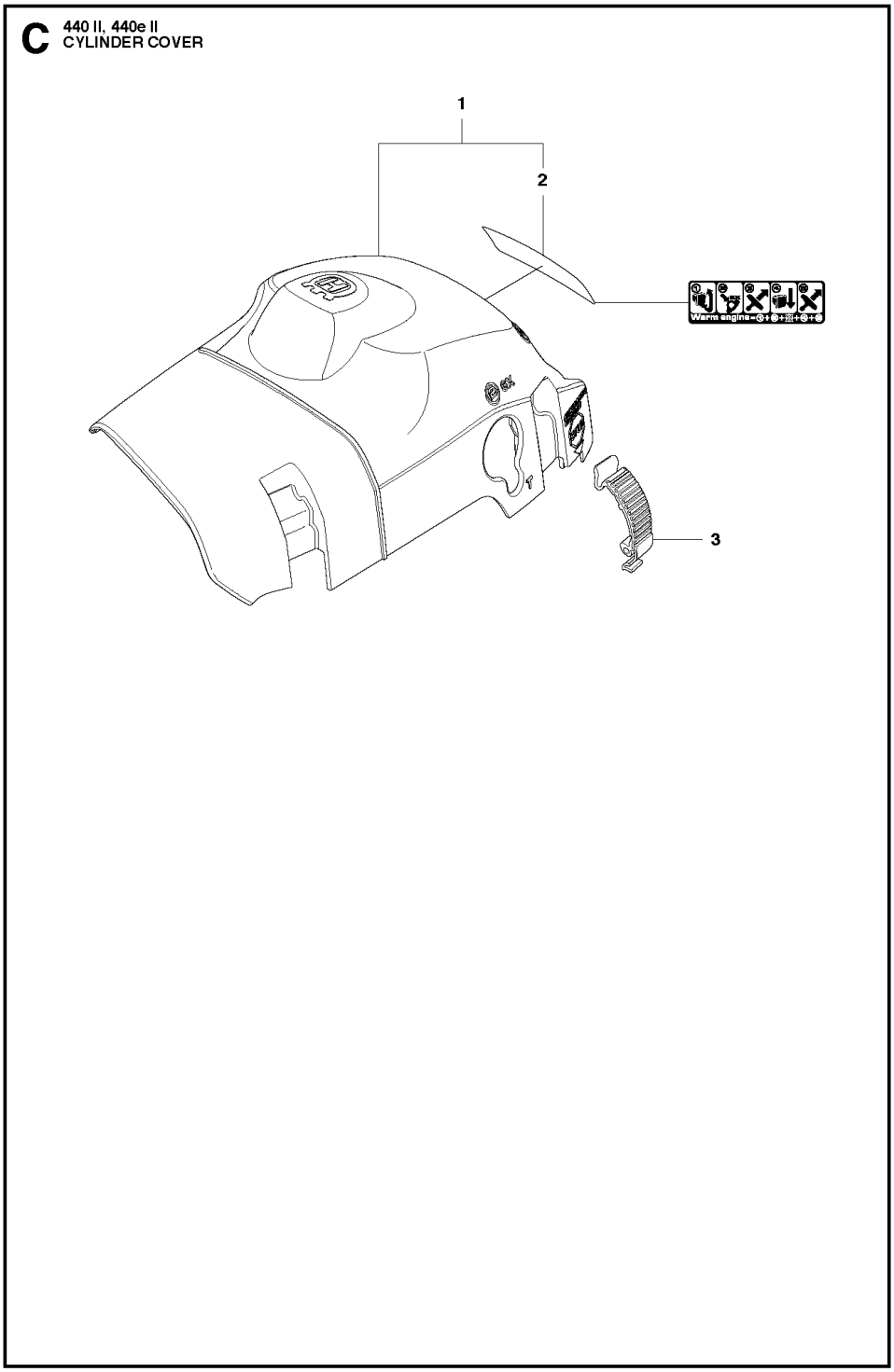

Ref.	Article N.	Description	Qty	Kit
1	501691701	COMBINATION WRENCH -	1	-
1	504724701	INSULATION WALL	1	-
2	504724501	INSULATION WALL	1	-
3	504724401	INSULATION WALL	1	-
4	504201202	INLET PIPE	1	-

Ref.	Article N.	Description	Qty	Kit
5	503200216	SCREW IHSCFM	4	-
6	547727401	CARBURETTOR *Zama Z014-120-0601-F*	1	-
7	544284401	THROTTLE ROD ASSY	1	-
8	544976402	FILTER HOLDER	1	-
9	544392601	SHACKLE	1	-
10	504712501	GUIDE	1	-
11	544844306	CONTROL	1	-
12	544976601	SCREW	1	-
13	503200240	SCREW IHSCFM	3	-
14	544805403	AIR FILTER *Non-Woven - Clear*	1	-
14	599729401	AIR FILTER ASSY *Nylon Mesh - 44 Micron Rating - Black*	1	-
15	503936601	PURGE	1	-
16	544401901	HOSE	1	-
1	547727401	CARBURETTOR *Zama Z014-120-0601-F*	1	-
2	503481101	PIECE	1	-
3	504024001	NOZZLE ASSY	1	-
4	503535601	PLUG WELCH	1	-
5	503479701	VALVE	1	-
6	537020301	SPRING	1	-
7	503665901	LEVER	1	-
8	503480001	PIN RETAINING SCREW	1	-
9	504024101	SCREW	1	-
10	505535201	HUB CAP	1	-
11	504026101	SHAFT ASSY	1	-
12	505110701	COLLAR	1	-
13	504028501	SPRING	1	-
14	504027501	VALVE	1	-
15	503481801	SCREW	2	-
16	504026701	CIRCLIP	2	-
17	504026201	SHAFT ASSY	1	-
18	540053701	LEVER	1	-
19	504028301	SPRING	1	-
20	504026301	LEVER	1	-
21	503479001	SCREW	2	-
22	504027401	VALVE	1	-

Ref.	Article N.	Description	Qty	Kit
23	503481801	SCREW	2	-
24	504026001	SHAFT ASSY	1	-
25	504028401	SPRING	1	-
26	544983101	LEVER	1	-
27	503479001	SCREW	2	-
28	504027601	VALVE	1	-
29	503479201	SCREW	1	-
30	504027301	SCREW	1	-
31	504909201	SCREW	1	-
32	504028101	SCREW	1	-
33	504024301	GASKET	1	-
34	504024501	DIAPHRAGM	1	-
35	504024601	BODY	1	-
36	504028201	SCREW	1	-
37	504025001	STRAINER	1	-
38	504025601	DIAPHRAGM	1	-
39	504025701	GASKET	1	-
40	504025901	COVER	1	-
41	504027801	SCREW	4	-
42	504028601	GASKET KIT	1	-
1	544194905	CLUTCH COVER ASSY *Orange*	1	-
1	544194915	CLUTCH COVER ASSY *Grey*	1	-
2	504542801	COVER LID	1	-
3	544306001	BRAKE BAND ASSY	1	-
4	544253101	WEAR PROTECTION	1	-
5	503855201	GUIDE BUSHING	1	-
6	505892601	BRAKE SPRING	1	-
7	544248501	COVER LID	1	-
8	503890802	KNEE JOINT ASSY	1	-
9	503892901	PIN	1	-
10	735310820	E-CLIP	1	-
11	537392901	SCREW	1	-
12	537347201	GEAR ASSY	1	-
13	537392601	HEAT PROTECTOR	1	-
14	544357501	LABEL	1	-
15	503217010	SCREW CCRPANT	10	-
16	525354301	BEARING SLEEVE	1	-

Ref.	Article N.	Description	Qty	Kit
17	505321001	WEAR PLATE	1	-
18	537347801	KNOB	1	-
1	575568001	CLUTCH ASSY	1	-
2	574718801	CLUTCH SPRING	2	-
3	505441501	CLUTCH DRUM ASSY	1	-
4	503539201	NEEDLE BEARING	1	-
5	536860001	WORM GEAR	1	-
6	540057901	PUMP PISTON	1	-
7	537154801	PUMP CYLINDER	1	-
8	544084202	OIL HOSE	1	-
1	544932507	CRANKCASE ASSY *Orange*	1	-
1	544932508	CRANKCASE ASSY *Grey*	1	-
2	503875802	STIFFENING PLATE	1	-
3	503875402	BAR BOLT	1	-
4	537334601	BAR BOLT	1	-
5	544036401	BAR BOLT	1	-
6	503240905	NEEDLE ROLLER	1	-
7	530026119	CHECK VALVE	1	-
8	537403501	FILTER	1	-
9	544083301	OIL SCREEN	1	-
10	544331601	GUIDE PIN	3	-
11	503869301	SUPPORT	1	-
12	522620003	TANK CAP ASSY	1	-
13	589241101	GASKET	1	-
14	503578901	HOLDER	1	-
15	503886301	PIN	1	-
16	503218876	SCREW IHSCT	2	-
17	501007601	SUPPORT	1	-
18	503215103	SCREW IHSCT	1	-
19	544284601	CHAIN GUIDE PLATE	1	-
20	503217010	SCREW CCRPANT	1	-
21	544286501	SPIKE	1	-
22	503217520	SCREW IHSCFT	2	-
23	544251501	HAND GUARD	1	-
24	503892401	LOCK	1	-
25	503893001	SCREW	2	-
26	503436501	POSITION SPRING	1	-

Ref.	Article N.	Description	Qty	Kit
1	525604601	CRANKSHAFT ASSY -	1	-
2	544248702	BALL BEARING -	1	-
3	544251201	SEALING -	1	-
4	544248802	BALL BEARING -	1	-
5	544251301	SEALING -	1	-
6	503414101	NEEDLE BEARING -	1	-
1	504790201	CYLINDER COVER ASSY	1	-
2	522736001	LABEL	1	-
3	595303001	SNAP LOCKING	3	-
1	504735101	CYLINDER -	1	-
2	502625007	PISTON ASSY -	1	-
3	544405901	PISTON RING -	1	-
4	544406001	PISTON PIN -	1	-
5	737441000	SNAP RING -	2	-
6	503414101	NEEDLE BEARING -	1	-
7	544396001	GASKET -	1	-
8	544395901	GASKET -	1	-
9	725533355	SCREW IHSCM -	4	-
10	503235111	SPARK PLUG -	1	-
11	504794001	GASKET -	1	-
1	544193805	FUEL TANK	1	-
2	503212810	SCREW CCRPANT	1	-
3	720182520	PARALLEL PIN	1	-
4	544968501	THROTTLE CONTROL	1	-
5	544099901	SPRING	1	-

Ref.	Article N.	Description	Qty	Kit
6	579239401	THROTTLE LOCKOUT	1	-
7	531246601	HANDLE INSERT *Grey soft*	1	-
8	544128604	FUEL HOSE	1	-
9	503443201	FUEL FILTER	1	-
10	577535101	RETURN HOSE	1	-
11	522620003	TANK CAP ASSY	1	-
12	589241101	GASKET	1	-
13	503578901	HOLDER	1	-
14	544375001	LABEL	1	-
15	501007601	SUPPORT	1	-
16	504795601	ANTIVIBRATION ELEMENT	2	-
17	721126339	GROOVED PIN	1	-
18	501152901	TANK VENT ASSY	1	-
1	544284001	FRONT HANDLE -	1	-
2	503218876	SCREW IHSCT -	3	-
3	503898301	ANTIVIBRATION ELEMENT -	1	-
1	580279801	FLYWHEEL ASSY -	1	-
2	537245601	STARTER PAWL -	2	-
3	501819903	SCREW -	2	-
4	503230042	WASHER -	2	-
5	529271101	SPRING -	2	-
6	503220401	NUT -	1	-
7	579638804	IGNITION MODULE -	1	-
8	510101401	WIRING ASSY -	1	-
9	503200220	SCREW IHSCFM -	2	-
1	544147702	MUFFLER ASSY -	1	-
2	579753301	SCREEN -	1	-

Ref.	Article N.	Description	Qty	Kit
3	501323101	HEAT DEFLECTOR -	1	-
4	579753101	GASKET -	1	-
5	725536855	SCREW IHSCM -	2	-
6	724128759	SCREW CRPANM -	1	-
7	504794001	GASKET -	1	-
1	504597002	STARTER ASSY -	1	-
2	504596902	STARTER -	1	-
3	537283201	SLEEVE -	1	-
4	540057502	SPRING CASSETTE ASSY -	1	-
5	503212810	SCREW CCRPANT -	2	-
6	504597101	STARTER PULLEY -	1	-
7	503217716	SCREW IHSCT -	1	-
8	505305125	STARTER ROPE -	1	-
9	537232501	STARTER HANDLE -	1	-
10	503217321	SCREW -	4	-
11	504546805	LABEL -	1	-
12	544197102	AIR CONDUCTOR -	1	-
1	505450401	WINTER KIT *Winter kit*	1	-
2	503217016	SCREW CCRPANT *Screw*	2	-
3	503405901	WINTER PLUG *Winter plug*	1	-
1	501388201	CLUTCH COVER ASSY -	0	-
2	735310820	E-CLIP	1	-

Ref.	Article N.	Description	Qty	Kit
		-		
3	537286601	PAWL -	1	-
4	540063301	CHAIN GUIDE -	1	-
5	537017401	BEARING SLEEVE -	1	-
6	503890802	KNEE JOINT ASSY -	1	-
7	505892601	BRAKE SPRING -	1	-
8	503855201	GUIDE BUSHING -	1	-
9	544248501	COVER LID -	1	-
10	503217010	SCREW CCRPANT -	7	-
11	544253101	WEAR PROTECTION -	1	-
12	544306001	BRAKE BAND ASSY -	1	-
13	503892901	PIN -	1	-
14	537397001	WORM SCREW -	1	-
15	537079402	WORM WHEEL -	1	-
16	740480702	O-RING -	1	-
17	503230063	WASHER -	1	-
18	544376801	LABEL -	1	-
19	503220001	HEXAGON NUT -	1	-

CYLINDER PISTON

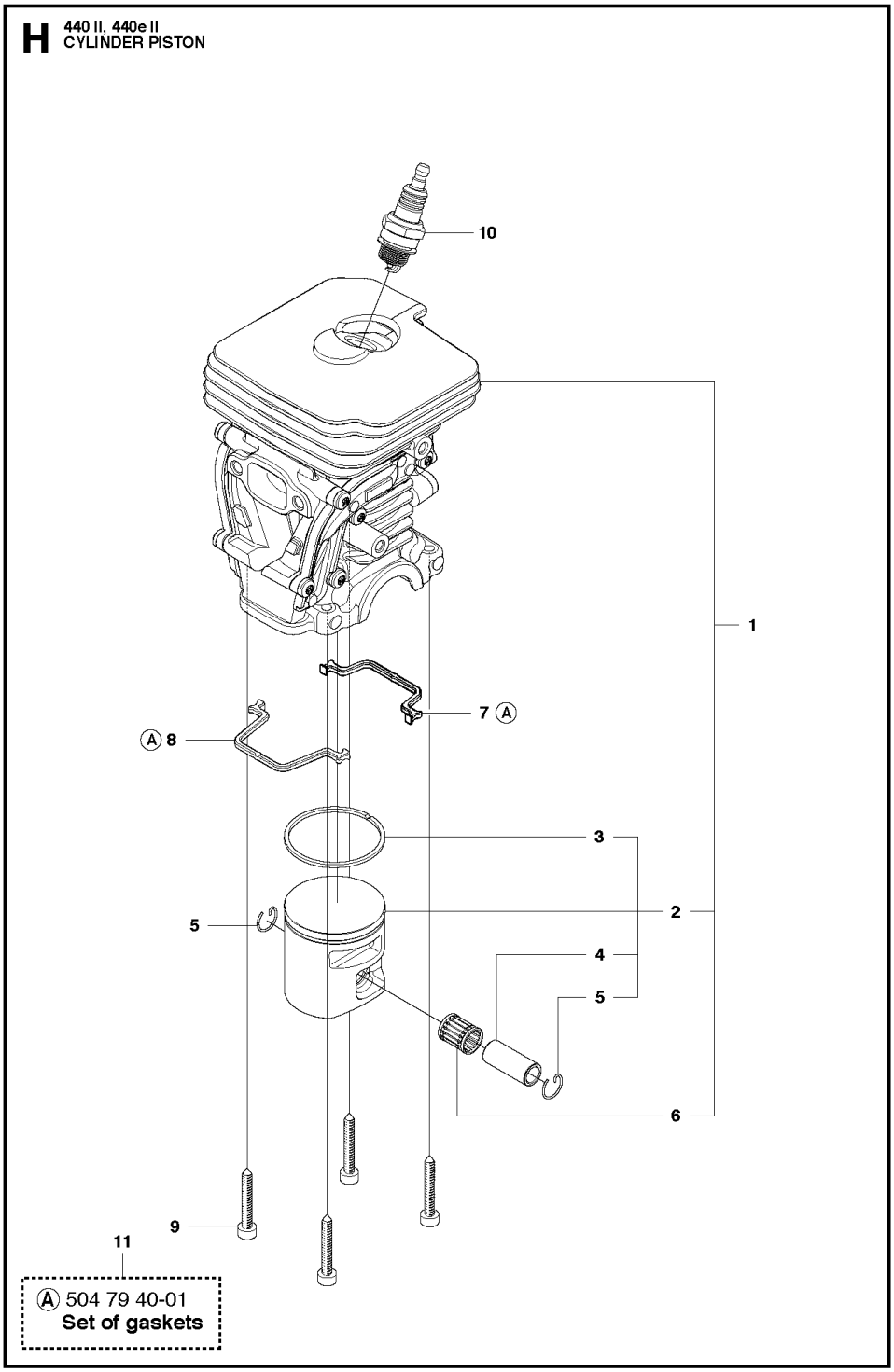

Ref.	Article N.	Description	Qty	Kit
1	501691701	COMBINATION WRENCH -	1	-
1	504724701	INSULATION WALL	1	-
2	504724501	INSULATION WALL	1	-
3	504724401	INSULATION WALL	1	-
4	504201202	INLET PIPE	1	-

Ref.	Article N.	Description	Qty	Kit
5	503200216	SCREW IHSCFM	4	-
6	547727401	CARBURETTOR *Zama Z014-120-0601-F*	1	-
7	544284401	THROTTLE ROD ASSY	1	-
8	544976402	FILTER HOLDER	1	-
9	544392601	SHACKLE	1	-
10	504712501	GUIDE	1	-
11	544844306	CONTROL	1	-
12	544976601	SCREW	1	-
13	503200240	SCREW IHSCFM	3	-
14	544805403	AIR FILTER *Non-Woven - Clear*	1	-
14	599729401	AIR FILTER ASSY *Nylon Mesh - 44 Micron Rating - Black*	1	-
15	503936601	PURGE	1	-
16	544401901	HOSE	1	-
1	547727401	CARBURETTOR *Zama Z014-120-0601-F*	1	-
2	503481101	PIECE	1	-
3	504024001	NOZZLE ASSY	1	-
4	503535601	PLUG WELCH	1	-
5	503479701	VALVE	1	-
6	537020301	SPRING	1	-
7	503665901	LEVER	1	-
8	503480001	PIN RETAINING SCREW	1	-
9	504024101	SCREW	1	-
10	505535201	HUB CAP	1	-
11	504026101	SHAFT ASSY	1	-
12	505110701	COLLAR	1	-
13	504028501	SPRING	1	-
14	504027501	VALVE	1	-
15	503481801	SCREW	2	-
16	504026701	CIRCLIP	2	-
17	504026201	SHAFT ASSY	1	-
18	540053701	LEVER	1	-
19	504028301	SPRING	1	-
20	504026301	LEVER	1	-
21	503479001	SCREW	2	-
22	504027401	VALVE	1	-

Ref.	Article N.	Description	Qty	Kit
23	503481801	SCREW	2	-
24	504026001	SHAFT ASSY	1	-
25	504028401	SPRING	1	-
26	544983101	LEVER	1	-
27	503479001	SCREW	2	-
28	504027601	VALVE	1	-
29	503479201	SCREW	1	-
30	504027301	SCREW	1	-
31	504909201	SCREW	1	-
32	504028101	SCREW	1	-
33	504024301	GASKET	1	-
34	504024501	DIAPHRAGM	1	-
35	504024601	BODY	1	-
36	504028201	SCREW	1	-
37	504025001	STRAINER	1	-
38	504025601	DIAPHRAGM	1	-
39	504025701	GASKET	1	-
40	504025901	COVER	1	-
41	504027801	SCREW	4	-
42	504028601	GASKET KIT	1	-
1	544194905	CLUTCH COVER ASSY *Orange*	1	-
1	544194915	CLUTCH COVER ASSY *Grey*	1	-
2	504542801	COVER LID	1	-
3	544306001	BRAKE BAND ASSY	1	-
4	544253101	WEAR PROTECTION	1	-
5	503855201	GUIDE BUSHING	1	-
6	505892601	BRAKE SPRING	1	-
7	544248501	COVER LID	1	-
8	503890802	KNEE JOINT ASSY	1	-
9	503892901	PIN	1	-
10	735310820	E-CLIP	1	-
11	537392901	SCREW	1	-
12	537347201	GEAR ASSY	1	-
13	537392601	HEAT PROTECTOR	1	-
14	544357501	LABEL	1	-
15	503217010	SCREW CCRPANT	10	-
16	525354301	BEARING SLEEVE	1	-

Ref.	Article N.	Description	Qty	Kit
17	505321001	WEAR PLATE	1	-
18	537347801	KNOB	1	-
1	575568001	CLUTCH ASSY	1	-
2	574718801	CLUTCH SPRING	2	-
3	505441501	CLUTCH DRUM ASSY	1	-
4	503539201	NEEDLE BEARING	1	-
5	536860001	WORM GEAR	1	-
6	540057901	PUMP PISTON	1	-
7	537154801	PUMP CYLINDER	1	-
8	544084202	OIL HOSE	1	-
1	544932507	CRANKCASE ASSY *Orange*	1	-
1	544932508	CRANKCASE ASSY *Grey*	1	-
2	503875802	STIFFENING PLATE	1	-
3	503875402	BAR BOLT	1	-
4	537334601	BAR BOLT	1	-
5	544036401	BAR BOLT	1	-
6	503240905	NEEDLE ROLLER	1	-
7	530026119	CHECK VALVE	1	-
8	537403501	FILTER	1	-
9	544083301	OIL SCREEN	1	-
10	544331601	GUIDE PIN	3	-
11	503869301	SUPPORT	1	-
12	522620003	TANK CAP ASSY	1	-
13	589241101	GASKET	1	-
14	503578901	HOLDER	1	-
15	503886301	PIN	1	-
16	503218876	SCREW IHSCT	2	-
17	501007601	SUPPORT	1	-
18	503215103	SCREW IHSCT	1	-
19	544284601	CHAIN GUIDE PLATE	1	-
20	503217010	SCREW CCRPANT	1	-
21	544286501	SPIKE	1	-
22	503217520	SCREW IHSCFT	2	-
23	544251501	HAND GUARD	1	-
24	503892401	LOCK	1	-
25	503893001	SCREW	2	-
26	503436501	POSITION SPRING	1	-

Ref.	Article N.	Description	Qty	Kit
1	525604601	CRANKSHAFT ASSY -	1	-
2	544248702	BALL BEARING -	1	-
3	544251201	SEALING -	1	-
4	544248802	BALL BEARING -	1	-
5	544251301	SEALING -	1	-
6	503414101	NEEDLE BEARING -	1	-
1	504790201	CYLINDER COVER ASSY	1	-
2	522736001	LABEL	1	-
3	595303001	SNAP LOCKING	3	-
1	504735101	CYLINDER -	1	-
2	502625007	PISTON ASSY -	1	-
3	544405901	PISTON RING -	1	-
4	544406001	PISTON PIN -	1	-
5	737441000	SNAP RING -	2	-
6	503414101	NEEDLE BEARING -	1	-
7	544396001	GASKET -	1	-
8	544395901	GASKET -	1	-
9	725533355	SCREW IHSCM -	4	-
10	503235111	SPARK PLUG -	1	-
11	504794001	GASKET -	1	-
1	544193805	FUEL TANK	1	-
2	503212810	SCREW CCRPANT	1	-
3	720182520	PARALLEL PIN	1	-
4	544968501	THROTTLE CONTROL	1	-
5	544099901	SPRING	1	-

Ref.	Article N.	Description	Qty	Kit
6	579239401	THROTTLE LOCKOUT	1	-
7	531246601	HANDLE INSERT *Grey soft*	1	-
8	544128604	FUEL HOSE	1	-
9	503443201	FUEL FILTER	1	-
10	577535101	RETURN HOSE	1	-
11	522620003	TANK CAP ASSY	1	-
12	589241101	GASKET	1	-
13	503578901	HOLDER	1	-
14	544375001	LABEL	1	-
15	501007601	SUPPORT	1	-
16	504795601	ANTIVIBRATION ELEMENT	2	-
17	721126339	GROOVED PIN	1	-
18	501152901	TANK VENT ASSY	1	-
1	544284001	FRONT HANDLE -	1	-
2	503218876	SCREW IHSCT -	3	-
3	503898301	ANTIVIBRATION ELEMENT -	1	-
1	580279801	FLYWHEEL ASSY -	1	-
2	537245601	STARTER PAWL -	2	-
3	501819903	SCREW -	2	-
4	503230042	WASHER -	2	-
5	529271101	SPRING -	2	-
6	503220401	NUT -	1	-
7	579638804	IGNITION MODULE -	1	-
8	510101401	WIRING ASSY -	1	-
9	503200220	SCREW IHSCFM -	2	-
1	544147702	MUFFLER ASSY -	1	-
2	579753301	SCREEN -	1	-

Ref.	Article N.	Description	Qty	Kit
3	501323101	HEAT DEFLECTOR -	1	-
4	579753101	GASKET -	1	-
5	725536855	SCREW IHSCM -	2	-
6	724128759	SCREW CRPANM -	1	-
7	504794001	GASKET -	1	-
1	504597002	STARTER ASSY -	1	-
2	504596902	STARTER -	1	-
3	537283201	SLEEVE -	1	-
4	540057502	SPRING CASSETTE ASSY -	1	-
5	503212810	SCREW CCRPANT -	2	-
6	504597101	STARTER PULLEY -	1	-
7	503217716	SCREW IHSCT -	1	-
8	505305125	STARTER ROPE -	1	-
9	537232501	STARTER HANDLE -	1	-
10	503217321	SCREW -	4	-
11	504546805	LABEL -	1	-
12	544197102	AIR CONDUCTOR -	1	-
1	505450401	WINTER KIT *Winter kit*	1	-
2	503217016	SCREW CCRPANT *Screw*	2	-
3	503405901	WINTER PLUG *Winter plug*	1	-
1	501388201	CLUTCH COVER ASSY -	0	-
2	735310820	E-CLIP	1	-

Ref.	Article N.	Description	Qty	Kit
		-		
3	537286601	PAWL -	1	-
4	540063301	CHAIN GUIDE -	1	-
5	537017401	BEARING SLEEVE -	1	-
6	503890802	KNEE JOINT ASSY -	1	-
7	505892601	BRAKE SPRING -	1	-
8	503855201	GUIDE BUSHING -	1	-
9	544248501	COVER LID -	1	-
10	503217010	SCREW CCRPANT -	7	-
11	544253101	WEAR PROTECTION -	1	-
12	544306001	BRAKE BAND ASSY -	1	-
13	503892901	PIN -	1	-
14	537397001	WORM SCREW -	1	-
15	537079402	WORM WHEEL -	1	-
16	740480702	O-RING -	1	-
17	503230063	WASHER -	1	-
18	544376801	LABEL -	1	-
19	503220001	HEXAGON NUT -	1	-

FUEL TANK

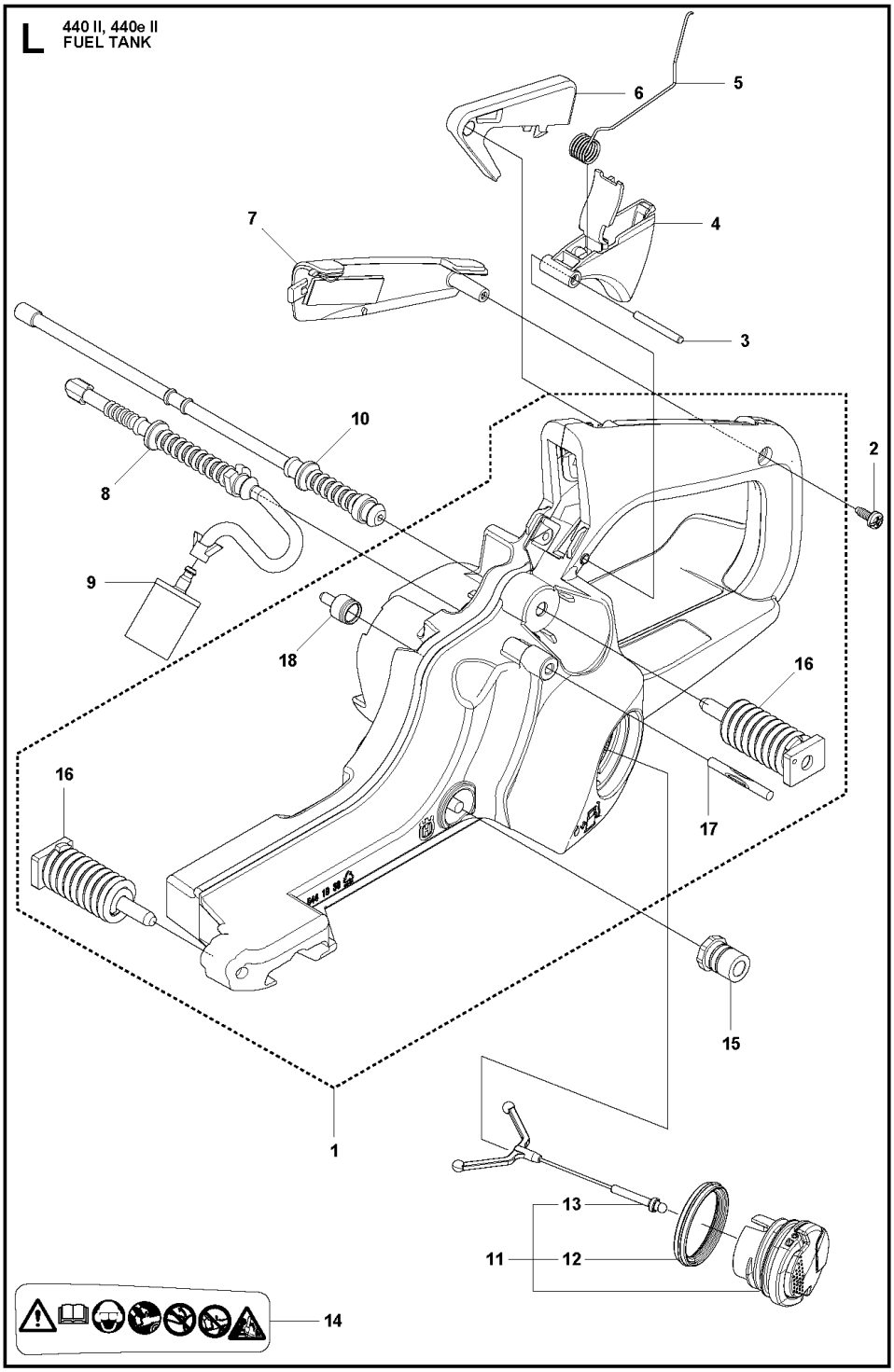

Ref.	Article N.	Description	Qty	Kit
1	501691701	COMBINATION WRENCH -	1	-
1	504724701	INSULATION WALL	1	-
2	504724501	INSULATION WALL	1	-
3	504724401	INSULATION WALL	1	-
4	504201202	INLET PIPE	1	-

Ref.	Article N.	Description	Qty	Kit
5	503200216	SCREW IHSCFM	4	-
6	547727401	CARBURETTOR *Zama Z014-120-0601-F*	1	-
7	544284401	THROTTLE ROD ASSY	1	-
8	544976402	FILTER HOLDER	1	-
9	544392601	SHACKLE	1	-
10	504712501	GUIDE	1	-
11	544844306	CONTROL	1	-
12	544976601	SCREW	1	-
13	503200240	SCREW IHSCFM	3	-
14	544805403	AIR FILTER *Non-Woven - Clear*	1	-
14	599729401	AIR FILTER ASSY *Nylon Mesh - 44 Micron Rating - Black*	1	-
15	503936601	PURGE	1	-
16	544401901	HOSE	1	-
1	547727401	CARBURETTOR *Zama Z014-120-0601-F*	1	-
2	503481101	PIECE	1	-
3	504024001	NOZZLE ASSY	1	-
4	503535601	PLUG WELCH	1	-
5	503479701	VALVE	1	-
6	537020301	SPRING	1	-
7	503665901	LEVER	1	-
8	503480001	PIN RETAINING SCREW	1	-
9	504024101	SCREW	1	-
10	505535201	HUB CAP	1	-
11	504026101	SHAFT ASSY	1	-
12	505110701	COLLAR	1	-
13	504028501	SPRING	1	-
14	504027501	VALVE	1	-
15	503481801	SCREW	2	-
16	504026701	CIRCLIP	2	-
17	504026201	SHAFT ASSY	1	-
18	540053701	LEVER	1	-
19	504028301	SPRING	1	-
20	504026301	LEVER	1	-
21	503479001	SCREW	2	-
22	504027401	VALVE	1	-

Ref.	Article N.	Description	Qty	Kit
23	503481801	SCREW	2	-
24	504026001	SHAFT ASSY	1	-
25	504028401	SPRING	1	-
26	544983101	LEVER	1	-
27	503479001	SCREW	2	-
28	504027601	VALVE	1	-
29	503479201	SCREW	1	-
30	504027301	SCREW	1	-
31	504909201	SCREW	1	-
32	504028101	SCREW	1	-
33	504024301	GASKET	1	-
34	504024501	DIAPHRAGM	1	-
35	504024601	BODY	1	-
36	504028201	SCREW	1	-
37	504025001	STRAINER	1	-
38	504025601	DIAPHRAGM	1	-
39	504025701	GASKET	1	-
40	504025901	COVER	1	-
41	504027801	SCREW	4	-
42	504028601	GASKET KIT	1	-
1	544194905	CLUTCH COVER ASSY *Orange*	1	-
1	544194915	CLUTCH COVER ASSY *Grey*	1	-
2	504542801	COVER LID	1	-
3	544306001	BRAKE BAND ASSY	1	-
4	544253101	WEAR PROTECTION	1	-
5	503855201	GUIDE BUSHING	1	-
6	505892601	BRAKE SPRING	1	-
7	544248501	COVER LID	1	-
8	503890802	KNEE JOINT ASSY	1	-
9	503892901	PIN	1	-
10	735310820	E-CLIP	1	-
11	537392901	SCREW	1	-
12	537347201	GEAR ASSY	1	-
13	537392601	HEAT PROTECTOR	1	-
14	544357501	LABEL	1	-
15	503217010	SCREW CCRPANT	10	-
16	525354301	BEARING SLEEVE	1	-

Ref.	Article N.	Description	Qty	Kit
17	505321001	WEAR PLATE	1	-
18	537347801	KNOB	1	-
1	575568001	CLUTCH ASSY	1	-
2	574718801	CLUTCH SPRING	2	-
3	505441501	CLUTCH DRUM ASSY	1	-
4	503539201	NEEDLE BEARING	1	-
5	536860001	WORM GEAR	1	-
6	540057901	PUMP PISTON	1	-
7	537154801	PUMP CYLINDER	1	-
8	544084202	OIL HOSE	1	-
1	544932507	CRANKCASE ASSY *Orange*	1	-
1	544932508	CRANKCASE ASSY *Grey*	1	-
2	503875802	STIFFENING PLATE	1	-
3	503875402	BAR BOLT	1	-
4	537334601	BAR BOLT	1	-
5	544036401	BAR BOLT	1	-
6	503240905	NEEDLE ROLLER	1	-
7	530026119	CHECK VALVE	1	-
8	537403501	FILTER	1	-
9	544083301	OIL SCREEN	1	-
10	544331601	GUIDE PIN	3	-
11	503869301	SUPPORT	1	-
12	522620003	TANK CAP ASSY	1	-
13	589241101	GASKET	1	-
14	503578901	HOLDER	1	-
15	503886301	PIN	1	-
16	503218876	SCREW IHSCT	2	-
17	501007601	SUPPORT	1	-
18	503215103	SCREW IHSCT	1	-
19	544284601	CHAIN GUIDE PLATE	1	-
20	503217010	SCREW CCRPANT	1	-
21	544286501	SPIKE	1	-
22	503217520	SCREW IHSCFT	2	-
23	544251501	HAND GUARD	1	-
24	503892401	LOCK	1	-
25	503893001	SCREW	2	-
26	503436501	POSITION SPRING	1	-

Ref.	Article N.	Description	Qty	Kit
1	525604601	CRANKSHAFT ASSY -	1	-
2	544248702	BALL BEARING -	1	-
3	544251201	SEALING -	1	-
4	544248802	BALL BEARING -	1	-
5	544251301	SEALING -	1	-
6	503414101	NEEDLE BEARING -	1	-
1	504790201	CYLINDER COVER ASSY	1	-
2	522736001	LABEL	1	-
3	595303001	SNAP LOCKING	3	-
1	504735101	CYLINDER -	1	-
2	502625007	PISTON ASSY -	1	-
3	544405901	PISTON RING -	1	-
4	544406001	PISTON PIN -	1	-
5	737441000	SNAP RING -	2	-
6	503414101	NEEDLE BEARING -	1	-
7	544396001	GASKET -	1	-
8	544395901	GASKET -	1	-
9	725533355	SCREW IHSCM -	4	-
10	503235111	SPARK PLUG -	1	-
11	504794001	GASKET -	1	-
1	544193805	FUEL TANK	1	-
2	503212810	SCREW CCRPANT	1	-
3	720182520	PARALLEL PIN	1	-
4	544968501	THROTTLE CONTROL	1	-
5	544099901	SPRING	1	-

Ref.	Article N.	Description	Qty	Kit
6	579239401	THROTTLE LOCKOUT	1	-
7	531246601	HANDLE INSERT *Grey soft*	1	-
8	544128604	FUEL HOSE	1	-
9	503443201	FUEL FILTER	1	-
10	577535101	RETURN HOSE	1	-
11	522620003	TANK CAP ASSY	1	-
12	589241101	GASKET	1	-
13	503578901	HOLDER	1	-
14	544375001	LABEL	1	-
15	501007601	SUPPORT	1	-
16	504795601	ANTIVIBRATION ELEMENT	2	-
17	721126339	GROOVED PIN	1	-
18	501152901	TANK VENT ASSY	1	-
1	544284001	FRONT HANDLE -	1	-
2	503218876	SCREW IHSCT -	3	-
3	503898301	ANTIVIBRATION ELEMENT -	1	-
1	580279801	FLYWHEEL ASSY -	1	-
2	537245601	STARTER PAWL -	2	-
3	501819903	SCREW -	2	-
4	503230042	WASHER -	2	-
5	529271101	SPRING -	2	-
6	503220401	NUT -	1	-
7	579638804	IGNITION MODULE -	1	-
8	510101401	WIRING ASSY -	1	-
9	503200220	SCREW IHSCFM -	2	-
1	544147702	MUFFLER ASSY -	1	-
2	579753301	SCREEN -	1	-

Ref.	Article N.	Description	Qty	Kit
3	501323101	HEAT DEFLECTOR -	1	-
4	579753101	GASKET -	1	-
5	725536855	SCREW IHSCM -	2	-
6	724128759	SCREW CRPANM -	1	-
7	504794001	GASKET -	1	-
1	504597002	STARTER ASSY -	1	-
2	504596902	STARTER -	1	-
3	537283201	SLEEVE -	1	-
4	540057502	SPRING CASSETTE ASSY -	1	-
5	503212810	SCREW CCRPANT -	2	-
6	504597101	STARTER PULLEY -	1	-
7	503217716	SCREW IHSCT -	1	-
8	505305125	STARTER ROPE -	1	-
9	537232501	STARTER HANDLE -	1	-
10	503217321	SCREW -	4	-
11	504546805	LABEL -	1	-
12	544197102	AIR CONDUCTOR -	1	-
1	505450401	WINTER KIT *Winter kit*	1	-
2	503217016	SCREW CCRPANT *Screw*	2	-
3	503405901	WINTER PLUG *Winter plug*	1	-
1	501388201	CLUTCH COVER ASSY -	0	-
2	735310820	E-CLIP	1	-

Ref.	Article N.	Description	Qty	Kit
		-		
3	537286601	PAWL -	1	-
4	540063301	CHAIN GUIDE -	1	-
5	537017401	BEARING SLEEVE -	1	-
6	503890802	KNEE JOINT ASSY -	1	-
7	505892601	BRAKE SPRING -	1	-
8	503855201	GUIDE BUSHING -	1	-
9	544248501	COVER LID -	1	-
10	503217010	SCREW CCRPANT -	7	-
11	544253101	WEAR PROTECTION -	1	-
12	544306001	BRAKE BAND ASSY -	1	-
13	503892901	PIN -	1	-
14	537397001	WORM SCREW -	1	-
15	537079402	WORM WHEEL -	1	-
16	740480702	O-RING -	1	-
17	503230063	WASHER -	1	-
18	544376801	LABEL -	1	-
19	503220001	HEXAGON NUT -	1	-

HANDLE

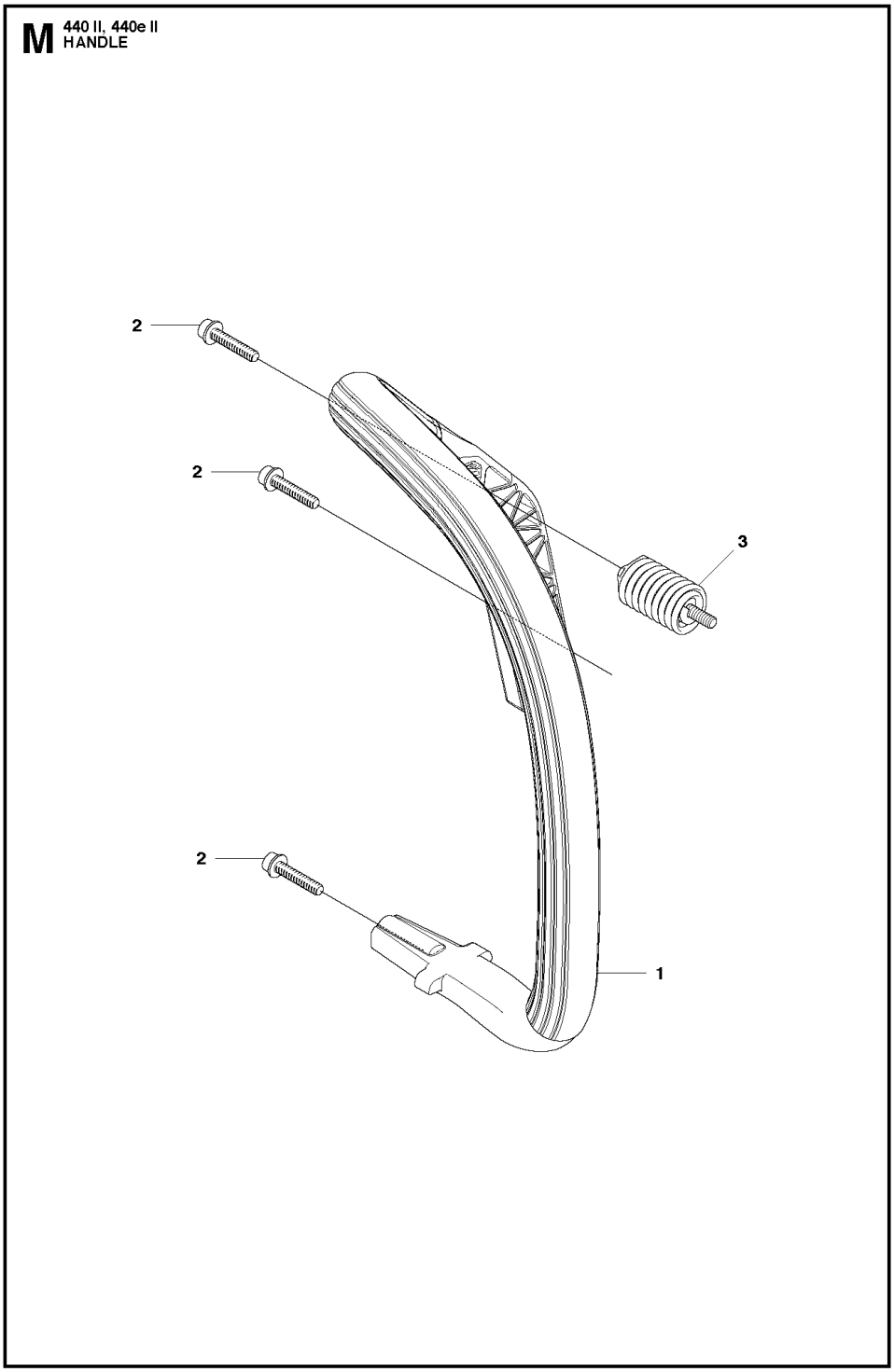

Ref.	Article N.	Description	Qty	Kit
1	501691701	COMBINATION WRENCH -	1	-
1	504724701	INSULATION WALL	1	-
2	504724501	INSULATION WALL	1	-
3	504724401	INSULATION WALL	1	-
4	504201202	INLET PIPE	1	-

Ref.	Article N.	Description	Qty	Kit
5	503200216	SCREW IHSCFM	4	-
6	547727401	CARBURETTOR *Zama Z014-120-0601-F*	1	-
7	544284401	THROTTLE ROD ASSY	1	-
8	544976402	FILTER HOLDER	1	-
9	544392601	SHACKLE	1	-
10	504712501	GUIDE	1	-
11	544844306	CONTROL	1	-
12	544976601	SCREW	1	-
13	503200240	SCREW IHSCFM	3	-
14	544805403	AIR FILTER *Non-Woven - Clear*	1	-
14	599729401	AIR FILTER ASSY *Nylon Mesh - 44 Micron Rating - Black*	1	-
15	503936601	PURGE	1	-
16	544401901	HOSE	1	-
1	547727401	CARBURETTOR *Zama Z014-120-0601-F*	1	-
2	503481101	PIECE	1	-
3	504024001	NOZZLE ASSY	1	-
4	503535601	PLUG WELCH	1	-
5	503479701	VALVE	1	-
6	537020301	SPRING	1	-
7	503665901	LEVER	1	-
8	503480001	PIN RETAINING SCREW	1	-
9	504024101	SCREW	1	-
10	505535201	HUB CAP	1	-
11	504026101	SHAFT ASSY	1	-
12	505110701	COLLAR	1	-
13	504028501	SPRING	1	-
14	504027501	VALVE	1	-
15	503481801	SCREW	2	-
16	504026701	CIRCLIP	2	-
17	504026201	SHAFT ASSY	1	-
18	540053701	LEVER	1	-
19	504028301	SPRING	1	-
20	504026301	LEVER	1	-
21	503479001	SCREW	2	-
22	504027401	VALVE	1	-

Ref.	Article N.	Description	Qty	Kit
23	503481801	SCREW	2	-
24	504026001	SHAFT ASSY	1	-
25	504028401	SPRING	1	-
26	544983101	LEVER	1	-
27	503479001	SCREW	2	-
28	504027601	VALVE	1	-
29	503479201	SCREW	1	-
30	504027301	SCREW	1	-
31	504909201	SCREW	1	-
32	504028101	SCREW	1	-
33	504024301	GASKET	1	-
34	504024501	DIAPHRAGM	1	-
35	504024601	BODY	1	-
36	504028201	SCREW	1	-
37	504025001	STRAINER	1	-
38	504025601	DIAPHRAGM	1	-
39	504025701	GASKET	1	-
40	504025901	COVER	1	-
41	504027801	SCREW	4	-
42	504028601	GASKET KIT	1	-
1	544194905	CLUTCH COVER ASSY *Orange*	1	-
1	544194915	CLUTCH COVER ASSY *Grey*	1	-
2	504542801	COVER LID	1	-
3	544306001	BRAKE BAND ASSY	1	-
4	544253101	WEAR PROTECTION	1	-
5	503855201	GUIDE BUSHING	1	-
6	505892601	BRAKE SPRING	1	-
7	544248501	COVER LID	1	-
8	503890802	KNEE JOINT ASSY	1	-
9	503892901	PIN	1	-
10	735310820	E-CLIP	1	-
11	537392901	SCREW	1	-
12	537347201	GEAR ASSY	1	-
13	537392601	HEAT PROTECTOR	1	-
14	544357501	LABEL	1	-
15	503217010	SCREW CCRPANT	10	-
16	525354301	BEARING SLEEVE	1	-

Ref.	Article N.	Description	Qty	Kit
17	505321001	WEAR PLATE	1	-
18	537347801	KNOB	1	-
1	575568001	CLUTCH ASSY	1	-
2	574718801	CLUTCH SPRING	2	-
3	505441501	CLUTCH DRUM ASSY	1	-
4	503539201	NEEDLE BEARING	1	-
5	536860001	WORM GEAR	1	-
6	540057901	PUMP PISTON	1	-
7	537154801	PUMP CYLINDER	1	-
8	544084202	OIL HOSE	1	-
1	544932507	CRANKCASE ASSY *Orange*	1	-
1	544932508	CRANKCASE ASSY *Grey*	1	-
2	503875802	STIFFENING PLATE	1	-
3	503875402	BAR BOLT	1	-
4	537334601	BAR BOLT	1	-
5	544036401	BAR BOLT	1	-
6	503240905	NEEDLE ROLLER	1	-
7	530026119	CHECK VALVE	1	-
8	537403501	FILTER	1	-
9	544083301	OIL SCREEN	1	-
10	544331601	GUIDE PIN	3	-
11	503869301	SUPPORT	1	-
12	522620003	TANK CAP ASSY	1	-
13	589241101	GASKET	1	-
14	503578901	HOLDER	1	-
15	503886301	PIN	1	-
16	503218876	SCREW IHSCT	2	-
17	501007601	SUPPORT	1	-
18	503215103	SCREW IHSCT	1	-
19	544284601	CHAIN GUIDE PLATE	1	-
20	503217010	SCREW CCRPANT	1	-
21	544286501	SPIKE	1	-
22	503217520	SCREW IHSCFT	2	-
23	544251501	HAND GUARD	1	-
24	503892401	LOCK	1	-
25	503893001	SCREW	2	-
26	503436501	POSITION SPRING	1	-

Ref.	Article N.	Description	Qty	Kit
1	525604601	CRANKSHAFT ASSY -	1	-
2	544248702	BALL BEARING -	1	-
3	544251201	SEALING -	1	-
4	544248802	BALL BEARING -	1	-
5	544251301	SEALING -	1	-
6	503414101	NEEDLE BEARING -	1	-
1	504790201	CYLINDER COVER ASSY	1	-
2	522736001	LABEL	1	-
3	595303001	SNAP LOCKING	3	-
1	504735101	CYLINDER -	1	-
2	502625007	PISTON ASSY -	1	-
3	544405901	PISTON RING -	1	-
4	544406001	PISTON PIN -	1	-
5	737441000	SNAP RING -	2	-
6	503414101	NEEDLE BEARING -	1	-
7	544396001	GASKET -	1	-
8	544395901	GASKET -	1	-
9	725533355	SCREW IHSCM -	4	-
10	503235111	SPARK PLUG -	1	-
11	504794001	GASKET -	1	-
1	544193805	FUEL TANK	1	-
2	503212810	SCREW CCRPANT	1	-
3	720182520	PARALLEL PIN	1	-
4	544968501	THROTTLE CONTROL	1	-
5	544099901	SPRING	1	-

Ref.	Article N.	Description	Qty	Kit
6	579239401	THROTTLE LOCKOUT	1	-
7	531246601	HANDLE INSERT *Grey soft*	1	-
8	544128604	FUEL HOSE	1	-
9	503443201	FUEL FILTER	1	-
10	577535101	RETURN HOSE	1	-
11	522620003	TANK CAP ASSY	1	-
12	589241101	GASKET	1	-
13	503578901	HOLDER	1	-
14	544375001	LABEL	1	-
15	501007601	SUPPORT	1	-
16	504795601	ANTIVIBRATION ELEMENT	2	-
17	721126339	GROOVED PIN	1	-
18	501152901	TANK VENT ASSY	1	-
1	544284001	FRONT HANDLE -	1	-
2	503218876	SCREW IHSCT -	3	-
3	503898301	ANTIVIBRATION ELEMENT -	1	-
1	580279801	FLYWHEEL ASSY -	1	-
2	537245601	STARTER PAWL -	2	-
3	501819903	SCREW -	2	-
4	503230042	WASHER -	2	-
5	529271101	SPRING -	2	-
6	503220401	NUT -	1	-
7	579638804	IGNITION MODULE -	1	-
8	510101401	WIRING ASSY -	1	-
9	503200220	SCREW IHSCFM -	2	-
1	544147702	MUFFLER ASSY -	1	-
2	579753301	SCREEN -	1	-

Ref.	Article N.	Description	Qty	Kit
3	501323101	HEAT DEFLECTOR -	1	-
4	579753101	GASKET -	1	-
5	725536855	SCREW IHSCM -	2	-
6	724128759	SCREW CRPANM -	1	-
7	504794001	GASKET -	1	-
1	504597002	STARTER ASSY -	1	-
2	504596902	STARTER -	1	-
3	537283201	SLEEVE -	1	-
4	540057502	SPRING CASSETTE ASSY -	1	-
5	503212810	SCREW CCRPANT -	2	-
6	504597101	STARTER PULLEY -	1	-
7	503217716	SCREW IHSCT -	1	-
8	505305125	STARTER ROPE -	1	-
9	537232501	STARTER HANDLE -	1	-
10	503217321	SCREW -	4	-
11	504546805	LABEL -	1	-
12	544197102	AIR CONDUCTOR -	1	-
1	505450401	WINTER KIT *Winter kit*	1	-
2	503217016	SCREW CCRPANT *Screw*	2	-
3	503405901	WINTER PLUG *Winter plug*	1	-
1	501388201	CLUTCH COVER ASSY -	0	-
2	735310820	E-CLIP	1	-

Ref.	Article N.	Description	Qty	Kit
		-		
3	537286601	PAWL -	1	-
4	540063301	CHAIN GUIDE -	1	-
5	537017401	BEARING SLEEVE -	1	-
6	503890802	KNEE JOINT ASSY -	1	-
7	505892601	BRAKE SPRING -	1	-
8	503855201	GUIDE BUSHING -	1	-
9	544248501	COVER LID -	1	-
10	503217010	SCREW CCRPANT -	7	-
11	544253101	WEAR PROTECTION -	1	-
12	544306001	BRAKE BAND ASSY -	1	-
13	503892901	PIN -	1	-
14	537397001	WORM SCREW -	1	-
15	537079402	WORM WHEEL -	1	-
16	740480702	O-RING -	1	-
17	503230063	WASHER -	1	-
18	544376801	LABEL -	1	-
19	503220001	HEXAGON NUT -	1	-

IGNITION SYSTEM

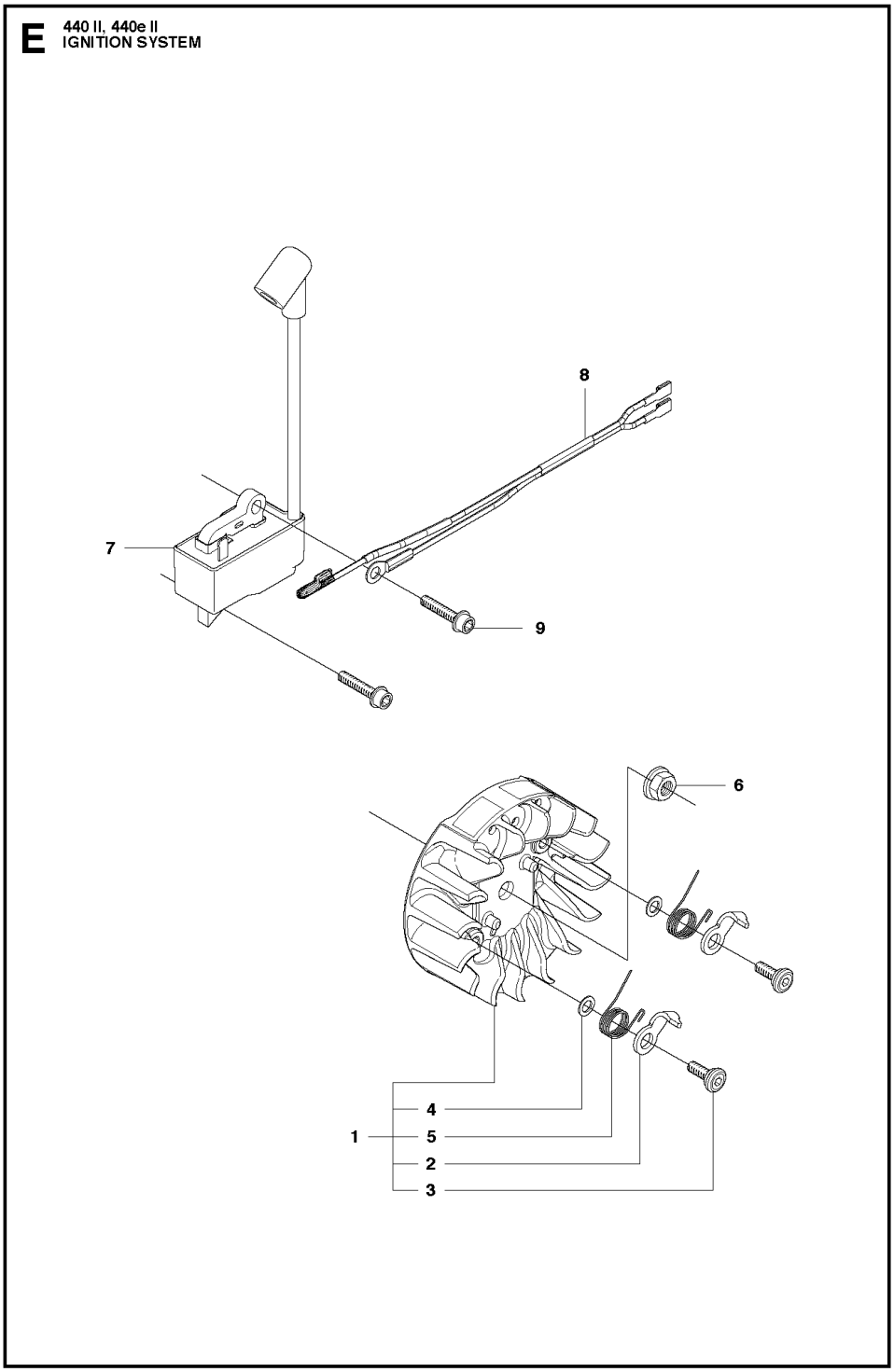

Ref.	Article N.	Description	Qty	Kit
1	501691701	COMBINATION WRENCH -	1	-
1	504724701	INSULATION WALL	1	-
2	504724501	INSULATION WALL	1	-
3	504724401	INSULATION WALL	1	-
4	504201202	INLET PIPE	1	-

Ref.	Article N.	Description	Qty	Kit
5	503200216	SCREW IHSCFM	4	-
6	547727401	CARBURETTOR *Zama Z014-120-0601-F*	1	-
7	544284401	THROTTLE ROD ASSY	1	-
8	544976402	FILTER HOLDER	1	-
9	544392601	SHACKLE	1	-
10	504712501	GUIDE	1	-
11	544844306	CONTROL	1	-
12	544976601	SCREW	1	-
13	503200240	SCREW IHSCFM	3	-
14	544805403	AIR FILTER *Non-Woven - Clear*	1	-
14	599729401	AIR FILTER ASSY *Nylon Mesh - 44 Micron Rating - Black*	1	-
15	503936601	PURGE	1	-
16	544401901	HOSE	1	-
1	547727401	CARBURETTOR *Zama Z014-120-0601-F*	1	-
2	503481101	PIECE	1	-
3	504024001	NOZZLE ASSY	1	-
4	503535601	PLUG WELCH	1	-
5	503479701	VALVE	1	-
6	537020301	SPRING	1	-
7	503665901	LEVER	1	-
8	503480001	PIN RETAINING SCREW	1	-
9	504024101	SCREW	1	-
10	505535201	HUB CAP	1	-
11	504026101	SHAFT ASSY	1	-
12	505110701	COLLAR	1	-
13	504028501	SPRING	1	-
14	504027501	VALVE	1	-
15	503481801	SCREW	2	-
16	504026701	CIRCLIP	2	-
17	504026201	SHAFT ASSY	1	-
18	540053701	LEVER	1	-
19	504028301	SPRING	1	-
20	504026301	LEVER	1	-
21	503479001	SCREW	2	-
22	504027401	VALVE	1	-

Ref.	Article N.	Description	Qty	Kit
23	503481801	SCREW	2	-
24	504026001	SHAFT ASSY	1	-
25	504028401	SPRING	1	-
26	544983101	LEVER	1	-
27	503479001	SCREW	2	-
28	504027601	VALVE	1	-
29	503479201	SCREW	1	-
30	504027301	SCREW	1	-
31	504909201	SCREW	1	-
32	504028101	SCREW	1	-
33	504024301	GASKET	1	-
34	504024501	DIAPHRAGM	1	-
35	504024601	BODY	1	-
36	504028201	SCREW	1	-
37	504025001	STRAINER	1	-
38	504025601	DIAPHRAGM	1	-
39	504025701	GASKET	1	-
40	504025901	COVER	1	-
41	504027801	SCREW	4	-
42	504028601	GASKET KIT	1	-
1	544194905	CLUTCH COVER ASSY *Orange*	1	-
1	544194915	CLUTCH COVER ASSY *Grey*	1	-
2	504542801	COVER LID	1	-
3	544306001	BRAKE BAND ASSY	1	-
4	544253101	WEAR PROTECTION	1	-
5	503855201	GUIDE BUSHING	1	-
6	505892601	BRAKE SPRING	1	-
7	544248501	COVER LID	1	-
8	503890802	KNEE JOINT ASSY	1	-
9	503892901	PIN	1	-
10	735310820	E-CLIP	1	-
11	537392901	SCREW	1	-
12	537347201	GEAR ASSY	1	-
13	537392601	HEAT PROTECTOR	1	-
14	544357501	LABEL	1	-
15	503217010	SCREW CCRPANT	10	-
16	525354301	BEARING SLEEVE	1	-

Ref.	Article N.	Description	Qty	Kit
17	505321001	WEAR PLATE	1	-
18	537347801	KNOB	1	-
1	575568001	CLUTCH ASSY	1	-
2	574718801	CLUTCH SPRING	2	-
3	505441501	CLUTCH DRUM ASSY	1	-
4	503539201	NEEDLE BEARING	1	-
5	536860001	WORM GEAR	1	-
6	540057901	PUMP PISTON	1	-
7	537154801	PUMP CYLINDER	1	-
8	544084202	OIL HOSE	1	-
1	544932507	CRANKCASE ASSY *Orange*	1	-
1	544932508	CRANKCASE ASSY *Grey*	1	-
2	503875802	STIFFENING PLATE	1	-
3	503875402	BAR BOLT	1	-
4	537334601	BAR BOLT	1	-
5	544036401	BAR BOLT	1	-
6	503240905	NEEDLE ROLLER	1	-
7	530026119	CHECK VALVE	1	-
8	537403501	FILTER	1	-
9	544083301	OIL SCREEN	1	-
10	544331601	GUIDE PIN	3	-
11	503869301	SUPPORT	1	-
12	522620003	TANK CAP ASSY	1	-
13	589241101	GASKET	1	-
14	503578901	HOLDER	1	-
15	503886301	PIN	1	-
16	503218876	SCREW IHSCT	2	-
17	501007601	SUPPORT	1	-
18	503215103	SCREW IHSCT	1	-
19	544284601	CHAIN GUIDE PLATE	1	-
20	503217010	SCREW CCRPANT	1	-
21	544286501	SPIKE	1	-
22	503217520	SCREW IHSCFT	2	-
23	544251501	HAND GUARD	1	-
24	503892401	LOCK	1	-
25	503893001	SCREW	2	-
26	503436501	POSITION SPRING	1	-

Ref.	Article N.	Description	Qty	Kit
1	525604601	CRANKSHAFT ASSY -	1	-
2	544248702	BALL BEARING -	1	-
3	544251201	SEALING -	1	-
4	544248802	BALL BEARING -	1	-
5	544251301	SEALING -	1	-
6	503414101	NEEDLE BEARING -	1	-
1	504790201	CYLINDER COVER ASSY	1	-
2	522736001	LABEL	1	-
3	595303001	SNAP LOCKING	3	-
1	504735101	CYLINDER -	1	-
2	502625007	PISTON ASSY -	1	-
3	544405901	PISTON RING -	1	-
4	544406001	PISTON PIN -	1	-
5	737441000	SNAP RING -	2	-
6	503414101	NEEDLE BEARING -	1	-
7	544396001	GASKET -	1	-
8	544395901	GASKET -	1	-
9	725533355	SCREW IHSCM -	4	-
10	503235111	SPARK PLUG -	1	-
11	504794001	GASKET -	1	-
1	544193805	FUEL TANK	1	-
2	503212810	SCREW CCRPANT	1	-
3	720182520	PARALLEL PIN	1	-
4	544968501	THROTTLE CONTROL	1	-
5	544099901	SPRING	1	-

Ref.	Article N.	Description	Qty	Kit
6	579239401	THROTTLE LOCKOUT	1	-
7	531246601	HANDLE INSERT *Grey soft*	1	-
8	544128604	FUEL HOSE	1	-
9	503443201	FUEL FILTER	1	-
10	577535101	RETURN HOSE	1	-
11	522620003	TANK CAP ASSY	1	-
12	589241101	GASKET	1	-
13	503578901	HOLDER	1	-
14	544375001	LABEL	1	-
15	501007601	SUPPORT	1	-
16	504795601	ANTIVIBRATION ELEMENT	2	-
17	721126339	GROOVED PIN	1	-
18	501152901	TANK VENT ASSY	1	-
1	544284001	FRONT HANDLE -	1	-
2	503218876	SCREW IHSCT -	3	-
3	503898301	ANTIVIBRATION ELEMENT -	1	-
1	580279801	FLYWHEEL ASSY -	1	-
2	537245601	STARTER PAWL -	2	-
3	501819903	SCREW -	2	-
4	503230042	WASHER -	2	-
5	529271101	SPRING -	2	-
6	503220401	NUT -	1	-
7	579638804	IGNITION MODULE -	1	-
8	510101401	WIRING ASSY -	1	-
9	503200220	SCREW IHSCFM -	2	-
1	544147702	MUFFLER ASSY -	1	-
2	579753301	SCREEN -	1	-

Ref.	Article N.	Description	Qty	Kit
3	501323101	HEAT DEFLECTOR -	1	-
4	579753101	GASKET -	1	-
5	725536855	SCREW IHSCM -	2	-
6	724128759	SCREW CRPANM -	1	-
7	504794001	GASKET -	1	-
1	504597002	STARTER ASSY -	1	-
2	504596902	STARTER -	1	-
3	537283201	SLEEVE -	1	-
4	540057502	SPRING CASSETTE ASSY -	1	-
5	503212810	SCREW CCRPANT -	2	-
6	504597101	STARTER PULLEY -	1	-
7	503217716	SCREW IHSCT -	1	-
8	505305125	STARTER ROPE -	1	-
9	537232501	STARTER HANDLE -	1	-
10	503217321	SCREW -	4	-
11	504546805	LABEL -	1	-
12	544197102	AIR CONDUCTOR -	1	-
1	505450401	WINTER KIT *Winter kit*	1	-
2	503217016	SCREW CCRPANT *Screw*	2	-
3	503405901	WINTER PLUG *Winter plug*	1	-
1	501388201	CLUTCH COVER ASSY -	0	-
2	735310820	E-CLIP	1	-

Ref.	Article N.	Description	Qty	Kit
		-		
3	537286601	PAWL -	1	-
4	540063301	CHAIN GUIDE -	1	-
5	537017401	BEARING SLEEVE -	1	-
6	503890802	KNEE JOINT ASSY -	1	-
7	505892601	BRAKE SPRING -	1	-
8	503855201	GUIDE BUSHING -	1	-
9	544248501	COVER LID -	1	-
10	503217010	SCREW CCRPANT -	7	-
11	544253101	WEAR PROTECTION -	1	-
12	544306001	BRAKE BAND ASSY -	1	-
13	503892901	PIN -	1	-
14	537397001	WORM SCREW -	1	-
15	537079402	WORM WHEEL -	1	-
16	740480702	O-RING -	1	-
17	503230063	WASHER -	1	-
18	544376801	LABEL -	1	-
19	503220001	HEXAGON NUT -	1	-

MUFFLER

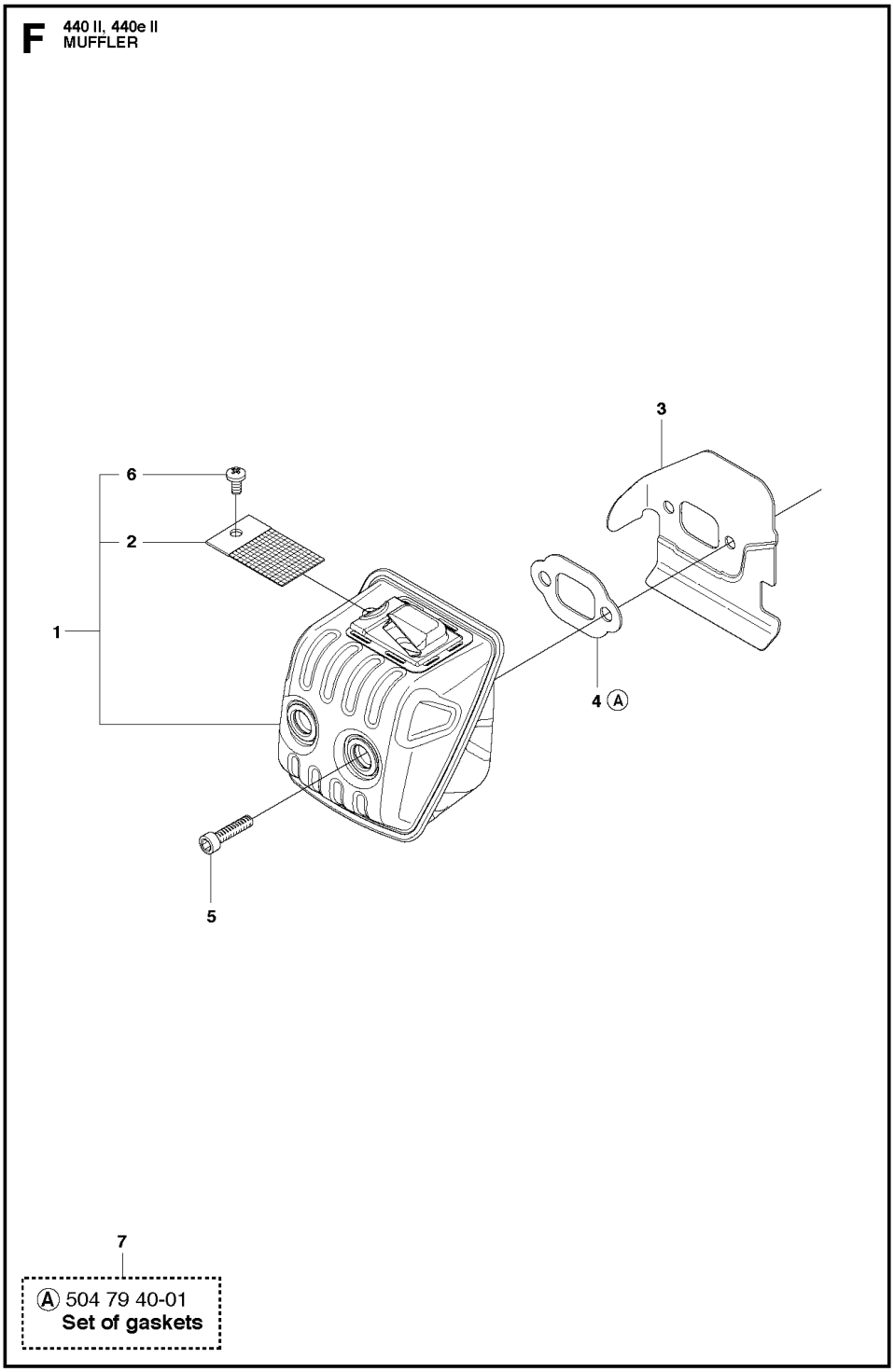

Ref.	Article N.	Description	Qty	Kit
1	501691701	COMBINATION WRENCH -	1	-
1	504724701	INSULATION WALL	1	-
2	504724501	INSULATION WALL	1	-
3	504724401	INSULATION WALL	1	-
4	504201202	INLET PIPE	1	-

Ref.	Article N.	Description	Qty	Kit
5	503200216	SCREW IHSCFM	4	-
6	547727401	CARBURETTOR *Zama Z014-120-0601-F*	1	-
7	544284401	THROTTLE ROD ASSY	1	-
8	544976402	FILTER HOLDER	1	-
9	544392601	SHACKLE	1	-
10	504712501	GUIDE	1	-
11	544844306	CONTROL	1	-
12	544976601	SCREW	1	-
13	503200240	SCREW IHSCFM	3	-
14	544805403	AIR FILTER *Non-Woven - Clear*	1	-
14	599729401	AIR FILTER ASSY *Nylon Mesh - 44 Micron Rating - Black*	1	-
15	503936601	PURGE	1	-
16	544401901	HOSE	1	-
1	547727401	CARBURETTOR *Zama Z014-120-0601-F*	1	-
2	503481101	PIECE	1	-
3	504024001	NOZZLE ASSY	1	-
4	503535601	PLUG WELCH	1	-
5	503479701	VALVE	1	-
6	537020301	SPRING	1	-
7	503665901	LEVER	1	-
8	503480001	PIN RETAINING SCREW	1	-
9	504024101	SCREW	1	-
10	505535201	HUB CAP	1	-
11	504026101	SHAFT ASSY	1	-
12	505110701	COLLAR	1	-
13	504028501	SPRING	1	-
14	504027501	VALVE	1	-
15	503481801	SCREW	2	-
16	504026701	CIRCLIP	2	-
17	504026201	SHAFT ASSY	1	-
18	540053701	LEVER	1	-
19	504028301	SPRING	1	-
20	504026301	LEVER	1	-
21	503479001	SCREW	2	-
22	504027401	VALVE	1	-

Ref.	Article N.	Description	Qty	Kit
23	503481801	SCREW	2	-
24	504026001	SHAFT ASSY	1	-
25	504028401	SPRING	1	-
26	544983101	LEVER	1	-
27	503479001	SCREW	2	-
28	504027601	VALVE	1	-
29	503479201	SCREW	1	-
30	504027301	SCREW	1	-
31	504909201	SCREW	1	-
32	504028101	SCREW	1	-
33	504024301	GASKET	1	-
34	504024501	DIAPHRAGM	1	-
35	504024601	BODY	1	-
36	504028201	SCREW	1	-
37	504025001	STRAINER	1	-
38	504025601	DIAPHRAGM	1	-
39	504025701	GASKET	1	-
40	504025901	COVER	1	-
41	504027801	SCREW	4	-
42	504028601	GASKET KIT	1	-
1	544194905	CLUTCH COVER ASSY *Orange*	1	-
1	544194915	CLUTCH COVER ASSY *Grey*	1	-
2	504542801	COVER LID	1	-
3	544306001	BRAKE BAND ASSY	1	-
4	544253101	WEAR PROTECTION	1	-
5	503855201	GUIDE BUSHING	1	-
6	505892601	BRAKE SPRING	1	-
7	544248501	COVER LID	1	-
8	503890802	KNEE JOINT ASSY	1	-
9	503892901	PIN	1	-
10	735310820	E-CLIP	1	-
11	537392901	SCREW	1	-
12	537347201	GEAR ASSY	1	-
13	537392601	HEAT PROTECTOR	1	-
14	544357501	LABEL	1	-
15	503217010	SCREW CCRPANT	10	-
16	525354301	BEARING SLEEVE	1	-

Ref.	Article N.	Description	Qty	Kit
17	505321001	WEAR PLATE	1	-
18	537347801	KNOB	1	-
1	575568001	CLUTCH ASSY	1	-
2	574718801	CLUTCH SPRING	2	-
3	505441501	CLUTCH DRUM ASSY	1	-
4	503539201	NEEDLE BEARING	1	-
5	536860001	WORM GEAR	1	-
6	540057901	PUMP PISTON	1	-
7	537154801	PUMP CYLINDER	1	-
8	544084202	OIL HOSE	1	-
1	544932507	CRANKCASE ASSY *Orange*	1	-
1	544932508	CRANKCASE ASSY *Grey*	1	-
2	503875802	STIFFENING PLATE	1	-
3	503875402	BAR BOLT	1	-
4	537334601	BAR BOLT	1	-
5	544036401	BAR BOLT	1	-
6	503240905	NEEDLE ROLLER	1	-
7	530026119	CHECK VALVE	1	-
8	537403501	FILTER	1	-
9	544083301	OIL SCREEN	1	-
10	544331601	GUIDE PIN	3	-
11	503869301	SUPPORT	1	-
12	522620003	TANK CAP ASSY	1	-
13	589241101	GASKET	1	-
14	503578901	HOLDER	1	-
15	503886301	PIN	1	-
16	503218876	SCREW IHSCT	2	-
17	501007601	SUPPORT	1	-
18	503215103	SCREW IHSCT	1	-
19	544284601	CHAIN GUIDE PLATE	1	-
20	503217010	SCREW CCRPANT	1	-
21	544286501	SPIKE	1	-
22	503217520	SCREW IHSCFT	2	-
23	544251501	HAND GUARD	1	-
24	503892401	LOCK	1	-
25	503893001	SCREW	2	-
26	503436501	POSITION SPRING	1	-

Ref.	Article N.	Description	Qty	Kit
1	525604601	CRANKSHAFT ASSY -	1	-
2	544248702	BALL BEARING -	1	-
3	544251201	SEALING -	1	-
4	544248802	BALL BEARING -	1	-
5	544251301	SEALING -	1	-
6	503414101	NEEDLE BEARING -	1	-
1	504790201	CYLINDER COVER ASSY	1	-
2	522736001	LABEL	1	-
3	595303001	SNAP LOCKING	3	-
1	504735101	CYLINDER -	1	-
2	502625007	PISTON ASSY -	1	-
3	544405901	PISTON RING -	1	-
4	544406001	PISTON PIN -	1	-
5	737441000	SNAP RING -	2	-
6	503414101	NEEDLE BEARING -	1	-
7	544396001	GASKET -	1	-
8	544395901	GASKET -	1	-
9	725533355	SCREW IHSCM -	4	-
10	503235111	SPARK PLUG -	1	-
11	504794001	GASKET -	1	-
1	544193805	FUEL TANK	1	-
2	503212810	SCREW CCRPANT	1	-
3	720182520	PARALLEL PIN	1	-
4	544968501	THROTTLE CONTROL	1	-
5	544099901	SPRING	1	-

Ref.	Article N.	Description	Qty	Kit
6	579239401	THROTTLE LOCKOUT	1	-
7	531246601	HANDLE INSERT *Grey soft*	1	-
8	544128604	FUEL HOSE	1	-
9	503443201	FUEL FILTER	1	-
10	577535101	RETURN HOSE	1	-
11	522620003	TANK CAP ASSY	1	-
12	589241101	GASKET	1	-
13	503578901	HOLDER	1	-
14	544375001	LABEL	1	-
15	501007601	SUPPORT	1	-
16	504795601	ANTIVIBRATION ELEMENT	2	-
17	721126339	GROOVED PIN	1	-
18	501152901	TANK VENT ASSY	1	-
1	544284001	FRONT HANDLE -	1	-
2	503218876	SCREW IHSCT -	3	-
3	503898301	ANTIVIBRATION ELEMENT -	1	-
1	580279801	FLYWHEEL ASSY -	1	-
2	537245601	STARTER PAWL -	2	-
3	501819903	SCREW -	2	-
4	503230042	WASHER -	2	-
5	529271101	SPRING -	2	-
6	503220401	NUT -	1	-
7	579638804	IGNITION MODULE -	1	-
8	510101401	WIRING ASSY -	1	-
9	503200220	SCREW IHSCFM -	2	-
1	544147702	MUFFLER ASSY -	1	-
2	579753301	SCREEN -	1	-

Ref.	Article N.	Description	Qty	Kit
3	501323101	HEAT DEFLECTOR -	1	-
4	579753101	GASKET -	1	-
5	725536855	SCREW IHSCM -	2	-
6	724128759	SCREW CRPANM -	1	-
7	504794001	GASKET -	1	-
1	504597002	STARTER ASSY -	1	-
2	504596902	STARTER -	1	-
3	537283201	SLEEVE -	1	-
4	540057502	SPRING CASSETTE ASSY -	1	-
5	503212810	SCREW CCRPANT -	2	-
6	504597101	STARTER PULLEY -	1	-
7	503217716	SCREW IHSCT -	1	-
8	505305125	STARTER ROPE -	1	-
9	537232501	STARTER HANDLE -	1	-
10	503217321	SCREW -	4	-
11	504546805	LABEL -	1	-
12	544197102	AIR CONDUCTOR -	1	-
1	505450401	WINTER KIT *Winter kit*	1	-
2	503217016	SCREW CCRPANT *Screw*	2	-
3	503405901	WINTER PLUG *Winter plug*	1	-
1	501388201	CLUTCH COVER ASSY -	0	-
2	735310820	E-CLIP	1	-

Ref.	Article N.	Description	Qty	Kit
		-		
3	537286601	PAWL -	1	-
4	540063301	CHAIN GUIDE -	1	-
5	537017401	BEARING SLEEVE -	1	-
6	503890802	KNEE JOINT ASSY -	1	-
7	505892601	BRAKE SPRING -	1	-
8	503855201	GUIDE BUSHING -	1	-
9	544248501	COVER LID -	1	-
10	503217010	SCREW CCRPANT -	7	-
11	544253101	WEAR PROTECTION -	1	-
12	544306001	BRAKE BAND ASSY -	1	-
13	503892901	PIN -	1	-
14	537397001	WORM SCREW -	1	-
15	537079402	WORM WHEEL -	1	-
16	740480702	O-RING -	1	-
17	503230063	WASHER -	1	-
18	544376801	LABEL -	1	-
19	503220001	HEXAGON NUT -	1	-

STARTER

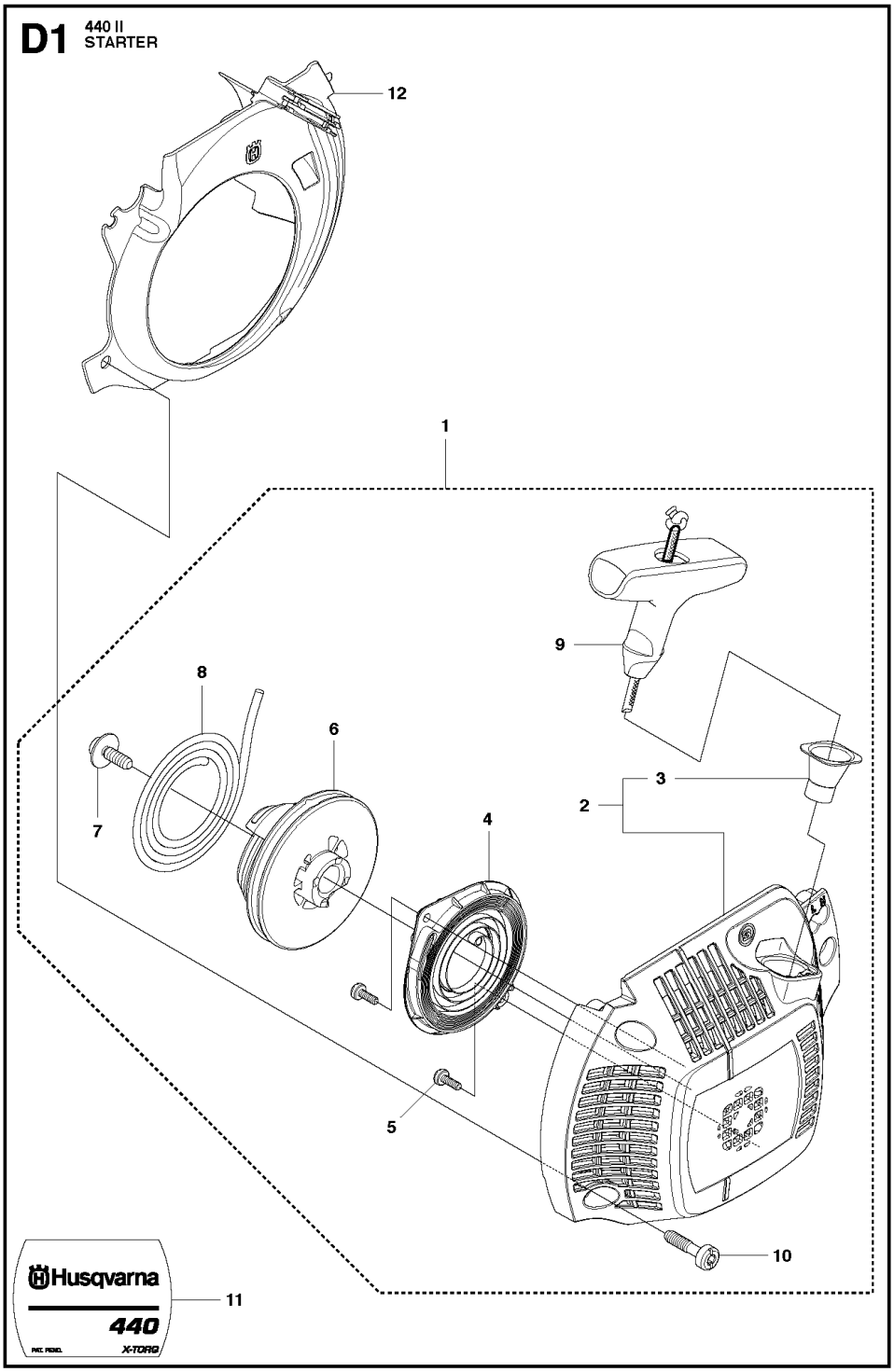

Ref.	Article N.	Description	Qty	Kit
1	501691701	COMBINATION WRENCH -	1	-
1	504724701	INSULATION WALL	1	-
2	504724501	INSULATION WALL	1	-
3	504724401	INSULATION WALL	1	-
4	504201202	INLET PIPE	1	-

Ref.	Article N.	Description	Qty	Kit
5	503200216	SCREW IHSCFM	4	-
6	547727401	CARBURETTOR *Zama Z014-120-0601-F*	1	-
7	544284401	THROTTLE ROD ASSY	1	-
8	544976402	FILTER HOLDER	1	-
9	544392601	SHACKLE	1	-
10	504712501	GUIDE	1	-
11	544844306	CONTROL	1	-
12	544976601	SCREW	1	-
13	503200240	SCREW IHSCFM	3	-
14	544805403	AIR FILTER *Non-Woven - Clear*	1	-
14	599729401	AIR FILTER ASSY *Nylon Mesh - 44 Micron Rating - Black*	1	-
15	503936601	PURGE	1	-
16	544401901	HOSE	1	-
1	547727401	CARBURETTOR *Zama Z014-120-0601-F*	1	-
2	503481101	PIECE	1	-
3	504024001	NOZZLE ASSY	1	-
4	503535601	PLUG WELCH	1	-
5	503479701	VALVE	1	-
6	537020301	SPRING	1	-
7	503665901	LEVER	1	-
8	503480001	PIN RETAINING SCREW	1	-
9	504024101	SCREW	1	-
10	505535201	HUB CAP	1	-
11	504026101	SHAFT ASSY	1	-
12	505110701	COLLAR	1	-
13	504028501	SPRING	1	-
14	504027501	VALVE	1	-
15	503481801	SCREW	2	-
16	504026701	CIRCLIP	2	-
17	504026201	SHAFT ASSY	1	-
18	540053701	LEVER	1	-
19	504028301	SPRING	1	-
20	504026301	LEVER	1	-
21	503479001	SCREW	2	-
22	504027401	VALVE	1	-

Ref.	Article N.	Description	Qty	Kit
23	503481801	SCREW	2	-
24	504026001	SHAFT ASSY	1	-
25	504028401	SPRING	1	-
26	544983101	LEVER	1	-
27	503479001	SCREW	2	-
28	504027601	VALVE	1	-
29	503479201	SCREW	1	-
30	504027301	SCREW	1	-
31	504909201	SCREW	1	-
32	504028101	SCREW	1	-
33	504024301	GASKET	1	-
34	504024501	DIAPHRAGM	1	-
35	504024601	BODY	1	-
36	504028201	SCREW	1	-
37	504025001	STRAINER	1	-
38	504025601	DIAPHRAGM	1	-
39	504025701	GASKET	1	-
40	504025901	COVER	1	-
41	504027801	SCREW	4	-
42	504028601	GASKET KIT	1	-
1	544194905	CLUTCH COVER ASSY *Orange*	1	-
1	544194915	CLUTCH COVER ASSY *Grey*	1	-
2	504542801	COVER LID	1	-
3	544306001	BRAKE BAND ASSY	1	-
4	544253101	WEAR PROTECTION	1	-
5	503855201	GUIDE BUSHING	1	-
6	505892601	BRAKE SPRING	1	-
7	544248501	COVER LID	1	-
8	503890802	KNEE JOINT ASSY	1	-
9	503892901	PIN	1	-
10	735310820	E-CLIP	1	-
11	537392901	SCREW	1	-
12	537347201	GEAR ASSY	1	-
13	537392601	HEAT PROTECTOR	1	-
14	544357501	LABEL	1	-
15	503217010	SCREW CCRPANT	10	-
16	525354301	BEARING SLEEVE	1	-

Ref.	Article N.	Description	Qty	Kit
17	505321001	WEAR PLATE	1	-
18	537347801	KNOB	1	-
1	575568001	CLUTCH ASSY	1	-
2	574718801	CLUTCH SPRING	2	-
3	505441501	CLUTCH DRUM ASSY	1	-
4	503539201	NEEDLE BEARING	1	-
5	536860001	WORM GEAR	1	-
6	540057901	PUMP PISTON	1	-
7	537154801	PUMP CYLINDER	1	-
8	544084202	OIL HOSE	1	-
1	544932507	CRANKCASE ASSY *Orange*	1	-
1	544932508	CRANKCASE ASSY *Grey*	1	-
2	503875802	STIFFENING PLATE	1	-
3	503875402	BAR BOLT	1	-
4	537334601	BAR BOLT	1	-
5	544036401	BAR BOLT	1	-
6	503240905	NEEDLE ROLLER	1	-
7	530026119	CHECK VALVE	1	-
8	537403501	FILTER	1	-
9	544083301	OIL SCREEN	1	-
10	544331601	GUIDE PIN	3	-
11	503869301	SUPPORT	1	-
12	522620003	TANK CAP ASSY	1	-
13	589241101	GASKET	1	-
14	503578901	HOLDER	1	-
15	503886301	PIN	1	-
16	503218876	SCREW IHSCT	2	-
17	501007601	SUPPORT	1	-
18	503215103	SCREW IHSCT	1	-
19	544284601	CHAIN GUIDE PLATE	1	-
20	503217010	SCREW CCRPANT	1	-
21	544286501	SPIKE	1	-
22	503217520	SCREW IHSCFT	2	-
23	544251501	HAND GUARD	1	-
24	503892401	LOCK	1	-
25	503893001	SCREW	2	-
26	503436501	POSITION SPRING	1	-

Ref.	Article N.	Description	Qty	Kit
1	525604601	CRANKSHAFT ASSY -	1	-
2	544248702	BALL BEARING -	1	-
3	544251201	SEALING -	1	-
4	544248802	BALL BEARING -	1	-
5	544251301	SEALING -	1	-
6	503414101	NEEDLE BEARING -	1	-
1	504790201	CYLINDER COVER ASSY	1	-
2	522736001	LABEL	1	-
3	595303001	SNAP LOCKING	3	-
1	504735101	CYLINDER -	1	-
2	502625007	PISTON ASSY -	1	-
3	544405901	PISTON RING -	1	-
4	544406001	PISTON PIN -	1	-
5	737441000	SNAP RING -	2	-
6	503414101	NEEDLE BEARING -	1	-
7	544396001	GASKET -	1	-
8	544395901	GASKET -	1	-
9	725533355	SCREW IHSCM -	4	-
10	503235111	SPARK PLUG -	1	-
11	504794001	GASKET -	1	-
1	544193805	FUEL TANK	1	-
2	503212810	SCREW CCRPANT	1	-
3	720182520	PARALLEL PIN	1	-
4	544968501	THROTTLE CONTROL	1	-
5	544099901	SPRING	1	-

Ref.	Article N.	Description	Qty	Kit
6	579239401	THROTTLE LOCKOUT	1	-
7	531246601	HANDLE INSERT *Grey soft*	1	-
8	544128604	FUEL HOSE	1	-
9	503443201	FUEL FILTER	1	-
10	577535101	RETURN HOSE	1	-
11	522620003	TANK CAP ASSY	1	-
12	589241101	GASKET	1	-
13	503578901	HOLDER	1	-
14	544375001	LABEL	1	-
15	501007601	SUPPORT	1	-
16	504795601	ANTIVIBRATION ELEMENT	2	-
17	721126339	GROOVED PIN	1	-
18	501152901	TANK VENT ASSY	1	-
1	544284001	FRONT HANDLE -	1	-
2	503218876	SCREW IHSCT -	3	-
3	503898301	ANTIVIBRATION ELEMENT -	1	-
1	580279801	FLYWHEEL ASSY -	1	-
2	537245601	STARTER PAWL -	2	-
3	501819903	SCREW -	2	-
4	503230042	WASHER -	2	-
5	529271101	SPRING -	2	-
6	503220401	NUT -	1	-
7	579638804	IGNITION MODULE -	1	-
8	510101401	WIRING ASSY -	1	-
9	503200220	SCREW IHSCFM -	2	-
1	544147702	MUFFLER ASSY -	1	-
2	579753301	SCREEN -	1	-

Ref.	Article N.	Description	Qty	Kit
3	501323101	HEAT DEFLECTOR -	1	-
4	579753101	GASKET -	1	-
5	725536855	SCREW IHSCM -	2	-
6	724128759	SCREW CRPANM -	1	-
7	504794001	GASKET -	1	-
1	504597002	STARTER ASSY -	1	-
2	504596902	STARTER -	1	-
3	537283201	SLEEVE -	1	-
4	540057502	SPRING CASSETTE ASSY -	1	-
5	503212810	SCREW CCRPANT -	2	-
6	504597101	STARTER PULLEY -	1	-
7	503217716	SCREW IHSCT -	1	-
8	505305125	STARTER ROPE -	1	-
9	537232501	STARTER HANDLE -	1	-
10	503217321	SCREW -	4	-
11	504546805	LABEL -	1	-
12	544197102	AIR CONDUCTOR -	1	-
1	505450401	WINTER KIT *Winter kit*	1	-
2	503217016	SCREW CCRPANT *Screw*	2	-
3	503405901	WINTER PLUG *Winter plug*	1	-
1	501388201	CLUTCH COVER ASSY -	0	-
2	735310820	E-CLIP	1	-

Ref.	Article N.	Description	Qty	Kit
		-		
3	537286601	PAWL -	1	-
4	540063301	CHAIN GUIDE -	1	-
5	537017401	BEARING SLEEVE -	1	-
6	503890802	KNEE JOINT ASSY -	1	-
7	505892601	BRAKE SPRING -	1	-
8	503855201	GUIDE BUSHING -	1	-
9	544248501	COVER LID -	1	-
10	503217010	SCREW CCRPANT -	7	-
11	544253101	WEAR PROTECTION -	1	-
12	544306001	BRAKE BAND ASSY -	1	-
13	503892901	PIN -	1	-
14	537397001	WORM SCREW -	1	-
15	537079402	WORM WHEEL -	1	-
16	740480702	O-RING -	1	-
17	503230063	WASHER -	1	-
18	544376801	LABEL -	1	-
19	503220001	HEXAGON NUT -	1	-

WINTER KIT

Q 440 II, 440e II
WINTER KIT

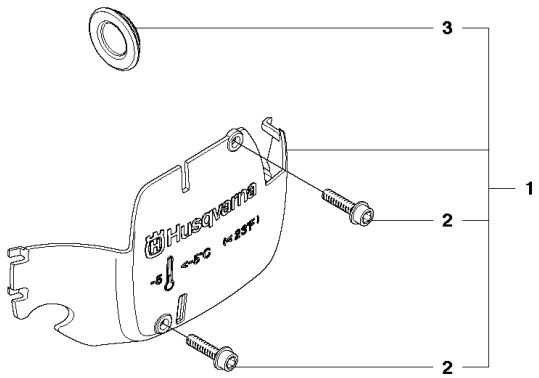

Ref.	Article N.	Description	Qty	Kit
1	501691701	COMBINATION WRENCH -	1	-
1	504724701	INSULATION WALL	1	-
2	504724501	INSULATION WALL	1	-
3	504724401	INSULATION WALL	1	-
4	504201202	INLET PIPE	1	-

Ref.	Article N.	Description	Qty	Kit
5	503200216	SCREW IHSCFM	4	-
6	547727401	CARBURETTOR *Zama Z014-120-0601-F*	1	-
7	544284401	THROTTLE ROD ASSY	1	-
8	544976402	FILTER HOLDER	1	-
9	544392601	SHACKLE	1	-
10	504712501	GUIDE	1	-
11	544844306	CONTROL	1	-
12	544976601	SCREW	1	-
13	503200240	SCREW IHSCFM	3	-
14	544805403	AIR FILTER *Non-Woven - Clear*	1	-
14	599729401	AIR FILTER ASSY *Nylon Mesh - 44 Micron Rating - Black*	1	-
15	503936601	PURGE	1	-
16	544401901	HOSE	1	-
1	547727401	CARBURETTOR *Zama Z014-120-0601-F*	1	-
2	503481101	PIECE	1	-
3	504024001	NOZZLE ASSY	1	-
4	503535601	PLUG WELCH	1	-
5	503479701	VALVE	1	-
6	537020301	SPRING	1	-
7	503665901	LEVER	1	-
8	503480001	PIN RETAINING SCREW	1	-
9	504024101	SCREW	1	-
10	505535201	HUB CAP	1	-
11	504026101	SHAFT ASSY	1	-
12	505110701	COLLAR	1	-
13	504028501	SPRING	1	-
14	504027501	VALVE	1	-
15	503481801	SCREW	2	-
16	504026701	CIRCLIP	2	-
17	504026201	SHAFT ASSY	1	-
18	540053701	LEVER	1	-
19	504028301	SPRING	1	-
20	504026301	LEVER	1	-
21	503479001	SCREW	2	-
22	504027401	VALVE	1	-

Ref.	Article N.	Description	Qty	Kit
23	503481801	SCREW	2	-
24	504026001	SHAFT ASSY	1	-
25	504028401	SPRING	1	-
26	544983101	LEVER	1	-
27	503479001	SCREW	2	-
28	504027601	VALVE	1	-
29	503479201	SCREW	1	-
30	504027301	SCREW	1	-
31	504909201	SCREW	1	-
32	504028101	SCREW	1	-
33	504024301	GASKET	1	-
34	504024501	DIAPHRAGM	1	-
35	504024601	BODY	1	-
36	504028201	SCREW	1	-
37	504025001	STRAINER	1	-
38	504025601	DIAPHRAGM	1	-
39	504025701	GASKET	1	-
40	504025901	COVER	1	-
41	504027801	SCREW	4	-
42	504028601	GASKET KIT	1	-
1	544194905	CLUTCH COVER ASSY *Orange*	1	-
1	544194915	CLUTCH COVER ASSY *Grey*	1	-
2	504542801	COVER LID	1	-
3	544306001	BRAKE BAND ASSY	1	-
4	544253101	WEAR PROTECTION	1	-
5	503855201	GUIDE BUSHING	1	-
6	505892601	BRAKE SPRING	1	-
7	544248501	COVER LID	1	-
8	503890802	KNEE JOINT ASSY	1	-
9	503892901	PIN	1	-
10	735310820	E-CLIP	1	-
11	537392901	SCREW	1	-
12	537347201	GEAR ASSY	1	-
13	537392601	HEAT PROTECTOR	1	-
14	544357501	LABEL	1	-
15	503217010	SCREW CCRPANT	10	-
16	525354301	BEARING SLEEVE	1	-

Ref.	Article N.	Description	Qty	Kit
17	505321001	WEAR PLATE	1	-
18	537347801	KNOB	1	-
1	575568001	CLUTCH ASSY	1	-
2	574718801	CLUTCH SPRING	2	-
3	505441501	CLUTCH DRUM ASSY	1	-
4	503539201	NEEDLE BEARING	1	-
5	536860001	WORM GEAR	1	-
6	540057901	PUMP PISTON	1	-
7	537154801	PUMP CYLINDER	1	-
8	544084202	OIL HOSE	1	-
1	544932507	CRANKCASE ASSY *Orange*	1	-
1	544932508	CRANKCASE ASSY *Grey*	1	-
2	503875802	STIFFENING PLATE	1	-
3	503875402	BAR BOLT	1	-
4	537334601	BAR BOLT	1	-
5	544036401	BAR BOLT	1	-
6	503240905	NEEDLE ROLLER	1	-
7	530026119	CHECK VALVE	1	-
8	537403501	FILTER	1	-
9	544083301	OIL SCREEN	1	-
10	544331601	GUIDE PIN	3	-
11	503869301	SUPPORT	1	-
12	522620003	TANK CAP ASSY	1	-
13	589241101	GASKET	1	-
14	503578901	HOLDER	1	-
15	503886301	PIN	1	-
16	503218876	SCREW IHSCT	2	-
17	501007601	SUPPORT	1	-
18	503215103	SCREW IHSCT	1	-
19	544284601	CHAIN GUIDE PLATE	1	-
20	503217010	SCREW CCRPANT	1	-
21	544286501	SPIKE	1	-
22	503217520	SCREW IHSCFT	2	-
23	544251501	HAND GUARD	1	-
24	503892401	LOCK	1	-
25	503893001	SCREW	2	-
26	503436501	POSITION SPRING	1	-

Ref.	Article N.	Description	Qty	Kit
1	525604601	CRANKSHAFT ASSY -	1	-
2	544248702	BALL BEARING -	1	-
3	544251201	SEALING -	1	-
4	544248802	BALL BEARING -	1	-
5	544251301	SEALING -	1	-
6	503414101	NEEDLE BEARING -	1	-
1	504790201	CYLINDER COVER ASSY	1	-
2	522736001	LABEL	1	-
3	595303001	SNAP LOCKING	3	-
1	504735101	CYLINDER -	1	-
2	502625007	PISTON ASSY -	1	-
3	544405901	PISTON RING -	1	-
4	544406001	PISTON PIN -	1	-
5	737441000	SNAP RING -	2	-
6	503414101	NEEDLE BEARING -	1	-
7	544396001	GASKET -	1	-
8	544395901	GASKET -	1	-
9	725533355	SCREW IHSCM -	4	-
10	503235111	SPARK PLUG -	1	-
11	504794001	GASKET -	1	-
1	544193805	FUEL TANK	1	-
2	503212810	SCREW CCRPANT	1	-
3	720182520	PARALLEL PIN	1	-
4	544968501	THROTTLE CONTROL	1	-
5	544099901	SPRING	1	-

Ref.	Article N.	Description	Qty	Kit
6	579239401	THROTTLE LOCKOUT	1	-
7	531246601	HANDLE INSERT *Grey soft*	1	-
8	544128604	FUEL HOSE	1	-
9	503443201	FUEL FILTER	1	-
10	577535101	RETURN HOSE	1	-
11	522620003	TANK CAP ASSY	1	-
12	589241101	GASKET	1	-
13	503578901	HOLDER	1	-
14	544375001	LABEL	1	-
15	501007601	SUPPORT	1	-
16	504795601	ANTIVIBRATION ELEMENT	2	-
17	721126339	GROOVED PIN	1	-
18	501152901	TANK VENT ASSY	1	-
1	544284001	FRONT HANDLE -	1	-
2	503218876	SCREW IHSCT -	3	-
3	503898301	ANTIVIBRATION ELEMENT -	1	-
1	580279801	FLYWHEEL ASSY -	1	-
2	537245601	STARTER PAWL -	2	-
3	501819903	SCREW -	2	-
4	503230042	WASHER -	2	-
5	529271101	SPRING -	2	-
6	503220401	NUT -	1	-
7	579638804	IGNITION MODULE -	1	-
8	510101401	WIRING ASSY -	1	-
9	503200220	SCREW IHSCFM -	2	-
1	544147702	MUFFLER ASSY -	1	-
2	579753301	SCREEN -	1	-

Ref.	Article N.	Description	Qty	Kit
3	501323101	HEAT DEFLECTOR -	1	-
4	579753101	GASKET -	1	-
5	725536855	SCREW IHSCM -	2	-
6	724128759	SCREW CRPANM -	1	-
7	504794001	GASKET -	1	-
1	504597002	STARTER ASSY -	1	-
2	504596902	STARTER -	1	-
3	537283201	SLEEVE -	1	-
4	540057502	SPRING CASSETTE ASSY -	1	-
5	503212810	SCREW CCRPANT -	2	-
6	504597101	STARTER PULLEY -	1	-
7	503217716	SCREW IHSCT -	1	-
8	505305125	STARTER ROPE -	1	-
9	537232501	STARTER HANDLE -	1	-
10	503217321	SCREW -	4	-
11	504546805	LABEL -	1	-
12	544197102	AIR CONDUCTOR -	1	-
1	505450401	WINTER KIT *Winter kit*	1	-
2	503217016	SCREW CCRPANT *Screw*	2	-
3	503405901	WINTER PLUG *Winter plug*	1	-
1	501388201	CLUTCH COVER ASSY -	0	-
2	735310820	E-CLIP	1	-

Ref.	Article N.	Description	Qty	Kit
		-		
3	537286601	PAWL -	1	-
4	540063301	CHAIN GUIDE -	1	-
5	537017401	BEARING SLEEVE -	1	-
6	503890802	KNEE JOINT ASSY -	1	-
7	505892601	BRAKE SPRING -	1	-
8	503855201	GUIDE BUSHING -	1	-
9	544248501	COVER LID -	1	-
10	503217010	SCREW CCRPANT -	7	-
11	544253101	WEAR PROTECTION -	1	-
12	544306001	BRAKE BAND ASSY -	1	-
13	503892901	PIN -	1	-
14	537397001	WORM SCREW -	1	-
15	537079402	WORM WHEEL -	1	-
16	740480702	O-RING -	1	-
17	503230063	WASHER -	1	-
18	544376801	LABEL -	1	-
19	503220001	HEXAGON NUT -	1	-

CHAIN BRAKE AND CLUTCH COVER

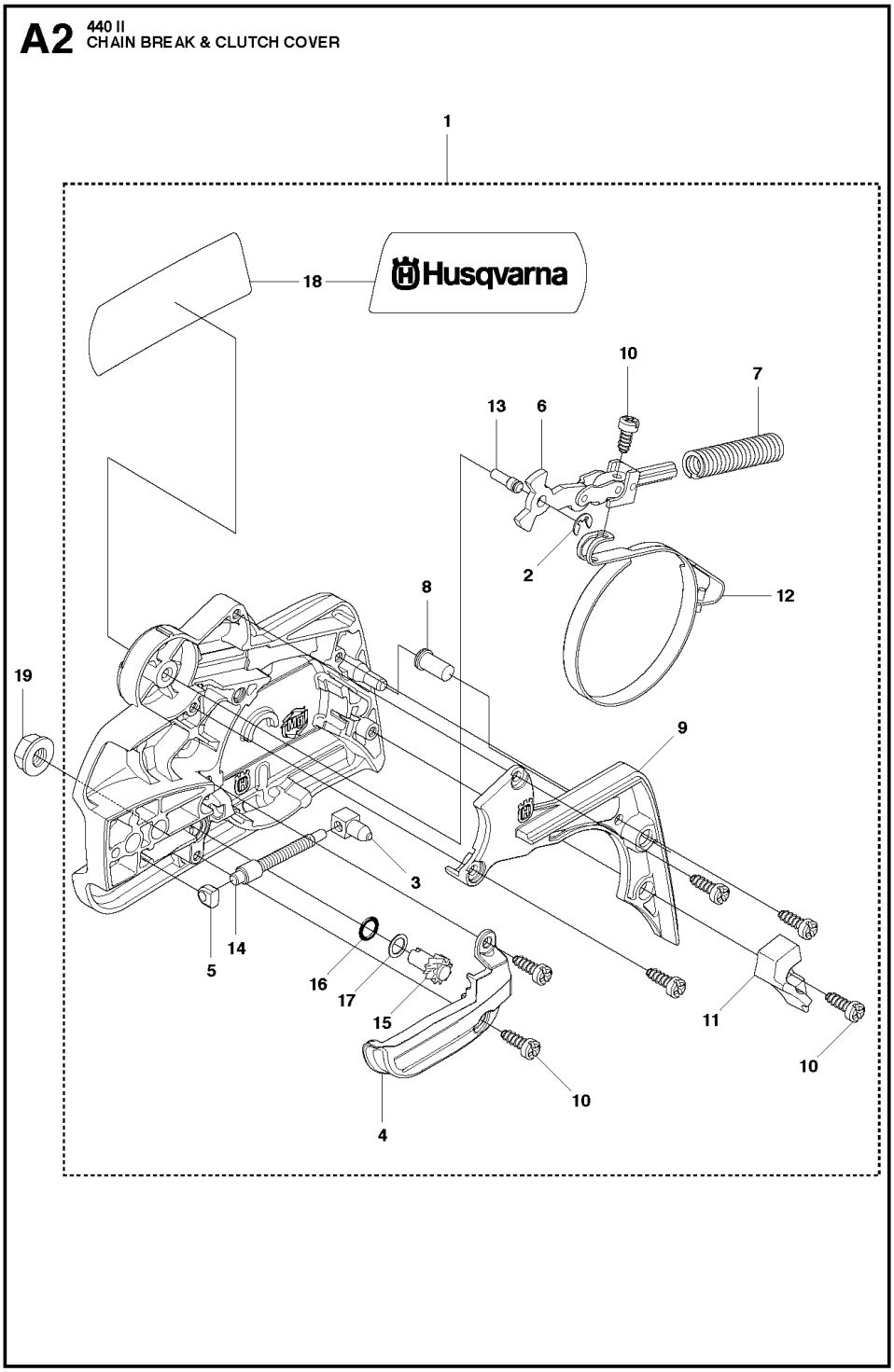

Ref.	Article N.	Description	Qty	Kit
1	501691701	COMBINATION WRENCH -	1	-
1	504724701	INSULATION WALL	1	-
2	504724501	INSULATION WALL	1	-
3	504724401	INSULATION WALL	1	-
4	504201202	INLET PIPE	1	-

Ref.	Article N.	Description	Qty	Kit
5	503200216	SCREW IHSCFM	4	-
6	547727401	CARBURETTOR *Zama Z014-120-0601-F*	1	-
7	544284401	THROTTLE ROD ASSY	1	-
8	544976402	FILTER HOLDER	1	-
9	544392601	SHACKLE	1	-
10	504712501	GUIDE	1	-
11	544844306	CONTROL	1	-
12	544976601	SCREW	1	-
13	503200240	SCREW IHSCFM	3	-
14	544805403	AIR FILTER *Non-Woven - Clear*	1	-
14	599729401	AIR FILTER ASSY *Nylon Mesh - 44 Micron Rating - Black*	1	-
15	503936601	PURGE	1	-
16	544401901	HOSE	1	-
1	547727401	CARBURETTOR *Zama Z014-120-0601-F*	1	-
2	503481101	PIECE	1	-
3	504024001	NOZZLE ASSY	1	-
4	503535601	PLUG WELCH	1	-
5	503479701	VALVE	1	-
6	537020301	SPRING	1	-
7	503665901	LEVER	1	-
8	503480001	PIN RETAINING SCREW	1	-
9	504024101	SCREW	1	-
10	505535201	HUB CAP	1	-
11	504026101	SHAFT ASSY	1	-
12	505110701	COLLAR	1	-
13	504028501	SPRING	1	-
14	504027501	VALVE	1	-
15	503481801	SCREW	2	-
16	504026701	CIRCLIP	2	-
17	504026201	SHAFT ASSY	1	-
18	540053701	LEVER	1	-
19	504028301	SPRING	1	-
20	504026301	LEVER	1	-
21	503479001	SCREW	2	-
22	504027401	VALVE	1	-

Ref.	Article N.	Description	Qty	Kit
23	503481801	SCREW	2	-
24	504026001	SHAFT ASSY	1	-
25	504028401	SPRING	1	-
26	544983101	LEVER	1	-
27	503479001	SCREW	2	-
28	504027601	VALVE	1	-
29	503479201	SCREW	1	-
30	504027301	SCREW	1	-
31	504909201	SCREW	1	-
32	504028101	SCREW	1	-
33	504024301	GASKET	1	-
34	504024501	DIAPHRAGM	1	-
35	504024601	BODY	1	-
36	504028201	SCREW	1	-
37	504025001	STRAINER	1	-
38	504025601	DIAPHRAGM	1	-
39	504025701	GASKET	1	-
40	504025901	COVER	1	-
41	504027801	SCREW	4	-
42	504028601	GASKET KIT	1	-
1	544194905	CLUTCH COVER ASSY *Orange*	1	-
1	544194915	CLUTCH COVER ASSY *Grey*	1	-
2	504542801	COVER LID	1	-
3	544306001	BRAKE BAND ASSY	1	-
4	544253101	WEAR PROTECTION	1	-
5	503855201	GUIDE BUSHING	1	-
6	505892601	BRAKE SPRING	1	-
7	544248501	COVER LID	1	-
8	503890802	KNEE JOINT ASSY	1	-
9	503892901	PIN	1	-
10	735310820	E-CLIP	1	-
11	537392901	SCREW	1	-
12	537347201	GEAR ASSY	1	-
13	537392601	HEAT PROTECTOR	1	-
14	544357501	LABEL	1	-
15	503217010	SCREW CCRPANT	10	-
16	525354301	BEARING SLEEVE	1	-

Ref.	Article N.	Description	Qty	Kit
17	505321001	WEAR PLATE	1	-
18	537347801	KNOB	1	-
1	575568001	CLUTCH ASSY	1	-
2	574718801	CLUTCH SPRING	2	-
3	505441501	CLUTCH DRUM ASSY	1	-
4	503539201	NEEDLE BEARING	1	-
5	536860001	WORM GEAR	1	-
6	540057901	PUMP PISTON	1	-
7	537154801	PUMP CYLINDER	1	-
8	544084202	OIL HOSE	1	-
1	544932507	CRANKCASE ASSY *Orange*	1	-
1	544932508	CRANKCASE ASSY *Grey*	1	-
2	503875802	STIFFENING PLATE	1	-
3	503875402	BAR BOLT	1	-
4	537334601	BAR BOLT	1	-
5	544036401	BAR BOLT	1	-
6	503240905	NEEDLE ROLLER	1	-
7	530026119	CHECK VALVE	1	-
8	537403501	FILTER	1	-
9	544083301	OIL SCREEN	1	-
10	544331601	GUIDE PIN	3	-
11	503869301	SUPPORT	1	-
12	522620003	TANK CAP ASSY	1	-
13	589241101	GASKET	1	-
14	503578901	HOLDER	1	-
15	503886301	PIN	1	-
16	503218876	SCREW IHSCT	2	-
17	501007601	SUPPORT	1	-
18	503215103	SCREW IHSCT	1	-
19	544284601	CHAIN GUIDE PLATE	1	-
20	503217010	SCREW CCRPANT	1	-
21	544286501	SPIKE	1	-
22	503217520	SCREW IHSCFT	2	-
23	544251501	HAND GUARD	1	-
24	503892401	LOCK	1	-
25	503893001	SCREW	2	-
26	503436501	POSITION SPRING	1	-

Ref.	Article N.	Description	Qty	Kit
1	525604601	CRANKSHAFT ASSY -	1	-
2	544248702	BALL BEARING -	1	-
3	544251201	SEALING -	1	-
4	544248802	BALL BEARING -	1	-
5	544251301	SEALING -	1	-
6	503414101	NEEDLE BEARING -	1	-
1	504790201	CYLINDER COVER ASSY	1	-
2	522736001	LABEL	1	-
3	595303001	SNAP LOCKING	3	-
1	504735101	CYLINDER -	1	-
2	502625007	PISTON ASSY -	1	-
3	544405901	PISTON RING -	1	-
4	544406001	PISTON PIN -	1	-
5	737441000	SNAP RING -	2	-
6	503414101	NEEDLE BEARING -	1	-
7	544396001	GASKET -	1	-
8	544395901	GASKET -	1	-
9	725533355	SCREW IHSCM -	4	-
10	503235111	SPARK PLUG -	1	-
11	504794001	GASKET -	1	-
1	544193805	FUEL TANK	1	-
2	503212810	SCREW CCRPANT	1	-
3	720182520	PARALLEL PIN	1	-
4	544968501	THROTTLE CONTROL	1	-
5	544099901	SPRING	1	-

Ref.	Article N.	Description	Qty	Kit
6	579239401	THROTTLE LOCKOUT	1	-
7	531246601	HANDLE INSERT *Grey soft*	1	-
8	544128604	FUEL HOSE	1	-
9	503443201	FUEL FILTER	1	-
10	577535101	RETURN HOSE	1	-
11	522620003	TANK CAP ASSY	1	-
12	589241101	GASKET	1	-
13	503578901	HOLDER	1	-
14	544375001	LABEL	1	-
15	501007601	SUPPORT	1	-
16	504795601	ANTIVIBRATION ELEMENT	2	-
17	721126339	GROOVED PIN	1	-
18	501152901	TANK VENT ASSY	1	-
1	544284001	FRONT HANDLE -	1	-
2	503218876	SCREW IHSCT -	3	-
3	503898301	ANTIVIBRATION ELEMENT -	1	-
1	580279801	FLYWHEEL ASSY -	1	-
2	537245601	STARTER PAWL -	2	-
3	501819903	SCREW -	2	-
4	503230042	WASHER -	2	-
5	529271101	SPRING -	2	-
6	503220401	NUT -	1	-
7	579638804	IGNITION MODULE -	1	-
8	510101401	WIRING ASSY -	1	-
9	503200220	SCREW IHSCFM -	2	-
1	544147702	MUFFLER ASSY -	1	-
2	579753301	SCREEN -	1	-

Ref.	Article N.	Description	Qty	Kit
3	501323101	HEAT DEFLECTOR -	1	-
4	579753101	GASKET -	1	-
5	725536855	SCREW IHSCM -	2	-
6	724128759	SCREW CRPANM -	1	-
7	504794001	GASKET -	1	-
1	504597002	STARTER ASSY -	1	-
2	504596902	STARTER -	1	-
3	537283201	SLEEVE -	1	-
4	540057502	SPRING CASSETTE ASSY -	1	-
5	503212810	SCREW CCRPANT -	2	-
6	504597101	STARTER PULLEY -	1	-
7	503217716	SCREW IHSCT -	1	-
8	505305125	STARTER ROPE -	1	-
9	537232501	STARTER HANDLE -	1	-
10	503217321	SCREW -	4	-
11	504546805	LABEL -	1	-
12	544197102	AIR CONDUCTOR -	1	-
1	505450401	WINTER KIT *Winter kit*	1	-
2	503217016	SCREW CCRPANT *Screw*	2	-
3	503405901	WINTER PLUG *Winter plug*	1	-
1	501388201	CLUTCH COVER ASSY -	0	-
2	735310820	E-CLIP	1	-

Ref.	Article N.	Description	Qty	Kit
		-		
3	537286601	PAWL -	1	-
4	540063301	CHAIN GUIDE -	1	-
5	537017401	BEARING SLEEVE -	1	-
6	503890802	KNEE JOINT ASSY -	1	-
7	505892601	BRAKE SPRING -	1	-
8	503855201	GUIDE BUSHING -	1	-
9	544248501	COVER LID -	1	-
10	503217010	SCREW CCRPANT -	7	-
11	544253101	WEAR PROTECTION -	1	-
12	544306001	BRAKE BAND ASSY -	1	-
13	503892901	PIN -	1	-
14	537397001	WORM SCREW -	1	-
15	537079402	WORM WHEEL -	1	-
16	740480702	O-RING -	1	-
17	503230063	WASHER -	1	-
18	544376801	LABEL -	1	-
19	503220001	HEXAGON NUT -	1	-