ACCESSORIES

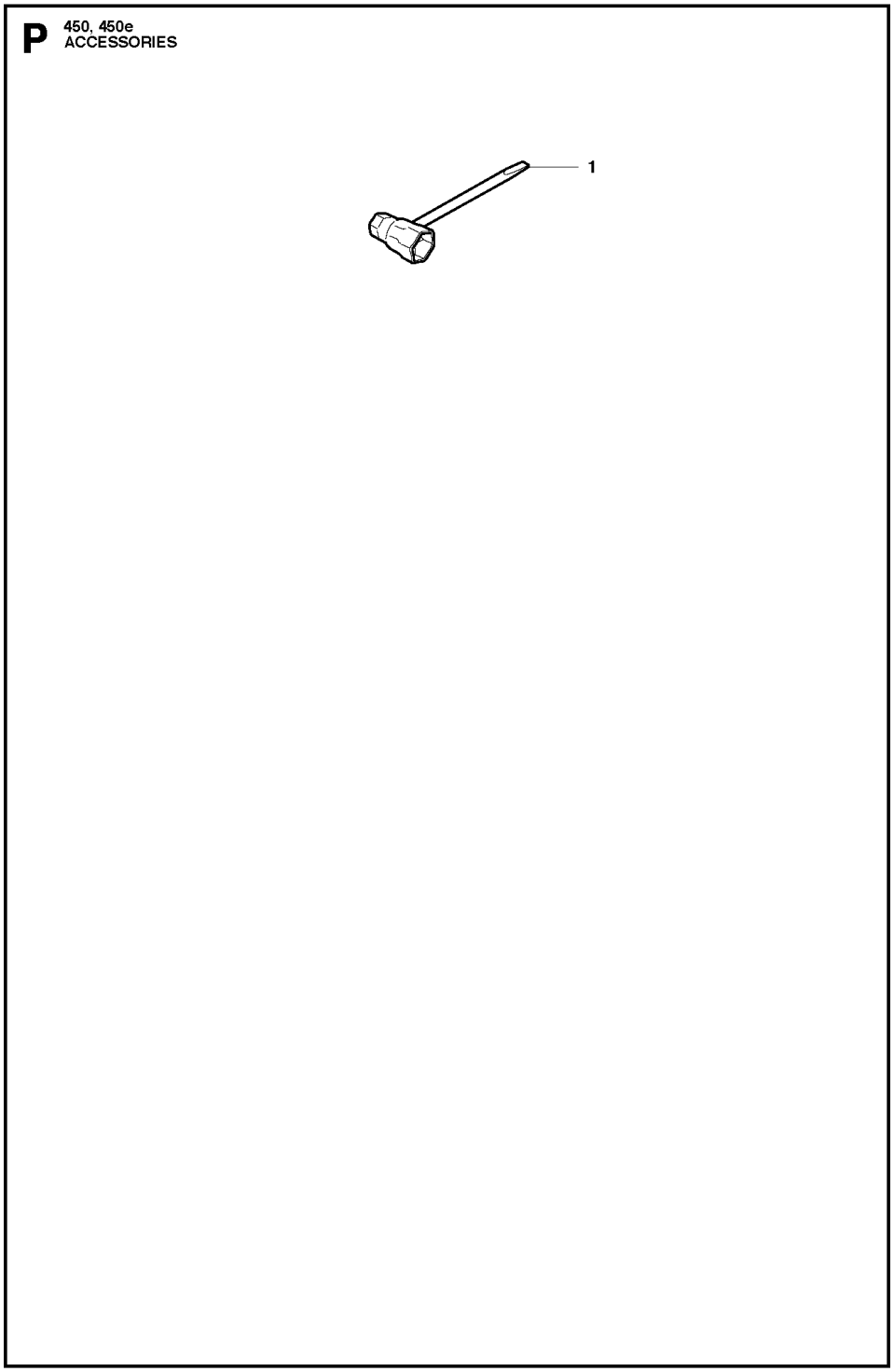

Ref.	Article N.	Description	Qty	Kit
1	501691701	COMBINATION WRENCH -	1	-
1	544082301	PIPE ASSY -	1	-
2	503200216	SCREW IHSCFM -	4	-
3	544083801	INTERMEDATE WALL -	1	-
4	544084001	FLANGE -	1	-
5	503210725	SCREW IHSCFT -	2	-
6	544084101	FLANGE -	1	-
7	544148201	THROTTLE -	1	-
8	506450401	CARBURETTOR *C1M-EL37B*	1	-
9	505514701	FILTER HOLDER ASSY -	1	-
10	544231401	SHACKLE -	1	-
11	503936601	PURGE *air purge*	1	-
12	544401901	HOSE *suction hose*	1	-
13	577535101	RETURN HOSE *return hose*	1	-
14	544359902	CONTROL -	1	-
15	503210750	SCREW IHSCFT -	2	-
16	544080803	AIR FILTER *Felt*	1	-
16	544080802	AIR FILTER *µ 44*	1	-
16	544080801	AIR FILTER *µ 80*	1	-
17	502081001	SHAFT ASSY -	1	-
18	502081101	SPRING -	1	-
19	502080801	COLLAR	1	-

Ref.	Article N.	Description	Qty	Kit
		-		
20	502081201	VALVE -	1	-
21	503481801	SCREW -	1	-
22	537385201	CLIP -	1	-
23	502080901	ROD -	1	-
24	735583000	WASHER -	1	-
1	506450401	CARBURETTOR -	1	-
2	502078201	COLLAR -	1	-
3	502078301	COLLAR -	1	-
4	502078401	SCREW -	1	-
5	502078601	SPRING -	1	-
6	502078701	SPRING -	1	-
7	503479001	SCREW -	1	-
8	503479601	SCREW -	1	-
9	503479701	VALVE -	1	-
10	503480001	PIN RETAINING SCREW -	1	-
11	503480101	SCREW -	1	-
12	503480501	SCREW -	4	-
13	503481101	PIECE -	1	-
14	503481801	SCREW -	2	-
15	503535601	PLUG WELCH -	2	-
16	503535701	STRAINER -	1	-

Ref.	Article N.	Description	Qty	Kit
17	503665901	LEVER -	1	-
18	537020101	GASKET -	1	-
19	537383101	DIAPHRAGM PUMP -	1	-
20	502078901	COVER -	1	-
21	537383301	SCREW -	1	-
22	537383401	SPRING -	1	-
23	537383701	COVER -	1	-
24	544237701	NOZZLE ASSY -	1	-
25	502079001	DIAPHRAGM -	1	-
26	502079101	LEVER -	1	-
27	505101701	LEVER -	1	-
28	502079401	SHAFT ASSY -	1	-
29	502079501	SHAFT ASSY -	1	-
30	502247701	VALVE -	1	-
31	502079801	COLLAR -	1	-
32	537383601	GASKET -	1	-
33	502081701	LEVER -	1	-
34	502079901	SCREW -	1	-
35	502080001	SCREW -	1	-
36	502080101	VALVE -	1	-
37	502080201	GASKET KIT -	1	-
38	544119501	PLUG	1	-

Ref.	Article N.	Description	Qty	Kit
		-		
1	544217205	CLUTCH COVER ASSY *Orange*	1	-
2	504542801	COVER LID	1	-
3	537043001	BRAKE BAND ASSY	1	-
4	544083001	WEAR PROTECTION	1	-
5	503855201	GUIDE BUSHING	1	-
6	503465901	BRAKE SPRING	1	-
7	544082901	COVER LID	1	-
8	503890802	KNEE JOINT ASSY	1	-
9	503892901	PIN	1	-
10	735310820	E-CLIP	1	-
11	537392901	SCREW	1	-
12	537347201	GEAR ASSY	1	-
13	537392601	HEAT PROTECTOR	1	-
14	544357501	LABEL	1	-
15	503217010	SCREW CCRPANT	10	-
16	525354301	BEARING SLEEVE	1	-
17	544250501	WEAR PLATE	1	-
18	537347801	KNOB	1	-
1	537110503	CLUTCH ASSY -	1	-
2	537359101	CLUTCH SPRING -	2	-
3	578097901	CLUTCH DRUM ASSY -	1	-
4	503255201	NEEDLE BEARING -	1	-
5	503931801	WORM WHEEL -	1	-
6	540057901	PUMP PISTON -	1	-
7	537154801	PUMP CYLINDER -	1	-
8	544084202	OIL HOSE -	1	-
1	537438201	CRANKCASE *Orange*	1	-
1	537438205	CRANKCASE *Grey*	1	-
2	503875802	STIFFENING PLATE	1	-

Ref.	Article N.	Description	Qty	Kit
3	503875402	BAR BOLT	1	-
4	537334601	BAR BOLT	1	-
5	544036401	BAR BOLT	1	-
6	503240905	NEEDLE ROLLER	1	-
7	530026119	CHECK VALVE	1	-
8	537403501	FILTER	1	-
9	544083301	OIL SCREEN	1	-
10	544331601	GUIDE PIN	3	-
11	503869301	SUPPORT	2	-
12	544111203	TANK CAP ASSY	1	-
13	589241101	GASKET	1	-
14	503578901	HOLDER	1	-
15	503886301	PIN	1	-
16	503218876	SCREW IHSCT	2	-
17	501007601	SUPPORT	2	-
18	503215103	SCREW IHSCT	1	-
19	544094001	CHAIN GUIDE PLATE	1	-
20	503217010	SCREW CCRPANT	1	-
21	503905901	SPIKE	1	-
22	503217520	SCREW IHSCFT	2	-
23	505422701	HAND GUARD	1	-
24	503892401	LOCK	1	-
25	503893001	SCREW	2	-
26	503436501	POSITION SPRING	1	-
1	525605001	CRANKSHAFT ASSY -	1	-
2	544062001	BEARING -	2	-
3	544013801	SEALING -	2	-
4	503256301	NEEDLE BEARING -	1	-
1	544348303	CYLINDER COVER ASSY	1	-
2	522709201	LABEL	1	-
3	595303001	SNAP LOCKING	3	-
1	544119802	CYLINDER -	1	-
2	544088905	PISTON ASSY -	1	-
3	544088701	PISTON RING	1	-

Ref.	Article N.	Description	Qty	Kit
		-		
4	544211301	CIRCLIP -	1	-
5	503256301	NEEDLE BEARING -	1	-
6	544108701	GASKET -	1	-
7	544109201	GASKET -	1	-
8	503200527	SCREW IHSCM -	4	-
9	544870701	DECOMPRESSION VALVE -	1	-
10	503235111	SPARK PLUG -	1	-
11	540057301	SUPPORT -	1	-
12	503552201	PLUG -	1	-
13	544972001	GASKET KIT *Set of Gaskets*	1	-
1	537437906	FUEL TANK ASSY	1	-
2	503212810	SCREW CCRPANT	1	-
3	720182520	PARALLEL PIN	1	-
4	544099701	THROTTLE TRIGGER	1	-
5	544099901	SPRING	1	-
6	544099801	THROTTLE LOCKOUT	1	-
7	531246501	HANDLE INSERT *Grey soft*	1	-
8	504098801	THROTTLE CABLE ASSY	1	-
9	544128601	FUEL HOSE	1	-
10	503443201	FUEL FILTER	1	-
11	544129701	RETURN HOSE	1	-
12	544111203	TANK CAP ASSY	1	-
13	589241101	GASKET	1	-
14	503578901	HOLDER	1	-
15	544375001	LABEL	1	-
16	501007601	SUPPORT	1	-
17	544101201	ANTIVIBRATION ELEMENT	2	-
18	721126339	GROOVED PIN	1	-
19	501152901	TANK VENT ASSY	1	-

Ref.	Article N.	Description	Qty	Kit
1	544083901	FRONT HANDLE -	1	-
2	503218876	SCREW IHSCT -	3	-
3	503210270	SCREW IHSCT -	2	-
4	503898301	ANTIVIBRATION ELEMENT -	1	-
1	544111801	FLYWHEEL ASSY -	1	-
2	537245601	STARTER PAWL -	2	-
3	501819903	SCREW -	2	-
4	503230042	WASHER -	2	-
5	529271101	SPRING -	2	-
6	503220401	NUT -	1	-
7	573935702	IGNITION MODULE -	1	-
8	510101501	WIRING ASSY -	1	-
9	503200220	SCREW IHSCFM -	2	-
1	544147702	MUFFLER ASSY -	1	-
2	579753301	SCREEN -	1	-
3	579753201	HEAT DEFLECTOR -	1	-
4	579753101	GASKET -	1	-
5	725536855	SCREW IHSCM -	2	-
6	724128759	SCREW CRPANM -	1	-
7	544972001	GASKET KIT *Set of Gaskets*	1	-
3	544464502	WINTER KIT *Winter kit*	1	-
4	503217016	SCREW CCRPANT	2	-

Ref.	Article N.	Description	Qty	Kit
		-		
1	544158502	STARTER ASSY -	1	-
2	544158401	STARTER HOUSING -	1	-
3	537283201	SLEEVE -	1	-
4	540057502	SPRING CASSETTE ASSY -	1	-
5	503212810	SCREW CCRPANT -	2	-
6	537423201	STARTER PULLEY -	1	-
7	537423401	SPRING -	1	-
8	537423301	DRIVER -	1	-
9	537426601	SCREW -	1	-
10	505305125	STARTER ROPE -	1	-
11	537232501	STARTER HANDLE -	1	-
12	503217321	SCREW -	4	-
13	544081501	COOLING AIR CONDUCTER -	1	-
14	544377102	LABEL -	1	-

CARBURETOR AND AIR FILTER

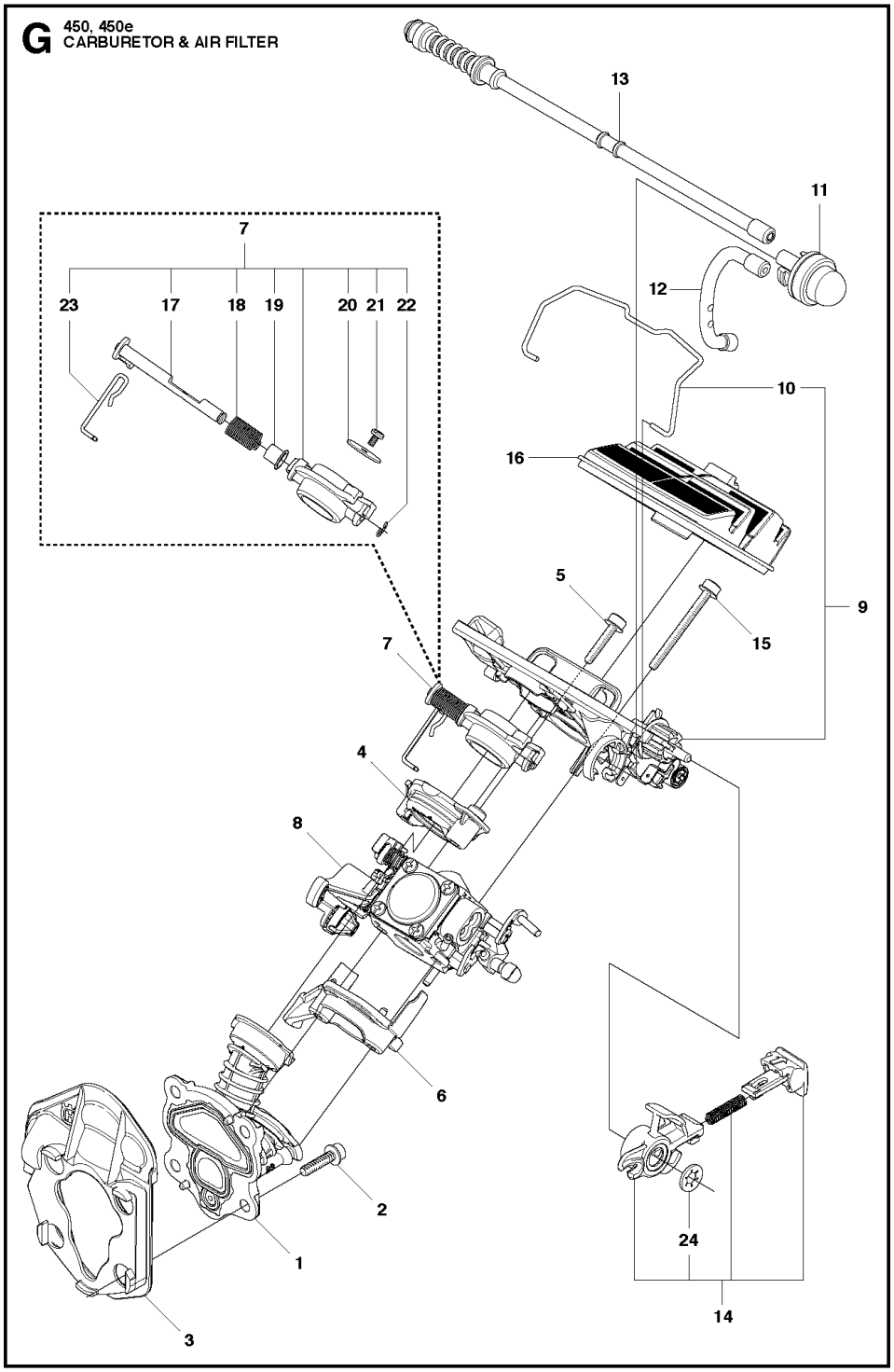

Ref.	Article N.	Description	Qty	Kit
1	501691701	COMBINATION WRENCH -	1	-
1	544082301	PIPE ASSY -	1	-
2	503200216	SCREW IHSCFM -	4	-

Ref.	Article N.	Description	Qty	Kit
3	544083801	INTERMEDATE WALL -	1	-
4	544084001	FLANGE -	1	-
5	503210725	SCREW IHSCFT -	2	-
6	544084101	FLANGE -	1	-
7	544148201	THROTTLE -	1	-
8	506450401	CARBURETTOR *C1M-EL37B*	1	-
9	505514701	FILTER HOLDER ASSY -	1	-
10	544231401	SHACKLE -	1	-
11	503936601	PURGE *air purge*	1	-
12	544401901	HOSE *suction hose*	1	-
13	577535101	RETURN HOSE *return hose*	1	-
14	544359902	CONTROL -	1	-
15	503210750	SCREW IHSCFT -	2	-
16	544080803	AIR FILTER *Felt*	1	-
16	544080802	AIR FILTER *µ 44*	1	-
16	544080801	AIR FILTER *µ 80*	1	-
17	502081001	SHAFT ASSY -	1	-
18	502081101	SPRING -	1	-
19	502080801	COLLAR -	1	-
20	502081201	VALVE -	1	-
21	503481801	SCREW -	1	-
22	537385201	CLIP	1	-

Ref.	Article N.	Description	Qty	Kit
		-		
23	502080901	ROD -	1	-
24	735583000	WASHER -	1	-
1	506450401	CARBURETTOR -	1	-
2	502078201	COLLAR -	1	-
3	502078301	COLLAR -	1	-
4	502078401	SCREW -	1	-
5	502078601	SPRING -	1	-
6	502078701	SPRING -	1	-
7	503479001	SCREW -	1	-
8	503479601	SCREW -	1	-
9	503479701	VALVE -	1	-
10	503480001	PIN RETAINING SCREW -	1	-
11	503480101	SCREW -	1	-
12	503480501	SCREW -	4	-
13	503481101	PIECE -	1	-
14	503481801	SCREW -	2	-
15	503535601	PLUG WELCH -	2	-
16	503535701	STRAINER -	1	-
17	503665901	LEVER -	1	-
18	537020101	GASKET -	1	-
19	537383101	DIAPHRAGM PUMP -	1	-

Ref.	Article N.	Description	Qty	Kit
20	502078901	COVER -	1	-
21	537383301	SCREW -	1	-
22	537383401	SPRING -	1	-
23	537383701	COVER -	1	-
24	544237701	NOZZLE ASSY -	1	-
25	502079001	DIAPHRAGM -	1	-
26	502079101	LEVER -	1	-
27	505101701	LEVER -	1	-
28	502079401	SHAFT ASSY -	1	-
29	502079501	SHAFT ASSY -	1	-
30	502247701	VALVE -	1	-
31	502079801	COLLAR -	1	-
32	537383601	GASKET -	1	-
33	502081701	LEVER -	1	-
34	502079901	SCREW -	1	-
35	502080001	SCREW -	1	-
36	502080101	VALVE -	1	-
37	502080201	GASKET KIT -	1	-
38	544119501	PLUG -	1	-
1	544217205	CLUTCH COVER ASSY *Orange*	1	-
2	504542801	COVER LID	1	-
3	537043001	BRAKE BAND ASSY	1	-
4	544083001	WEAR PROTECTION	1	-

Ref.	Article N.	Description	Qty	Kit
5	503855201	GUIDE BUSHING	1	-
6	503465901	BRAKE SPRING	1	-
7	544082901	COVER LID	1	-
8	503890802	KNEE JOINT ASSY	1	-
9	503892901	PIN	1	-
10	735310820	E-CLIP	1	-
11	537392901	SCREW	1	-
12	537347201	GEAR ASSY	1	-
13	537392601	HEAT PROTECTOR	1	-
14	544357501	LABEL	1	-
15	503217010	SCREW CCRPANT	10	-
16	525354301	BEARING SLEEVE	1	-
17	544250501	WEAR PLATE	1	-
18	537347801	KNOB	1	-
1	537110503	CLUTCH ASSY -	1	-
2	537359101	CLUTCH SPRING -	2	-
3	578097901	CLUTCH DRUM ASSY -	1	-
4	503255201	NEEDLE BEARING -	1	-
5	503931801	WORM WHEEL -	1	-
6	540057901	PUMP PISTON -	1	-
7	537154801	PUMP CYLINDER -	1	-
8	544084202	OIL HOSE -	1	-
1	537438201	CRANKCASE *Orange*	1	-
1	537438205	CRANKCASE *Grey*	1	-
2	503875802	STIFFENING PLATE	1	-
3	503875402	BAR BOLT	1	-
4	537334601	BAR BOLT	1	-
5	544036401	BAR BOLT	1	-
6	503240905	NEEDLE ROLLER	1	-
7	530026119	CHECK VALVE	1	-
8	537403501	FILTER	1	-

Ref.	Article N.	Description	Qty	Kit
9	544083301	OIL SCREEN	1	-
10	544331601	GUIDE PIN	3	-
11	503869301	SUPPORT	2	-
12	544111203	TANK CAP ASSY	1	-
13	589241101	GASKET	1	-
14	503578901	HOLDER	1	-
15	503886301	PIN	1	-
16	503218876	SCREW IHSCT	2	-
17	501007601	SUPPORT	2	-
18	503215103	SCREW IHSCT	1	-
19	544094001	CHAIN GUIDE PLATE	1	-
20	503217010	SCREW CCRPANT	1	-
21	503905901	SPIKE	1	-
22	503217520	SCREW IHSCFT	2	-
23	505422701	HAND GUARD	1	-
24	503892401	LOCK	1	-
25	503893001	SCREW	2	-
26	503436501	POSITION SPRING	1	-
1	525605001	CRANKSHAFT ASSY -	1	-
2	544062001	BEARING -	2	-
3	544013801	SEALING -	2	-
4	503256301	NEEDLE BEARING -	1	-
1	544348303	CYLINDER COVER ASSY	1	-
2	522709201	LABEL	1	-
3	595303001	SNAP LOCKING	3	-
1	544119802	CYLINDER -	1	-
2	544088905	PISTON ASSY -	1	-
3	544088701	PISTON RING -	1	-
4	544211301	CIRCLIP -	1	-
5	503256301	NEEDLE BEARING -	1	-
6	544108701	GASKET -	1	-

Ref.	Article N.	Description	Qty	Kit
7	544109201	GASKET -	1	-
8	503200527	SCREW IHSCM -	4	-
9	544870701	DECOMPRESSION VALVE -	1	-
10	503235111	SPARK PLUG -	1	-
11	540057301	SUPPORT -	1	-
12	503552201	PLUG -	1	-
13	544972001	GASKET KIT *Set of Gaskets*	1	-
1	537437906	FUEL TANK ASSY	1	-
2	503212810	SCREW CCRPANT	1	-
3	720182520	PARALLEL PIN	1	-
4	544099701	THROTTLE TRIGGER	1	-
5	544099901	SPRING	1	-
6	544099801	THROTTLE LOCKOUT	1	-
7	531246501	HANDLE INSERT *Grey soft*	1	-
8	504098801	THROTTLE CABLE ASSY	1	-
9	544128601	FUEL HOSE	1	-
10	503443201	FUEL FILTER	1	-
11	544129701	RETURN HOSE	1	-
12	544111203	TANK CAP ASSY	1	-
13	589241101	GASKET	1	-
14	503578901	HOLDER	1	-
15	544375001	LABEL	1	-
16	501007601	SUPPORT	1	-
17	544101201	ANTIVIBRATION ELEMENT	2	-
18	721126339	GROOVED PIN	1	-
19	501152901	TANK VENT ASSY	1	-
1	544083901	FRONT HANDLE -	1	-
2	503218876	SCREW IHSCT -	3	-
3	503210270	SCREW IHSCT -	2	-
4	503898301	ANTIVIBRATION ELEMENT	1	-

Ref.	Article N.	Description	Qty	Kit
		-		
1	544111801	FLYWHEEL ASSY -	1	-
2	537245601	STARTER PAWL -	2	-
3	501819903	SCREW -	2	-
4	503230042	WASHER -	2	-
5	529271101	SPRING -	2	-
6	503220401	NUT -	1	-
7	573935702	IGNITION MODULE -	1	-
8	510101501	WIRING ASSY -	1	-
9	503200220	SCREW IHSCFM -	2	-
1	544147702	MUFFLER ASSY -	1	-
2	579753301	SCREEN -	1	-
3	579753201	HEAT DEFLECTOR -	1	-
4	579753101	GASKET -	1	-
5	725536855	SCREW IHSCM -	2	-
6	724128759	SCREW CRPANM -	1	-
7	544972001	GASKET KIT *Set of Gaskets*	1	-
3	544464502	WINTER KIT *Winter kit*	1	-
4	503217016	SCREW CCRPANT -	2	-
1	544158502	STARTER ASSY -	1	-
2	544158401	STARTER HOUSING -	1	-
3	537283201	SLEEVE -	1	-

Ref.	Article N.	Description	Qty	Kit
4	540057502	SPRING CASSETTE ASSY -	1	-
5	503212810	SCREW CCRPANT -	2	-
6	537423201	STARTER PULLEY -	1	-
7	537423401	SPRING -	1	-
8	537423301	DRIVER -	1	-
9	537426601	SCREW -	1	-
10	505305125	STARTER ROPE -	1	-
11	537232501	STARTER HANDLE -	1	-
12	503217321	SCREW -	4	-
13	544081501	COOLING AIR CONDUCTER -	1	-
14	544377102	LABEL -	1	-

CARBURETOR

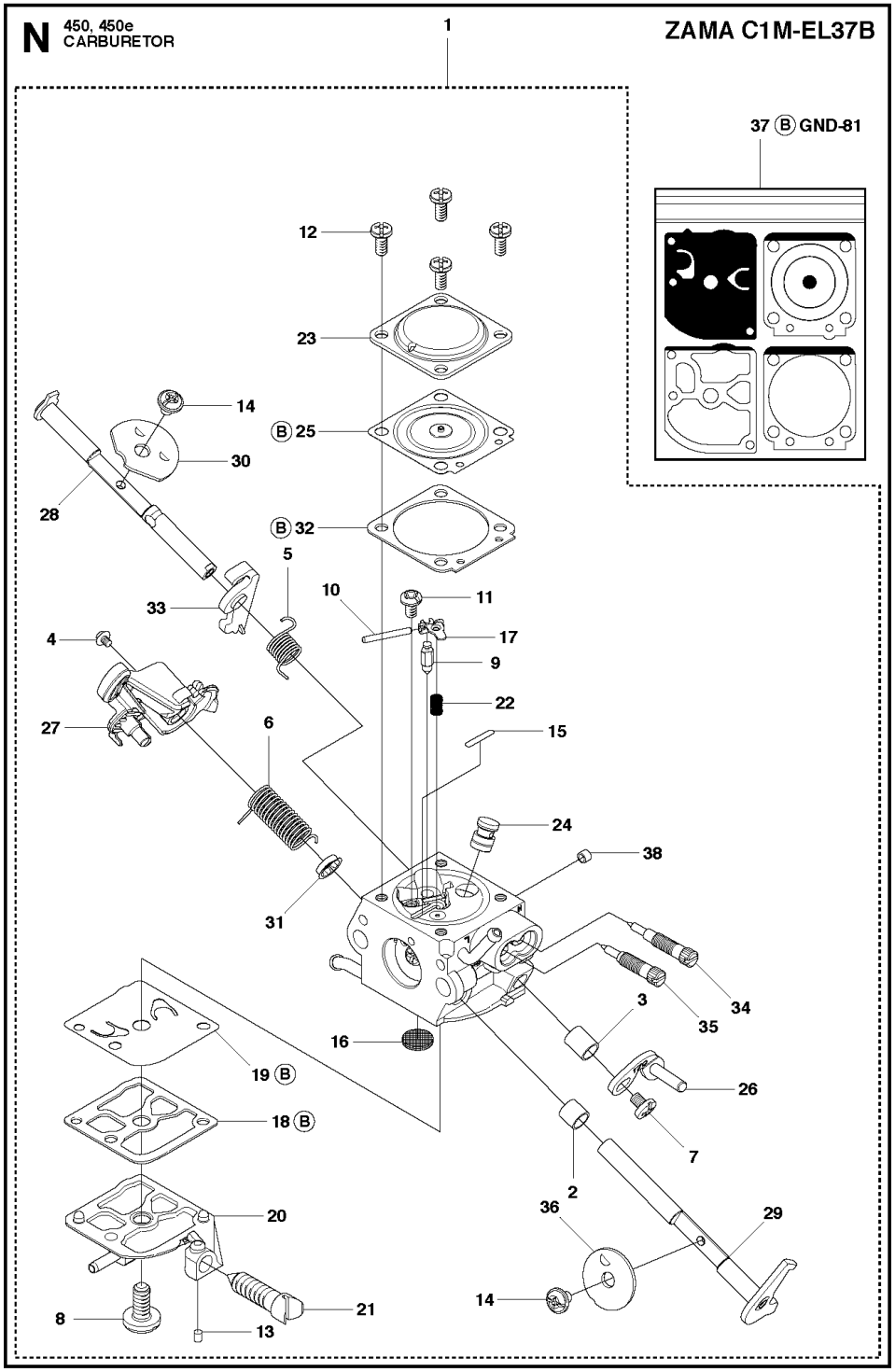

Ref.	Article N.	Description	Qty	Kit
1	501691701	COMBINATION WRENCH -	1	-
1	544082301	PIPE ASSY -	1	-
2	503200216	SCREW IHSCFM -	4	-

Ref.	Article N.	Description	Qty	Kit
3	544083801	INTERMEDATE WALL -	1	-
4	544084001	FLANGE -	1	-
5	503210725	SCREW IHSCFT -	2	-
6	544084101	FLANGE -	1	-
7	544148201	THROTTLE -	1	-
8	506450401	CARBURETTOR *C1M-EL37B*	1	-
9	505514701	FILTER HOLDER ASSY -	1	-
10	544231401	SHACKLE -	1	-
11	503936601	PURGE *air purge*	1	-
12	544401901	HOSE *suction hose*	1	-
13	577535101	RETURN HOSE *return hose*	1	-
14	544359902	CONTROL -	1	-
15	503210750	SCREW IHSCFT -	2	-
16	544080803	AIR FILTER *Felt*	1	-
16	544080802	AIR FILTER *µ 44*	1	-
16	544080801	AIR FILTER *µ 80*	1	-
17	502081001	SHAFT ASSY -	1	-
18	502081101	SPRING -	1	-
19	502080801	COLLAR -	1	-
20	502081201	VALVE -	1	-
21	503481801	SCREW -	1	-
22	537385201	CLIP	1	-

Ref.	Article N.	Description	Qty	Kit
		-		
23	502080901	ROD -	1	-
24	735583000	WASHER -	1	-
1	506450401	CARBURETTOR -	1	-
2	502078201	COLLAR -	1	-
3	502078301	COLLAR -	1	-
4	502078401	SCREW -	1	-
5	502078601	SPRING -	1	-
6	502078701	SPRING -	1	-
7	503479001	SCREW -	1	-
8	503479601	SCREW -	1	-
9	503479701	VALVE -	1	-
10	503480001	PIN RETAINING SCREW -	1	-
11	503480101	SCREW -	1	-
12	503480501	SCREW -	4	-
13	503481101	PIECE -	1	-
14	503481801	SCREW -	2	-
15	503535601	PLUG WELCH -	2	-
16	503535701	STRAINER -	1	-
17	503665901	LEVER -	1	-
18	537020101	GASKET -	1	-
19	537383101	DIAPHRAGM PUMP -	1	-

Ref.	Article N.	Description	Qty	Kit
20	502078901	COVER -	1	-
21	537383301	SCREW -	1	-
22	537383401	SPRING -	1	-
23	537383701	COVER -	1	-
24	544237701	NOZZLE ASSY -	1	-
25	502079001	DIAPHRAGM -	1	-
26	502079101	LEVER -	1	-
27	505101701	LEVER -	1	-
28	502079401	SHAFT ASSY -	1	-
29	502079501	SHAFT ASSY -	1	-
30	502247701	VALVE -	1	-
31	502079801	COLLAR -	1	-
32	537383601	GASKET -	1	-
33	502081701	LEVER -	1	-
34	502079901	SCREW -	1	-
35	502080001	SCREW -	1	-
36	502080101	VALVE -	1	-
37	502080201	GASKET KIT -	1	-
38	544119501	PLUG -	1	-
1	544217205	CLUTCH COVER ASSY *Orange*	1	-
2	504542801	COVER LID	1	-
3	537043001	BRAKE BAND ASSY	1	-
4	544083001	WEAR PROTECTION	1	-

Ref.	Article N.	Description	Qty	Kit
5	503855201	GUIDE BUSHING	1	-
6	503465901	BRAKE SPRING	1	-
7	544082901	COVER LID	1	-
8	503890802	KNEE JOINT ASSY	1	-
9	503892901	PIN	1	-
10	735310820	E-CLIP	1	-
11	537392901	SCREW	1	-
12	537347201	GEAR ASSY	1	-
13	537392601	HEAT PROTECTOR	1	-
14	544357501	LABEL	1	-
15	503217010	SCREW CCRPANT	10	-
16	525354301	BEARING SLEEVE	1	-
17	544250501	WEAR PLATE	1	-
18	537347801	KNOB	1	-
1	537110503	CLUTCH ASSY -	1	-
2	537359101	CLUTCH SPRING -	2	-
3	578097901	CLUTCH DRUM ASSY -	1	-
4	503255201	NEEDLE BEARING -	1	-
5	503931801	WORM WHEEL -	1	-
6	540057901	PUMP PISTON -	1	-
7	537154801	PUMP CYLINDER -	1	-
8	544084202	OIL HOSE -	1	-
1	537438201	CRANKCASE *Orange*	1	-
1	537438205	CRANKCASE *Grey*	1	-
2	503875802	STIFFENING PLATE	1	-
3	503875402	BAR BOLT	1	-
4	537334601	BAR BOLT	1	-
5	544036401	BAR BOLT	1	-
6	503240905	NEEDLE ROLLER	1	-
7	530026119	CHECK VALVE	1	-
8	537403501	FILTER	1	-

Ref.	Article N.	Description	Qty	Kit
9	544083301	OIL SCREEN	1	-
10	544331601	GUIDE PIN	3	-
11	503869301	SUPPORT	2	-
12	544111203	TANK CAP ASSY	1	-
13	589241101	GASKET	1	-
14	503578901	HOLDER	1	-
15	503886301	PIN	1	-
16	503218876	SCREW IHSCT	2	-
17	501007601	SUPPORT	2	-
18	503215103	SCREW IHSCT	1	-
19	544094001	CHAIN GUIDE PLATE	1	-
20	503217010	SCREW CCRPANT	1	-
21	503905901	SPIKE	1	-
22	503217520	SCREW IHSCFT	2	-
23	505422701	HAND GUARD	1	-
24	503892401	LOCK	1	-
25	503893001	SCREW	2	-
26	503436501	POSITION SPRING	1	-
1	525605001	CRANKSHAFT ASSY -	1	-
2	544062001	BEARING -	2	-
3	544013801	SEALING -	2	-
4	503256301	NEEDLE BEARING -	1	-
1	544348303	CYLINDER COVER ASSY	1	-
2	522709201	LABEL	1	-
3	595303001	SNAP LOCKING	3	-
1	544119802	CYLINDER -	1	-
2	544088905	PISTON ASSY -	1	-
3	544088701	PISTON RING -	1	-
4	544211301	CIRCLIP -	1	-
5	503256301	NEEDLE BEARING -	1	-
6	544108701	GASKET -	1	-

Ref.	Article N.	Description	Qty	Kit
7	544109201	GASKET -	1	-
8	503200527	SCREW IHSCM -	4	-
9	544870701	DECOMPRESSION VALVE -	1	-
10	503235111	SPARK PLUG -	1	-
11	540057301	SUPPORT -	1	-
12	503552201	PLUG -	1	-
13	544972001	GASKET KIT *Set of Gaskets*	1	-
1	537437906	FUEL TANK ASSY	1	-
2	503212810	SCREW CCRPANT	1	-
3	720182520	PARALLEL PIN	1	-
4	544099701	THROTTLE TRIGGER	1	-
5	544099901	SPRING	1	-
6	544099801	THROTTLE LOCKOUT	1	-
7	531246501	HANDLE INSERT *Grey soft*	1	-
8	504098801	THROTTLE CABLE ASSY	1	-
9	544128601	FUEL HOSE	1	-
10	503443201	FUEL FILTER	1	-
11	544129701	RETURN HOSE	1	-
12	544111203	TANK CAP ASSY	1	-
13	589241101	GASKET	1	-
14	503578901	HOLDER	1	-
15	544375001	LABEL	1	-
16	501007601	SUPPORT	1	-
17	544101201	ANTIVIBRATION ELEMENT	2	-
18	721126339	GROOVED PIN	1	-
19	501152901	TANK VENT ASSY	1	-
1	544083901	FRONT HANDLE -	1	-
2	503218876	SCREW IHSCT -	3	-
3	503210270	SCREW IHSCT -	2	-
4	503898301	ANTIVIBRATION ELEMENT	1	-

Ref.	Article N.	Description	Qty	Kit
		-		
1	544111801	FLYWHEEL ASSY -	1	-
2	537245601	STARTER PAWL -	2	-
3	501819903	SCREW -	2	-
4	503230042	WASHER -	2	-
5	529271101	SPRING -	2	-
6	503220401	NUT -	1	-
7	573935702	IGNITION MODULE -	1	-
8	510101501	WIRING ASSY -	1	-
9	503200220	SCREW IHSCFM -	2	-
1	544147702	MUFFLER ASSY -	1	-
2	579753301	SCREEN -	1	-
3	579753201	HEAT DEFLECTOR -	1	-
4	579753101	GASKET -	1	-
5	725536855	SCREW IHSCM -	2	-
6	724128759	SCREW CRPANM -	1	-
7	544972001	GASKET KIT *Set of Gaskets*	1	-
3	544464502	WINTER KIT *Winter kit*	1	-
4	503217016	SCREW CCRPANT -	2	-
1	544158502	STARTER ASSY -	1	-
2	544158401	STARTER HOUSING -	1	-
3	537283201	SLEEVE -	1	-

Ref.	Article N.	Description	Qty	Kit
4	540057502	SPRING CASSETTE ASSY -	1	-
5	503212810	SCREW CCRPANT -	2	-
6	537423201	STARTER PULLEY -	1	-
7	537423401	SPRING -	1	-
8	537423301	DRIVER -	1	-
9	537426601	SCREW -	1	-
10	505305125	STARTER ROPE -	1	-
11	537232501	STARTER HANDLE -	1	-
12	503217321	SCREW -	4	-
13	544081501	COOLING AIR CONDUCTER -	1	-
14	544377102	LABEL -	1	-

CHAIN BRAKE AND CLUTCH COVER

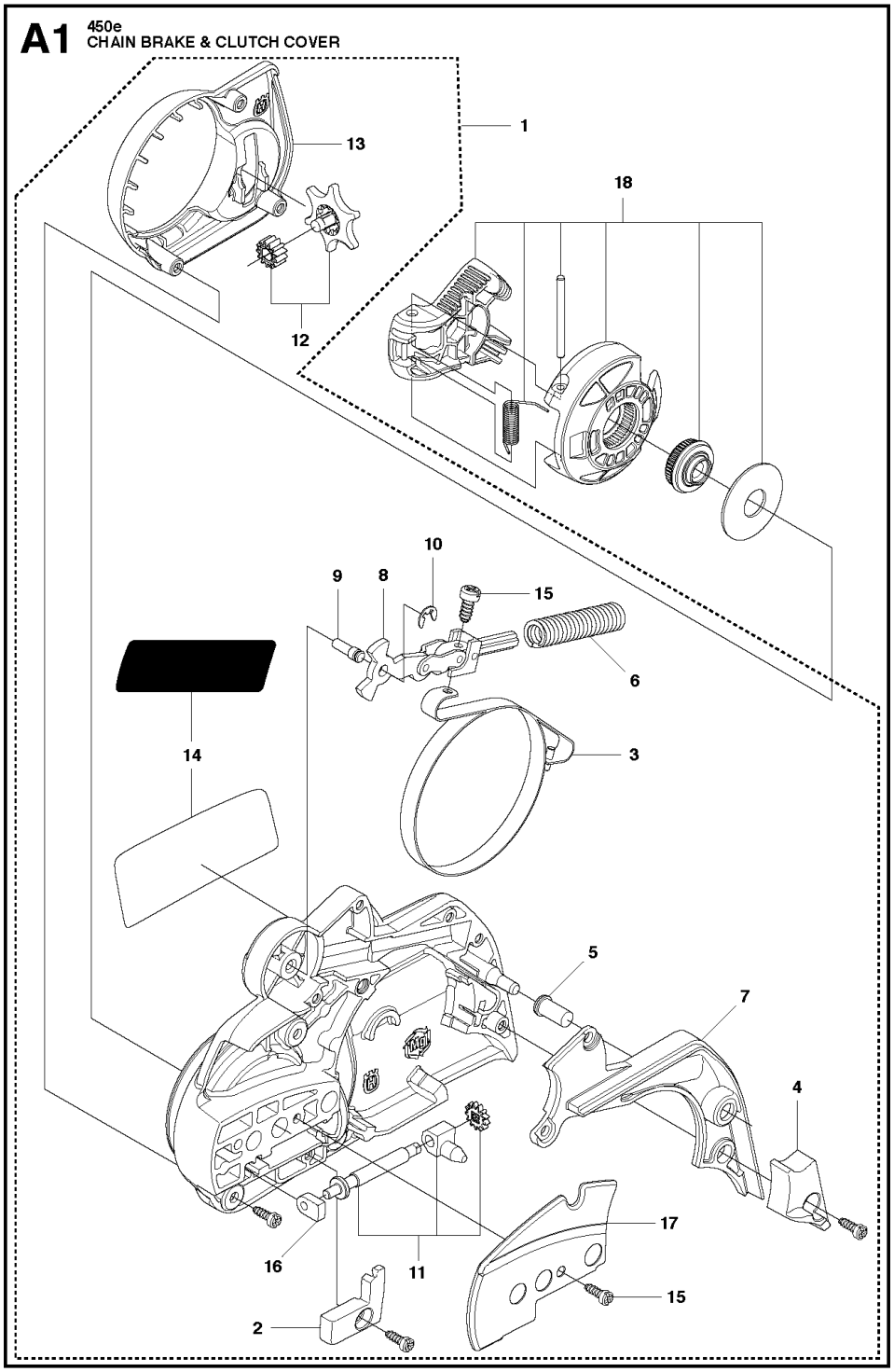

Ref.	Article N.	Description	Qty	Kit
1	501691701	COMBINATION WRENCH -	1	-
1	544082301	PIPE ASSY -	1	-
2	503200216	SCREW IHSCFM -	4	-

Ref.	Article N.	Description	Qty	Kit
3	544083801	INTERMEDATE WALL -	1	-
4	544084001	FLANGE -	1	-
5	503210725	SCREW IHSCFT -	2	-
6	544084101	FLANGE -	1	-
7	544148201	THROTTLE -	1	-
8	506450401	CARBURETTOR *C1M-EL37B*	1	-
9	505514701	FILTER HOLDER ASSY -	1	-
10	544231401	SHACKLE -	1	-
11	503936601	PURGE *air purge*	1	-
12	544401901	HOSE *suction hose*	1	-
13	577535101	RETURN HOSE *return hose*	1	-
14	544359902	CONTROL -	1	-
15	503210750	SCREW IHSCFT -	2	-
16	544080803	AIR FILTER *Felt*	1	-
16	544080802	AIR FILTER *µ 44*	1	-
16	544080801	AIR FILTER *µ 80*	1	-
17	502081001	SHAFT ASSY -	1	-
18	502081101	SPRING -	1	-
19	502080801	COLLAR -	1	-
20	502081201	VALVE -	1	-
21	503481801	SCREW -	1	-
22	537385201	CLIP	1	-

Ref.	Article N.	Description	Qty	Kit
		-		
23	502080901	ROD -	1	-
24	735583000	WASHER -	1	-
1	506450401	CARBURETTOR -	1	-
2	502078201	COLLAR -	1	-
3	502078301	COLLAR -	1	-
4	502078401	SCREW -	1	-
5	502078601	SPRING -	1	-
6	502078701	SPRING -	1	-
7	503479001	SCREW -	1	-
8	503479601	SCREW -	1	-
9	503479701	VALVE -	1	-
10	503480001	PIN RETAINING SCREW -	1	-
11	503480101	SCREW -	1	-
12	503480501	SCREW -	4	-
13	503481101	PIECE -	1	-
14	503481801	SCREW -	2	-
15	503535601	PLUG WELCH -	2	-
16	503535701	STRAINER -	1	-
17	503665901	LEVER -	1	-
18	537020101	GASKET -	1	-
19	537383101	DIAPHRAGM PUMP -	1	-

Ref.	Article N.	Description	Qty	Kit
20	502078901	COVER -	1	-
21	537383301	SCREW -	1	-
22	537383401	SPRING -	1	-
23	537383701	COVER -	1	-
24	544237701	NOZZLE ASSY -	1	-
25	502079001	DIAPHRAGM -	1	-
26	502079101	LEVER -	1	-
27	505101701	LEVER -	1	-
28	502079401	SHAFT ASSY -	1	-
29	502079501	SHAFT ASSY -	1	-
30	502247701	VALVE -	1	-
31	502079801	COLLAR -	1	-
32	537383601	GASKET -	1	-
33	502081701	LEVER -	1	-
34	502079901	SCREW -	1	-
35	502080001	SCREW -	1	-
36	502080101	VALVE -	1	-
37	502080201	GASKET KIT -	1	-
38	544119501	PLUG -	1	-
1	544217205	CLUTCH COVER ASSY *Orange*	1	-
2	504542801	COVER LID	1	-
3	537043001	BRAKE BAND ASSY	1	-
4	544083001	WEAR PROTECTION	1	-

Ref.	Article N.	Description	Qty	Kit
5	503855201	GUIDE BUSHING	1	-
6	503465901	BRAKE SPRING	1	-
7	544082901	COVER LID	1	-
8	503890802	KNEE JOINT ASSY	1	-
9	503892901	PIN	1	-
10	735310820	E-CLIP	1	-
11	537392901	SCREW	1	-
12	537347201	GEAR ASSY	1	-
13	537392601	HEAT PROTECTOR	1	-
14	544357501	LABEL	1	-
15	503217010	SCREW CCRPANT	10	-
16	525354301	BEARING SLEEVE	1	-
17	544250501	WEAR PLATE	1	-
18	537347801	KNOB	1	-
1	537110503	CLUTCH ASSY -	1	-
2	537359101	CLUTCH SPRING -	2	-
3	578097901	CLUTCH DRUM ASSY -	1	-
4	503255201	NEEDLE BEARING -	1	-
5	503931801	WORM WHEEL -	1	-
6	540057901	PUMP PISTON -	1	-
7	537154801	PUMP CYLINDER -	1	-
8	544084202	OIL HOSE -	1	-
1	537438201	CRANKCASE *Orange*	1	-
1	537438205	CRANKCASE *Grey*	1	-
2	503875802	STIFFENING PLATE	1	-
3	503875402	BAR BOLT	1	-
4	537334601	BAR BOLT	1	-
5	544036401	BAR BOLT	1	-
6	503240905	NEEDLE ROLLER	1	-
7	530026119	CHECK VALVE	1	-
8	537403501	FILTER	1	-

Ref.	Article N.	Description	Qty	Kit
9	544083301	OIL SCREEN	1	-
10	544331601	GUIDE PIN	3	-
11	503869301	SUPPORT	2	-
12	544111203	TANK CAP ASSY	1	-
13	589241101	GASKET	1	-
14	503578901	HOLDER	1	-
15	503886301	PIN	1	-
16	503218876	SCREW IHSCT	2	-
17	501007601	SUPPORT	2	-
18	503215103	SCREW IHSCT	1	-
19	544094001	CHAIN GUIDE PLATE	1	-
20	503217010	SCREW CCRPANT	1	-
21	503905901	SPIKE	1	-
22	503217520	SCREW IHSCFT	2	-
23	505422701	HAND GUARD	1	-
24	503892401	LOCK	1	-
25	503893001	SCREW	2	-
26	503436501	POSITION SPRING	1	-
1	525605001	CRANKSHAFT ASSY -	1	-
2	544062001	BEARING -	2	-
3	544013801	SEALING -	2	-
4	503256301	NEEDLE BEARING -	1	-
1	544348303	CYLINDER COVER ASSY	1	-
2	522709201	LABEL	1	-
3	595303001	SNAP LOCKING	3	-
1	544119802	CYLINDER -	1	-
2	544088905	PISTON ASSY -	1	-
3	544088701	PISTON RING -	1	-
4	544211301	CIRCLIP -	1	-
5	503256301	NEEDLE BEARING -	1	-
6	544108701	GASKET -	1	-

Ref.	Article N.	Description	Qty	Kit
7	544109201	GASKET -	1	-
8	503200527	SCREW IHSCM -	4	-
9	544870701	DECOMPRESSION VALVE -	1	-
10	503235111	SPARK PLUG -	1	-
11	540057301	SUPPORT -	1	-
12	503552201	PLUG -	1	-
13	544972001	GASKET KIT *Set of Gaskets*	1	-
1	537437906	FUEL TANK ASSY	1	-
2	503212810	SCREW CCRPANT	1	-
3	720182520	PARALLEL PIN	1	-
4	544099701	THROTTLE TRIGGER	1	-
5	544099901	SPRING	1	-
6	544099801	THROTTLE LOCKOUT	1	-
7	531246501	HANDLE INSERT *Grey soft*	1	-
8	504098801	THROTTLE CABLE ASSY	1	-
9	544128601	FUEL HOSE	1	-
10	503443201	FUEL FILTER	1	-
11	544129701	RETURN HOSE	1	-
12	544111203	TANK CAP ASSY	1	-
13	589241101	GASKET	1	-
14	503578901	HOLDER	1	-
15	544375001	LABEL	1	-
16	501007601	SUPPORT	1	-
17	544101201	ANTIVIBRATION ELEMENT	2	-
18	721126339	GROOVED PIN	1	-
19	501152901	TANK VENT ASSY	1	-
1	544083901	FRONT HANDLE -	1	-
2	503218876	SCREW IHSCT -	3	-
3	503210270	SCREW IHSCT -	2	-
4	503898301	ANTIVIBRATION ELEMENT	1	-

Ref.	Article N.	Description	Qty	Kit
		-		
1	544111801	FLYWHEEL ASSY -	1	-
2	537245601	STARTER PAWL -	2	-
3	501819903	SCREW -	2	-
4	503230042	WASHER -	2	-
5	529271101	SPRING -	2	-
6	503220401	NUT -	1	-
7	573935702	IGNITION MODULE -	1	-
8	510101501	WIRING ASSY -	1	-
9	503200220	SCREW IHSCFM -	2	-
1	544147702	MUFFLER ASSY -	1	-
2	579753301	SCREEN -	1	-
3	579753201	HEAT DEFLECTOR -	1	-
4	579753101	GASKET -	1	-
5	725536855	SCREW IHSCM -	2	-
6	724128759	SCREW CRPANM -	1	-
7	544972001	GASKET KIT *Set of Gaskets*	1	-
3	544464502	WINTER KIT *Winter kit*	1	-
4	503217016	SCREW CCRPANT -	2	-
1	544158502	STARTER ASSY -	1	-
2	544158401	STARTER HOUSING -	1	-
3	537283201	SLEEVE -	1	-

Ref.	Article N.	Description	Qty	Kit
4	540057502	SPRING CASSETTE ASSY -	1	-
5	503212810	SCREW CCRPANT -	2	-
6	537423201	STARTER PULLEY -	1	-
7	537423401	SPRING -	1	-
8	537423301	DRIVER -	1	-
9	537426601	SCREW -	1	-
10	505305125	STARTER ROPE -	1	-
11	537232501	STARTER HANDLE -	1	-
12	503217321	SCREW -	4	-
13	544081501	COOLING AIR CONDUCTER -	1	-
14	544377102	LABEL -	1	-

CLUTCH AND OIL PUMP

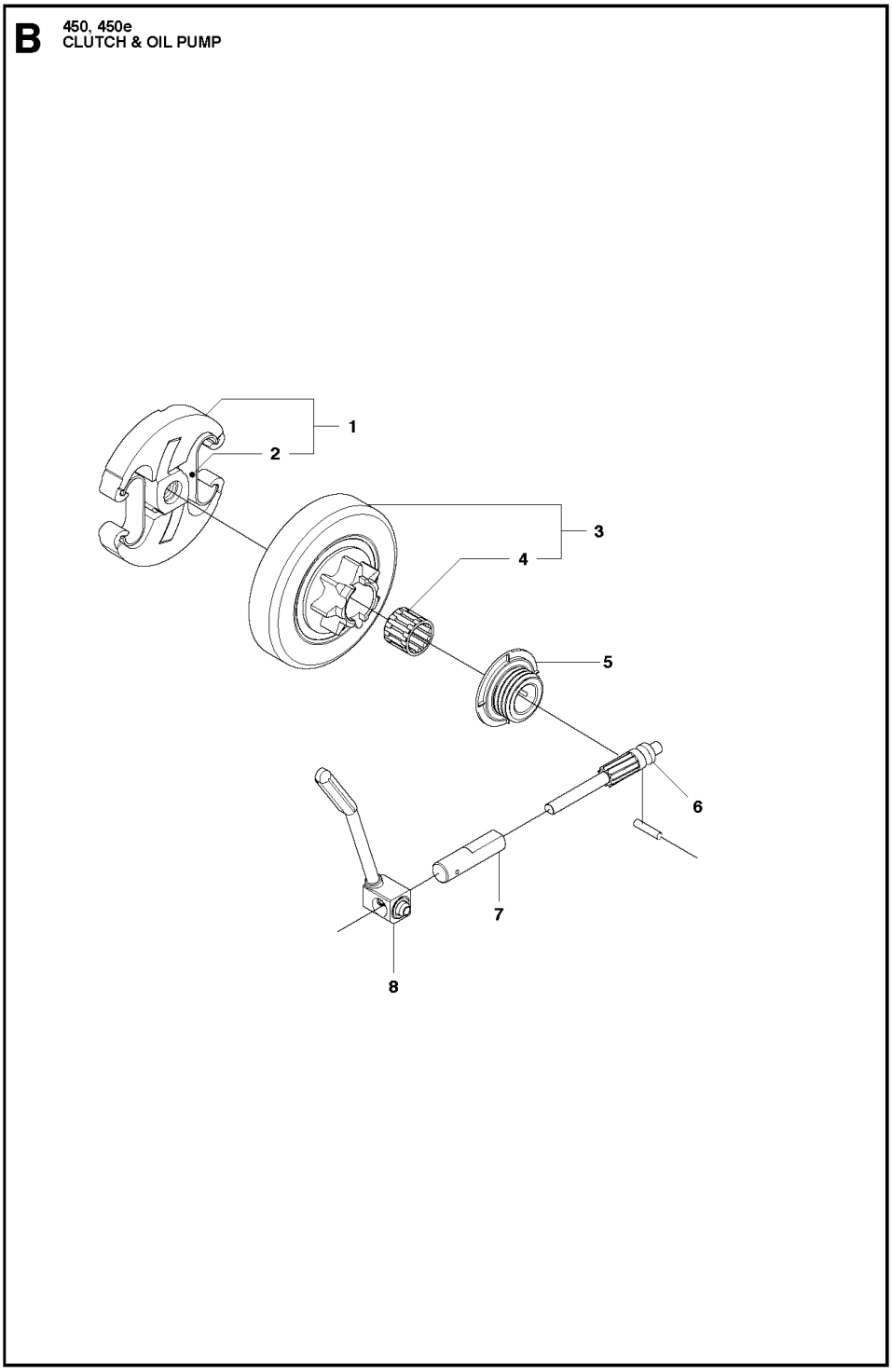

Ref.	Article N.	Description	Qty	Kit
1	501691701	COMBINATION WRENCH -	1	-
1	544082301	PIPE ASSY -	1	-
2	503200216	SCREW IHSCFM -	4	-

Ref.	Article N.	Description	Qty	Kit
3	544083801	INTERMEDATE WALL -	1	-
4	544084001	FLANGE -	1	-
5	503210725	SCREW IHSCFT -	2	-
6	544084101	FLANGE -	1	-
7	544148201	THROTTLE -	1	-
8	506450401	CARBURETTOR *C1M-EL37B*	1	-
9	505514701	FILTER HOLDER ASSY -	1	-
10	544231401	SHACKLE -	1	-
11	503936601	PURGE *air purge*	1	-
12	544401901	HOSE *suction hose*	1	-
13	577535101	RETURN HOSE *return hose*	1	-
14	544359902	CONTROL -	1	-
15	503210750	SCREW IHSCFT -	2	-
16	544080803	AIR FILTER *Felt*	1	-
16	544080802	AIR FILTER *µ 44*	1	-
16	544080801	AIR FILTER *µ 80*	1	-
17	502081001	SHAFT ASSY -	1	-
18	502081101	SPRING -	1	-
19	502080801	COLLAR -	1	-
20	502081201	VALVE -	1	-
21	503481801	SCREW -	1	-
22	537385201	CLIP	1	-

Ref.	Article N.	Description	Qty	Kit
		-		
23	502080901	ROD -	1	-
24	735583000	WASHER -	1	-
1	506450401	CARBURETTOR -	1	-
2	502078201	COLLAR -	1	-
3	502078301	COLLAR -	1	-
4	502078401	SCREW -	1	-
5	502078601	SPRING -	1	-
6	502078701	SPRING -	1	-
7	503479001	SCREW -	1	-
8	503479601	SCREW -	1	-
9	503479701	VALVE -	1	-
10	503480001	PIN RETAINING SCREW -	1	-
11	503480101	SCREW -	1	-
12	503480501	SCREW -	4	-
13	503481101	PIECE -	1	-
14	503481801	SCREW -	2	-
15	503535601	PLUG WELCH -	2	-
16	503535701	STRAINER -	1	-
17	503665901	LEVER -	1	-
18	537020101	GASKET -	1	-
19	537383101	DIAPHRAGM PUMP -	1	-

Ref.	Article N.	Description	Qty	Kit
20	502078901	COVER -	1	-
21	537383301	SCREW -	1	-
22	537383401	SPRING -	1	-
23	537383701	COVER -	1	-
24	544237701	NOZZLE ASSY -	1	-
25	502079001	DIAPHRAGM -	1	-
26	502079101	LEVER -	1	-
27	505101701	LEVER -	1	-
28	502079401	SHAFT ASSY -	1	-
29	502079501	SHAFT ASSY -	1	-
30	502247701	VALVE -	1	-
31	502079801	COLLAR -	1	-
32	537383601	GASKET -	1	-
33	502081701	LEVER -	1	-
34	502079901	SCREW -	1	-
35	502080001	SCREW -	1	-
36	502080101	VALVE -	1	-
37	502080201	GASKET KIT -	1	-
38	544119501	PLUG -	1	-
1	544217205	CLUTCH COVER ASSY *Orange*	1	-
2	504542801	COVER LID	1	-
3	537043001	BRAKE BAND ASSY	1	-
4	544083001	WEAR PROTECTION	1	-

Ref.	Article N.	Description	Qty	Kit
5	503855201	GUIDE BUSHING	1	-
6	503465901	BRAKE SPRING	1	-
7	544082901	COVER LID	1	-
8	503890802	KNEE JOINT ASSY	1	-
9	503892901	PIN	1	-
10	735310820	E-CLIP	1	-
11	537392901	SCREW	1	-
12	537347201	GEAR ASSY	1	-
13	537392601	HEAT PROTECTOR	1	-
14	544357501	LABEL	1	-
15	503217010	SCREW CCRPANT	10	-
16	525354301	BEARING SLEEVE	1	-
17	544250501	WEAR PLATE	1	-
18	537347801	KNOB	1	-
1	537110503	CLUTCH ASSY -	1	-
2	537359101	CLUTCH SPRING -	2	-
3	578097901	CLUTCH DRUM ASSY -	1	-
4	503255201	NEEDLE BEARING -	1	-
5	503931801	WORM WHEEL -	1	-
6	540057901	PUMP PISTON -	1	-
7	537154801	PUMP CYLINDER -	1	-
8	544084202	OIL HOSE -	1	-
1	537438201	CRANKCASE *Orange*	1	-
1	537438205	CRANKCASE *Grey*	1	-
2	503875802	STIFFENING PLATE	1	-
3	503875402	BAR BOLT	1	-
4	537334601	BAR BOLT	1	-
5	544036401	BAR BOLT	1	-
6	503240905	NEEDLE ROLLER	1	-
7	530026119	CHECK VALVE	1	-
8	537403501	FILTER	1	-

Ref.	Article N.	Description	Qty	Kit
9	544083301	OIL SCREEN	1	-
10	544331601	GUIDE PIN	3	-
11	503869301	SUPPORT	2	-
12	544111203	TANK CAP ASSY	1	-
13	589241101	GASKET	1	-
14	503578901	HOLDER	1	-
15	503886301	PIN	1	-
16	503218876	SCREW IHSCT	2	-
17	501007601	SUPPORT	2	-
18	503215103	SCREW IHSCT	1	-
19	544094001	CHAIN GUIDE PLATE	1	-
20	503217010	SCREW CCRPANT	1	-
21	503905901	SPIKE	1	-
22	503217520	SCREW IHSCFT	2	-
23	505422701	HAND GUARD	1	-
24	503892401	LOCK	1	-
25	503893001	SCREW	2	-
26	503436501	POSITION SPRING	1	-
1	525605001	CRANKSHAFT ASSY -	1	-
2	544062001	BEARING -	2	-
3	544013801	SEALING -	2	-
4	503256301	NEEDLE BEARING -	1	-
1	544348303	CYLINDER COVER ASSY	1	-
2	522709201	LABEL	1	-
3	595303001	SNAP LOCKING	3	-
1	544119802	CYLINDER -	1	-
2	544088905	PISTON ASSY -	1	-
3	544088701	PISTON RING -	1	-
4	544211301	CIRCLIP -	1	-
5	503256301	NEEDLE BEARING -	1	-
6	544108701	GASKET -	1	-

Ref.	Article N.	Description	Qty	Kit
7	544109201	GASKET -	1	-
8	503200527	SCREW IHSCM -	4	-
9	544870701	DECOMPRESSION VALVE -	1	-
10	503235111	SPARK PLUG -	1	-
11	540057301	SUPPORT -	1	-
12	503552201	PLUG -	1	-
13	544972001	GASKET KIT *Set of Gaskets*	1	-
1	537437906	FUEL TANK ASSY	1	-
2	503212810	SCREW CCRPANT	1	-
3	720182520	PARALLEL PIN	1	-
4	544099701	THROTTLE TRIGGER	1	-
5	544099901	SPRING	1	-
6	544099801	THROTTLE LOCKOUT	1	-
7	531246501	HANDLE INSERT *Grey soft*	1	-
8	504098801	THROTTLE CABLE ASSY	1	-
9	544128601	FUEL HOSE	1	-
10	503443201	FUEL FILTER	1	-
11	544129701	RETURN HOSE	1	-
12	544111203	TANK CAP ASSY	1	-
13	589241101	GASKET	1	-
14	503578901	HOLDER	1	-
15	544375001	LABEL	1	-
16	501007601	SUPPORT	1	-
17	544101201	ANTIVIBRATION ELEMENT	2	-
18	721126339	GROOVED PIN	1	-
19	501152901	TANK VENT ASSY	1	-
1	544083901	FRONT HANDLE -	1	-
2	503218876	SCREW IHSCT -	3	-
3	503210270	SCREW IHSCT -	2	-
4	503898301	ANTIVIBRATION ELEMENT	1	-

Ref.	Article N.	Description	Qty	Kit
		-		
1	544111801	FLYWHEEL ASSY -	1	-
2	537245601	STARTER PAWL -	2	-
3	501819903	SCREW -	2	-
4	503230042	WASHER -	2	-
5	529271101	SPRING -	2	-
6	503220401	NUT -	1	-
7	573935702	IGNITION MODULE -	1	-
8	510101501	WIRING ASSY -	1	-
9	503200220	SCREW IHSCFM -	2	-
1	544147702	MUFFLER ASSY -	1	-
2	579753301	SCREEN -	1	-
3	579753201	HEAT DEFLECTOR -	1	-
4	579753101	GASKET -	1	-
5	725536855	SCREW IHSCM -	2	-
6	724128759	SCREW CRPANM -	1	-
7	544972001	GASKET KIT *Set of Gaskets*	1	-
3	544464502	WINTER KIT *Winter kit*	1	-
4	503217016	SCREW CCRPANT -	2	-
1	544158502	STARTER ASSY -	1	-
2	544158401	STARTER HOUSING -	1	-
3	537283201	SLEEVE -	1	-

Ref.	Article N.	Description	Qty	Kit
4	540057502	SPRING CASSETTE ASSY -	1	-
5	503212810	SCREW CCRPANT -	2	-
6	537423201	STARTER PULLEY -	1	-
7	537423401	SPRING -	1	-
8	537423301	DRIVER -	1	-
9	537426601	SCREW -	1	-
10	505305125	STARTER ROPE -	1	-
11	537232501	STARTER HANDLE -	1	-
12	503217321	SCREW -	4	-
13	544081501	COOLING AIR CONDUCTER -	1	-
14	544377102	LABEL -	1	-

CRANKCASE

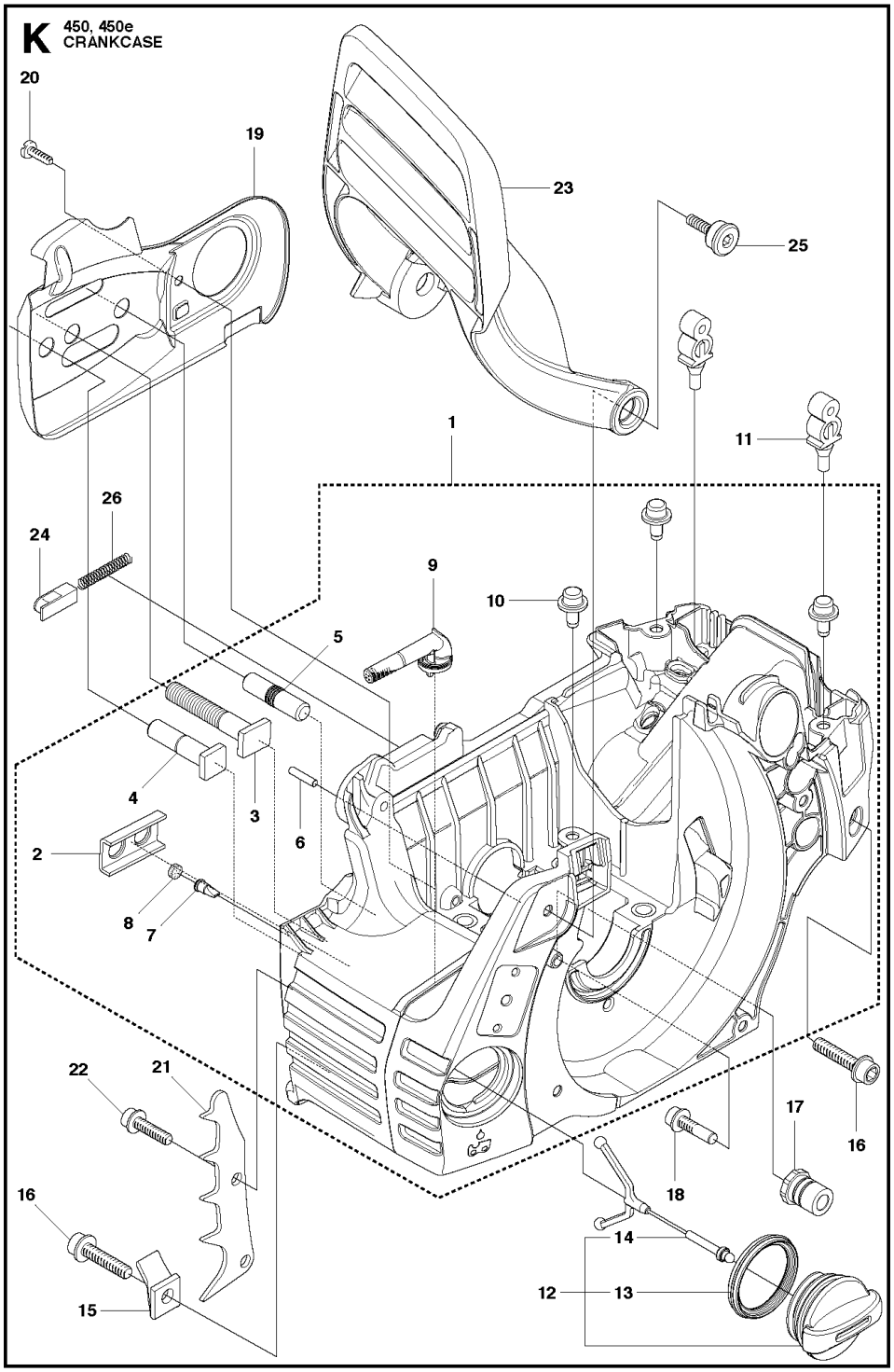

Ref.	Article N.	Description	Qty	Kit
1	501691701	COMBINATION WRENCH -	1	-
1	544082301	PIPE ASSY -	1	-
2	503200216	SCREW IHSCFM -	4	-

Ref.	Article N.	Description	Qty	Kit
3	544083801	INTERMEDATE WALL -	1	-
4	544084001	FLANGE -	1	-
5	503210725	SCREW IHSCFT -	2	-
6	544084101	FLANGE -	1	-
7	544148201	THROTTLE -	1	-
8	506450401	CARBURETTOR *C1M-EL37B*	1	-
9	505514701	FILTER HOLDER ASSY -	1	-
10	544231401	SHACKLE -	1	-
11	503936601	PURGE *air purge*	1	-
12	544401901	HOSE *suction hose*	1	-
13	577535101	RETURN HOSE *return hose*	1	-
14	544359902	CONTROL -	1	-
15	503210750	SCREW IHSCFT -	2	-
16	544080803	AIR FILTER *Felt*	1	-
16	544080802	AIR FILTER *µ 44*	1	-
16	544080801	AIR FILTER *µ 80*	1	-
17	502081001	SHAFT ASSY -	1	-
18	502081101	SPRING -	1	-
19	502080801	COLLAR -	1	-
20	502081201	VALVE -	1	-
21	503481801	SCREW -	1	-
22	537385201	CLIP	1	-

Ref.	Article N.	Description	Qty	Kit
		-		
23	502080901	ROD -	1	-
24	735583000	WASHER -	1	-
1	506450401	CARBURETTOR -	1	-
2	502078201	COLLAR -	1	-
3	502078301	COLLAR -	1	-
4	502078401	SCREW -	1	-
5	502078601	SPRING -	1	-
6	502078701	SPRING -	1	-
7	503479001	SCREW -	1	-
8	503479601	SCREW -	1	-
9	503479701	VALVE -	1	-
10	503480001	PIN RETAINING SCREW -	1	-
11	503480101	SCREW -	1	-
12	503480501	SCREW -	4	-
13	503481101	PIECE -	1	-
14	503481801	SCREW -	2	-
15	503535601	PLUG WELCH -	2	-
16	503535701	STRAINER -	1	-
17	503665901	LEVER -	1	-
18	537020101	GASKET -	1	-
19	537383101	DIAPHRAGM PUMP -	1	-

Ref.	Article N.	Description	Qty	Kit
20	502078901	COVER -	1	-
21	537383301	SCREW -	1	-
22	537383401	SPRING -	1	-
23	537383701	COVER -	1	-
24	544237701	NOZZLE ASSY -	1	-
25	502079001	DIAPHRAGM -	1	-
26	502079101	LEVER -	1	-
27	505101701	LEVER -	1	-
28	502079401	SHAFT ASSY -	1	-
29	502079501	SHAFT ASSY -	1	-
30	502247701	VALVE -	1	-
31	502079801	COLLAR -	1	-
32	537383601	GASKET -	1	-
33	502081701	LEVER -	1	-
34	502079901	SCREW -	1	-
35	502080001	SCREW -	1	-
36	502080101	VALVE -	1	-
37	502080201	GASKET KIT -	1	-
38	544119501	PLUG -	1	-
1	544217205	CLUTCH COVER ASSY *Orange*	1	-
2	504542801	COVER LID	1	-
3	537043001	BRAKE BAND ASSY	1	-
4	544083001	WEAR PROTECTION	1	-

Ref.	Article N.	Description	Qty	Kit
5	503855201	GUIDE BUSHING	1	-
6	503465901	BRAKE SPRING	1	-
7	544082901	COVER LID	1	-
8	503890802	KNEE JOINT ASSY	1	-
9	503892901	PIN	1	-
10	735310820	E-CLIP	1	-
11	537392901	SCREW	1	-
12	537347201	GEAR ASSY	1	-
13	537392601	HEAT PROTECTOR	1	-
14	544357501	LABEL	1	-
15	503217010	SCREW CCRPANT	10	-
16	525354301	BEARING SLEEVE	1	-
17	544250501	WEAR PLATE	1	-
18	537347801	KNOB	1	-
1	537110503	CLUTCH ASSY -	1	-
2	537359101	CLUTCH SPRING -	2	-
3	578097901	CLUTCH DRUM ASSY -	1	-
4	503255201	NEEDLE BEARING -	1	-
5	503931801	WORM WHEEL -	1	-
6	540057901	PUMP PISTON -	1	-
7	537154801	PUMP CYLINDER -	1	-
8	544084202	OIL HOSE -	1	-
1	537438201	CRANKCASE *Orange*	1	-
1	537438205	CRANKCASE *Grey*	1	-
2	503875802	STIFFENING PLATE	1	-
3	503875402	BAR BOLT	1	-
4	537334601	BAR BOLT	1	-
5	544036401	BAR BOLT	1	-
6	503240905	NEEDLE ROLLER	1	-
7	530026119	CHECK VALVE	1	-
8	537403501	FILTER	1	-

Ref.	Article N.	Description	Qty	Kit
9	544083301	OIL SCREEN	1	-
10	544331601	GUIDE PIN	3	-
11	503869301	SUPPORT	2	-
12	544111203	TANK CAP ASSY	1	-
13	589241101	GASKET	1	-
14	503578901	HOLDER	1	-
15	503886301	PIN	1	-
16	503218876	SCREW IHSCT	2	-
17	501007601	SUPPORT	2	-
18	503215103	SCREW IHSCT	1	-
19	544094001	CHAIN GUIDE PLATE	1	-
20	503217010	SCREW CCRPANT	1	-
21	503905901	SPIKE	1	-
22	503217520	SCREW IHSCFT	2	-
23	505422701	HAND GUARD	1	-
24	503892401	LOCK	1	-
25	503893001	SCREW	2	-
26	503436501	POSITION SPRING	1	-
1	525605001	CRANKSHAFT ASSY -	1	-
2	544062001	BEARING -	2	-
3	544013801	SEALING -	2	-
4	503256301	NEEDLE BEARING -	1	-
1	544348303	CYLINDER COVER ASSY	1	-
2	522709201	LABEL	1	-
3	595303001	SNAP LOCKING	3	-
1	544119802	CYLINDER -	1	-
2	544088905	PISTON ASSY -	1	-
3	544088701	PISTON RING -	1	-
4	544211301	CIRCLIP -	1	-
5	503256301	NEEDLE BEARING -	1	-
6	544108701	GASKET -	1	-

Ref.	Article N.	Description	Qty	Kit
7	544109201	GASKET -	1	-
8	503200527	SCREW IHSCM -	4	-
9	544870701	DECOMPRESSION VALVE -	1	-
10	503235111	SPARK PLUG -	1	-
11	540057301	SUPPORT -	1	-
12	503552201	PLUG -	1	-
13	544972001	GASKET KIT *Set of Gaskets*	1	-
1	537437906	FUEL TANK ASSY	1	-
2	503212810	SCREW CCRPANT	1	-
3	720182520	PARALLEL PIN	1	-
4	544099701	THROTTLE TRIGGER	1	-
5	544099901	SPRING	1	-
6	544099801	THROTTLE LOCKOUT	1	-
7	531246501	HANDLE INSERT *Grey soft*	1	-
8	504098801	THROTTLE CABLE ASSY	1	-
9	544128601	FUEL HOSE	1	-
10	503443201	FUEL FILTER	1	-
11	544129701	RETURN HOSE	1	-
12	544111203	TANK CAP ASSY	1	-
13	589241101	GASKET	1	-
14	503578901	HOLDER	1	-
15	544375001	LABEL	1	-
16	501007601	SUPPORT	1	-
17	544101201	ANTIVIBRATION ELEMENT	2	-
18	721126339	GROOVED PIN	1	-
19	501152901	TANK VENT ASSY	1	-
1	544083901	FRONT HANDLE -	1	-
2	503218876	SCREW IHSCT -	3	-
3	503210270	SCREW IHSCT -	2	-
4	503898301	ANTIVIBRATION ELEMENT	1	-

Ref.	Article N.	Description	Qty	Kit
		-		
1	544111801	FLYWHEEL ASSY -	1	-
2	537245601	STARTER PAWL -	2	-
3	501819903	SCREW -	2	-
4	503230042	WASHER -	2	-
5	529271101	SPRING -	2	-
6	503220401	NUT -	1	-
7	573935702	IGNITION MODULE -	1	-
8	510101501	WIRING ASSY -	1	-
9	503200220	SCREW IHSCFM -	2	-
1	544147702	MUFFLER ASSY -	1	-
2	579753301	SCREEN -	1	-
3	579753201	HEAT DEFLECTOR -	1	-
4	579753101	GASKET -	1	-
5	725536855	SCREW IHSCM -	2	-
6	724128759	SCREW CRPANM -	1	-
7	544972001	GASKET KIT *Set of Gaskets*	1	-
3	544464502	WINTER KIT *Winter kit*	1	-
4	503217016	SCREW CCRPANT -	2	-
1	544158502	STARTER ASSY -	1	-
2	544158401	STARTER HOUSING -	1	-
3	537283201	SLEEVE -	1	-

Ref.	Article N.	Description	Qty	Kit
4	540057502	SPRING CASSETTE ASSY -	1	-
5	503212810	SCREW CCRPANT -	2	-
6	537423201	STARTER PULLEY -	1	-
7	537423401	SPRING -	1	-
8	537423301	DRIVER -	1	-
9	537426601	SCREW -	1	-
10	505305125	STARTER ROPE -	1	-
11	537232501	STARTER HANDLE -	1	-
12	503217321	SCREW -	4	-
13	544081501	COOLING AIR CONDUCTER -	1	-
14	544377102	LABEL -	1	-

CRANKSHAFT

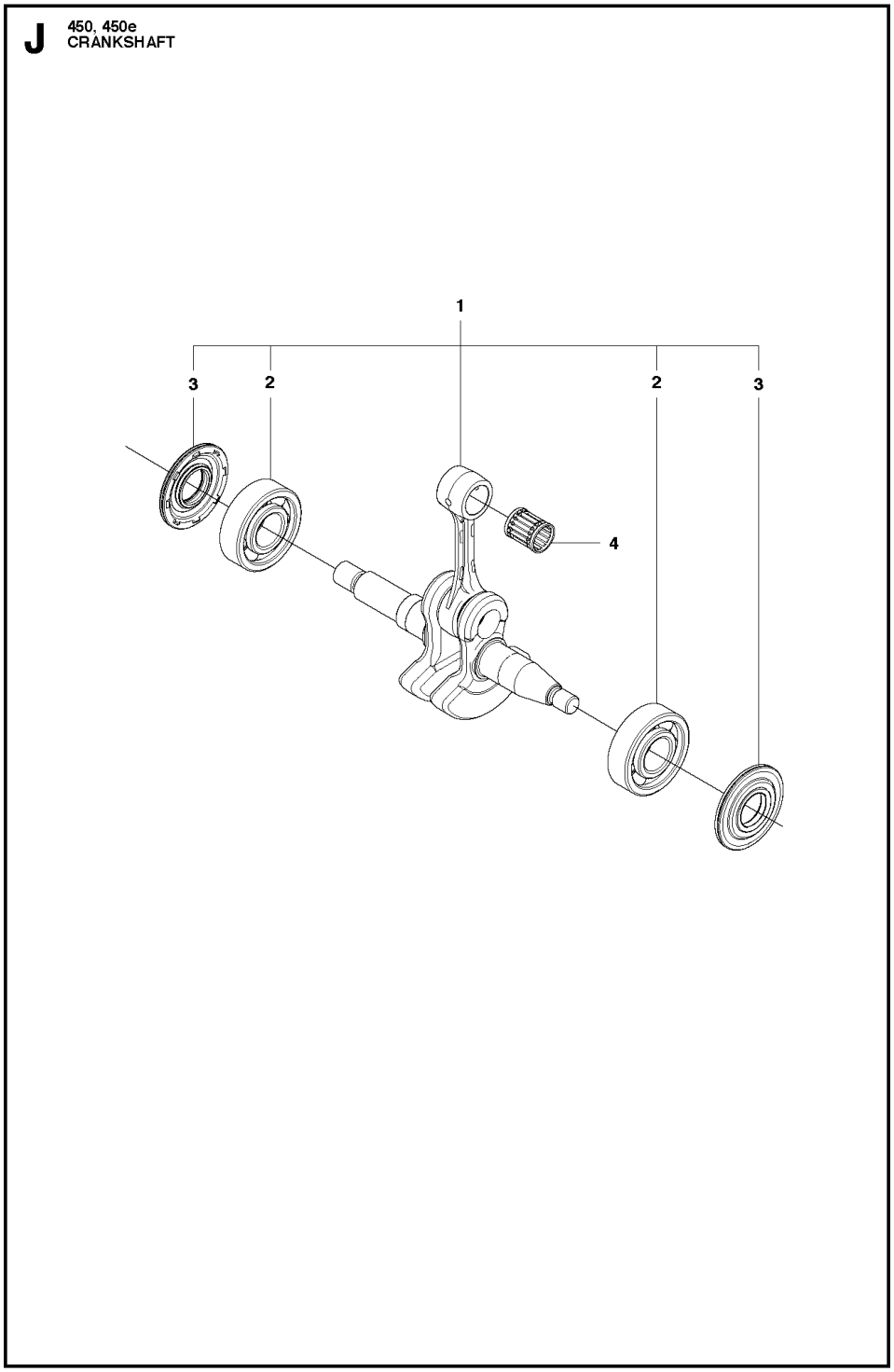

Ref.	Article N.	Description	Qty	Kit
1	501691701	COMBINATION WRENCH -	1	-
1	544082301	PIPE ASSY -	1	-
2	503200216	SCREW IHSCFM -	4	-

Ref.	Article N.	Description	Qty	Kit
3	544083801	INTERMEDATE WALL -	1	-
4	544084001	FLANGE -	1	-
5	503210725	SCREW IHSCFT -	2	-
6	544084101	FLANGE -	1	-
7	544148201	THROTTLE -	1	-
8	506450401	CARBURETTOR *C1M-EL37B*	1	-
9	505514701	FILTER HOLDER ASSY -	1	-
10	544231401	SHACKLE -	1	-
11	503936601	PURGE *air purge*	1	-
12	544401901	HOSE *suction hose*	1	-
13	577535101	RETURN HOSE *return hose*	1	-
14	544359902	CONTROL -	1	-
15	503210750	SCREW IHSCFT -	2	-
16	544080803	AIR FILTER *Felt*	1	-
16	544080802	AIR FILTER *µ 44*	1	-
16	544080801	AIR FILTER *µ 80*	1	-
17	502081001	SHAFT ASSY -	1	-
18	502081101	SPRING -	1	-
19	502080801	COLLAR -	1	-
20	502081201	VALVE -	1	-
21	503481801	SCREW -	1	-
22	537385201	CLIP	1	-

Ref.	Article N.	Description	Qty	Kit
		-		
23	502080901	ROD -	1	-
24	735583000	WASHER -	1	-
1	506450401	CARBURETTOR -	1	-
2	502078201	COLLAR -	1	-
3	502078301	COLLAR -	1	-
4	502078401	SCREW -	1	-
5	502078601	SPRING -	1	-
6	502078701	SPRING -	1	-
7	503479001	SCREW -	1	-
8	503479601	SCREW -	1	-
9	503479701	VALVE -	1	-
10	503480001	PIN RETAINING SCREW -	1	-
11	503480101	SCREW -	1	-
12	503480501	SCREW -	4	-
13	503481101	PIECE -	1	-
14	503481801	SCREW -	2	-
15	503535601	PLUG WELCH -	2	-
16	503535701	STRAINER -	1	-
17	503665901	LEVER -	1	-
18	537020101	GASKET -	1	-
19	537383101	DIAPHRAGM PUMP -	1	-

Ref.	Article N.	Description	Qty	Kit
20	502078901	COVER -	1	-
21	537383301	SCREW -	1	-
22	537383401	SPRING -	1	-
23	537383701	COVER -	1	-
24	544237701	NOZZLE ASSY -	1	-
25	502079001	DIAPHRAGM -	1	-
26	502079101	LEVER -	1	-
27	505101701	LEVER -	1	-
28	502079401	SHAFT ASSY -	1	-
29	502079501	SHAFT ASSY -	1	-
30	502247701	VALVE -	1	-
31	502079801	COLLAR -	1	-
32	537383601	GASKET -	1	-
33	502081701	LEVER -	1	-
34	502079901	SCREW -	1	-
35	502080001	SCREW -	1	-
36	502080101	VALVE -	1	-
37	502080201	GASKET KIT -	1	-
38	544119501	PLUG -	1	-
1	544217205	CLUTCH COVER ASSY *Orange*	1	-
2	504542801	COVER LID	1	-
3	537043001	BRAKE BAND ASSY	1	-
4	544083001	WEAR PROTECTION	1	-

Ref.	Article N.	Description	Qty	Kit
5	503855201	GUIDE BUSHING	1	-
6	503465901	BRAKE SPRING	1	-
7	544082901	COVER LID	1	-
8	503890802	KNEE JOINT ASSY	1	-
9	503892901	PIN	1	-
10	735310820	E-CLIP	1	-
11	537392901	SCREW	1	-
12	537347201	GEAR ASSY	1	-
13	537392601	HEAT PROTECTOR	1	-
14	544357501	LABEL	1	-
15	503217010	SCREW CCRPANT	10	-
16	525354301	BEARING SLEEVE	1	-
17	544250501	WEAR PLATE	1	-
18	537347801	KNOB	1	-
1	537110503	CLUTCH ASSY -	1	-
2	537359101	CLUTCH SPRING -	2	-
3	578097901	CLUTCH DRUM ASSY -	1	-
4	503255201	NEEDLE BEARING -	1	-
5	503931801	WORM WHEEL -	1	-
6	540057901	PUMP PISTON -	1	-
7	537154801	PUMP CYLINDER -	1	-
8	544084202	OIL HOSE -	1	-
1	537438201	CRANKCASE *Orange*	1	-
1	537438205	CRANKCASE *Grey*	1	-
2	503875802	STIFFENING PLATE	1	-
3	503875402	BAR BOLT	1	-
4	537334601	BAR BOLT	1	-
5	544036401	BAR BOLT	1	-
6	503240905	NEEDLE ROLLER	1	-
7	530026119	CHECK VALVE	1	-
8	537403501	FILTER	1	-

Ref.	Article N.	Description	Qty	Kit
9	544083301	OIL SCREEN	1	-
10	544331601	GUIDE PIN	3	-
11	503869301	SUPPORT	2	-
12	544111203	TANK CAP ASSY	1	-
13	589241101	GASKET	1	-
14	503578901	HOLDER	1	-
15	503886301	PIN	1	-
16	503218876	SCREW IHSCT	2	-
17	501007601	SUPPORT	2	-
18	503215103	SCREW IHSCT	1	-
19	544094001	CHAIN GUIDE PLATE	1	-
20	503217010	SCREW CCRPANT	1	-
21	503905901	SPIKE	1	-
22	503217520	SCREW IHSCFT	2	-
23	505422701	HAND GUARD	1	-
24	503892401	LOCK	1	-
25	503893001	SCREW	2	-
26	503436501	POSITION SPRING	1	-
1	525605001	CRANKSHAFT ASSY -	1	-
2	544062001	BEARING -	2	-
3	544013801	SEALING -	2	-
4	503256301	NEEDLE BEARING -	1	-
1	544348303	CYLINDER COVER ASSY	1	-
2	522709201	LABEL	1	-
3	595303001	SNAP LOCKING	3	-
1	544119802	CYLINDER -	1	-
2	544088905	PISTON ASSY -	1	-
3	544088701	PISTON RING -	1	-
4	544211301	CIRCLIP -	1	-
5	503256301	NEEDLE BEARING -	1	-
6	544108701	GASKET -	1	-

Ref.	Article N.	Description	Qty	Kit
7	544109201	GASKET -	1	-
8	503200527	SCREW IHSCM -	4	-
9	544870701	DECOMPRESSION VALVE -	1	-
10	503235111	SPARK PLUG -	1	-
11	540057301	SUPPORT -	1	-
12	503552201	PLUG -	1	-
13	544972001	GASKET KIT *Set of Gaskets*	1	-
1	537437906	FUEL TANK ASSY	1	-
2	503212810	SCREW CCRPANT	1	-
3	720182520	PARALLEL PIN	1	-
4	544099701	THROTTLE TRIGGER	1	-
5	544099901	SPRING	1	-
6	544099801	THROTTLE LOCKOUT	1	-
7	531246501	HANDLE INSERT *Grey soft*	1	-
8	504098801	THROTTLE CABLE ASSY	1	-
9	544128601	FUEL HOSE	1	-
10	503443201	FUEL FILTER	1	-
11	544129701	RETURN HOSE	1	-
12	544111203	TANK CAP ASSY	1	-
13	589241101	GASKET	1	-
14	503578901	HOLDER	1	-
15	544375001	LABEL	1	-
16	501007601	SUPPORT	1	-
17	544101201	ANTIVIBRATION ELEMENT	2	-
18	721126339	GROOVED PIN	1	-
19	501152901	TANK VENT ASSY	1	-
1	544083901	FRONT HANDLE -	1	-
2	503218876	SCREW IHSCT -	3	-
3	503210270	SCREW IHSCT -	2	-
4	503898301	ANTIVIBRATION ELEMENT	1	-

Ref.	Article N.	Description	Qty	Kit
		-		
1	544111801	FLYWHEEL ASSY -	1	-
2	537245601	STARTER PAWL -	2	-
3	501819903	SCREW -	2	-
4	503230042	WASHER -	2	-
5	529271101	SPRING -	2	-
6	503220401	NUT -	1	-
7	573935702	IGNITION MODULE -	1	-
8	510101501	WIRING ASSY -	1	-
9	503200220	SCREW IHSCFM -	2	-
1	544147702	MUFFLER ASSY -	1	-
2	579753301	SCREEN -	1	-
3	579753201	HEAT DEFLECTOR -	1	-
4	579753101	GASKET -	1	-
5	725536855	SCREW IHSCM -	2	-
6	724128759	SCREW CRPANM -	1	-
7	544972001	GASKET KIT *Set of Gaskets*	1	-
3	544464502	WINTER KIT *Winter kit*	1	-
4	503217016	SCREW CCRPANT -	2	-
1	544158502	STARTER ASSY -	1	-
2	544158401	STARTER HOUSING -	1	-
3	537283201	SLEEVE -	1	-

Ref.	Article N.	Description	Qty	Kit
4	540057502	SPRING CASSETTE ASSY -	1	-
5	503212810	SCREW CCRPANT -	2	-
6	537423201	STARTER PULLEY -	1	-
7	537423401	SPRING -	1	-
8	537423301	DRIVER -	1	-
9	537426601	SCREW -	1	-
10	505305125	STARTER ROPE -	1	-
11	537232501	STARTER HANDLE -	1	-
12	503217321	SCREW -	4	-
13	544081501	COOLING AIR CONDUCTER -	1	-
14	544377102	LABEL -	1	-

CYLINDER COVER

C 450, 450e
CYLINDER COVER

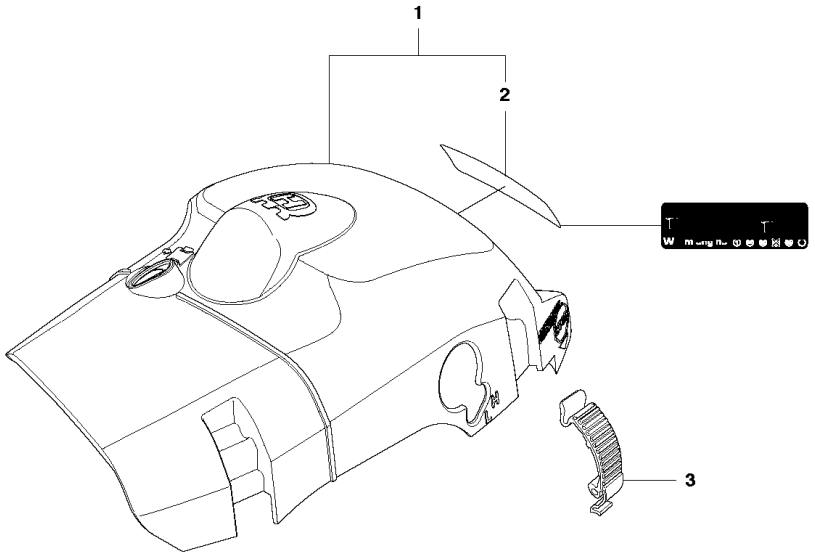

Ref.	Article N.	Description	Qty	Kit
1	501691701	COMBINATION WRENCH -	1	-
1	544082301	PIPE ASSY -	1	-
2	503200216	SCREW IHSCFM -	4	-

Ref.	Article N.	Description	Qty	Kit
3	544083801	INTERMEDATE WALL -	1	-
4	544084001	FLANGE -	1	-
5	503210725	SCREW IHSCFT -	2	-
6	544084101	FLANGE -	1	-
7	544148201	THROTTLE -	1	-
8	506450401	CARBURETTOR *C1M-EL37B*	1	-
9	505514701	FILTER HOLDER ASSY -	1	-
10	544231401	SHACKLE -	1	-
11	503936601	PURGE *air purge*	1	-
12	544401901	HOSE *suction hose*	1	-
13	577535101	RETURN HOSE *return hose*	1	-
14	544359902	CONTROL -	1	-
15	503210750	SCREW IHSCFT -	2	-
16	544080803	AIR FILTER *Felt*	1	-
16	544080802	AIR FILTER *µ 44*	1	-
16	544080801	AIR FILTER *µ 80*	1	-
17	502081001	SHAFT ASSY -	1	-
18	502081101	SPRING -	1	-
19	502080801	COLLAR -	1	-
20	502081201	VALVE -	1	-
21	503481801	SCREW -	1	-
22	537385201	CLIP	1	-

Ref.	Article N.	Description	Qty	Kit
		-		
23	502080901	ROD -	1	-
24	735583000	WASHER -	1	-
1	506450401	CARBURETTOR -	1	-
2	502078201	COLLAR -	1	-
3	502078301	COLLAR -	1	-
4	502078401	SCREW -	1	-
5	502078601	SPRING -	1	-
6	502078701	SPRING -	1	-
7	503479001	SCREW -	1	-
8	503479601	SCREW -	1	-
9	503479701	VALVE -	1	-
10	503480001	PIN RETAINING SCREW -	1	-
11	503480101	SCREW -	1	-
12	503480501	SCREW -	4	-
13	503481101	PIECE -	1	-
14	503481801	SCREW -	2	-
15	503535601	PLUG WELCH -	2	-
16	503535701	STRAINER -	1	-
17	503665901	LEVER -	1	-
18	537020101	GASKET -	1	-
19	537383101	DIAPHRAGM PUMP -	1	-

Ref.	Article N.	Description	Qty	Kit
20	502078901	COVER -	1	-
21	537383301	SCREW -	1	-
22	537383401	SPRING -	1	-
23	537383701	COVER -	1	-
24	544237701	NOZZLE ASSY -	1	-
25	502079001	DIAPHRAGM -	1	-
26	502079101	LEVER -	1	-
27	505101701	LEVER -	1	-
28	502079401	SHAFT ASSY -	1	-
29	502079501	SHAFT ASSY -	1	-
30	502247701	VALVE -	1	-
31	502079801	COLLAR -	1	-
32	537383601	GASKET -	1	-
33	502081701	LEVER -	1	-
34	502079901	SCREW -	1	-
35	502080001	SCREW -	1	-
36	502080101	VALVE -	1	-
37	502080201	GASKET KIT -	1	-
38	544119501	PLUG -	1	-
1	544217205	CLUTCH COVER ASSY *Orange*	1	-
2	504542801	COVER LID	1	-
3	537043001	BRAKE BAND ASSY	1	-
4	544083001	WEAR PROTECTION	1	-

Ref.	Article N.	Description	Qty	Kit
5	503855201	GUIDE BUSHING	1	-
6	503465901	BRAKE SPRING	1	-
7	544082901	COVER LID	1	-
8	503890802	KNEE JOINT ASSY	1	-
9	503892901	PIN	1	-
10	735310820	E-CLIP	1	-
11	537392901	SCREW	1	-
12	537347201	GEAR ASSY	1	-
13	537392601	HEAT PROTECTOR	1	-
14	544357501	LABEL	1	-
15	503217010	SCREW CCRPANT	10	-
16	525354301	BEARING SLEEVE	1	-
17	544250501	WEAR PLATE	1	-
18	537347801	KNOB	1	-
1	537110503	CLUTCH ASSY -	1	-
2	537359101	CLUTCH SPRING -	2	-
3	578097901	CLUTCH DRUM ASSY -	1	-
4	503255201	NEEDLE BEARING -	1	-
5	503931801	WORM WHEEL -	1	-
6	540057901	PUMP PISTON -	1	-
7	537154801	PUMP CYLINDER -	1	-
8	544084202	OIL HOSE -	1	-
1	537438201	CRANKCASE *Orange*	1	-
1	537438205	CRANKCASE *Grey*	1	-
2	503875802	STIFFENING PLATE	1	-
3	503875402	BAR BOLT	1	-
4	537334601	BAR BOLT	1	-
5	544036401	BAR BOLT	1	-
6	503240905	NEEDLE ROLLER	1	-
7	530026119	CHECK VALVE	1	-
8	537403501	FILTER	1	-

Ref.	Article N.	Description	Qty	Kit
9	544083301	OIL SCREEN	1	-
10	544331601	GUIDE PIN	3	-
11	503869301	SUPPORT	2	-
12	544111203	TANK CAP ASSY	1	-
13	589241101	GASKET	1	-
14	503578901	HOLDER	1	-
15	503886301	PIN	1	-
16	503218876	SCREW IHSCT	2	-
17	501007601	SUPPORT	2	-
18	503215103	SCREW IHSCT	1	-
19	544094001	CHAIN GUIDE PLATE	1	-
20	503217010	SCREW CCRPANT	1	-
21	503905901	SPIKE	1	-
22	503217520	SCREW IHSCFT	2	-
23	505422701	HAND GUARD	1	-
24	503892401	LOCK	1	-
25	503893001	SCREW	2	-
26	503436501	POSITION SPRING	1	-
1	525605001	CRANKSHAFT ASSY -	1	-
2	544062001	BEARING -	2	-
3	544013801	SEALING -	2	-
4	503256301	NEEDLE BEARING -	1	-
1	544348303	CYLINDER COVER ASSY	1	-
2	522709201	LABEL	1	-
3	595303001	SNAP LOCKING	3	-
1	544119802	CYLINDER -	1	-
2	544088905	PISTON ASSY -	1	-
3	544088701	PISTON RING -	1	-
4	544211301	CIRCLIP -	1	-
5	503256301	NEEDLE BEARING -	1	-
6	544108701	GASKET -	1	-

Ref.	Article N.	Description	Qty	Kit
7	544109201	GASKET -	1	-
8	503200527	SCREW IHSCM -	4	-
9	544870701	DECOMPRESSION VALVE -	1	-
10	503235111	SPARK PLUG -	1	-
11	540057301	SUPPORT -	1	-
12	503552201	PLUG -	1	-
13	544972001	GASKET KIT *Set of Gaskets*	1	-
1	537437906	FUEL TANK ASSY	1	-
2	503212810	SCREW CCRPANT	1	-
3	720182520	PARALLEL PIN	1	-
4	544099701	THROTTLE TRIGGER	1	-
5	544099901	SPRING	1	-
6	544099801	THROTTLE LOCKOUT	1	-
7	531246501	HANDLE INSERT *Grey soft*	1	-
8	504098801	THROTTLE CABLE ASSY	1	-
9	544128601	FUEL HOSE	1	-
10	503443201	FUEL FILTER	1	-
11	544129701	RETURN HOSE	1	-
12	544111203	TANK CAP ASSY	1	-
13	589241101	GASKET	1	-
14	503578901	HOLDER	1	-
15	544375001	LABEL	1	-
16	501007601	SUPPORT	1	-
17	544101201	ANTIVIBRATION ELEMENT	2	-
18	721126339	GROOVED PIN	1	-
19	501152901	TANK VENT ASSY	1	-
1	544083901	FRONT HANDLE -	1	-
2	503218876	SCREW IHSCT -	3	-
3	503210270	SCREW IHSCT -	2	-
4	503898301	ANTIVIBRATION ELEMENT	1	-

Ref.	Article N.	Description	Qty	Kit
		-		
1	544111801	FLYWHEEL ASSY -	1	-
2	537245601	STARTER PAWL -	2	-
3	501819903	SCREW -	2	-
4	503230042	WASHER -	2	-
5	529271101	SPRING -	2	-
6	503220401	NUT -	1	-
7	573935702	IGNITION MODULE -	1	-
8	510101501	WIRING ASSY -	1	-
9	503200220	SCREW IHSCFM -	2	-
1	544147702	MUFFLER ASSY -	1	-
2	579753301	SCREEN -	1	-
3	579753201	HEAT DEFLECTOR -	1	-
4	579753101	GASKET -	1	-
5	725536855	SCREW IHSCM -	2	-
6	724128759	SCREW CRPANM -	1	-
7	544972001	GASKET KIT *Set of Gaskets*	1	-
3	544464502	WINTER KIT *Winter kit*	1	-
4	503217016	SCREW CCRPANT -	2	-
1	544158502	STARTER ASSY -	1	-
2	544158401	STARTER HOUSING -	1	-
3	537283201	SLEEVE -	1	-

Ref.	Article N.	Description	Qty	Kit
4	540057502	SPRING CASSETTE ASSY -	1	-
5	503212810	SCREW CCRPANT -	2	-
6	537423201	STARTER PULLEY -	1	-
7	537423401	SPRING -	1	-
8	537423301	DRIVER -	1	-
9	537426601	SCREW -	1	-
10	505305125	STARTER ROPE -	1	-
11	537232501	STARTER HANDLE -	1	-
12	503217321	SCREW -	4	-
13	544081501	COOLING AIR CONDUCTER -	1	-
14	544377102	LABEL -	1	-

CYLINDER PISTON

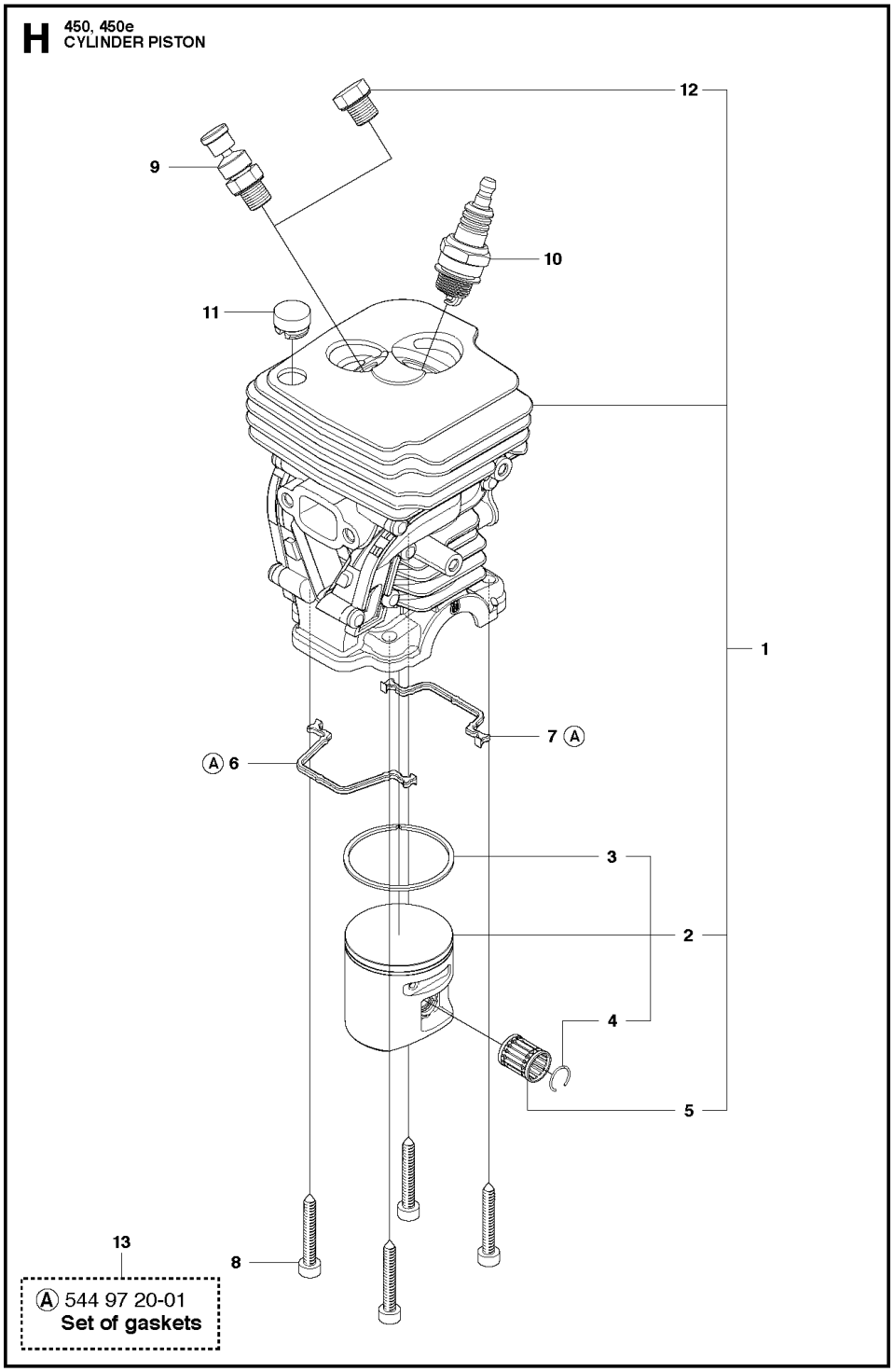

Ref.	Article N.	Description	Qty	Kit
1	501691701	COMBINATION WRENCH -	1	-
1	544082301	PIPE ASSY -	1	-
2	503200216	SCREW IHSCFM -	4	-

Ref.	Article N.	Description	Qty	Kit
3	544083801	INTERMEDATE WALL -	1	-
4	544084001	FLANGE -	1	-
5	503210725	SCREW IHSCFT -	2	-
6	544084101	FLANGE -	1	-
7	544148201	THROTTLE -	1	-
8	506450401	CARBURETTOR *C1M-EL37B*	1	-
9	505514701	FILTER HOLDER ASSY -	1	-
10	544231401	SHACKLE -	1	-
11	503936601	PURGE *air purge*	1	-
12	544401901	HOSE *suction hose*	1	-
13	577535101	RETURN HOSE *return hose*	1	-
14	544359902	CONTROL -	1	-
15	503210750	SCREW IHSCFT -	2	-
16	544080803	AIR FILTER *Felt*	1	-
16	544080802	AIR FILTER *µ 44*	1	-
16	544080801	AIR FILTER *µ 80*	1	-
17	502081001	SHAFT ASSY -	1	-
18	502081101	SPRING -	1	-
19	502080801	COLLAR -	1	-
20	502081201	VALVE -	1	-
21	503481801	SCREW -	1	-
22	537385201	CLIP	1	-

Ref.	Article N.	Description	Qty	Kit
		-		
23	502080901	ROD -	1	-
24	735583000	WASHER -	1	-
1	506450401	CARBURETTOR -	1	-
2	502078201	COLLAR -	1	-
3	502078301	COLLAR -	1	-
4	502078401	SCREW -	1	-
5	502078601	SPRING -	1	-
6	502078701	SPRING -	1	-
7	503479001	SCREW -	1	-
8	503479601	SCREW -	1	-
9	503479701	VALVE -	1	-
10	503480001	PIN RETAINING SCREW -	1	-
11	503480101	SCREW -	1	-
12	503480501	SCREW -	4	-
13	503481101	PIECE -	1	-
14	503481801	SCREW -	2	-
15	503535601	PLUG WELCH -	2	-
16	503535701	STRAINER -	1	-
17	503665901	LEVER -	1	-
18	537020101	GASKET -	1	-
19	537383101	DIAPHRAGM PUMP -	1	-

Ref.	Article N.	Description	Qty	Kit
20	502078901	COVER -	1	-
21	537383301	SCREW -	1	-
22	537383401	SPRING -	1	-
23	537383701	COVER -	1	-
24	544237701	NOZZLE ASSY -	1	-
25	502079001	DIAPHRAGM -	1	-
26	502079101	LEVER -	1	-
27	505101701	LEVER -	1	-
28	502079401	SHAFT ASSY -	1	-
29	502079501	SHAFT ASSY -	1	-
30	502247701	VALVE -	1	-
31	502079801	COLLAR -	1	-
32	537383601	GASKET -	1	-
33	502081701	LEVER -	1	-
34	502079901	SCREW -	1	-
35	502080001	SCREW -	1	-
36	502080101	VALVE -	1	-
37	502080201	GASKET KIT -	1	-
38	544119501	PLUG -	1	-
1	544217205	CLUTCH COVER ASSY *Orange*	1	-
2	504542801	COVER LID	1	-
3	537043001	BRAKE BAND ASSY	1	-
4	544083001	WEAR PROTECTION	1	-

Ref.	Article N.	Description	Qty	Kit
5	503855201	GUIDE BUSHING	1	-
6	503465901	BRAKE SPRING	1	-
7	544082901	COVER LID	1	-
8	503890802	KNEE JOINT ASSY	1	-
9	503892901	PIN	1	-
10	735310820	E-CLIP	1	-
11	537392901	SCREW	1	-
12	537347201	GEAR ASSY	1	-
13	537392601	HEAT PROTECTOR	1	-
14	544357501	LABEL	1	-
15	503217010	SCREW CCRPANT	10	-
16	525354301	BEARING SLEEVE	1	-
17	544250501	WEAR PLATE	1	-
18	537347801	KNOB	1	-
1	537110503	CLUTCH ASSY -	1	-
2	537359101	CLUTCH SPRING -	2	-
3	578097901	CLUTCH DRUM ASSY -	1	-
4	503255201	NEEDLE BEARING -	1	-
5	503931801	WORM WHEEL -	1	-
6	540057901	PUMP PISTON -	1	-
7	537154801	PUMP CYLINDER -	1	-
8	544084202	OIL HOSE -	1	-
1	537438201	CRANKCASE *Orange*	1	-
1	537438205	CRANKCASE *Grey*	1	-
2	503875802	STIFFENING PLATE	1	-
3	503875402	BAR BOLT	1	-
4	537334601	BAR BOLT	1	-
5	544036401	BAR BOLT	1	-
6	503240905	NEEDLE ROLLER	1	-
7	530026119	CHECK VALVE	1	-
8	537403501	FILTER	1	-

Ref.	Article N.	Description	Qty	Kit
9	544083301	OIL SCREEN	1	-
10	544331601	GUIDE PIN	3	-
11	503869301	SUPPORT	2	-
12	544111203	TANK CAP ASSY	1	-
13	589241101	GASKET	1	-
14	503578901	HOLDER	1	-
15	503886301	PIN	1	-
16	503218876	SCREW IHSCT	2	-
17	501007601	SUPPORT	2	-
18	503215103	SCREW IHSCT	1	-
19	544094001	CHAIN GUIDE PLATE	1	-
20	503217010	SCREW CCRPANT	1	-
21	503905901	SPIKE	1	-
22	503217520	SCREW IHSCFT	2	-
23	505422701	HAND GUARD	1	-
24	503892401	LOCK	1	-
25	503893001	SCREW	2	-
26	503436501	POSITION SPRING	1	-
1	525605001	CRANKSHAFT ASSY -	1	-
2	544062001	BEARING -	2	-
3	544013801	SEALING -	2	-
4	503256301	NEEDLE BEARING -	1	-
1	544348303	CYLINDER COVER ASSY	1	-
2	522709201	LABEL	1	-
3	595303001	SNAP LOCKING	3	-
1	544119802	CYLINDER -	1	-
2	544088905	PISTON ASSY -	1	-
3	544088701	PISTON RING -	1	-
4	544211301	CIRCLIP -	1	-
5	503256301	NEEDLE BEARING -	1	-
6	544108701	GASKET -	1	-

Ref.	Article N.	Description	Qty	Kit
7	544109201	GASKET -	1	-
8	503200527	SCREW IHSCM -	4	-
9	544870701	DECOMPRESSION VALVE -	1	-
10	503235111	SPARK PLUG -	1	-
11	540057301	SUPPORT -	1	-
12	503552201	PLUG -	1	-
13	544972001	GASKET KIT *Set of Gaskets*	1	-
1	537437906	FUEL TANK ASSY	1	-
2	503212810	SCREW CCRPANT	1	-
3	720182520	PARALLEL PIN	1	-
4	544099701	THROTTLE TRIGGER	1	-
5	544099901	SPRING	1	-
6	544099801	THROTTLE LOCKOUT	1	-
7	531246501	HANDLE INSERT *Grey soft*	1	-
8	504098801	THROTTLE CABLE ASSY	1	-
9	544128601	FUEL HOSE	1	-
10	503443201	FUEL FILTER	1	-
11	544129701	RETURN HOSE	1	-
12	544111203	TANK CAP ASSY	1	-
13	589241101	GASKET	1	-
14	503578901	HOLDER	1	-
15	544375001	LABEL	1	-
16	501007601	SUPPORT	1	-
17	544101201	ANTIVIBRATION ELEMENT	2	-
18	721126339	GROOVED PIN	1	-
19	501152901	TANK VENT ASSY	1	-
1	544083901	FRONT HANDLE -	1	-
2	503218876	SCREW IHSCT -	3	-
3	503210270	SCREW IHSCT -	2	-
4	503898301	ANTIVIBRATION ELEMENT	1	-

Ref.	Article N.	Description	Qty	Kit
		-		
1	544111801	FLYWHEEL ASSY -	1	-
2	537245601	STARTER PAWL -	2	-
3	501819903	SCREW -	2	-
4	503230042	WASHER -	2	-
5	529271101	SPRING -	2	-
6	503220401	NUT -	1	-
7	573935702	IGNITION MODULE -	1	-
8	510101501	WIRING ASSY -	1	-
9	503200220	SCREW IHSCFM -	2	-
1	544147702	MUFFLER ASSY -	1	-
2	579753301	SCREEN -	1	-
3	579753201	HEAT DEFLECTOR -	1	-
4	579753101	GASKET -	1	-
5	725536855	SCREW IHSCM -	2	-
6	724128759	SCREW CRPANM -	1	-
7	544972001	GASKET KIT *Set of Gaskets*	1	-
3	544464502	WINTER KIT *Winter kit*	1	-
4	503217016	SCREW CCRPANT -	2	-
1	544158502	STARTER ASSY -	1	-
2	544158401	STARTER HOUSING -	1	-
3	537283201	SLEEVE -	1	-

Ref.	Article N.	Description	Qty	Kit
4	540057502	SPRING CASSETTE ASSY -	1	-
5	503212810	SCREW CCRPANT -	2	-
6	537423201	STARTER PULLEY -	1	-
7	537423401	SPRING -	1	-
8	537423301	DRIVER -	1	-
9	537426601	SCREW -	1	-
10	505305125	STARTER ROPE -	1	-
11	537232501	STARTER HANDLE -	1	-
12	503217321	SCREW -	4	-
13	544081501	COOLING AIR CONDUCTER -	1	-
14	544377102	LABEL -	1	-

FUEL TANK

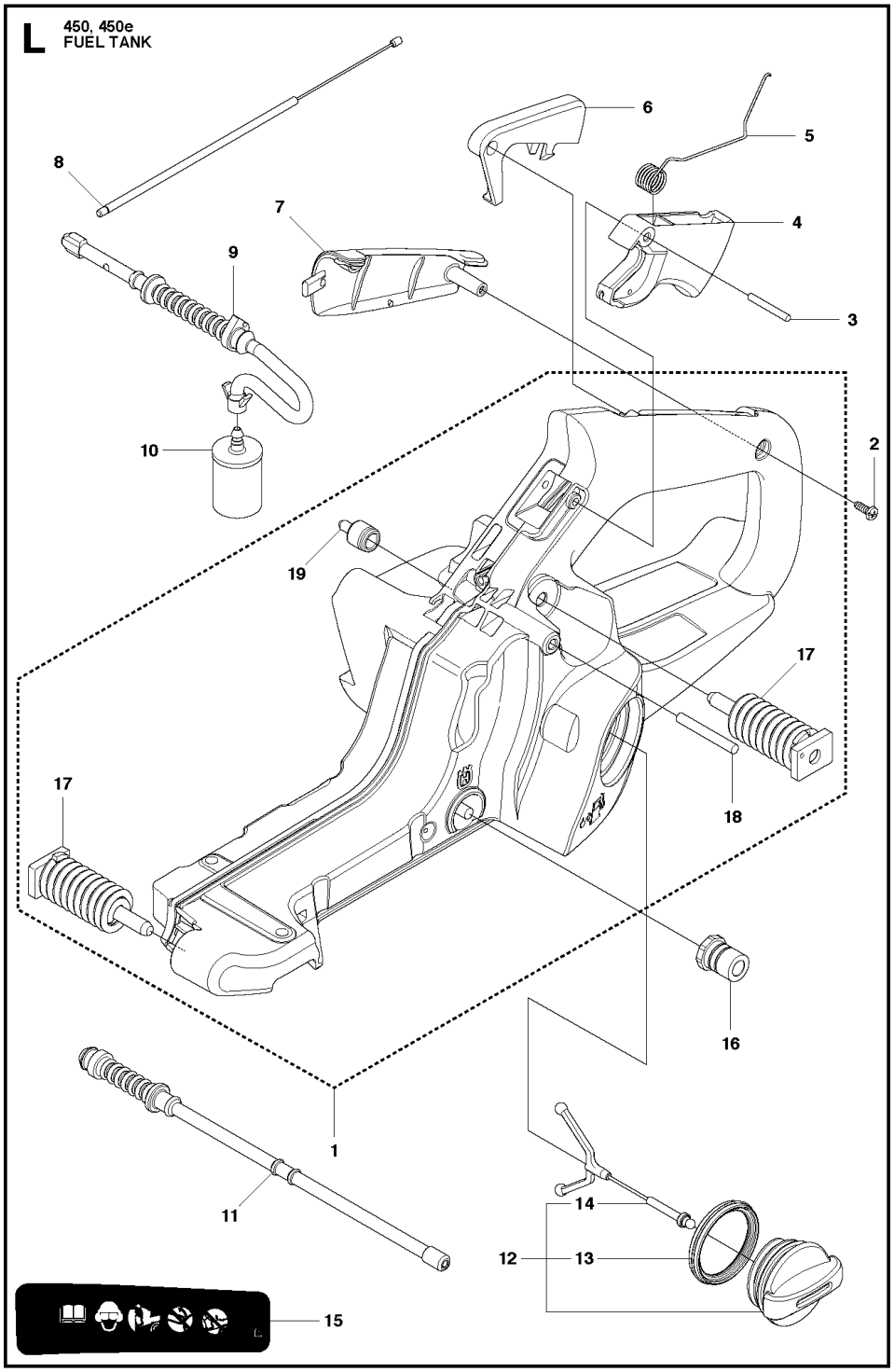

Ref.	Article N.	Description	Qty	Kit
1	501691701	COMBINATION WRENCH -	1	-
1	544082301	PIPE ASSY -	1	-
2	503200216	SCREW IHSCFM -	4	-

Ref.	Article N.	Description	Qty	Kit
3	544083801	INTERMEDATE WALL -	1	-
4	544084001	FLANGE -	1	-
5	503210725	SCREW IHSCFT -	2	-
6	544084101	FLANGE -	1	-
7	544148201	THROTTLE -	1	-
8	506450401	CARBURETTOR *C1M-EL37B*	1	-
9	505514701	FILTER HOLDER ASSY -	1	-
10	544231401	SHACKLE -	1	-
11	503936601	PURGE *air purge*	1	-
12	544401901	HOSE *suction hose*	1	-
13	577535101	RETURN HOSE *return hose*	1	-
14	544359902	CONTROL -	1	-
15	503210750	SCREW IHSCFT -	2	-
16	544080803	AIR FILTER *Felt*	1	-
16	544080802	AIR FILTER *µ 44*	1	-
16	544080801	AIR FILTER *µ 80*	1	-
17	502081001	SHAFT ASSY -	1	-
18	502081101	SPRING -	1	-
19	502080801	COLLAR -	1	-
20	502081201	VALVE -	1	-
21	503481801	SCREW -	1	-
22	537385201	CLIP	1	-

Ref.	Article N.	Description	Qty	Kit
		-		
23	502080901	ROD -	1	-
24	735583000	WASHER -	1	-
1	506450401	CARBURETTOR -	1	-
2	502078201	COLLAR -	1	-
3	502078301	COLLAR -	1	-
4	502078401	SCREW -	1	-
5	502078601	SPRING -	1	-
6	502078701	SPRING -	1	-
7	503479001	SCREW -	1	-
8	503479601	SCREW -	1	-
9	503479701	VALVE -	1	-
10	503480001	PIN RETAINING SCREW -	1	-
11	503480101	SCREW -	1	-
12	503480501	SCREW -	4	-
13	503481101	PIECE -	1	-
14	503481801	SCREW -	2	-
15	503535601	PLUG WELCH -	2	-
16	503535701	STRAINER -	1	-
17	503665901	LEVER -	1	-
18	537020101	GASKET -	1	-
19	537383101	DIAPHRAGM PUMP -	1	-

Ref.	Article N.	Description	Qty	Kit
20	502078901	COVER -	1	-
21	537383301	SCREW -	1	-
22	537383401	SPRING -	1	-
23	537383701	COVER -	1	-
24	544237701	NOZZLE ASSY -	1	-
25	502079001	DIAPHRAGM -	1	-
26	502079101	LEVER -	1	-
27	505101701	LEVER -	1	-
28	502079401	SHAFT ASSY -	1	-
29	502079501	SHAFT ASSY -	1	-
30	502247701	VALVE -	1	-
31	502079801	COLLAR -	1	-
32	537383601	GASKET -	1	-
33	502081701	LEVER -	1	-
34	502079901	SCREW -	1	-
35	502080001	SCREW -	1	-
36	502080101	VALVE -	1	-
37	502080201	GASKET KIT -	1	-
38	544119501	PLUG -	1	-
1	544217205	CLUTCH COVER ASSY *Orange*	1	-
2	504542801	COVER LID	1	-
3	537043001	BRAKE BAND ASSY	1	-
4	544083001	WEAR PROTECTION	1	-

Ref.	Article N.	Description	Qty	Kit
5	503855201	GUIDE BUSHING	1	-
6	503465901	BRAKE SPRING	1	-
7	544082901	COVER LID	1	-
8	503890802	KNEE JOINT ASSY	1	-
9	503892901	PIN	1	-
10	735310820	E-CLIP	1	-
11	537392901	SCREW	1	-
12	537347201	GEAR ASSY	1	-
13	537392601	HEAT PROTECTOR	1	-
14	544357501	LABEL	1	-
15	503217010	SCREW CCRPANT	10	-
16	525354301	BEARING SLEEVE	1	-
17	544250501	WEAR PLATE	1	-
18	537347801	KNOB	1	-
1	537110503	CLUTCH ASSY -	1	-
2	537359101	CLUTCH SPRING -	2	-
3	578097901	CLUTCH DRUM ASSY -	1	-
4	503255201	NEEDLE BEARING -	1	-
5	503931801	WORM WHEEL -	1	-
6	540057901	PUMP PISTON -	1	-
7	537154801	PUMP CYLINDER -	1	-
8	544084202	OIL HOSE -	1	-
1	537438201	CRANKCASE *Orange*	1	-
1	537438205	CRANKCASE *Grey*	1	-
2	503875802	STIFFENING PLATE	1	-
3	503875402	BAR BOLT	1	-
4	537334601	BAR BOLT	1	-
5	544036401	BAR BOLT	1	-
6	503240905	NEEDLE ROLLER	1	-
7	530026119	CHECK VALVE	1	-
8	537403501	FILTER	1	-

Ref.	Article N.	Description	Qty	Kit
9	544083301	OIL SCREEN	1	-
10	544331601	GUIDE PIN	3	-
11	503869301	SUPPORT	2	-
12	544111203	TANK CAP ASSY	1	-
13	589241101	GASKET	1	-
14	503578901	HOLDER	1	-
15	503886301	PIN	1	-
16	503218876	SCREW IHSCT	2	-
17	501007601	SUPPORT	2	-
18	503215103	SCREW IHSCT	1	-
19	544094001	CHAIN GUIDE PLATE	1	-
20	503217010	SCREW CCRPANT	1	-
21	503905901	SPIKE	1	-
22	503217520	SCREW IHSCFT	2	-
23	505422701	HAND GUARD	1	-
24	503892401	LOCK	1	-
25	503893001	SCREW	2	-
26	503436501	POSITION SPRING	1	-
1	525605001	CRANKSHAFT ASSY -	1	-
2	544062001	BEARING -	2	-
3	544013801	SEALING -	2	-
4	503256301	NEEDLE BEARING -	1	-
1	544348303	CYLINDER COVER ASSY	1	-
2	522709201	LABEL	1	-
3	595303001	SNAP LOCKING	3	-
1	544119802	CYLINDER -	1	-
2	544088905	PISTON ASSY -	1	-
3	544088701	PISTON RING -	1	-
4	544211301	CIRCLIP -	1	-
5	503256301	NEEDLE BEARING -	1	-
6	544108701	GASKET -	1	-

Ref.	Article N.	Description	Qty	Kit
7	544109201	GASKET -	1	-
8	503200527	SCREW IHSCM -	4	-
9	544870701	DECOMPRESSION VALVE -	1	-
10	503235111	SPARK PLUG -	1	-
11	540057301	SUPPORT -	1	-
12	503552201	PLUG -	1	-
13	544972001	GASKET KIT *Set of Gaskets*	1	-
1	537437906	FUEL TANK ASSY	1	-
2	503212810	SCREW CCRPANT	1	-
3	720182520	PARALLEL PIN	1	-
4	544099701	THROTTLE TRIGGER	1	-
5	544099901	SPRING	1	-
6	544099801	THROTTLE LOCKOUT	1	-
7	531246501	HANDLE INSERT *Grey soft*	1	-
8	504098801	THROTTLE CABLE ASSY	1	-
9	544128601	FUEL HOSE	1	-
10	503443201	FUEL FILTER	1	-
11	544129701	RETURN HOSE	1	-
12	544111203	TANK CAP ASSY	1	-
13	589241101	GASKET	1	-
14	503578901	HOLDER	1	-
15	544375001	LABEL	1	-
16	501007601	SUPPORT	1	-
17	544101201	ANTIVIBRATION ELEMENT	2	-
18	721126339	GROOVED PIN	1	-
19	501152901	TANK VENT ASSY	1	-
1	544083901	FRONT HANDLE -	1	-
2	503218876	SCREW IHSCT -	3	-
3	503210270	SCREW IHSCT -	2	-
4	503898301	ANTIVIBRATION ELEMENT	1	-

Ref.	Article N.	Description	Qty	Kit
		-		
1	544111801	FLYWHEEL ASSY -	1	-
2	537245601	STARTER PAWL -	2	-
3	501819903	SCREW -	2	-
4	503230042	WASHER -	2	-
5	529271101	SPRING -	2	-
6	503220401	NUT -	1	-
7	573935702	IGNITION MODULE -	1	-
8	510101501	WIRING ASSY -	1	-
9	503200220	SCREW IHSCFM -	2	-
1	544147702	MUFFLER ASSY -	1	-
2	579753301	SCREEN -	1	-
3	579753201	HEAT DEFLECTOR -	1	-
4	579753101	GASKET -	1	-
5	725536855	SCREW IHSCM -	2	-
6	724128759	SCREW CRPANM -	1	-
7	544972001	GASKET KIT *Set of Gaskets*	1	-
3	544464502	WINTER KIT *Winter kit*	1	-
4	503217016	SCREW CCRPANT -	2	-
1	544158502	STARTER ASSY -	1	-
2	544158401	STARTER HOUSING -	1	-
3	537283201	SLEEVE -	1	-

Ref.	Article N.	Description	Qty	Kit
4	540057502	SPRING CASSETTE ASSY -	1	-
5	503212810	SCREW CCRPANT -	2	-
6	537423201	STARTER PULLEY -	1	-
7	537423401	SPRING -	1	-
8	537423301	DRIVER -	1	-
9	537426601	SCREW -	1	-
10	505305125	STARTER ROPE -	1	-
11	537232501	STARTER HANDLE -	1	-
12	503217321	SCREW -	4	-
13	544081501	COOLING AIR CONDUCTER -	1	-
14	544377102	LABEL -	1	-

HANDLE

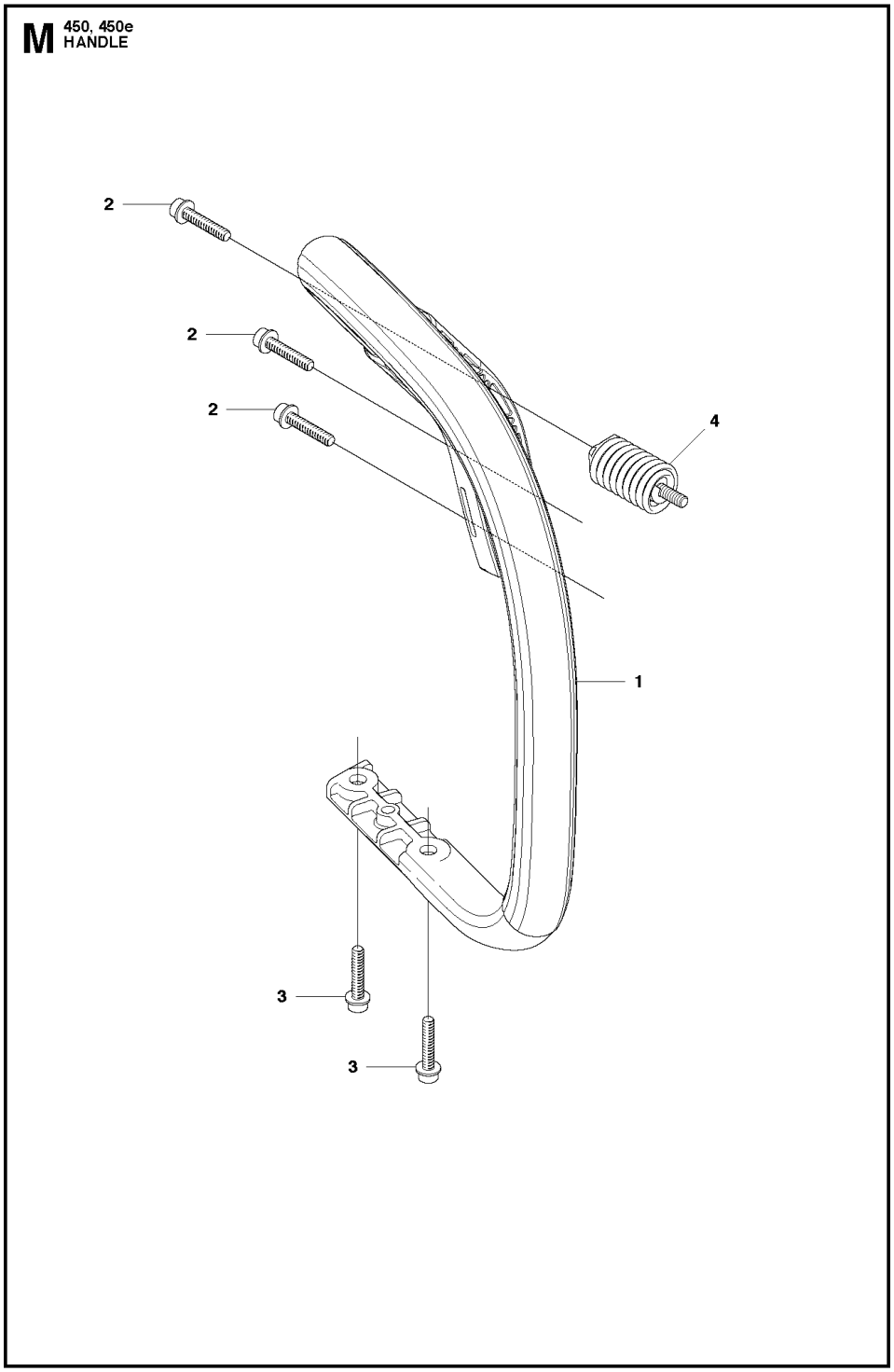

Ref.	Article N.	Description	Qty	Kit
1	501691701	COMBINATION WRENCH -	1	-
1	544082301	PIPE ASSY -	1	-
2	503200216	SCREW IHSCFM -	4	-

Ref.	Article N.	Description	Qty	Kit
3	544083801	INTERMEDATE WALL -	1	-
4	544084001	FLANGE -	1	-
5	503210725	SCREW IHSCFT -	2	-
6	544084101	FLANGE -	1	-
7	544148201	THROTTLE -	1	-
8	506450401	CARBURETTOR *C1M-EL37B*	1	-
9	505514701	FILTER HOLDER ASSY -	1	-
10	544231401	SHACKLE -	1	-
11	503936601	PURGE *air purge*	1	-
12	544401901	HOSE *suction hose*	1	-
13	577535101	RETURN HOSE *return hose*	1	-
14	544359902	CONTROL -	1	-
15	503210750	SCREW IHSCFT -	2	-
16	544080803	AIR FILTER *Felt*	1	-
16	544080802	AIR FILTER *µ 44*	1	-
16	544080801	AIR FILTER *µ 80*	1	-
17	502081001	SHAFT ASSY -	1	-
18	502081101	SPRING -	1	-
19	502080801	COLLAR -	1	-
20	502081201	VALVE -	1	-
21	503481801	SCREW -	1	-
22	537385201	CLIP	1	-

Ref.	Article N.	Description	Qty	Kit
		-		
23	502080901	ROD -	1	-
24	735583000	WASHER -	1	-
1	506450401	CARBURETTOR -	1	-
2	502078201	COLLAR -	1	-
3	502078301	COLLAR -	1	-
4	502078401	SCREW -	1	-
5	502078601	SPRING -	1	-
6	502078701	SPRING -	1	-
7	503479001	SCREW -	1	-
8	503479601	SCREW -	1	-
9	503479701	VALVE -	1	-
10	503480001	PIN RETAINING SCREW -	1	-
11	503480101	SCREW -	1	-
12	503480501	SCREW -	4	-
13	503481101	PIECE -	1	-
14	503481801	SCREW -	2	-
15	503535601	PLUG WELCH -	2	-
16	503535701	STRAINER -	1	-
17	503665901	LEVER -	1	-
18	537020101	GASKET -	1	-
19	537383101	DIAPHRAGM PUMP -	1	-

Ref.	Article N.	Description	Qty	Kit
20	502078901	COVER -	1	-
21	537383301	SCREW -	1	-
22	537383401	SPRING -	1	-
23	537383701	COVER -	1	-
24	544237701	NOZZLE ASSY -	1	-
25	502079001	DIAPHRAGM -	1	-
26	502079101	LEVER -	1	-
27	505101701	LEVER -	1	-
28	502079401	SHAFT ASSY -	1	-
29	502079501	SHAFT ASSY -	1	-
30	502247701	VALVE -	1	-
31	502079801	COLLAR -	1	-
32	537383601	GASKET -	1	-
33	502081701	LEVER -	1	-
34	502079901	SCREW -	1	-
35	502080001	SCREW -	1	-
36	502080101	VALVE -	1	-
37	502080201	GASKET KIT -	1	-
38	544119501	PLUG -	1	-
1	544217205	CLUTCH COVER ASSY *Orange*	1	-
2	504542801	COVER LID	1	-
3	537043001	BRAKE BAND ASSY	1	-
4	544083001	WEAR PROTECTION	1	-

Ref.	Article N.	Description	Qty	Kit
5	503855201	GUIDE BUSHING	1	-
6	503465901	BRAKE SPRING	1	-
7	544082901	COVER LID	1	-
8	503890802	KNEE JOINT ASSY	1	-
9	503892901	PIN	1	-
10	735310820	E-CLIP	1	-
11	537392901	SCREW	1	-
12	537347201	GEAR ASSY	1	-
13	537392601	HEAT PROTECTOR	1	-
14	544357501	LABEL	1	-
15	503217010	SCREW CCRPANT	10	-
16	525354301	BEARING SLEEVE	1	-
17	544250501	WEAR PLATE	1	-
18	537347801	KNOB	1	-
1	537110503	CLUTCH ASSY -	1	-
2	537359101	CLUTCH SPRING -	2	-
3	578097901	CLUTCH DRUM ASSY -	1	-
4	503255201	NEEDLE BEARING -	1	-
5	503931801	WORM WHEEL -	1	-
6	540057901	PUMP PISTON -	1	-
7	537154801	PUMP CYLINDER -	1	-
8	544084202	OIL HOSE -	1	-
1	537438201	CRANKCASE *Orange*	1	-
1	537438205	CRANKCASE *Grey*	1	-
2	503875802	STIFFENING PLATE	1	-
3	503875402	BAR BOLT	1	-
4	537334601	BAR BOLT	1	-
5	544036401	BAR BOLT	1	-
6	503240905	NEEDLE ROLLER	1	-
7	530026119	CHECK VALVE	1	-
8	537403501	FILTER	1	-

Ref.	Article N.	Description	Qty	Kit
9	544083301	OIL SCREEN	1	-
10	544331601	GUIDE PIN	3	-
11	503869301	SUPPORT	2	-
12	544111203	TANK CAP ASSY	1	-
13	589241101	GASKET	1	-
14	503578901	HOLDER	1	-
15	503886301	PIN	1	-
16	503218876	SCREW IHSCT	2	-
17	501007601	SUPPORT	2	-
18	503215103	SCREW IHSCT	1	-
19	544094001	CHAIN GUIDE PLATE	1	-
20	503217010	SCREW CCRPANT	1	-
21	503905901	SPIKE	1	-
22	503217520	SCREW IHSCFT	2	-
23	505422701	HAND GUARD	1	-
24	503892401	LOCK	1	-
25	503893001	SCREW	2	-
26	503436501	POSITION SPRING	1	-
1	525605001	CRANKSHAFT ASSY -	1	-
2	544062001	BEARING -	2	-
3	544013801	SEALING -	2	-
4	503256301	NEEDLE BEARING -	1	-
1	544348303	CYLINDER COVER ASSY	1	-
2	522709201	LABEL	1	-
3	595303001	SNAP LOCKING	3	-
1	544119802	CYLINDER -	1	-
2	544088905	PISTON ASSY -	1	-
3	544088701	PISTON RING -	1	-
4	544211301	CIRCLIP -	1	-
5	503256301	NEEDLE BEARING -	1	-
6	544108701	GASKET -	1	-

Ref.	Article N.	Description	Qty	Kit
7	544109201	GASKET -	1	-
8	503200527	SCREW IHSCM -	4	-
9	544870701	DECOMPRESSION VALVE -	1	-
10	503235111	SPARK PLUG -	1	-
11	540057301	SUPPORT -	1	-
12	503552201	PLUG -	1	-
13	544972001	GASKET KIT *Set of Gaskets*	1	-
1	537437906	FUEL TANK ASSY	1	-
2	503212810	SCREW CCRPANT	1	-
3	720182520	PARALLEL PIN	1	-
4	544099701	THROTTLE TRIGGER	1	-
5	544099901	SPRING	1	-
6	544099801	THROTTLE LOCKOUT	1	-
7	531246501	HANDLE INSERT *Grey soft*	1	-
8	504098801	THROTTLE CABLE ASSY	1	-
9	544128601	FUEL HOSE	1	-
10	503443201	FUEL FILTER	1	-
11	544129701	RETURN HOSE	1	-
12	544111203	TANK CAP ASSY	1	-
13	589241101	GASKET	1	-
14	503578901	HOLDER	1	-
15	544375001	LABEL	1	-
16	501007601	SUPPORT	1	-
17	544101201	ANTIVIBRATION ELEMENT	2	-
18	721126339	GROOVED PIN	1	-
19	501152901	TANK VENT ASSY	1	-
1	544083901	FRONT HANDLE -	1	-
2	503218876	SCREW IHSCT -	3	-
3	503210270	SCREW IHSCT -	2	-
4	503898301	ANTIVIBRATION ELEMENT	1	-

Ref.	Article N.	Description	Qty	Kit
		-		
1	544111801	FLYWHEEL ASSY -	1	-
2	537245601	STARTER PAWL -	2	-
3	501819903	SCREW -	2	-
4	503230042	WASHER -	2	-
5	529271101	SPRING -	2	-
6	503220401	NUT -	1	-
7	573935702	IGNITION MODULE -	1	-
8	510101501	WIRING ASSY -	1	-
9	503200220	SCREW IHSCFM -	2	-
1	544147702	MUFFLER ASSY -	1	-
2	579753301	SCREEN -	1	-
3	579753201	HEAT DEFLECTOR -	1	-
4	579753101	GASKET -	1	-
5	725536855	SCREW IHSCM -	2	-
6	724128759	SCREW CRPANM -	1	-
7	544972001	GASKET KIT *Set of Gaskets*	1	-
3	544464502	WINTER KIT *Winter kit*	1	-
4	503217016	SCREW CCRPANT -	2	-
1	544158502	STARTER ASSY -	1	-
2	544158401	STARTER HOUSING -	1	-
3	537283201	SLEEVE -	1	-

Ref.	Article N.	Description	Qty	Kit
4	540057502	SPRING CASSETTE ASSY -	1	-
5	503212810	SCREW CCRPANT -	2	-
6	537423201	STARTER PULLEY -	1	-
7	537423401	SPRING -	1	-
8	537423301	DRIVER -	1	-
9	537426601	SCREW -	1	-
10	505305125	STARTER ROPE -	1	-
11	537232501	STARTER HANDLE -	1	-
12	503217321	SCREW -	4	-
13	544081501	COOLING AIR CONDUCTER -	1	-
14	544377102	LABEL -	1	-

IGNITION SYSTEM

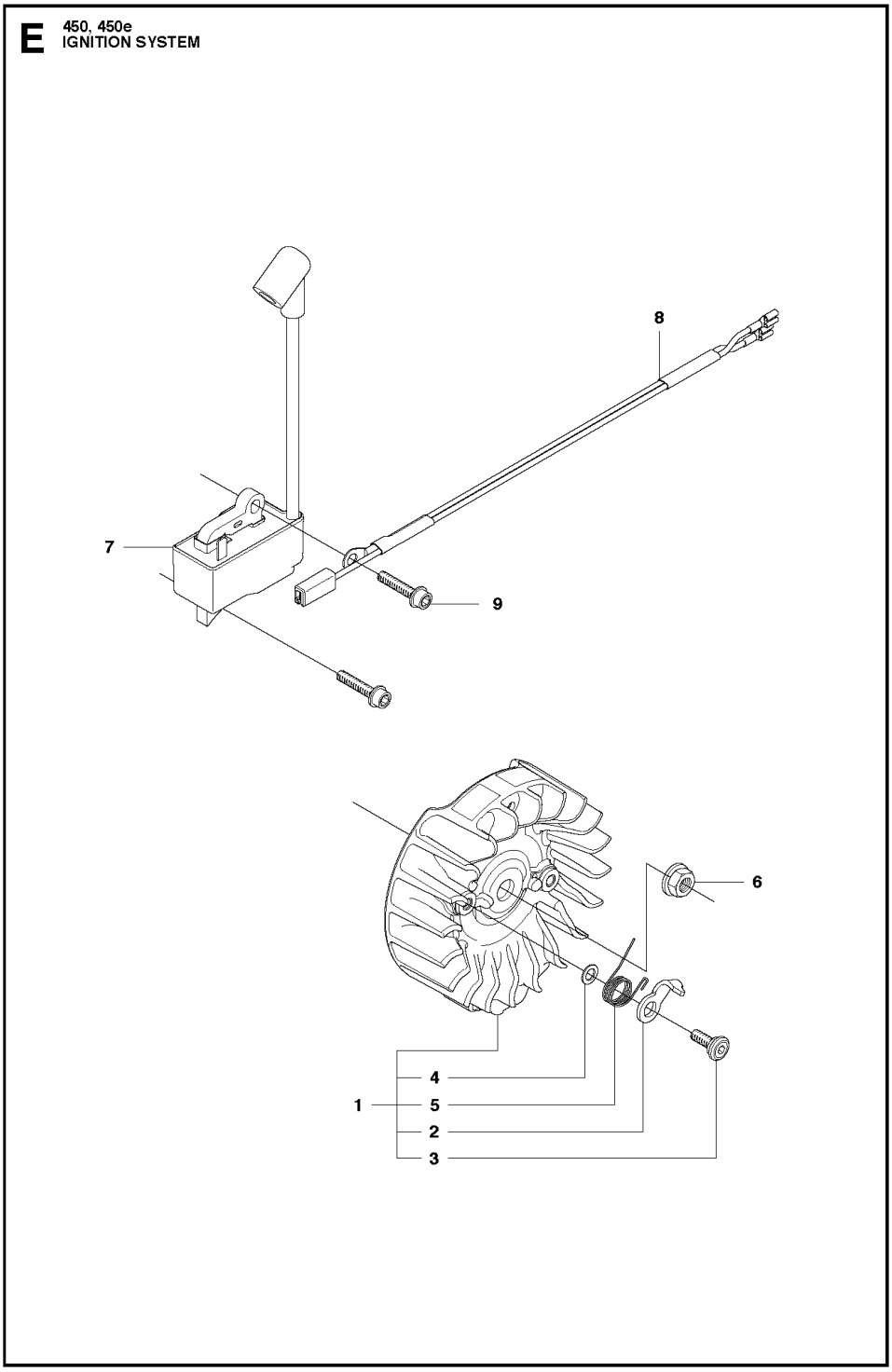

Ref.	Article N.	Description	Qty	Kit
1	501691701	COMBINATION WRENCH -	1	-
1	544082301	PIPE ASSY -	1	-
2	503200216	SCREW IHSCFM -	4	-

Ref.	Article N.	Description	Qty	Kit
3	544083801	INTERMEDATE WALL -	1	-
4	544084001	FLANGE -	1	-
5	503210725	SCREW IHSCFT -	2	-
6	544084101	FLANGE -	1	-
7	544148201	THROTTLE -	1	-
8	506450401	CARBURETTOR *C1M-EL37B*	1	-
9	505514701	FILTER HOLDER ASSY -	1	-
10	544231401	SHACKLE -	1	-
11	503936601	PURGE *air purge*	1	-
12	544401901	HOSE *suction hose*	1	-
13	577535101	RETURN HOSE *return hose*	1	-
14	544359902	CONTROL -	1	-
15	503210750	SCREW IHSCFT -	2	-
16	544080803	AIR FILTER *Felt*	1	-
16	544080802	AIR FILTER *µ 44*	1	-
16	544080801	AIR FILTER *µ 80*	1	-
17	502081001	SHAFT ASSY -	1	-
18	502081101	SPRING -	1	-
19	502080801	COLLAR -	1	-
20	502081201	VALVE -	1	-
21	503481801	SCREW -	1	-
22	537385201	CLIP	1	-

Ref.	Article N.	Description	Qty	Kit
		-		
23	502080901	ROD -	1	-
24	735583000	WASHER -	1	-
1	506450401	CARBURETTOR -	1	-
2	502078201	COLLAR -	1	-
3	502078301	COLLAR -	1	-
4	502078401	SCREW -	1	-
5	502078601	SPRING -	1	-
6	502078701	SPRING -	1	-
7	503479001	SCREW -	1	-
8	503479601	SCREW -	1	-
9	503479701	VALVE -	1	-
10	503480001	PIN RETAINING SCREW -	1	-
11	503480101	SCREW -	1	-
12	503480501	SCREW -	4	-
13	503481101	PIECE -	1	-
14	503481801	SCREW -	2	-
15	503535601	PLUG WELCH -	2	-
16	503535701	STRAINER -	1	-
17	503665901	LEVER -	1	-
18	537020101	GASKET -	1	-
19	537383101	DIAPHRAGM PUMP -	1	-

Ref.	Article N.	Description	Qty	Kit
20	502078901	COVER -	1	-
21	537383301	SCREW -	1	-
22	537383401	SPRING -	1	-
23	537383701	COVER -	1	-
24	544237701	NOZZLE ASSY -	1	-
25	502079001	DIAPHRAGM -	1	-
26	502079101	LEVER -	1	-
27	505101701	LEVER -	1	-
28	502079401	SHAFT ASSY -	1	-
29	502079501	SHAFT ASSY -	1	-
30	502247701	VALVE -	1	-
31	502079801	COLLAR -	1	-
32	537383601	GASKET -	1	-
33	502081701	LEVER -	1	-
34	502079901	SCREW -	1	-
35	502080001	SCREW -	1	-
36	502080101	VALVE -	1	-
37	502080201	GASKET KIT -	1	-
38	544119501	PLUG -	1	-
1	544217205	CLUTCH COVER ASSY *Orange*	1	-
2	504542801	COVER LID	1	-
3	537043001	BRAKE BAND ASSY	1	-
4	544083001	WEAR PROTECTION	1	-

Ref.	Article N.	Description	Qty	Kit
5	503855201	GUIDE BUSHING	1	-
6	503465901	BRAKE SPRING	1	-
7	544082901	COVER LID	1	-
8	503890802	KNEE JOINT ASSY	1	-
9	503892901	PIN	1	-
10	735310820	E-CLIP	1	-
11	537392901	SCREW	1	-
12	537347201	GEAR ASSY	1	-
13	537392601	HEAT PROTECTOR	1	-
14	544357501	LABEL	1	-
15	503217010	SCREW CCRPANT	10	-
16	525354301	BEARING SLEEVE	1	-
17	544250501	WEAR PLATE	1	-
18	537347801	KNOB	1	-
1	537110503	CLUTCH ASSY -	1	-
2	537359101	CLUTCH SPRING -	2	-
3	578097901	CLUTCH DRUM ASSY -	1	-
4	503255201	NEEDLE BEARING -	1	-
5	503931801	WORM WHEEL -	1	-
6	540057901	PUMP PISTON -	1	-
7	537154801	PUMP CYLINDER -	1	-
8	544084202	OIL HOSE -	1	-
1	537438201	CRANKCASE *Orange*	1	-
1	537438205	CRANKCASE *Grey*	1	-
2	503875802	STIFFENING PLATE	1	-
3	503875402	BAR BOLT	1	-
4	537334601	BAR BOLT	1	-
5	544036401	BAR BOLT	1	-
6	503240905	NEEDLE ROLLER	1	-
7	530026119	CHECK VALVE	1	-
8	537403501	FILTER	1	-

Ref.	Article N.	Description	Qty	Kit
9	544083301	OIL SCREEN	1	-
10	544331601	GUIDE PIN	3	-
11	503869301	SUPPORT	2	-
12	544111203	TANK CAP ASSY	1	-
13	589241101	GASKET	1	-
14	503578901	HOLDER	1	-
15	503886301	PIN	1	-
16	503218876	SCREW IHSCT	2	-
17	501007601	SUPPORT	2	-
18	503215103	SCREW IHSCT	1	-
19	544094001	CHAIN GUIDE PLATE	1	-
20	503217010	SCREW CCRPANT	1	-
21	503905901	SPIKE	1	-
22	503217520	SCREW IHSCFT	2	-
23	505422701	HAND GUARD	1	-
24	503892401	LOCK	1	-
25	503893001	SCREW	2	-
26	503436501	POSITION SPRING	1	-
1	525605001	CRANKSHAFT ASSY -	1	-
2	544062001	BEARING -	2	-
3	544013801	SEALING -	2	-
4	503256301	NEEDLE BEARING -	1	-
1	544348303	CYLINDER COVER ASSY	1	-
2	522709201	LABEL	1	-
3	595303001	SNAP LOCKING	3	-
1	544119802	CYLINDER -	1	-
2	544088905	PISTON ASSY -	1	-
3	544088701	PISTON RING -	1	-
4	544211301	CIRCLIP -	1	-
5	503256301	NEEDLE BEARING -	1	-
6	544108701	GASKET -	1	-

Ref.	Article N.	Description	Qty	Kit
7	544109201	GASKET -	1	-
8	503200527	SCREW IHSCM -	4	-
9	544870701	DECOMPRESSION VALVE -	1	-
10	503235111	SPARK PLUG -	1	-
11	540057301	SUPPORT -	1	-
12	503552201	PLUG -	1	-
13	544972001	GASKET KIT *Set of Gaskets*	1	-
1	537437906	FUEL TANK ASSY	1	-
2	503212810	SCREW CCRPANT	1	-
3	720182520	PARALLEL PIN	1	-
4	544099701	THROTTLE TRIGGER	1	-
5	544099901	SPRING	1	-
6	544099801	THROTTLE LOCKOUT	1	-
7	531246501	HANDLE INSERT *Grey soft*	1	-
8	504098801	THROTTLE CABLE ASSY	1	-
9	544128601	FUEL HOSE	1	-
10	503443201	FUEL FILTER	1	-
11	544129701	RETURN HOSE	1	-
12	544111203	TANK CAP ASSY	1	-
13	589241101	GASKET	1	-
14	503578901	HOLDER	1	-
15	544375001	LABEL	1	-
16	501007601	SUPPORT	1	-
17	544101201	ANTIVIBRATION ELEMENT	2	-
18	721126339	GROOVED PIN	1	-
19	501152901	TANK VENT ASSY	1	-
1	544083901	FRONT HANDLE -	1	-
2	503218876	SCREW IHSCT -	3	-
3	503210270	SCREW IHSCT -	2	-
4	503898301	ANTIVIBRATION ELEMENT	1	-

Ref.	Article N.	Description	Qty	Kit
		-		
1	544111801	FLYWHEEL ASSY -	1	-
2	537245601	STARTER PAWL -	2	-
3	501819903	SCREW -	2	-
4	503230042	WASHER -	2	-
5	529271101	SPRING -	2	-
6	503220401	NUT -	1	-
7	573935702	IGNITION MODULE -	1	-
8	510101501	WIRING ASSY -	1	-
9	503200220	SCREW IHSCFM -	2	-
1	544147702	MUFFLER ASSY -	1	-
2	579753301	SCREEN -	1	-
3	579753201	HEAT DEFLECTOR -	1	-
4	579753101	GASKET -	1	-
5	725536855	SCREW IHSCM -	2	-
6	724128759	SCREW CRPANM -	1	-
7	544972001	GASKET KIT *Set of Gaskets*	1	-
3	544464502	WINTER KIT *Winter kit*	1	-
4	503217016	SCREW CCRPANT -	2	-
1	544158502	STARTER ASSY -	1	-
2	544158401	STARTER HOUSING -	1	-
3	537283201	SLEEVE -	1	-

Ref.	Article N.	Description	Qty	Kit
4	540057502	SPRING CASSETTE ASSY -	1	-
5	503212810	SCREW CCRPANT -	2	-
6	537423201	STARTER PULLEY -	1	-
7	537423401	SPRING -	1	-
8	537423301	DRIVER -	1	-
9	537426601	SCREW -	1	-
10	505305125	STARTER ROPE -	1	-
11	537232501	STARTER HANDLE -	1	-
12	503217321	SCREW -	4	-
13	544081501	COOLING AIR CONDUCTER -	1	-
14	544377102	LABEL -	1	-

MUFFLER

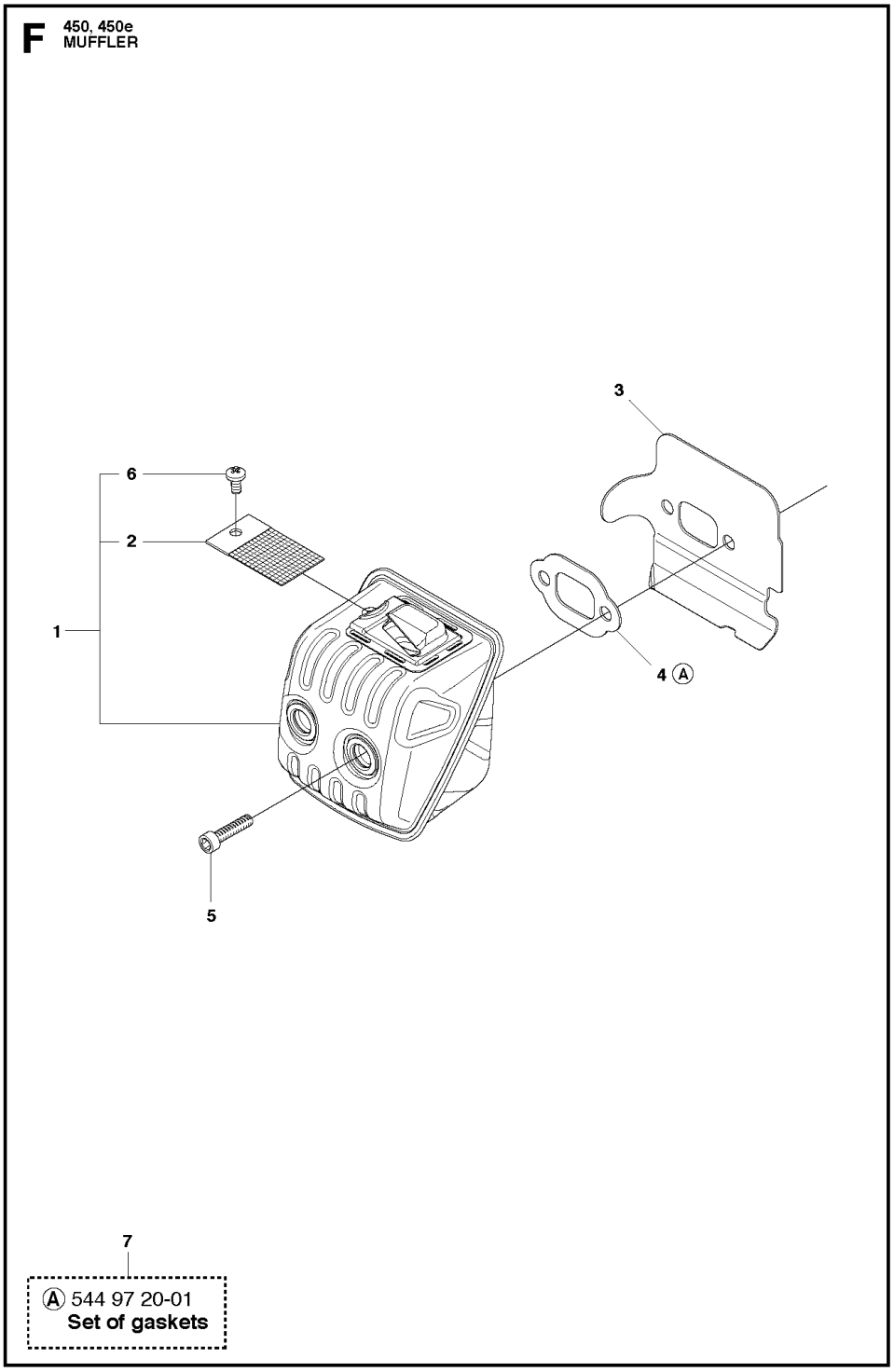

Ref.	Article N.	Description	Qty	Kit
1	501691701	COMBINATION WRENCH -	1	-
1	544082301	PIPE ASSY -	1	-
2	503200216	SCREW IHSCFM -	4	-

Ref.	Article N.	Description	Qty	Kit
3	544083801	INTERMEDATE WALL -	1	-
4	544084001	FLANGE -	1	-
5	503210725	SCREW IHSCFT -	2	-
6	544084101	FLANGE -	1	-
7	544148201	THROTTLE -	1	-
8	506450401	CARBURETTOR *C1M-EL37B*	1	-
9	505514701	FILTER HOLDER ASSY -	1	-
10	544231401	SHACKLE -	1	-
11	503936601	PURGE *air purge*	1	-
12	544401901	HOSE *suction hose*	1	-
13	577535101	RETURN HOSE *return hose*	1	-
14	544359902	CONTROL -	1	-
15	503210750	SCREW IHSCFT -	2	-
16	544080803	AIR FILTER *Felt*	1	-
16	544080802	AIR FILTER *µ 44*	1	-
16	544080801	AIR FILTER *µ 80*	1	-
17	502081001	SHAFT ASSY -	1	-
18	502081101	SPRING -	1	-
19	502080801	COLLAR -	1	-
20	502081201	VALVE -	1	-
21	503481801	SCREW -	1	-
22	537385201	CLIP	1	-

Ref.	Article N.	Description	Qty	Kit
		-		
23	502080901	ROD -	1	-
24	735583000	WASHER -	1	-
1	506450401	CARBURETTOR -	1	-
2	502078201	COLLAR -	1	-
3	502078301	COLLAR -	1	-
4	502078401	SCREW -	1	-
5	502078601	SPRING -	1	-
6	502078701	SPRING -	1	-
7	503479001	SCREW -	1	-
8	503479601	SCREW -	1	-
9	503479701	VALVE -	1	-
10	503480001	PIN RETAINING SCREW -	1	-
11	503480101	SCREW -	1	-
12	503480501	SCREW -	4	-
13	503481101	PIECE -	1	-
14	503481801	SCREW -	2	-
15	503535601	PLUG WELCH -	2	-
16	503535701	STRAINER -	1	-
17	503665901	LEVER -	1	-
18	537020101	GASKET -	1	-
19	537383101	DIAPHRAGM PUMP -	1	-

Ref.	Article N.	Description	Qty	Kit
20	502078901	COVER -	1	-
21	537383301	SCREW -	1	-
22	537383401	SPRING -	1	-
23	537383701	COVER -	1	-
24	544237701	NOZZLE ASSY -	1	-
25	502079001	DIAPHRAGM -	1	-
26	502079101	LEVER -	1	-
27	505101701	LEVER -	1	-
28	502079401	SHAFT ASSY -	1	-
29	502079501	SHAFT ASSY -	1	-
30	502247701	VALVE -	1	-
31	502079801	COLLAR -	1	-
32	537383601	GASKET -	1	-
33	502081701	LEVER -	1	-
34	502079901	SCREW -	1	-
35	502080001	SCREW -	1	-
36	502080101	VALVE -	1	-
37	502080201	GASKET KIT -	1	-
38	544119501	PLUG -	1	-
1	544217205	CLUTCH COVER ASSY *Orange*	1	-
2	504542801	COVER LID	1	-
3	537043001	BRAKE BAND ASSY	1	-
4	544083001	WEAR PROTECTION	1	-

Ref.	Article N.	Description	Qty	Kit
5	503855201	GUIDE BUSHING	1	-
6	503465901	BRAKE SPRING	1	-
7	544082901	COVER LID	1	-
8	503890802	KNEE JOINT ASSY	1	-
9	503892901	PIN	1	-
10	735310820	E-CLIP	1	-
11	537392901	SCREW	1	-
12	537347201	GEAR ASSY	1	-
13	537392601	HEAT PROTECTOR	1	-
14	544357501	LABEL	1	-
15	503217010	SCREW CCRPANT	10	-
16	525354301	BEARING SLEEVE	1	-
17	544250501	WEAR PLATE	1	-
18	537347801	KNOB	1	-
1	537110503	CLUTCH ASSY -	1	-
2	537359101	CLUTCH SPRING -	2	-
3	578097901	CLUTCH DRUM ASSY -	1	-
4	503255201	NEEDLE BEARING -	1	-
5	503931801	WORM WHEEL -	1	-
6	540057901	PUMP PISTON -	1	-
7	537154801	PUMP CYLINDER -	1	-
8	544084202	OIL HOSE -	1	-
1	537438201	CRANKCASE *Orange*	1	-
1	537438205	CRANKCASE *Grey*	1	-
2	503875802	STIFFENING PLATE	1	-
3	503875402	BAR BOLT	1	-
4	537334601	BAR BOLT	1	-
5	544036401	BAR BOLT	1	-
6	503240905	NEEDLE ROLLER	1	-
7	530026119	CHECK VALVE	1	-
8	537403501	FILTER	1	-

Ref.	Article N.	Description	Qty	Kit
9	544083301	OIL SCREEN	1	-
10	544331601	GUIDE PIN	3	-
11	503869301	SUPPORT	2	-
12	544111203	TANK CAP ASSY	1	-
13	589241101	GASKET	1	-
14	503578901	HOLDER	1	-
15	503886301	PIN	1	-
16	503218876	SCREW IHSCT	2	-
17	501007601	SUPPORT	2	-
18	503215103	SCREW IHSCT	1	-
19	544094001	CHAIN GUIDE PLATE	1	-
20	503217010	SCREW CCRPANT	1	-
21	503905901	SPIKE	1	-
22	503217520	SCREW IHSCFT	2	-
23	505422701	HAND GUARD	1	-
24	503892401	LOCK	1	-
25	503893001	SCREW	2	-
26	503436501	POSITION SPRING	1	-
1	525605001	CRANKSHAFT ASSY -	1	-
2	544062001	BEARING -	2	-
3	544013801	SEALING -	2	-
4	503256301	NEEDLE BEARING -	1	-
1	544348303	CYLINDER COVER ASSY	1	-
2	522709201	LABEL	1	-
3	595303001	SNAP LOCKING	3	-
1	544119802	CYLINDER -	1	-
2	544088905	PISTON ASSY -	1	-
3	544088701	PISTON RING -	1	-
4	544211301	CIRCLIP -	1	-
5	503256301	NEEDLE BEARING -	1	-
6	544108701	GASKET -	1	-

Ref.	Article N.	Description	Qty	Kit
7	544109201	GASKET -	1	-
8	503200527	SCREW IHSCM -	4	-
9	544870701	DECOMPRESSION VALVE -	1	-
10	503235111	SPARK PLUG -	1	-
11	540057301	SUPPORT -	1	-
12	503552201	PLUG -	1	-
13	544972001	GASKET KIT *Set of Gaskets*	1	-
1	537437906	FUEL TANK ASSY	1	-
2	503212810	SCREW CCRPANT	1	-
3	720182520	PARALLEL PIN	1	-
4	544099701	THROTTLE TRIGGER	1	-
5	544099901	SPRING	1	-
6	544099801	THROTTLE LOCKOUT	1	-
7	531246501	HANDLE INSERT *Grey soft*	1	-
8	504098801	THROTTLE CABLE ASSY	1	-
9	544128601	FUEL HOSE	1	-
10	503443201	FUEL FILTER	1	-
11	544129701	RETURN HOSE	1	-
12	544111203	TANK CAP ASSY	1	-
13	589241101	GASKET	1	-
14	503578901	HOLDER	1	-
15	544375001	LABEL	1	-
16	501007601	SUPPORT	1	-
17	544101201	ANTIVIBRATION ELEMENT	2	-
18	721126339	GROOVED PIN	1	-
19	501152901	TANK VENT ASSY	1	-
1	544083901	FRONT HANDLE -	1	-
2	503218876	SCREW IHSCT -	3	-
3	503210270	SCREW IHSCT -	2	-
4	503898301	ANTIVIBRATION ELEMENT	1	-

Ref.	Article N.	Description	Qty	Kit
		-		
1	544111801	FLYWHEEL ASSY -	1	-
2	537245601	STARTER PAWL -	2	-
3	501819903	SCREW -	2	-
4	503230042	WASHER -	2	-
5	529271101	SPRING -	2	-
6	503220401	NUT -	1	-
7	573935702	IGNITION MODULE -	1	-
8	510101501	WIRING ASSY -	1	-
9	503200220	SCREW IHSCFM -	2	-
1	544147702	MUFFLER ASSY -	1	-
2	579753301	SCREEN -	1	-
3	579753201	HEAT DEFLECTOR -	1	-
4	579753101	GASKET -	1	-
5	725536855	SCREW IHSCM -	2	-
6	724128759	SCREW CRPANM -	1	-
7	544972001	GASKET KIT *Set of Gaskets*	1	-
3	544464502	WINTER KIT *Winter kit*	1	-
4	503217016	SCREW CCRPANT -	2	-
1	544158502	STARTER ASSY -	1	-
2	544158401	STARTER HOUSING -	1	-
3	537283201	SLEEVE -	1	-

Ref.	Article N.	Description	Qty	Kit
4	540057502	SPRING CASSETTE ASSY -	1	-
5	503212810	SCREW CCRPANT -	2	-
6	537423201	STARTER PULLEY -	1	-
7	537423401	SPRING -	1	-
8	537423301	DRIVER -	1	-
9	537426601	SCREW -	1	-
10	505305125	STARTER ROPE -	1	-
11	537232501	STARTER HANDLE -	1	-
12	503217321	SCREW -	4	-
13	544081501	COOLING AIR CONDUCTER -	1	-
14	544377102	LABEL -	1	-

WINTER KIT

Q 450e WINTER KIT

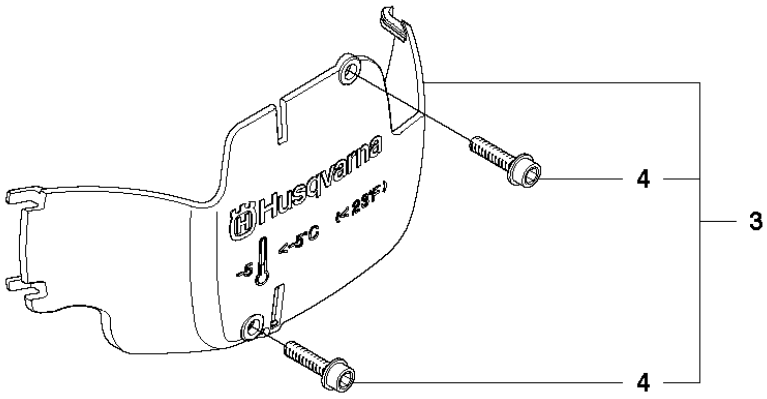

Ref.	Article N.	Description	Qty	Kit
1	501691701	COMBINATION WRENCH -	1	-
1	544082301	PIPE ASSY -	1	-
2	503200216	SCREW IHSCFM -	4	-
3	544083801	INTERMEDATE WALL -	1	-
4	544084001	FLANGE -	1	-
5	503210725	SCREW IHSCFT -	2	-
6	544084101	FLANGE -	1	-
7	544148201	THROTTLE -	1	-
8	506450401	CARBURETTOR *C1M-EL37B*	1	-

Ref.	Article N.	Description	Qty	Kit
9	505514701	FILTER HOLDER ASSY -	1	-
10	544231401	SHACKLE -	1	-
11	503936601	PURGE *air purge*	1	-
12	544401901	HOSE *suction hose*	1	-
13	577535101	RETURN HOSE *return hose*	1	-
14	544359902	CONTROL -	1	-
15	503210750	SCREW IHSCFT -	2	-
16	544080803	AIR FILTER *Felt*	1	-
16	544080802	AIR FILTER *µ 44*	1	-
16	544080801	AIR FILTER *µ 80*	1	-
17	502081001	SHAFT ASSY -	1	-
18	502081101	SPRING -	1	-
19	502080801	COLLAR -	1	-
20	502081201	VALVE -	1	-
21	503481801	SCREW -	1	-
22	537385201	CLIP -	1	-
23	502080901	ROD -	1	-
24	735583000	WASHER -	1	-
1	506450401	CARBURETTOR -	1	-
2	502078201	COLLAR -	1	-
3	502078301	COLLAR -	1	-
4	502078401	SCREW	1	-

Ref.	Article N.	Description	Qty	Kit
		-		
5	502078601	SPRING -	1	-
6	502078701	SPRING -	1	-
7	503479001	SCREW -	1	-
8	503479601	SCREW -	1	-
9	503479701	VALVE -	1	-
10	503480001	PIN RETAINING SCREW -	1	-
11	503480101	SCREW -	1	-
12	503480501	SCREW -	4	-
13	503481101	PIECE -	1	-
14	503481801	SCREW -	2	-
15	503535601	PLUG WELCH -	2	-
16	503535701	STRAINER -	1	-
17	503665901	LEVER -	1	-
18	537020101	GASKET -	1	-
19	537383101	DIAPHRAGM PUMP -	1	-
20	502078901	COVER -	1	-
21	537383301	SCREW -	1	-
22	537383401	SPRING -	1	-
23	537383701	COVER -	1	-
24	544237701	NOZZLE ASSY -	1	-
25	502079001	DIAPHRAGM -	1	-

Ref.	Article N.	Description	Qty	Kit
26	502079101	LEVER -	1	-
27	505101701	LEVER -	1	-
28	502079401	SHAFT ASSY -	1	-
29	502079501	SHAFT ASSY -	1	-
30	502247701	VALVE -	1	-
31	502079801	COLLAR -	1	-
32	537383601	GASKET -	1	-
33	502081701	LEVER -	1	-
34	502079901	SCREW -	1	-
35	502080001	SCREW -	1	-
36	502080101	VALVE -	1	-
37	502080201	GASKET KIT -	1	-
38	544119501	PLUG -	1	-
1	544217205	CLUTCH COVER ASSY *Orange*	1	-
2	504542801	COVER LID	1	-
3	537043001	BRAKE BAND ASSY	1	-
4	544083001	WEAR PROTECTION	1	-
5	503855201	GUIDE BUSHING	1	-
6	503465901	BRAKE SPRING	1	-
7	544082901	COVER LID	1	-
8	503890802	KNEE JOINT ASSY	1	-
9	503892901	PIN	1	-
10	735310820	E-CLIP	1	-
11	537392901	SCREW	1	-
12	537347201	GEAR ASSY	1	-
13	537392601	HEAT PROTECTOR	1	-
14	544357501	LABEL	1	-

Ref.	Article N.	Description	Qty	Kit
15	503217010	SCREW CCRPANT	10	-
16	525354301	BEARING SLEEVE	1	-
17	544250501	WEAR PLATE	1	-
18	537347801	KNOB	1	-
1	537110503	CLUTCH ASSY -	1	-
2	537359101	CLUTCH SPRING -	2	-
3	578097901	CLUTCH DRUM ASSY -	1	-
4	503255201	NEEDLE BEARING -	1	-
5	503931801	WORM WHEEL -	1	-
6	540057901	PUMP PISTON -	1	-
7	537154801	PUMP CYLINDER -	1	-
8	544084202	OIL HOSE -	1	-
1	537438201	CRANKCASE *Orange*	1	-
1	537438205	CRANKCASE *Grey*	1	-
2	503875802	STIFFENING PLATE	1	-
3	503875402	BAR BOLT	1	-
4	537334601	BAR BOLT	1	-
5	544036401	BAR BOLT	1	-
6	503240905	NEEDLE ROLLER	1	-
7	530026119	CHECK VALVE	1	-
8	537403501	FILTER	1	-
9	544083301	OIL SCREEN	1	-
10	544331601	GUIDE PIN	3	-
11	503869301	SUPPORT	2	-
12	544111203	TANK CAP ASSY	1	-
13	589241101	GASKET	1	-
14	503578901	HOLDER	1	-
15	503886301	PIN	1	-
16	503218876	SCREW IHSCT	2	-
17	501007601	SUPPORT	2	-
18	503215103	SCREW IHSCT	1	-

Ref.	Article N.	Description	Qty	Kit
19	544094001	CHAIN GUIDE PLATE	1	-
20	503217010	SCREW CCRPANT	1	-
21	503905901	SPIKE	1	-
22	503217520	SCREW IHSCFT	2	-
23	505422701	HAND GUARD	1	-
24	503892401	LOCK	1	-
25	503893001	SCREW	2	-
26	503436501	POSITION SPRING	1	-
1	525605001	CRANKSHAFT ASSY -	1	-
2	544062001	BEARING -	2	-
3	544013801	SEALING -	2	-
4	503256301	NEEDLE BEARING -	1	-
1	544348303	CYLINDER COVER ASSY	1	-
2	522709201	LABEL	1	-
3	595303001	SNAP LOCKING	3	-
1	544119802	CYLINDER -	1	-
2	544088905	PISTON ASSY -	1	-
3	544088701	PISTON RING -	1	-
4	544211301	CIRCLIP -	1	-
5	503256301	NEEDLE BEARING -	1	-
6	544108701	GASKET -	1	-
7	544109201	GASKET -	1	-
8	503200527	SCREW IHSCM -	4	-
9	544870701	DECOMPRESSION VALVE -	1	-
10	503235111	SPARK PLUG -	1	-
11	540057301	SUPPORT -	1	-
12	503552201	PLUG	1	-

Ref.	Article N.	Description	Qty	Kit
		-		
13	544972001	GASKET KIT *Set of Gaskets*	1	-
1	537437906	FUEL TANK ASSY	1	-
2	503212810	SCREW CCRPANT	1	-
3	720182520	PARALLEL PIN	1	-
4	544099701	THROTTLE TRIGGER	1	-
5	544099901	SPRING	1	-
6	544099801	THROTTLE LOCKOUT	1	-
7	531246501	HANDLE INSERT *Grey soft*	1	-
8	504098801	THROTTLE CABLE ASSY	1	-
9	544128601	FUEL HOSE	1	-
10	503443201	FUEL FILTER	1	-
11	544129701	RETURN HOSE	1	-
12	544111203	TANK CAP ASSY	1	-
13	589241101	GASKET	1	-
14	503578901	HOLDER	1	-
15	544375001	LABEL	1	-
16	501007601	SUPPORT	1	-
17	544101201	ANTIVIBRATION ELEMENT	2	-
18	721126339	GROOVED PIN	1	-
19	501152901	TANK VENT ASSY	1	-
1	544083901	FRONT HANDLE -	1	-
2	503218876	SCREW IHSCT -	3	-
3	503210270	SCREW IHSCT -	2	-
4	503898301	ANTIVIBRATION ELEMENT -	1	-
1	544111801	FLYWHEEL ASSY -	1	-
2	537245601	STARTER PAWL -	2	-
3	501819903	SCREW -	2	-
4	503230042	WASHER -	2	-
5	529271101	SPRING -	2	-

Ref.	Article N.	Description	Qty	Kit
6	503220401	NUT -	1	-
7	573935702	IGNITION MODULE -	1	-
8	510101501	WIRING ASSY -	1	-
9	503200220	SCREW IHSCFM -	2	-
1	544147702	MUFFLER ASSY -	1	-
2	579753301	SCREEN -	1	-
3	579753201	HEAT DEFLECTOR -	1	-
4	579753101	GASKET -	1	-
5	725536855	SCREW IHSCM -	2	-
6	724128759	SCREW CRPANM -	1	-
7	544972001	GASKET KIT *Set of Gaskets*	1	-
3	544464502	WINTER KIT *Winter kit*	1	-
4	503217016	SCREW CCRPANT -	2	-
1	544158502	STARTER ASSY -	1	-
2	544158401	STARTER HOUSING -	1	-
3	537283201	SLEEVE -	1	-
4	540057502	SPRING CASSETTE ASSY -	1	-
5	503212810	SCREW CCRPANT -	2	-
6	537423201	STARTER PULLEY -	1	-
7	537423401	SPRING -	1	-
8	537423301	DRIVER -	1	-
9	537426601	SCREW	1	-

Ref.	Article N.	Description	Qty	Kit
		-		
10	505305125	STARTER ROPE -	1	-
11	537232501	STARTER HANDLE -	1	-
12	503217321	SCREW -	4	-
13	544081501	COOLING AIR CONDUCTER -	1	-
14	544377102	LABEL -	1	-

STARTER

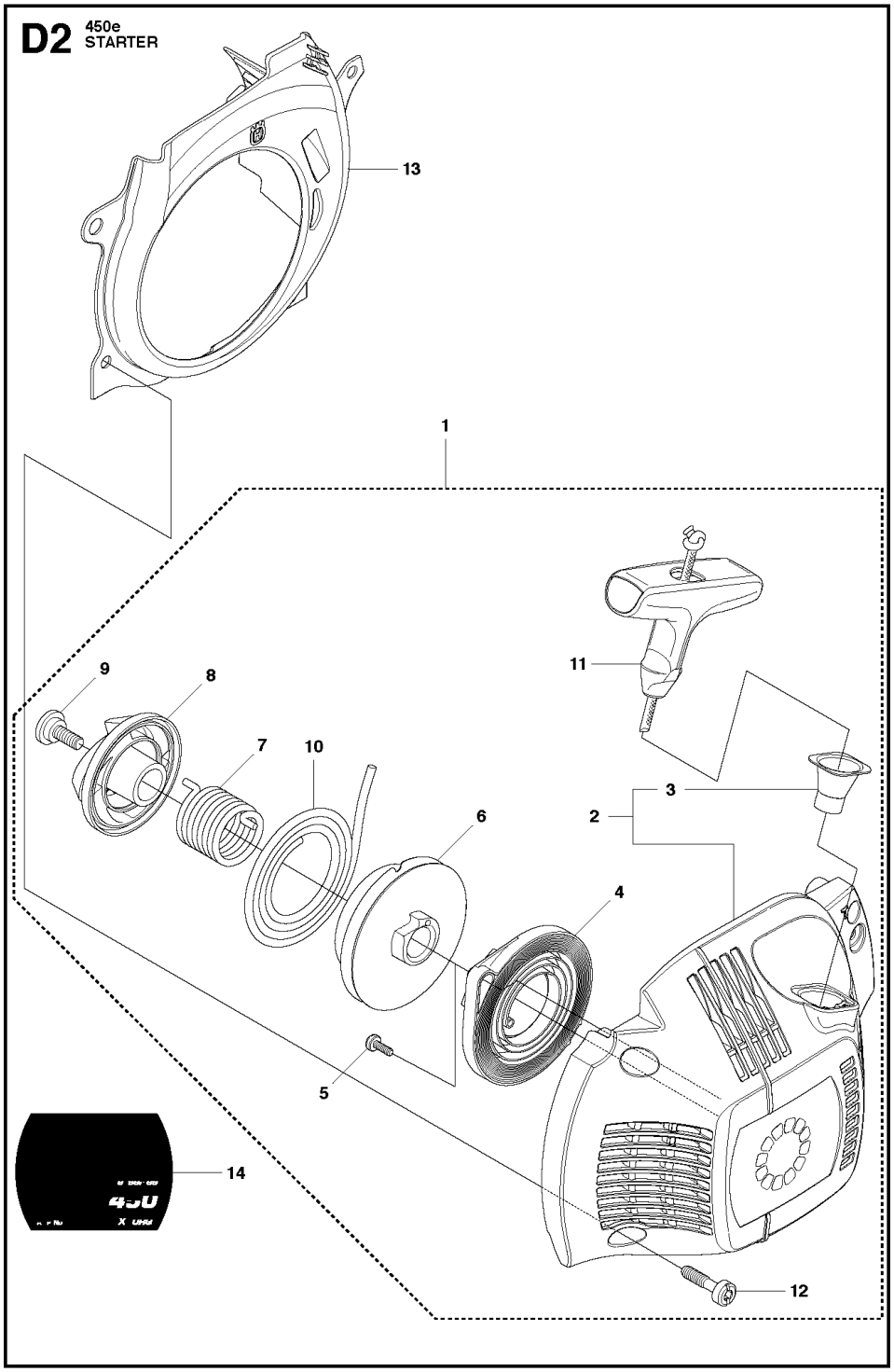

Ref.	Article N.	Description	Qty	Kit
1	501691701	COMBINATION WRENCH -	1	-
1	544082301	PIPE ASSY -	1	-
2	503200216	SCREW IHSCFM -	4	-

Ref.	Article N.	Description	Qty	Kit
3	544083801	INTERMEDATE WALL -	1	-
4	544084001	FLANGE -	1	-
5	503210725	SCREW IHSCFT -	2	-
6	544084101	FLANGE -	1	-
7	544148201	THROTTLE -	1	-
8	506450401	CARBURETTOR *C1M-EL37B*	1	-
9	505514701	FILTER HOLDER ASSY -	1	-
10	544231401	SHACKLE -	1	-
11	503936601	PURGE *air purge*	1	-
12	544401901	HOSE *suction hose*	1	-
13	577535101	RETURN HOSE *return hose*	1	-
14	544359902	CONTROL -	1	-
15	503210750	SCREW IHSCFT -	2	-
16	544080803	AIR FILTER *Felt*	1	-
16	544080802	AIR FILTER *µ 44*	1	-
16	544080801	AIR FILTER *µ 80*	1	-
17	502081001	SHAFT ASSY -	1	-
18	502081101	SPRING -	1	-
19	502080801	COLLAR -	1	-
20	502081201	VALVE -	1	-
21	503481801	SCREW -	1	-
22	537385201	CLIP	1	-

Ref.	Article N.	Description	Qty	Kit
		-		
23	502080901	ROD -	1	-
24	735583000	WASHER -	1	-
1	506450401	CARBURETTOR -	1	-
2	502078201	COLLAR -	1	-
3	502078301	COLLAR -	1	-
4	502078401	SCREW -	1	-
5	502078601	SPRING -	1	-
6	502078701	SPRING -	1	-
7	503479001	SCREW -	1	-
8	503479601	SCREW -	1	-
9	503479701	VALVE -	1	-
10	503480001	PIN RETAINING SCREW -	1	-
11	503480101	SCREW -	1	-
12	503480501	SCREW -	4	-
13	503481101	PIECE -	1	-
14	503481801	SCREW -	2	-
15	503535601	PLUG WELCH -	2	-
16	503535701	STRAINER -	1	-
17	503665901	LEVER -	1	-
18	537020101	GASKET -	1	-
19	537383101	DIAPHRAGM PUMP -	1	-

Ref.	Article N.	Description	Qty	Kit
20	502078901	COVER -	1	-
21	537383301	SCREW -	1	-
22	537383401	SPRING -	1	-
23	537383701	COVER -	1	-
24	544237701	NOZZLE ASSY -	1	-
25	502079001	DIAPHRAGM -	1	-
26	502079101	LEVER -	1	-
27	505101701	LEVER -	1	-
28	502079401	SHAFT ASSY -	1	-
29	502079501	SHAFT ASSY -	1	-
30	502247701	VALVE -	1	-
31	502079801	COLLAR -	1	-
32	537383601	GASKET -	1	-
33	502081701	LEVER -	1	-
34	502079901	SCREW -	1	-
35	502080001	SCREW -	1	-
36	502080101	VALVE -	1	-
37	502080201	GASKET KIT -	1	-
38	544119501	PLUG -	1	-
1	544217205	CLUTCH COVER ASSY *Orange*	1	-
2	504542801	COVER LID	1	-
3	537043001	BRAKE BAND ASSY	1	-
4	544083001	WEAR PROTECTION	1	-

Ref.	Article N.	Description	Qty	Kit
5	503855201	GUIDE BUSHING	1	-
6	503465901	BRAKE SPRING	1	-
7	544082901	COVER LID	1	-
8	503890802	KNEE JOINT ASSY	1	-
9	503892901	PIN	1	-
10	735310820	E-CLIP	1	-
11	537392901	SCREW	1	-
12	537347201	GEAR ASSY	1	-
13	537392601	HEAT PROTECTOR	1	-
14	544357501	LABEL	1	-
15	503217010	SCREW CCRPANT	10	-
16	525354301	BEARING SLEEVE	1	-
17	544250501	WEAR PLATE	1	-
18	537347801	KNOB	1	-
1	537110503	CLUTCH ASSY -	1	-
2	537359101	CLUTCH SPRING -	2	-
3	578097901	CLUTCH DRUM ASSY -	1	-
4	503255201	NEEDLE BEARING -	1	-
5	503931801	WORM WHEEL -	1	-
6	540057901	PUMP PISTON -	1	-
7	537154801	PUMP CYLINDER -	1	-
8	544084202	OIL HOSE -	1	-
1	537438201	CRANKCASE *Orange*	1	-
1	537438205	CRANKCASE *Grey*	1	-
2	503875802	STIFFENING PLATE	1	-
3	503875402	BAR BOLT	1	-
4	537334601	BAR BOLT	1	-
5	544036401	BAR BOLT	1	-
6	503240905	NEEDLE ROLLER	1	-
7	530026119	CHECK VALVE	1	-
8	537403501	FILTER	1	-

Ref.	Article N.	Description	Qty	Kit
9	544083301	OIL SCREEN	1	-
10	544331601	GUIDE PIN	3	-
11	503869301	SUPPORT	2	-
12	544111203	TANK CAP ASSY	1	-
13	589241101	GASKET	1	-
14	503578901	HOLDER	1	-
15	503886301	PIN	1	-
16	503218876	SCREW IHSCT	2	-
17	501007601	SUPPORT	2	-
18	503215103	SCREW IHSCT	1	-
19	544094001	CHAIN GUIDE PLATE	1	-
20	503217010	SCREW CCRPANT	1	-
21	503905901	SPIKE	1	-
22	503217520	SCREW IHSCFT	2	-
23	505422701	HAND GUARD	1	-
24	503892401	LOCK	1	-
25	503893001	SCREW	2	-
26	503436501	POSITION SPRING	1	-
1	525605001	CRANKSHAFT ASSY -	1	-
2	544062001	BEARING -	2	-
3	544013801	SEALING -	2	-
4	503256301	NEEDLE BEARING -	1	-
1	544348303	CYLINDER COVER ASSY	1	-
2	522709201	LABEL	1	-
3	595303001	SNAP LOCKING	3	-
1	544119802	CYLINDER -	1	-
2	544088905	PISTON ASSY -	1	-
3	544088701	PISTON RING -	1	-
4	544211301	CIRCLIP -	1	-
5	503256301	NEEDLE BEARING -	1	-
6	544108701	GASKET -	1	-

Ref.	Article N.	Description	Qty	Kit
7	544109201	GASKET -	1	-
8	503200527	SCREW IHSCM -	4	-
9	544870701	DECOMPRESSION VALVE -	1	-
10	503235111	SPARK PLUG -	1	-
11	540057301	SUPPORT -	1	-
12	503552201	PLUG -	1	-
13	544972001	GASKET KIT *Set of Gaskets*	1	-
1	537437906	FUEL TANK ASSY	1	-
2	503212810	SCREW CCRPANT	1	-
3	720182520	PARALLEL PIN	1	-
4	544099701	THROTTLE TRIGGER	1	-
5	544099901	SPRING	1	-
6	544099801	THROTTLE LOCKOUT	1	-
7	531246501	HANDLE INSERT *Grey soft*	1	-
8	504098801	THROTTLE CABLE ASSY	1	-
9	544128601	FUEL HOSE	1	-
10	503443201	FUEL FILTER	1	-
11	544129701	RETURN HOSE	1	-
12	544111203	TANK CAP ASSY	1	-
13	589241101	GASKET	1	-
14	503578901	HOLDER	1	-
15	544375001	LABEL	1	-
16	501007601	SUPPORT	1	-
17	544101201	ANTIVIBRATION ELEMENT	2	-
18	721126339	GROOVED PIN	1	-
19	501152901	TANK VENT ASSY	1	-
1	544083901	FRONT HANDLE -	1	-
2	503218876	SCREW IHSCT -	3	-
3	503210270	SCREW IHSCT -	2	-
4	503898301	ANTIVIBRATION ELEMENT	1	-

Ref.	Article N.	Description	Qty	Kit
		-		
1	544111801	FLYWHEEL ASSY -	1	-
2	537245601	STARTER PAWL -	2	-
3	501819903	SCREW -	2	-
4	503230042	WASHER -	2	-
5	529271101	SPRING -	2	-
6	503220401	NUT -	1	-
7	573935702	IGNITION MODULE -	1	-
8	510101501	WIRING ASSY -	1	-
9	503200220	SCREW IHSCFM -	2	-
1	544147702	MUFFLER ASSY -	1	-
2	579753301	SCREEN -	1	-
3	579753201	HEAT DEFLECTOR -	1	-
4	579753101	GASKET -	1	-
5	725536855	SCREW IHSCM -	2	-
6	724128759	SCREW CRPANM -	1	-
7	544972001	GASKET KIT *Set of Gaskets*	1	-
3	544464502	WINTER KIT *Winter kit*	1	-
4	503217016	SCREW CCRPANT -	2	-
1	544158502	STARTER ASSY -	1	-
2	544158401	STARTER HOUSING -	1	-
3	537283201	SLEEVE -	1	-

Ref.	Article N.	Description	Qty	Kit
4	540057502	SPRING CASSETTE ASSY -	1	-
5	503212810	SCREW CCRPANT -	2	-
6	537423201	STARTER PULLEY -	1	-
7	537423401	SPRING -	1	-
8	537423301	DRIVER -	1	-
9	537426601	SCREW -	1	-
10	505305125	STARTER ROPE -	1	-
11	537232501	STARTER HANDLE -	1	-
12	503217321	SCREW -	4	-
13	544081501	COOLING AIR CONDUCTER -	1	-
14	544377102	LABEL -	1	-