Product Catalog: Husqvarna/545 Mark II

ACCESSORIES

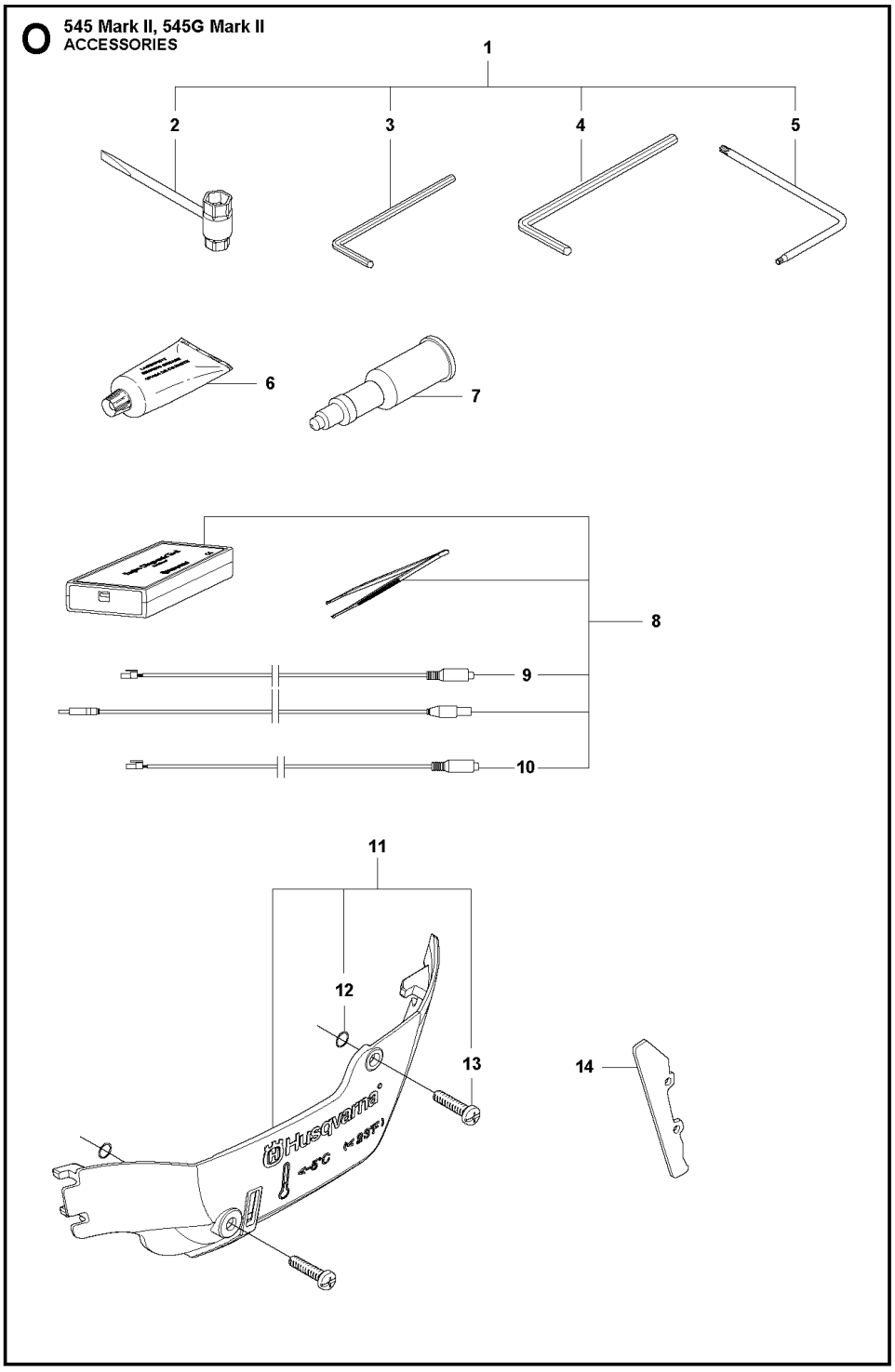

Ref.	Article N.	Description	Qty	Kit
1	503558511	TOOL -	1	-
2	522521101	COMBINATION WRENCH -	1	-
3	502215801	WRENCH -	1	-
4	503558602	SPANNER -	1	-
5	575880701	WRENCH -	1	-
6	503621201	GREASE -	1	-
7	501911401	GREASE GUN -	1	-
8	583897101	DIAGNOSTIC TOOL KIT -	1	-
9	576183401	CABLE ASSY -	1	-
10	576952201	CABLE ASSY -	1	-
11	595967601	WINTER KIT -	1	-
12	740420100	O-RING -	2	-
13	503217016	SCREW CCRPANT -	1	-
14	594745301	BUMPER -	1	-
1	525824401	SCREW ITXSCM	1	-
2	526221801	SCREW CITXPANT	1	-
3	589584501	INSULATION WALL	1	-
4	593784901	INLET PIPE ASSY	1	-
5	503226503	SQUARE NUT	2	-
6	585195001	SUPPORT SLEEVE	1	-
7	589340601	RETAINER	1	-
8	547842601	CARBURETTOR KIT *AT-15C*	1	-
9	526818101	SCREW ITXSCM	4	-
10	536549601	SEALING *From s/n 20240911609 -*	1	-
11	540054901	PURGE *From s/n 20240911609 -*	1	-

Ref.	Article N.	Description	Qty	Kit
12	505156201	SCREW	1	-
13	510017202	CHOKE CONTROL ASSY	1	-
14	523056801	FUEL HOSE	1	-
15	589340701	CONTACT CLAMP	1	-
16	577536402	WIRING ASSY	1	-
17	590458801	AIR FILTER *Nylon Mesh - 64 Micron Rating - Black*	1	-
17	590458802	AIR FILTER *Nylon Mesh - 25 Micron Rating - Yellow*	1	-
17	590458803	AIR FILTER ASSY *Non-Woven - Clear*	1	-
18	525344303	FUEL HOSE	1	-
19	731231401	HEXAGON NUT	1	-
20	525619201	SEALING	1	-
21	581143101	SCREW ITXSCFM	2	-
22	589550703	FILTER HOLDER ASSY *Black*	1	-
23	525619001	SEALING	1	-
24	547549201	PURGE *- up to s/n 20240911608, Sealing and purge*	1	-
1	547842601	CARBURETTOR KIT *AT-15C*	1	-
2	582366201	REPAIR KIT	1	-
3	582366401	GASKET KIT	1	-
4	596969201	GASKET KIT	1	-
1	591083601	HAND GUARD	1	-
2	596218201	SCREW KIT	1	-
3	503751801	PIN	1	-
4	596218101	KNEE JOINT ASSY	1	-
5	505199502	BRAKE BAND ASSY	1	-
6	501846104	CLUTCH COVER ASSY	1	-
7	505201601	GUARD	1	-
8	505199703	COVER	1	-
9	526221801	SCREW CITXPANT	5	-
10	592975201	CHAIN GUIDE	1	-
11	505199801	CHAIN GUIDE	1	-
12	575260404	CHAIN TENSIONER KIT	1	-
13	740480702	O-RING	1	-
14	503230063	WASHER	1	-
15	537017401	BEARING SLEEVE	1	-

Ref.	Article N.	Description	Qty	Kit
16	505197301	NUT	2	-
1	577518202	CLUTCH ASSY	1	-
2	597645401	CLUTCH SPRING	2	-
3	596218303	CLUTCH DRUM ASSY	1	-
4	501457402	RIM SPROCKET	1	-
5	599531501	NEEDLE BEARING	1	-
6	582814001	WORM WHEEL	1	-
7	505199911	OIL PUMP ASSY	1	-
8	503624901	SEALING PLUG	1	-
9	505200204	PUMP PISTON	1	-
10	503230060	WASHER	2	-
11	503891601	SPRING	1	-
12	720123300	PARALLEL PIN	2	-
13	505200101	PUMP CYLINDER	1	-
14	505200402	OIL HOSE	1	-
15	504710003	OIL PLUMMET	1	-
16	526818101	SCREW ITXSCM	2	-
17	505157001	ADJUSTMENT SCREW	1	-
18	721116430	GROOVED PIN	1	-
19	503891501	SPRING	1	-
20	505200301	CASING	1	-
1	575885703	SCREW ITXSCFM	3	-
2	503869301	SUPPORT	2	-
3	544331601	GUIDE PIN	1	-
4	582285201	CARBURETTOR AREA BASE	1	-
5	522620003	TANK CAP ASSY	1	-
6	503578901	HOLDER	1	-
7	589241101	GASKET	1	-
8	595303003	SNAP LOCKING	1	-
9	595897705	CRANKCASE KIT	1	-
10	503751801	PIN	1	-
11	596351401	CATCH	1	-
12	596351301	SPIKE	1	-
13	575793501	SCREW ITXPANM	2	-
14	581559201	BELLOWS	1	-
15	525887401	SCREW CITXPANT	1	-
16	525798103	SCREW ITXSCFT	1	-
17	537377902	CHAIN CATCHER	1	-

Ref.	Article N.	Description	Qty	Kit
18	589721901	CHAIN GUIDE PLATE	1	-
19	537403501	FILTER	1	-
20	530026119	CHECK VALVE	1	-
21	505125801	DEFLECTION LIMITER	1	-
22	505217301	BAR BOLT	2	-
23	720126952	PARALLEL PIN	2	-
24	589331301	SLEEVE	2	-
25	503215325	SCREW ITXSCM	6	-
26	582285901	AIR NOZZLE	1	-
27	526818101	SCREW ITXSCM	1	-
28	525824401	SCREW ITXSCM	1	-
29	501270802	GUIDE BUSHING	2	-
30	595897601	GASKET KIT	1	-
31	596911301	PROTECTIVE CAP *- up to s/n 20224908629*	1	-
1	596218502	CRANKSHAFT KIT	1	-
1	596218504	CRANKSHAFT KIT	1	-
2	501103101	NEEDLE BEARING	1	-
3	536789801	BALL BEARING	1	-
4	597576101	RADIAL SEAL *For SKF Ball bearing 5254342-XX*	1	-
4	536958201	RADIAL SEAL *For HQV Ball bearing 536789801*	1	-
1	591493401	CYLINDER COVER -	1	-
1	574519601	SPARK PLUG	1	-
2	590330508	CYLINDER KIT	1	-
3	525824907	SCREW ITXSCM	4	-
4	576717602	SLEEVE	4	-
5	591177401	GASKET	1	-
6	582702801	PISTON RING	1	-
7	582645602	PISTON ASSY	1	-
8	737441000	SNAP RING	2	-
9	501103101	NEEDLE BEARING	1	-
10	595897601	GASKET KIT	1	-
1	522620003	TANK CAP ASSY	1	-
2	589241101	GASKET	1	-
3	503578901	HOLDER	1	-
4	596550001	THROTTLE CABLE ASSY	1	-

Ref.	Article N.	Description	Qty	Kit
5	596882002	ANTIVIBRATION ELEMENT	1	-
6	720182520	PARALLEL PIN	1	-
7	501007601	SUPPORT	1	-
8	590377401	ANTIVIBRATION ELEMENT	1	-
9	523085501	DEFLECTION LIMITER	1	-
10	501152901	TANK VENT ASSY	1	-
11	529578202	FUEL HOSE ASSY *With magnet*	1	-
12	503443203	FUEL FILTER *18-40 µm (Blue)*	1	-
12	503443205	FUEL FILTER *18-40 µm (Blue) Mega pack (100 pcs)*	1	-
13	544099801	THROTTLE LOCKOUT	1	-
14	544099901	SPRING	1	-
15	505157701	THROTTLE	1	-
16	504106301	HANDLE INSERT	1	-
17	525887402	SCREW CITXPANT	1	-
18	596554002	FUEL TANK KIT	1	-
19	582794105	LABEL	1	-
1	582014901	HANDLE SYSTEM -	1	-
2	525798103	SCREW ITXSCFT -	2	-
3	525798101	SCREW ITXSCFT -	2	-
4	525755101	SCREW ITXSCFM -	1	-
5	595303401	ANTIVIBRATION ELEMENT -	1	-
6	503222401	LOCK NUT -	1	-
1	582777303	IGNITION MODULE ASSY -	1	-
2	596352901	CAP ASSY -	1	-
3	525755102	SCREW ITXSCFM -	2	-
4	503220401	NUT -	1	-
5	596230601	SCREW KIT -	1	-

Ref.	Article N.	Description	Qty	Kit
6	522937805	FLYWHEEL ASSY -	1	-
1	583798701	MUFFLER KIT -	1	-
2	583799301	SPARK ARRESTER -	1	-
3	501515402	SUPPORT -	1	-
4	724128759	SCREW CRPANM -	1	-
5	525825107	SCREW ITXSCM -	2	-
6	583799001	HEAT DEFLECTOR -	1	-
7	583798801	MUFFLER GASKET -	1	-
8	595897601	GASKET KIT -	1	-
9	582885501	SCREW -	2	-
1	531114506	SHORT BLOCK	1	-
1	582866901	COOLING AIR CONDUCTOR -	1	-
2	576356601	SCREW ITXSCT -	1	-
3	582650702	STARTER PULLEY -	1	-
4	505305125	STARTER ROPE -	1	-
5	525887401	SCREW CITXPANT -	2	-
6	505157902	SPRING CASSETTE ASSY -	1	-
7	596230301	STARTER ASSY -	1	-
8	525824501	SCREW CITXPANMO -	4	-
9	582503401	STARTER HOUSING -	1	-
10	537283201	SLEEVE -	1	-
11	537232501	STARTER HANDLE -	1	-

Ref.	Article N.	Description	Qty	Kit
12	590613403	LABEL *545*	1	-
12	590613404	LABEL *545G*	1	-
1	582866901	COOLING AIR CONDUCTOR	1	-
2	576356601	SCREW ITXSCT	1	-
4	503858902	STARTER ROPE	1	-
5	525887401	SCREW CITXPANT	2	-
6	505157902	SPRING CASSETTE ASSY	1	-
7	596230502	STARTER ASSY	1	-
8	525824501	SCREW CITXPANMO	4	-
9	582503401	STARTER HOUSING	1	-
10	537283201	SLEEVE	1	-
11	537232501	STARTER HANDLE	1	-
12	590613403	LABEL *545*	1	-
12	590613404	LABEL *545G*	1	-
13	582644902	TORSION SPRING	1	-
15	599289202	STARTER PULLEY	1	-
1	590260901	HANDLE INSERT	1	-
2	503220401	NUT	1	-
3	596230601	SCREW KIT	1	-
4	522937806	FLYWHEEL ASSY	1	-
5	526818102	SCREW ITXSCM	2	-
6	590260301	STATOR ASSY	1	-
7	588168603	FOIL ELEMENT	1	-
8	590688301	THERMOSTAT ASSY	1	-
9	582014902	HANDLE SYSTEM	1	-
10	503222401	LOCK NUT	1	-
11	590201901	CONTACT PLATE	1	-
12	537252501	CONTACT PLATE	1	-
13	595303401	ANTIVIBRATION ELEMENT	1	-
14	525755101	SCREW ITXSCFM	1	-
15	596201401	PROTECTION	1	-
16	590201801	COVER	1	-
17	578776102	SCREW ITXPANT	1	-
18	525798103	SCREW ITXSCFT	2	-
19	525798101	SCREW ITXSCFT	2	-

Ref.	Article N.	Description	Qty	Kit
20	537088301	GROMMET	1	-
21	581143101	SCREW ITXSCFM	2	-
22	589550704	FILTER HOLDER ASSY *Blue*	1	-
23	525619001	SEALING	1	-
24	525619201	SEALING	1	-
25	731231401	HEXAGON NUT	1	-
26	510017202	CHOKE CONTROL ASSY	1	-
27	505156201	SCREW	1	-

CARBURETOR AND AIR FILTER

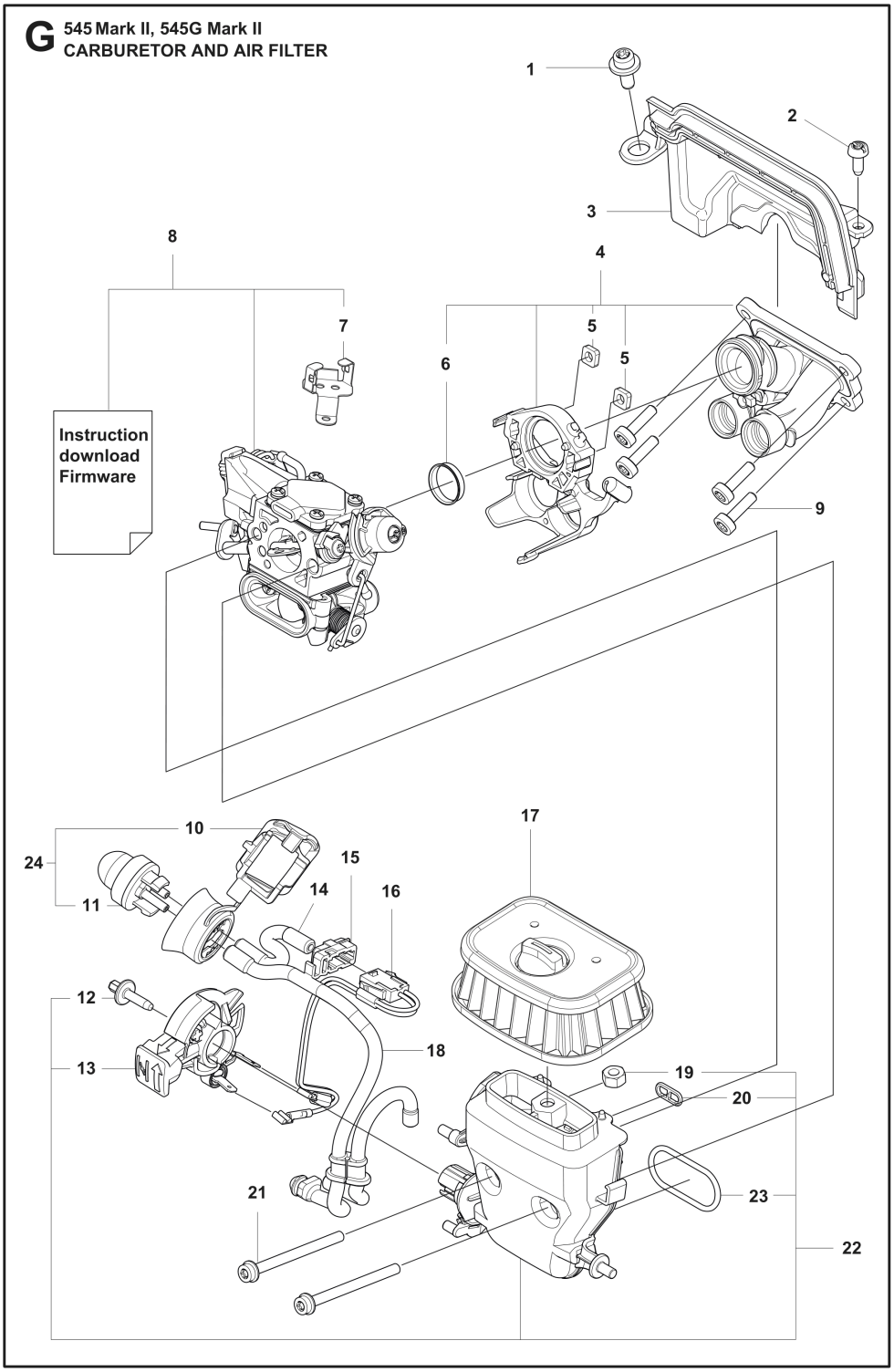

Ref.	Article N.	Description	Qty	Kit
1	503558511	TOOL -	1	-
2	522521101	COMBINATION WRENCH -	1	-
3	502215801	WRENCH -	1	-

Ref.	Article N.	Description	Qty	Kit
4	503558602	SPANNER -	1	-
5	575880701	WRENCH -	1	-
6	503621201	GREASE -	1	-
7	501911401	GREASE GUN -	1	-
8	583897101	DIAGNOSTIC TOOL KIT -	1	-
9	576183401	CABLE ASSY -	1	-
10	576952201	CABLE ASSY -	1	-
11	595967601	WINTER KIT -	1	-
12	740420100	O-RING -	2	-
13	503217016	SCREW CCRPANT -	1	-
14	594745301	BUMPER -	1	-
1	525824401	SCREW ITXSCM	1	-
2	526221801	SCREW CITXPANT	1	-
3	589584501	INSULATION WALL	1	-
4	593784901	INLET PIPE ASSY	1	-
5	503226503	SQUARE NUT	2	-
6	585195001	SUPPORT SLEEVE	1	-
7	589340601	RETAINER	1	-
8	547842601	CARBURETTOR KIT *AT-15C*	1	-
9	526818101	SCREW ITXSCM	4	-
10	536549601	SEALING *From s/n 20240911609 -*	1	-
11	540054901	PURGE *From s/n 20240911609 -*	1	-
12	505156201	SCREW	1	-
13	510017202	CHOKE CONTROL ASSY	1	-
14	523056801	FUEL HOSE	1	-
15	589340701	CONTACT CLAMP	1	-
16	577536402	WIRING ASSY	1	-

Ref.	Article N.	Description	Qty	Kit
17	590458801	AIR FILTER *Nylon Mesh - 64 Micron Rating - Black*	1	-
17	590458802	AIR FILTER *Nylon Mesh - 25 Micron Rating - Yellow*	1	-
17	590458803	AIR FILTER ASSY *Non-Woven - Clear*	1	-
18	525344303	FUEL HOSE	1	-
19	731231401	HEXAGON NUT	1	-
20	525619201	SEALING	1	-
21	581143101	SCREW ITXSCFM	2	-
22	589550703	FILTER HOLDER ASSY *Black*	1	-
23	525619001	SEALING	1	-
24	547549201	PURGE *- up to s/n 20240911608, Sealing and purge*	1	-
1	547842601	CARBURETTOR KIT *AT-15C*	1	-
2	582366201	REPAIR KIT	1	-
3	582366401	GASKET KIT	1	-
4	596969201	GASKET KIT	1	-
1	591083601	HAND GUARD	1	-
2	596218201	SCREW KIT	1	-
3	503751801	PIN	1	-
4	596218101	KNEE JOINT ASSY	1	-
5	505199502	BRAKE BAND ASSY	1	-
6	501846104	CLUTCH COVER ASSY	1	-
7	505201601	GUARD	1	-
8	505199703	COVER	1	-
9	526221801	SCREW CITXPANT	5	-
10	592975201	CHAIN GUIDE	1	-
11	505199801	CHAIN GUIDE	1	-
12	575260404	CHAIN TENSIONER KIT	1	-
13	740480702	O-RING	1	-
14	503230063	WASHER	1	-
15	537017401	BEARING SLEEVE	1	-
16	505197301	NUT	2	-
1	577518202	CLUTCH ASSY	1	-
2	597645401	CLUTCH SPRING	2	-
3	596218303	CLUTCH DRUM ASSY	1	-
4	501457402	RIM SPROCKET	1	-

Ref.	Article N.	Description	Qty	Kit
5	599531501	NEEDLE BEARING	1	-
6	582814001	WORM WHEEL	1	-
7	505199911	OIL PUMP ASSY	1	-
8	503624901	SEALING PLUG	1	-
9	505200204	PUMP PISTON	1	-
10	503230060	WASHER	2	-
11	503891601	SPRING	1	-
12	720123300	PARALLEL PIN	2	-
13	505200101	PUMP CYLINDER	1	-
14	505200402	OIL HOSE	1	-
15	504710003	OIL PLUMMET	1	-
16	526818101	SCREW ITXSCM	2	-
17	505157001	ADJUSTMENT SCREW	1	-
18	721116430	GROOVED PIN	1	-
19	503891501	SPRING	1	-
20	505200301	CASING	1	-
1	575885703	SCREW ITXSCFM	3	-
2	503869301	SUPPORT	2	-
3	544331601	GUIDE PIN	1	-
4	582285201	CARBURETTOR AREA BASE	1	-
5	522620003	TANK CAP ASSY	1	-
6	503578901	HOLDER	1	-
7	589241101	GASKET	1	-
8	595303003	SNAP LOCKING	1	-
9	595897705	CRANKCASE KIT	1	-
10	503751801	PIN	1	-
11	596351401	CATCH	1	-
12	596351301	SPIKE	1	-
13	575793501	SCREW ITXPANM	2	-
14	581559201	BELLOWS	1	-
15	525887401	SCREW CITXPANT	1	-
16	525798103	SCREW ITXSCFT	1	-
17	537377902	CHAIN CATCHER	1	-
18	589721901	CHAIN GUIDE PLATE	1	-
19	537403501	FILTER	1	-
20	530026119	CHECK VALVE	1	-
21	505125801	DEFLECTION LIMITER	1	-
22	505217301	BAR BOLT	2	-

Ref.	Article N.	Description	Qty	Kit
23	720126952	PARALLEL PIN	2	-
24	589331301	SLEEVE	2	-
25	503215325	SCREW ITXSCM	6	-
26	582285901	AIR NOZZLE	1	-
27	526818101	SCREW ITXSCM	1	-
28	525824401	SCREW ITXSCM	1	-
29	501270802	GUIDE BUSHING	2	-
30	595897601	GASKET KIT	1	-
31	596911301	PROTECTIVE CAP *- up to s/n 20224908629*	1	-
1	596218502	CRANKSHAFT KIT	1	-
1	596218504	CRANKSHAFT KIT	1	-
2	501103101	NEEDLE BEARING	1	-
3	536789801	BALL BEARING	1	-
4	597576101	RADIAL SEAL *For SKF Ball bearing 5254342-XX*	1	-
4	536958201	RADIAL SEAL *For HQV Ball bearing 536789801*	1	-
1	591493401	CYLINDER COVER -	1	-
1	574519601	SPARK PLUG	1	-
2	590330508	CYLINDER KIT	1	-
3	525824907	SCREW ITXSCM	4	-
4	576717602	SLEEVE	4	-
5	591177401	GASKET	1	-
6	582702801	PISTON RING	1	-
7	582645602	PISTON ASSY	1	-
8	737441000	SNAP RING	2	-
9	501103101	NEEDLE BEARING	1	-
10	595897601	GASKET KIT	1	-
1	522620003	TANK CAP ASSY	1	-
2	589241101	GASKET	1	-
3	503578901	HOLDER	1	-
4	596550001	THROTTLE CABLE ASSY	1	-
5	596882002	ANTIVIBRATION ELEMENT	1	-
6	720182520	PARALLEL PIN	1	-
7	501007601	SUPPORT	1	-
8	590377401	ANTIVIBRATION ELEMENT	1	-
9	523085501	DEFLECTION LIMITER	1	-

Ref.	Article N.	Description	Qty	Kit
10	501152901	TANK VENT ASSY	1	-
11	529578202	FUEL HOSE ASSY *With magnet*	1	-
12	503443203	FUEL FILTER *18-40 µm (Blue)*	1	-
12	503443205	FUEL FILTER *18-40 µm (Blue) Mega pack (100 pcs)*	1	-
13	544099801	THROTTLE LOCKOUT	1	-
14	544099901	SPRING	1	-
15	505157701	THROTTLE	1	-
16	504106301	HANDLE INSERT	1	-
17	525887402	SCREW CITXPANT	1	-
18	596554002	FUEL TANK KIT	1	-
19	582794105	LABEL	1	-
1	582014901	HANDLE SYSTEM -	1	-
2	525798103	SCREW ITXSCFT -	2	-
3	525798101	SCREW ITXSCFT -	2	-
4	525755101	SCREW ITXSCFM -	1	-
5	595303401	ANTIVIBRATION ELEMENT -	1	-
6	503222401	LOCK NUT -	1	-
1	582777303	IGNITION MODULE ASSY -	1	-
2	596352901	CAP ASSY -	1	-
3	525755102	SCREW ITXSCFM -	2	-
4	503220401	NUT -	1	-
5	596230601	SCREW KIT -	1	-
6	522937805	FLYWHEEL ASSY -	1	-
1	583798701	MUFFLER KIT -	1	-
2	583799301	SPARK ARRESTER -	1	-

Ref.	Article N.	Description	Qty	Kit
3	501515402	SUPPORT -	1	-
4	724128759	SCREW CRPANM -	1	-
5	525825107	SCREW ITXSCM -	2	-
6	583799001	HEAT DEFLECTOR -	1	-
7	583798801	MUFFLER GASKET -	1	-
8	595897601	GASKET KIT -	1	-
9	582885501	SCREW -	2	-
1	531114506	SHORT BLOCK	1	-
1	582866901	COOLING AIR CONDUCTOR -	1	-
2	576356601	SCREW ITXSCT -	1	-
3	582650702	STARTER PULLEY -	1	-
4	505305125	STARTER ROPE -	1	-
5	525887401	SCREW CITXPANT -	2	-
6	505157902	SPRING CASSETTE ASSY -	1	-
7	596230301	STARTER ASSY -	1	-
8	525824501	SCREW CITXPANMO -	4	-
9	582503401	STARTER HOUSING -	1	-
10	537283201	SLEEVE -	1	-
11	537232501	STARTER HANDLE -	1	-
12	590613403	LABEL *545*	1	-
12	590613404	LABEL *545G*	1	-
1	582866901	COOLING AIR CONDUCTOR	1	-
2	576356601	SCREW ITXSCT	1	-

Ref.	Article N.	Description	Qty	Kit
4	503858902	STARTER ROPE	1	-
5	525887401	SCREW CITXPANT	2	-
6	505157902	SPRING CASSETTE ASSY	1	-
7	596230502	STARTER ASSY	1	-
8	525824501	SCREW CITXPANMO	4	-
9	582503401	STARTER HOUSING	1	-
10	537283201	SLEEVE	1	-
11	537232501	STARTER HANDLE	1	-
12	590613403	LABEL *545*	1	-
12	590613404	LABEL *545G*	1	-
13	582644902	TORSION SPRING	1	-
15	599289202	STARTER PULLEY	1	-
1	590260901	HANDLE INSERT	1	-
2	503220401	NUT	1	-
3	596230601	SCREW KIT	1	-
4	522937806	FLYWHEEL ASSY	1	-
5	526818102	SCREW ITXSCM	2	-
6	590260301	STATOR ASSY	1	-
7	588168603	FOIL ELEMENT	1	-
8	590688301	THERMOSTAT ASSY	1	-
9	582014902	HANDLE SYSTEM	1	-
10	503222401	LOCK NUT	1	-
11	590201901	CONTACT PLATE	1	-
12	537252501	CONTACT PLATE	1	-
13	595303401	ANTIVIBRATION ELEMENT	1	-
14	525755101	SCREW ITXSCFM	1	-
15	596201401	PROTECTION	1	-
16	590201801	COVER	1	-
17	578776102	SCREW ITXPANT	1	-
18	525798103	SCREW ITXSCFT	2	-
19	525798101	SCREW ITXSCFT	2	-
20	537088301	GROMMET	1	-
21	581143101	SCREW ITXSCFM	2	-
22	589550704	FILTER HOLDER ASSY *Blue*	1	-
23	525619001	SEALING	1	-
24	525619201	SEALING	1	-

Ref.	Article N.	Description	Qty	Kit
25	731231401	HEXAGON NUT	1	-
26	510017202	CHOKE CONTROL ASSY	1	-
27	505156201	SCREW	1	-

CARBURETOR DETAILS

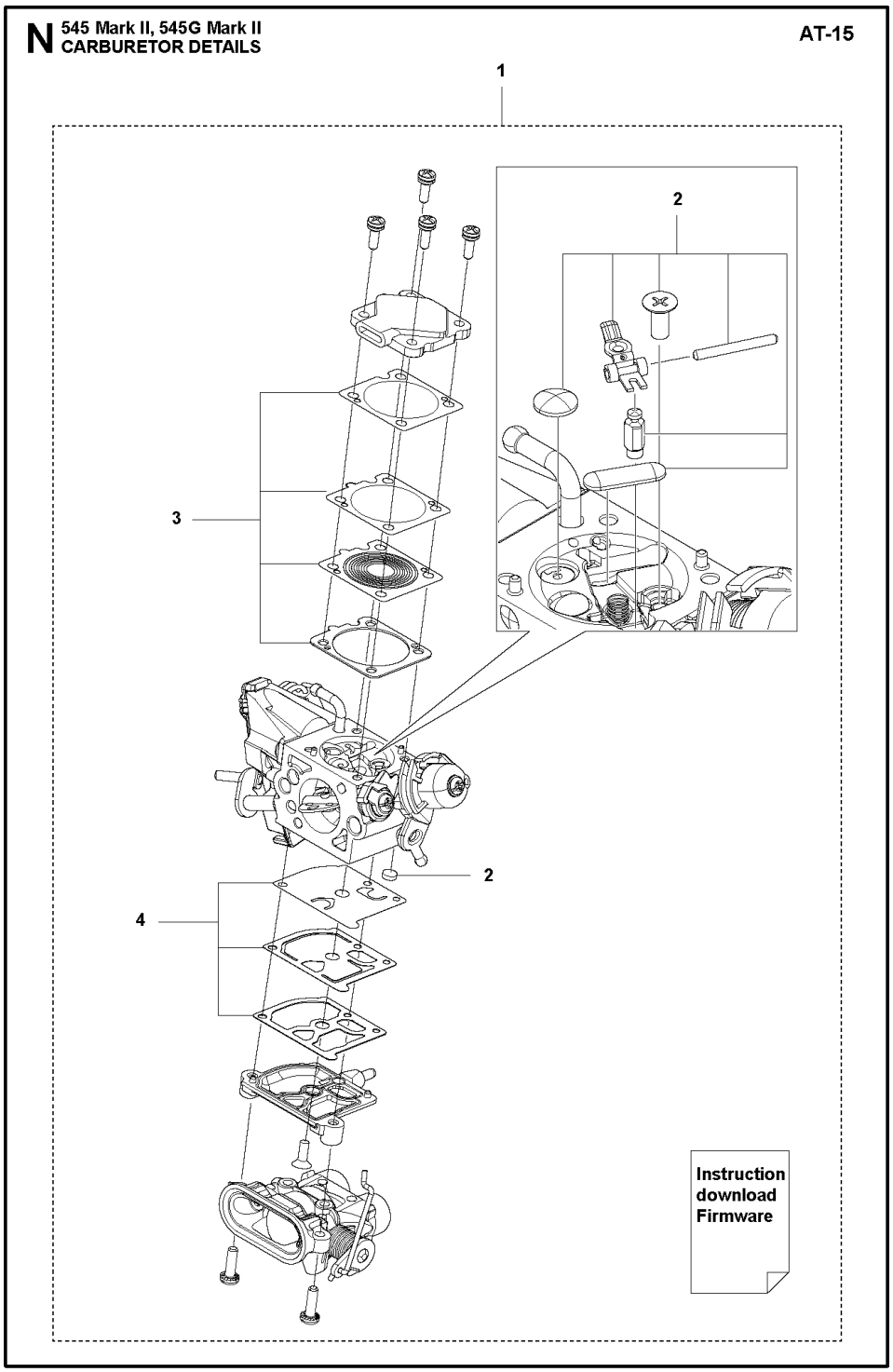

Ref.	Article N.	Description	Qty	Kit
1	503558511	TOOL -	1	-
2	522521101	COMBINATION WRENCH -	1	-
3	502215801	WRENCH -	1	-

Ref.	Article N.	Description	Qty	Kit
4	503558602	SPANNER -	1	-
5	575880701	WRENCH -	1	-
6	503621201	GREASE -	1	-
7	501911401	GREASE GUN -	1	-
8	583897101	DIAGNOSTIC TOOL KIT -	1	-
9	576183401	CABLE ASSY -	1	-
10	576952201	CABLE ASSY -	1	-
11	595967601	WINTER KIT -	1	-
12	740420100	O-RING -	2	-
13	503217016	SCREW CCRPANT -	1	-
14	594745301	BUMPER -	1	-
1	525824401	SCREW ITXSCM	1	-
2	526221801	SCREW CITXPANT	1	-
3	589584501	INSULATION WALL	1	-
4	593784901	INLET PIPE ASSY	1	-
5	503226503	SQUARE NUT	2	-
6	585195001	SUPPORT SLEEVE	1	-
7	589340601	RETAINER	1	-
8	547842601	CARBURETTOR KIT *AT-15C*	1	-
9	526818101	SCREW ITXSCM	4	-
10	536549601	SEALING *From s/n 20240911609 -*	1	-
11	540054901	PURGE *From s/n 20240911609 -*	1	-
12	505156201	SCREW	1	-
13	510017202	CHOKE CONTROL ASSY	1	-
14	523056801	FUEL HOSE	1	-
15	589340701	CONTACT CLAMP	1	-
16	577536402	WIRING ASSY	1	-

Ref.	Article N.	Description	Qty	Kit
17	590458801	AIR FILTER *Nylon Mesh - 64 Micron Rating - Black*	1	-
17	590458802	AIR FILTER *Nylon Mesh - 25 Micron Rating - Yellow*	1	-
17	590458803	AIR FILTER ASSY *Non-Woven - Clear*	1	-
18	525344303	FUEL HOSE	1	-
19	731231401	HEXAGON NUT	1	-
20	525619201	SEALING	1	-
21	581143101	SCREW ITXSCFM	2	-
22	589550703	FILTER HOLDER ASSY *Black*	1	-
23	525619001	SEALING	1	-
24	547549201	PURGE *- up to s/n 20240911608, Sealing and purge*	1	-
1	547842601	CARBURETTOR KIT *AT-15C*	1	-
2	582366201	REPAIR KIT	1	-
3	582366401	GASKET KIT	1	-
4	596969201	GASKET KIT	1	-
1	591083601	HAND GUARD	1	-
2	596218201	SCREW KIT	1	-
3	503751801	PIN	1	-
4	596218101	KNEE JOINT ASSY	1	-
5	505199502	BRAKE BAND ASSY	1	-
6	501846104	CLUTCH COVER ASSY	1	-
7	505201601	GUARD	1	-
8	505199703	COVER	1	-
9	526221801	SCREW CITXPANT	5	-
10	592975201	CHAIN GUIDE	1	-
11	505199801	CHAIN GUIDE	1	-
12	575260404	CHAIN TENSIONER KIT	1	-
13	740480702	O-RING	1	-
14	503230063	WASHER	1	-
15	537017401	BEARING SLEEVE	1	-
16	505197301	NUT	2	-
1	577518202	CLUTCH ASSY	1	-
2	597645401	CLUTCH SPRING	2	-
3	596218303	CLUTCH DRUM ASSY	1	-
4	501457402	RIM SPROCKET	1	-

Ref.	Article N.	Description	Qty	Kit
5	599531501	NEEDLE BEARING	1	-
6	582814001	WORM WHEEL	1	-
7	505199911	OIL PUMP ASSY	1	-
8	503624901	SEALING PLUG	1	-
9	505200204	PUMP PISTON	1	-
10	503230060	WASHER	2	-
11	503891601	SPRING	1	-
12	720123300	PARALLEL PIN	2	-
13	505200101	PUMP CYLINDER	1	-
14	505200402	OIL HOSE	1	-
15	504710003	OIL PLUMMET	1	-
16	526818101	SCREW ITXSCM	2	-
17	505157001	ADJUSTMENT SCREW	1	-
18	721116430	GROOVED PIN	1	-
19	503891501	SPRING	1	-
20	505200301	CASING	1	-
1	575885703	SCREW ITXSCFM	3	-
2	503869301	SUPPORT	2	-
3	544331601	GUIDE PIN	1	-
4	582285201	CARBURETTOR AREA BASE	1	-
5	522620003	TANK CAP ASSY	1	-
6	503578901	HOLDER	1	-
7	589241101	GASKET	1	-
8	595303003	SNAP LOCKING	1	-
9	595897705	CRANKCASE KIT	1	-
10	503751801	PIN	1	-
11	596351401	CATCH	1	-
12	596351301	SPIKE	1	-
13	575793501	SCREW ITXPANM	2	-
14	581559201	BELLOWS	1	-
15	525887401	SCREW CITXPANT	1	-
16	525798103	SCREW ITXSCFT	1	-
17	537377902	CHAIN CATCHER	1	-
18	589721901	CHAIN GUIDE PLATE	1	-
19	537403501	FILTER	1	-
20	530026119	CHECK VALVE	1	-
21	505125801	DEFLECTION LIMITER	1	-
22	505217301	BAR BOLT	2	-

Ref.	Article N.	Description	Qty	Kit
23	720126952	PARALLEL PIN	2	-
24	589331301	SLEEVE	2	-
25	503215325	SCREW ITXSCM	6	-
26	582285901	AIR NOZZLE	1	-
27	526818101	SCREW ITXSCM	1	-
28	525824401	SCREW ITXSCM	1	-
29	501270802	GUIDE BUSHING	2	-
30	595897601	GASKET KIT	1	-
31	596911301	PROTECTIVE CAP *- up to s/n 20224908629*	1	-
1	596218502	CRANKSHAFT KIT	1	-
1	596218504	CRANKSHAFT KIT	1	-
2	501103101	NEEDLE BEARING	1	-
3	536789801	BALL BEARING	1	-
4	597576101	RADIAL SEAL *For SKF Ball bearing 5254342-XX*	1	-
4	536958201	RADIAL SEAL *For HQV Ball bearing 536789801*	1	-
1	591493401	CYLINDER COVER -	1	-
1	574519601	SPARK PLUG	1	-
2	590330508	CYLINDER KIT	1	-
3	525824907	SCREW ITXSCM	4	-
4	576717602	SLEEVE	4	-
5	591177401	GASKET	1	-
6	582702801	PISTON RING	1	-
7	582645602	PISTON ASSY	1	-
8	737441000	SNAP RING	2	-
9	501103101	NEEDLE BEARING	1	-
10	595897601	GASKET KIT	1	-
1	522620003	TANK CAP ASSY	1	-
2	589241101	GASKET	1	-
3	503578901	HOLDER	1	-
4	596550001	THROTTLE CABLE ASSY	1	-
5	596882002	ANTIVIBRATION ELEMENT	1	-
6	720182520	PARALLEL PIN	1	-
7	501007601	SUPPORT	1	-
8	590377401	ANTIVIBRATION ELEMENT	1	-
9	523085501	DEFLECTION LIMITER	1	-

Ref.	Article N.	Description	Qty	Kit
10	501152901	TANK VENT ASSY	1	-
11	529578202	FUEL HOSE ASSY *With magnet*	1	-
12	503443203	FUEL FILTER *18-40 µm (Blue)*	1	-
12	503443205	FUEL FILTER *18-40 µm (Blue) Mega pack (100 pcs)*	1	-
13	544099801	THROTTLE LOCKOUT	1	-
14	544099901	SPRING	1	-
15	505157701	THROTTLE	1	-
16	504106301	HANDLE INSERT	1	-
17	525887402	SCREW CITXPANT	1	-
18	596554002	FUEL TANK KIT	1	-
19	582794105	LABEL	1	-
1	582014901	HANDLE SYSTEM -	1	-
2	525798103	SCREW ITXSCFT -	2	-
3	525798101	SCREW ITXSCFT -	2	-
4	525755101	SCREW ITXSCFM -	1	-
5	595303401	ANTIVIBRATION ELEMENT -	1	-
6	503222401	LOCK NUT -	1	-
1	582777303	IGNITION MODULE ASSY -	1	-
2	596352901	CAP ASSY -	1	-
3	525755102	SCREW ITXSCFM -	2	-
4	503220401	NUT -	1	-
5	596230601	SCREW KIT -	1	-
6	522937805	FLYWHEEL ASSY -	1	-
1	583798701	MUFFLER KIT -	1	-
2	583799301	SPARK ARRESTER -	1	-

Ref.	Article N.	Description	Qty	Kit
3	501515402	SUPPORT -	1	-
4	724128759	SCREW CRPANM -	1	-
5	525825107	SCREW ITXSCM -	2	-
6	583799001	HEAT DEFLECTOR -	1	-
7	583798801	MUFFLER GASKET -	1	-
8	595897601	GASKET KIT -	1	-
9	582885501	SCREW -	2	-
1	531114506	SHORT BLOCK	1	-
1	582866901	COOLING AIR CONDUCTOR -	1	-
2	576356601	SCREW ITXSCT -	1	-
3	582650702	STARTER PULLEY -	1	-
4	505305125	STARTER ROPE -	1	-
5	525887401	SCREW CITXPANT -	2	-
6	505157902	SPRING CASSETTE ASSY -	1	-
7	596230301	STARTER ASSY -	1	-
8	525824501	SCREW CITXPANMO -	4	-
9	582503401	STARTER HOUSING -	1	-
10	537283201	SLEEVE -	1	-
11	537232501	STARTER HANDLE -	1	-
12	590613403	LABEL *545*	1	-
12	590613404	LABEL *545G*	1	-
1	582866901	COOLING AIR CONDUCTOR	1	-
2	576356601	SCREW ITXSCT	1	-

Ref.	Article N.	Description	Qty	Kit
4	503858902	STARTER ROPE	1	-
5	525887401	SCREW CITXPANT	2	-
6	505157902	SPRING CASSETTE ASSY	1	-
7	596230502	STARTER ASSY	1	-
8	525824501	SCREW CITXPANMO	4	-
9	582503401	STARTER HOUSING	1	-
10	537283201	SLEEVE	1	-
11	537232501	STARTER HANDLE	1	-
12	590613403	LABEL *545*	1	-
12	590613404	LABEL *545G*	1	-
13	582644902	TORSION SPRING	1	-
15	599289202	STARTER PULLEY	1	-
1	590260901	HANDLE INSERT	1	-
2	503220401	NUT	1	-
3	596230601	SCREW KIT	1	-
4	522937806	FLYWHEEL ASSY	1	-
5	526818102	SCREW ITXSCM	2	-
6	590260301	STATOR ASSY	1	-
7	588168603	FOIL ELEMENT	1	-
8	590688301	THERMOSTAT ASSY	1	-
9	582014902	HANDLE SYSTEM	1	-
10	503222401	LOCK NUT	1	-
11	590201901	CONTACT PLATE	1	-
12	537252501	CONTACT PLATE	1	-
13	595303401	ANTIVIBRATION ELEMENT	1	-
14	525755101	SCREW ITXSCFM	1	-
15	596201401	PROTECTION	1	-
16	590201801	COVER	1	-
17	578776102	SCREW ITXPANT	1	-
18	525798103	SCREW ITXSCFT	2	-
19	525798101	SCREW ITXSCFT	2	-
20	537088301	GROMMET	1	-
21	581143101	SCREW ITXSCFM	2	-
22	589550704	FILTER HOLDER ASSY *Blue*	1	-
23	525619001	SEALING	1	-
24	525619201	SEALING	1	-

Ref.	Article N.	Description	Qty	Kit
25	731231401	HEXAGON NUT	1	-
26	510017202	CHOKE CONTROL ASSY	1	-
27	505156201	SCREW	1	-

CHAIN BRAKE AND CLUTCH COVER

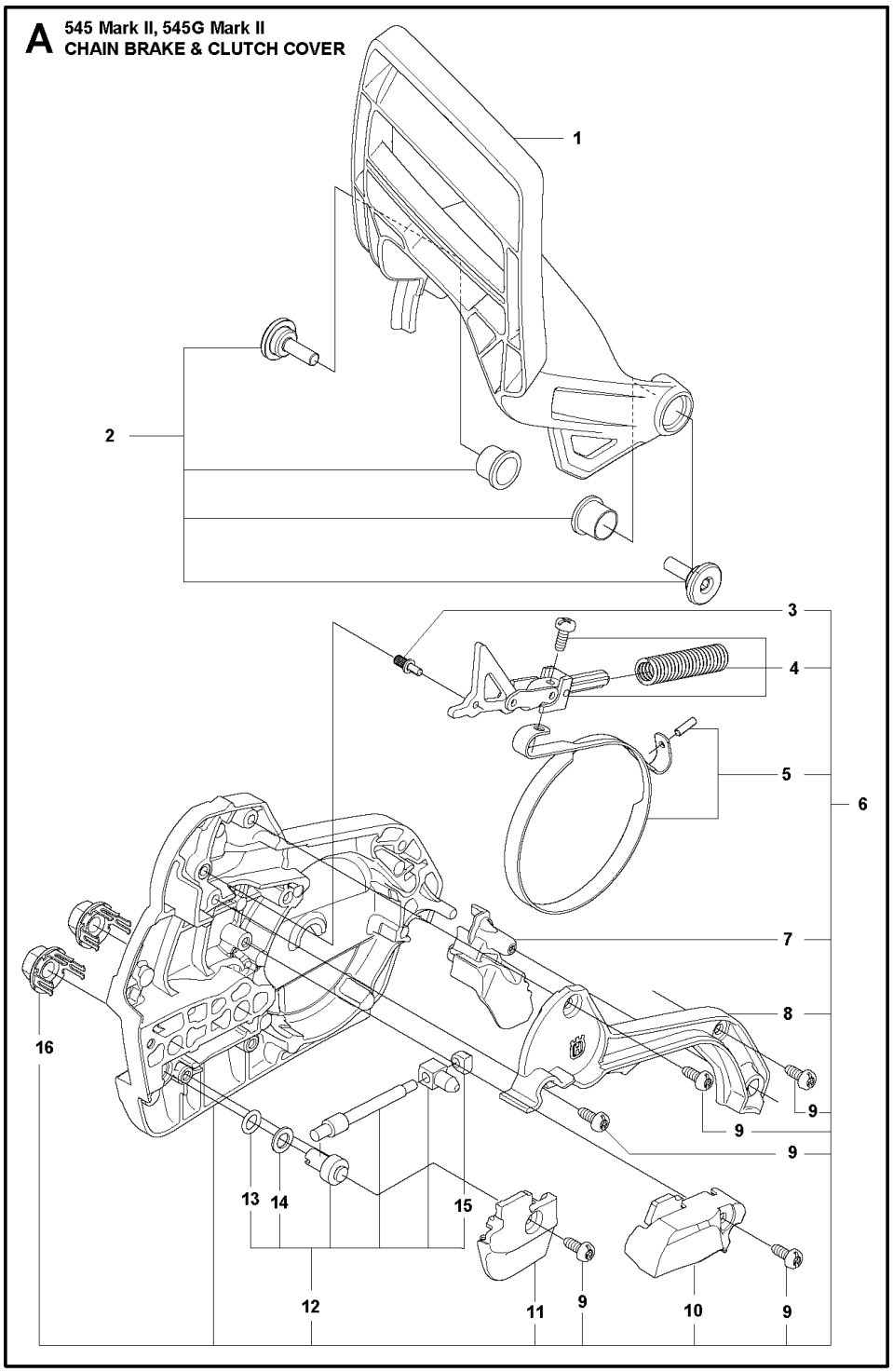

Ref.	Article N.	Description	Qty	Kit
1	503558511	TOOL -	1	-
2	522521101	COMBINATION WRENCH -	1	-
3	502215801	WRENCH -	1	-

Ref.	Article N.	Description	Qty	Kit
4	503558602	SPANNER -	1	-
5	575880701	WRENCH -	1	-
6	503621201	GREASE -	1	-
7	501911401	GREASE GUN -	1	-
8	583897101	DIAGNOSTIC TOOL KIT -	1	-
9	576183401	CABLE ASSY -	1	-
10	576952201	CABLE ASSY -	1	-
11	595967601	WINTER KIT -	1	-
12	740420100	O-RING -	2	-
13	503217016	SCREW CCRPANT -	1	-
14	594745301	BUMPER -	1	-
1	525824401	SCREW ITXSCM	1	-
2	526221801	SCREW CITXPANT	1	-
3	589584501	INSULATION WALL	1	-
4	593784901	INLET PIPE ASSY	1	-
5	503226503	SQUARE NUT	2	-
6	585195001	SUPPORT SLEEVE	1	-
7	589340601	RETAINER	1	-
8	547842601	CARBURETTOR KIT *AT-15C*	1	-
9	526818101	SCREW ITXSCM	4	-
10	536549601	SEALING *From s/n 20240911609 -*	1	-
11	540054901	PURGE *From s/n 20240911609 -*	1	-
12	505156201	SCREW	1	-
13	510017202	CHOKE CONTROL ASSY	1	-
14	523056801	FUEL HOSE	1	-
15	589340701	CONTACT CLAMP	1	-
16	577536402	WIRING ASSY	1	-

Ref.	Article N.	Description	Qty	Kit
17	590458801	AIR FILTER *Nylon Mesh - 64 Micron Rating - Black*	1	-
17	590458802	AIR FILTER *Nylon Mesh - 25 Micron Rating - Yellow*	1	-
17	590458803	AIR FILTER ASSY *Non-Woven - Clear*	1	-
18	525344303	FUEL HOSE	1	-
19	731231401	HEXAGON NUT	1	-
20	525619201	SEALING	1	-
21	581143101	SCREW ITXSCFM	2	-
22	589550703	FILTER HOLDER ASSY *Black*	1	-
23	525619001	SEALING	1	-
24	547549201	PURGE *- up to s/n 20240911608, Sealing and purge*	1	-
1	547842601	CARBURETTOR KIT *AT-15C*	1	-
2	582366201	REPAIR KIT	1	-
3	582366401	GASKET KIT	1	-
4	596969201	GASKET KIT	1	-
1	591083601	HAND GUARD	1	-
2	596218201	SCREW KIT	1	-
3	503751801	PIN	1	-
4	596218101	KNEE JOINT ASSY	1	-
5	505199502	BRAKE BAND ASSY	1	-
6	501846104	CLUTCH COVER ASSY	1	-
7	505201601	GUARD	1	-
8	505199703	COVER	1	-
9	526221801	SCREW CITXPANT	5	-
10	592975201	CHAIN GUIDE	1	-
11	505199801	CHAIN GUIDE	1	-
12	575260404	CHAIN TENSIONER KIT	1	-
13	740480702	O-RING	1	-
14	503230063	WASHER	1	-
15	537017401	BEARING SLEEVE	1	-
16	505197301	NUT	2	-
1	577518202	CLUTCH ASSY	1	-
2	597645401	CLUTCH SPRING	2	-
3	596218303	CLUTCH DRUM ASSY	1	-
4	501457402	RIM SPROCKET	1	-

Ref.	Article N.	Description	Qty	Kit
5	599531501	NEEDLE BEARING	1	-
6	582814001	WORM WHEEL	1	-
7	505199911	OIL PUMP ASSY	1	-
8	503624901	SEALING PLUG	1	-
9	505200204	PUMP PISTON	1	-
10	503230060	WASHER	2	-
11	503891601	SPRING	1	-
12	720123300	PARALLEL PIN	2	-
13	505200101	PUMP CYLINDER	1	-
14	505200402	OIL HOSE	1	-
15	504710003	OIL PLUMMET	1	-
16	526818101	SCREW ITXSCM	2	-
17	505157001	ADJUSTMENT SCREW	1	-
18	721116430	GROOVED PIN	1	-
19	503891501	SPRING	1	-
20	505200301	CASING	1	-
1	575885703	SCREW ITXSCFM	3	-
2	503869301	SUPPORT	2	-
3	544331601	GUIDE PIN	1	-
4	582285201	CARBURETTOR AREA BASE	1	-
5	522620003	TANK CAP ASSY	1	-
6	503578901	HOLDER	1	-
7	589241101	GASKET	1	-
8	595303003	SNAP LOCKING	1	-
9	595897705	CRANKCASE KIT	1	-
10	503751801	PIN	1	-
11	596351401	CATCH	1	-
12	596351301	SPIKE	1	-
13	575793501	SCREW ITXPANM	2	-
14	581559201	BELLOWS	1	-
15	525887401	SCREW CITXPANT	1	-
16	525798103	SCREW ITXSCFT	1	-
17	537377902	CHAIN CATCHER	1	-
18	589721901	CHAIN GUIDE PLATE	1	-
19	537403501	FILTER	1	-
20	530026119	CHECK VALVE	1	-
21	505125801	DEFLECTION LIMITER	1	-
22	505217301	BAR BOLT	2	-

Ref.	Article N.	Description	Qty	Kit
23	720126952	PARALLEL PIN	2	-
24	589331301	SLEEVE	2	-
25	503215325	SCREW ITXSCM	6	-
26	582285901	AIR NOZZLE	1	-
27	526818101	SCREW ITXSCM	1	-
28	525824401	SCREW ITXSCM	1	-
29	501270802	GUIDE BUSHING	2	-
30	595897601	GASKET KIT	1	-
31	596911301	PROTECTIVE CAP *- up to s/n 20224908629*	1	-
1	596218502	CRANKSHAFT KIT	1	-
1	596218504	CRANKSHAFT KIT	1	-
2	501103101	NEEDLE BEARING	1	-
3	536789801	BALL BEARING	1	-
4	597576101	RADIAL SEAL *For SKF Ball bearing 5254342-XX*	1	-
4	536958201	RADIAL SEAL *For HQV Ball bearing 536789801*	1	-
1	591493401	CYLINDER COVER -	1	-
1	574519601	SPARK PLUG	1	-
2	590330508	CYLINDER KIT	1	-
3	525824907	SCREW ITXSCM	4	-
4	576717602	SLEEVE	4	-
5	591177401	GASKET	1	-
6	582702801	PISTON RING	1	-
7	582645602	PISTON ASSY	1	-
8	737441000	SNAP RING	2	-
9	501103101	NEEDLE BEARING	1	-
10	595897601	GASKET KIT	1	-
1	522620003	TANK CAP ASSY	1	-
2	589241101	GASKET	1	-
3	503578901	HOLDER	1	-
4	596550001	THROTTLE CABLE ASSY	1	-
5	596882002	ANTIVIBRATION ELEMENT	1	-
6	720182520	PARALLEL PIN	1	-
7	501007601	SUPPORT	1	-
8	590377401	ANTIVIBRATION ELEMENT	1	-
9	523085501	DEFLECTION LIMITER	1	-

Ref.	Article N.	Description	Qty	Kit
10	501152901	TANK VENT ASSY	1	-
11	529578202	FUEL HOSE ASSY *With magnet*	1	-
12	503443203	FUEL FILTER *18-40 µm (Blue)*	1	-
12	503443205	FUEL FILTER *18-40 µm (Blue) Mega pack (100 pcs)*	1	-
13	544099801	THROTTLE LOCKOUT	1	-
14	544099901	SPRING	1	-
15	505157701	THROTTLE	1	-
16	504106301	HANDLE INSERT	1	-
17	525887402	SCREW CITXPANT	1	-
18	596554002	FUEL TANK KIT	1	-
19	582794105	LABEL	1	-
1	582014901	HANDLE SYSTEM -	1	-
2	525798103	SCREW ITXSCFT -	2	-
3	525798101	SCREW ITXSCFT -	2	-
4	525755101	SCREW ITXSCFM -	1	-
5	595303401	ANTIVIBRATION ELEMENT -	1	-
6	503222401	LOCK NUT -	1	-
1	582777303	IGNITION MODULE ASSY -	1	-
2	596352901	CAP ASSY -	1	-
3	525755102	SCREW ITXSCFM -	2	-
4	503220401	NUT -	1	-
5	596230601	SCREW KIT -	1	-
6	522937805	FLYWHEEL ASSY -	1	-
1	583798701	MUFFLER KIT -	1	-
2	583799301	SPARK ARRESTER -	1	-

Ref.	Article N.	Description	Qty	Kit
3	501515402	SUPPORT -	1	-
4	724128759	SCREW CRPANM -	1	-
5	525825107	SCREW ITXSCM -	2	-
6	583799001	HEAT DEFLECTOR -	1	-
7	583798801	MUFFLER GASKET -	1	-
8	595897601	GASKET KIT -	1	-
9	582885501	SCREW -	2	-
1	531114506	SHORT BLOCK	1	-
1	582866901	COOLING AIR CONDUCTOR -	1	-
2	576356601	SCREW ITXSCT -	1	-
3	582650702	STARTER PULLEY -	1	-
4	505305125	STARTER ROPE -	1	-
5	525887401	SCREW CITXPANT -	2	-
6	505157902	SPRING CASSETTE ASSY -	1	-
7	596230301	STARTER ASSY -	1	-
8	525824501	SCREW CITXPANMO -	4	-
9	582503401	STARTER HOUSING -	1	-
10	537283201	SLEEVE -	1	-
11	537232501	STARTER HANDLE -	1	-
12	590613403	LABEL *545*	1	-
12	590613404	LABEL *545G*	1	-
1	582866901	COOLING AIR CONDUCTOR	1	-
2	576356601	SCREW ITXSCT	1	-

Ref.	Article N.	Description	Qty	Kit
4	503858902	STARTER ROPE	1	-
5	525887401	SCREW CITXPANT	2	-
6	505157902	SPRING CASSETTE ASSY	1	-
7	596230502	STARTER ASSY	1	-
8	525824501	SCREW CITXPANMO	4	-
9	582503401	STARTER HOUSING	1	-
10	537283201	SLEEVE	1	-
11	537232501	STARTER HANDLE	1	-
12	590613403	LABEL *545*	1	-
12	590613404	LABEL *545G*	1	-
13	582644902	TORSION SPRING	1	-
15	599289202	STARTER PULLEY	1	-
1	590260901	HANDLE INSERT	1	-
2	503220401	NUT	1	-
3	596230601	SCREW KIT	1	-
4	522937806	FLYWHEEL ASSY	1	-
5	526818102	SCREW ITXSCM	2	-
6	590260301	STATOR ASSY	1	-
7	588168603	FOIL ELEMENT	1	-
8	590688301	THERMOSTAT ASSY	1	-
9	582014902	HANDLE SYSTEM	1	-
10	503222401	LOCK NUT	1	-
11	590201901	CONTACT PLATE	1	-
12	537252501	CONTACT PLATE	1	-
13	595303401	ANTIVIBRATION ELEMENT	1	-
14	525755101	SCREW ITXSCFM	1	-
15	596201401	PROTECTION	1	-
16	590201801	COVER	1	-
17	578776102	SCREW ITXPANT	1	-
18	525798103	SCREW ITXSCFT	2	-
19	525798101	SCREW ITXSCFT	2	-
20	537088301	GROMMET	1	-
21	581143101	SCREW ITXSCFM	2	-
22	589550704	FILTER HOLDER ASSY *Blue*	1	-
23	525619001	SEALING	1	-
24	525619201	SEALING	1	-

Ref.	Article N.	Description	Qty	Kit
25	731231401	HEXAGON NUT	1	-
26	510017202	CHOKE CONTROL ASSY	1	-
27	505156201	SCREW	1	-

CLUTCH AND OIL PUMP

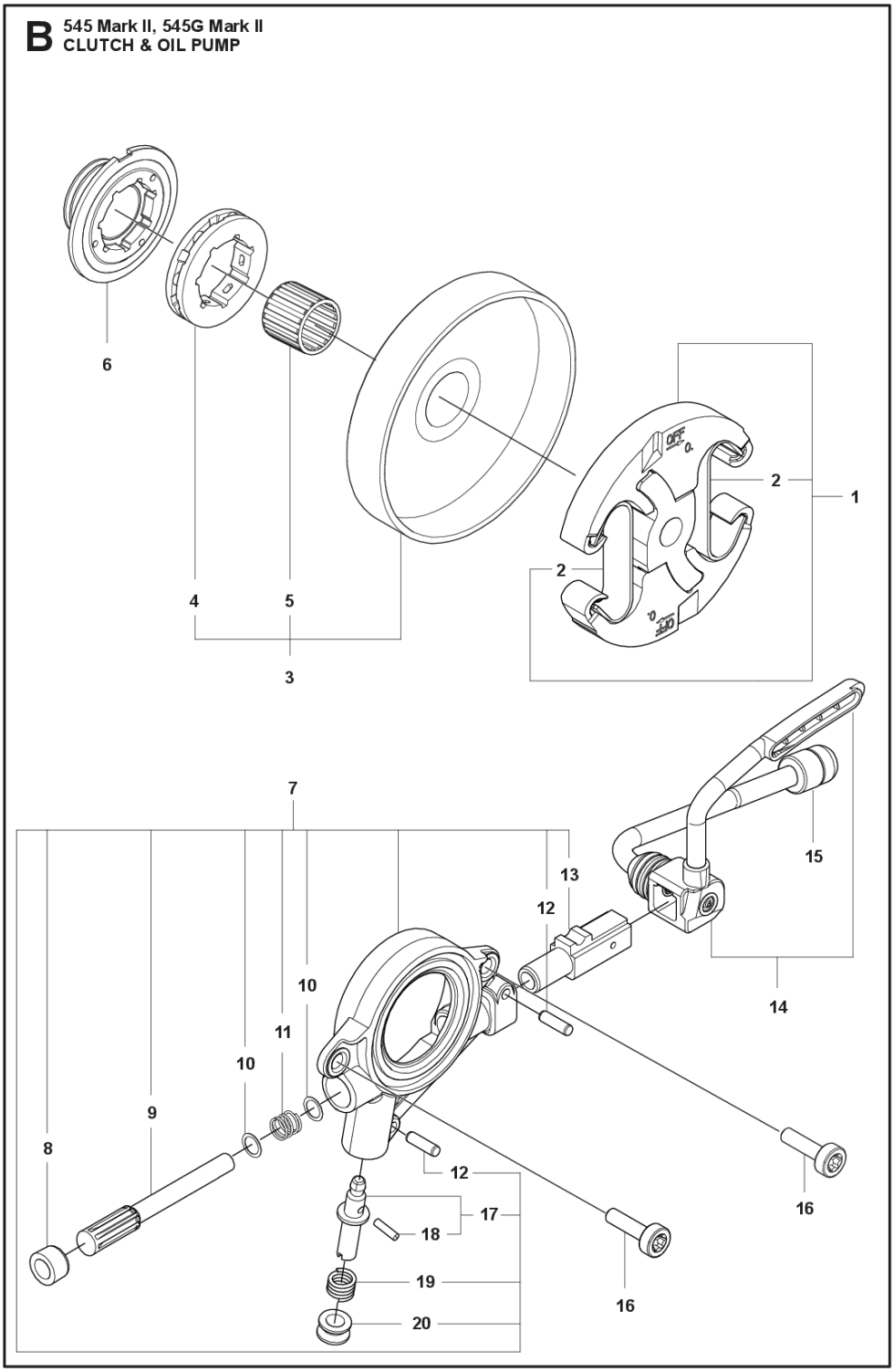

Ref.	Article N.	Description	Qty	Kit
1	503558511	TOOL -	1	-
2	522521101	COMBINATION WRENCH -	1	-
3	502215801	WRENCH -	1	-

Ref.	Article N.	Description	Qty	Kit
4	503558602	SPANNER -	1	-
5	575880701	WRENCH -	1	-
6	503621201	GREASE -	1	-
7	501911401	GREASE GUN -	1	-
8	583897101	DIAGNOSTIC TOOL KIT -	1	-
9	576183401	CABLE ASSY -	1	-
10	576952201	CABLE ASSY -	1	-
11	595967601	WINTER KIT -	1	-
12	740420100	O-RING -	2	-
13	503217016	SCREW CCRPANT -	1	-
14	594745301	BUMPER -	1	-
1	525824401	SCREW ITXSCM	1	-
2	526221801	SCREW CITXPANT	1	-
3	589584501	INSULATION WALL	1	-
4	593784901	INLET PIPE ASSY	1	-
5	503226503	SQUARE NUT	2	-
6	585195001	SUPPORT SLEEVE	1	-
7	589340601	RETAINER	1	-
8	547842601	CARBURETTOR KIT *AT-15C*	1	-
9	526818101	SCREW ITXSCM	4	-
10	536549601	SEALING *From s/n 20240911609 -*	1	-
11	540054901	PURGE *From s/n 20240911609 -*	1	-
12	505156201	SCREW	1	-
13	510017202	CHOKE CONTROL ASSY	1	-
14	523056801	FUEL HOSE	1	-
15	589340701	CONTACT CLAMP	1	-
16	577536402	WIRING ASSY	1	-

Ref.	Article N.	Description	Qty	Kit
17	590458801	AIR FILTER *Nylon Mesh - 64 Micron Rating - Black*	1	-
17	590458802	AIR FILTER *Nylon Mesh - 25 Micron Rating - Yellow*	1	-
17	590458803	AIR FILTER ASSY *Non-Woven - Clear*	1	-
18	525344303	FUEL HOSE	1	-
19	731231401	HEXAGON NUT	1	-
20	525619201	SEALING	1	-
21	581143101	SCREW ITXSCFM	2	-
22	589550703	FILTER HOLDER ASSY *Black*	1	-
23	525619001	SEALING	1	-
24	547549201	PURGE *- up to s/n 20240911608, Sealing and purge*	1	-
1	547842601	CARBURETTOR KIT *AT-15C*	1	-
2	582366201	REPAIR KIT	1	-
3	582366401	GASKET KIT	1	-
4	596969201	GASKET KIT	1	-
1	591083601	HAND GUARD	1	-
2	596218201	SCREW KIT	1	-
3	503751801	PIN	1	-
4	596218101	KNEE JOINT ASSY	1	-
5	505199502	BRAKE BAND ASSY	1	-
6	501846104	CLUTCH COVER ASSY	1	-
7	505201601	GUARD	1	-
8	505199703	COVER	1	-
9	526221801	SCREW CITXPANT	5	-
10	592975201	CHAIN GUIDE	1	-
11	505199801	CHAIN GUIDE	1	-
12	575260404	CHAIN TENSIONER KIT	1	-
13	740480702	O-RING	1	-
14	503230063	WASHER	1	-
15	537017401	BEARING SLEEVE	1	-
16	505197301	NUT	2	-
1	577518202	CLUTCH ASSY	1	-
2	597645401	CLUTCH SPRING	2	-
3	596218303	CLUTCH DRUM ASSY	1	-
4	501457402	RIM SPROCKET	1	-

Ref.	Article N.	Description	Qty	Kit
5	599531501	NEEDLE BEARING	1	-
6	582814001	WORM WHEEL	1	-
7	505199911	OIL PUMP ASSY	1	-
8	503624901	SEALING PLUG	1	-
9	505200204	PUMP PISTON	1	-
10	503230060	WASHER	2	-
11	503891601	SPRING	1	-
12	720123300	PARALLEL PIN	2	-
13	505200101	PUMP CYLINDER	1	-
14	505200402	OIL HOSE	1	-
15	504710003	OIL PLUMMET	1	-
16	526818101	SCREW ITXSCM	2	-
17	505157001	ADJUSTMENT SCREW	1	-
18	721116430	GROOVED PIN	1	-
19	503891501	SPRING	1	-
20	505200301	CASING	1	-
1	575885703	SCREW ITXSCFM	3	-
2	503869301	SUPPORT	2	-
3	544331601	GUIDE PIN	1	-
4	582285201	CARBURETTOR AREA BASE	1	-
5	522620003	TANK CAP ASSY	1	-
6	503578901	HOLDER	1	-
7	589241101	GASKET	1	-
8	595303003	SNAP LOCKING	1	-
9	595897705	CRANKCASE KIT	1	-
10	503751801	PIN	1	-
11	596351401	CATCH	1	-
12	596351301	SPIKE	1	-
13	575793501	SCREW ITXPANM	2	-
14	581559201	BELLOWS	1	-
15	525887401	SCREW CITXPANT	1	-
16	525798103	SCREW ITXSCFT	1	-
17	537377902	CHAIN CATCHER	1	-
18	589721901	CHAIN GUIDE PLATE	1	-
19	537403501	FILTER	1	-
20	530026119	CHECK VALVE	1	-
21	505125801	DEFLECTION LIMITER	1	-
22	505217301	BAR BOLT	2	-

Ref.	Article N.	Description	Qty	Kit
23	720126952	PARALLEL PIN	2	-
24	589331301	SLEEVE	2	-
25	503215325	SCREW ITXSCM	6	-
26	582285901	AIR NOZZLE	1	-
27	526818101	SCREW ITXSCM	1	-
28	525824401	SCREW ITXSCM	1	-
29	501270802	GUIDE BUSHING	2	-
30	595897601	GASKET KIT	1	-
31	596911301	PROTECTIVE CAP *- up to s/n 20224908629*	1	-
1	596218502	CRANKSHAFT KIT	1	-
1	596218504	CRANKSHAFT KIT	1	-
2	501103101	NEEDLE BEARING	1	-
3	536789801	BALL BEARING	1	-
4	597576101	RADIAL SEAL *For SKF Ball bearing 5254342-XX*	1	-
4	536958201	RADIAL SEAL *For HQV Ball bearing 536789801*	1	-
1	591493401	CYLINDER COVER -	1	-
1	574519601	SPARK PLUG	1	-
2	590330508	CYLINDER KIT	1	-
3	525824907	SCREW ITXSCM	4	-
4	576717602	SLEEVE	4	-
5	591177401	GASKET	1	-
6	582702801	PISTON RING	1	-
7	582645602	PISTON ASSY	1	-
8	737441000	SNAP RING	2	-
9	501103101	NEEDLE BEARING	1	-
10	595897601	GASKET KIT	1	-
1	522620003	TANK CAP ASSY	1	-
2	589241101	GASKET	1	-
3	503578901	HOLDER	1	-
4	596550001	THROTTLE CABLE ASSY	1	-
5	596882002	ANTIVIBRATION ELEMENT	1	-
6	720182520	PARALLEL PIN	1	-
7	501007601	SUPPORT	1	-
8	590377401	ANTIVIBRATION ELEMENT	1	-
9	523085501	DEFLECTION LIMITER	1	-

Ref.	Article N.	Description	Qty	Kit
10	501152901	TANK VENT ASSY	1	-
11	529578202	FUEL HOSE ASSY *With magnet*	1	-
12	503443203	FUEL FILTER *18-40 µm (Blue)*	1	-
12	503443205	FUEL FILTER *18-40 µm (Blue) Mega pack (100 pcs)*	1	-
13	544099801	THROTTLE LOCKOUT	1	-
14	544099901	SPRING	1	-
15	505157701	THROTTLE	1	-
16	504106301	HANDLE INSERT	1	-
17	525887402	SCREW CITXPANT	1	-
18	596554002	FUEL TANK KIT	1	-
19	582794105	LABEL	1	-
1	582014901	HANDLE SYSTEM -	1	-
2	525798103	SCREW ITXSCFT -	2	-
3	525798101	SCREW ITXSCFT -	2	-
4	525755101	SCREW ITXSCFM -	1	-
5	595303401	ANTIVIBRATION ELEMENT -	1	-
6	503222401	LOCK NUT -	1	-
1	582777303	IGNITION MODULE ASSY -	1	-
2	596352901	CAP ASSY -	1	-
3	525755102	SCREW ITXSCFM -	2	-
4	503220401	NUT -	1	-
5	596230601	SCREW KIT -	1	-
6	522937805	FLYWHEEL ASSY -	1	-
1	583798701	MUFFLER KIT -	1	-
2	583799301	SPARK ARRESTER -	1	-

Ref.	Article N.	Description	Qty	Kit
3	501515402	SUPPORT -	1	-
4	724128759	SCREW CRPANM -	1	-
5	525825107	SCREW ITXSCM -	2	-
6	583799001	HEAT DEFLECTOR -	1	-
7	583798801	MUFFLER GASKET -	1	-
8	595897601	GASKET KIT -	1	-
9	582885501	SCREW -	2	-
1	531114506	SHORT BLOCK	1	-
1	582866901	COOLING AIR CONDUCTOR -	1	-
2	576356601	SCREW ITXSCT -	1	-
3	582650702	STARTER PULLEY -	1	-
4	505305125	STARTER ROPE -	1	-
5	525887401	SCREW CITXPANT -	2	-
6	505157902	SPRING CASSETTE ASSY -	1	-
7	596230301	STARTER ASSY -	1	-
8	525824501	SCREW CITXPANMO -	4	-
9	582503401	STARTER HOUSING -	1	-
10	537283201	SLEEVE -	1	-
11	537232501	STARTER HANDLE -	1	-
12	590613403	LABEL *545*	1	-
12	590613404	LABEL *545G*	1	-
1	582866901	COOLING AIR CONDUCTOR	1	-
2	576356601	SCREW ITXSCT	1	-

Ref.	Article N.	Description	Qty	Kit
4	503858902	STARTER ROPE	1	-
5	525887401	SCREW CITXPANT	2	-
6	505157902	SPRING CASSETTE ASSY	1	-
7	596230502	STARTER ASSY	1	-
8	525824501	SCREW CITXPANMO	4	-
9	582503401	STARTER HOUSING	1	-
10	537283201	SLEEVE	1	-
11	537232501	STARTER HANDLE	1	-
12	590613403	LABEL *545*	1	-
12	590613404	LABEL *545G*	1	-
13	582644902	TORSION SPRING	1	-
15	599289202	STARTER PULLEY	1	-
1	590260901	HANDLE INSERT	1	-
2	503220401	NUT	1	-
3	596230601	SCREW KIT	1	-
4	522937806	FLYWHEEL ASSY	1	-
5	526818102	SCREW ITXSCM	2	-
6	590260301	STATOR ASSY	1	-
7	588168603	FOIL ELEMENT	1	-
8	590688301	THERMOSTAT ASSY	1	-
9	582014902	HANDLE SYSTEM	1	-
10	503222401	LOCK NUT	1	-
11	590201901	CONTACT PLATE	1	-
12	537252501	CONTACT PLATE	1	-
13	595303401	ANTIVIBRATION ELEMENT	1	-
14	525755101	SCREW ITXSCFM	1	-
15	596201401	PROTECTION	1	-
16	590201801	COVER	1	-
17	578776102	SCREW ITXPANT	1	-
18	525798103	SCREW ITXSCFT	2	-
19	525798101	SCREW ITXSCFT	2	-
20	537088301	GROMMET	1	-
21	581143101	SCREW ITXSCFM	2	-
22	589550704	FILTER HOLDER ASSY *Blue*	1	-
23	525619001	SEALING	1	-
24	525619201	SEALING	1	-

Ref.	Article N.	Description	Qty	Kit
25	731231401	HEXAGON NUT	1	-
26	510017202	CHOKE CONTROL ASSY	1	-
27	505156201	SCREW	1	-

CRANKCASE

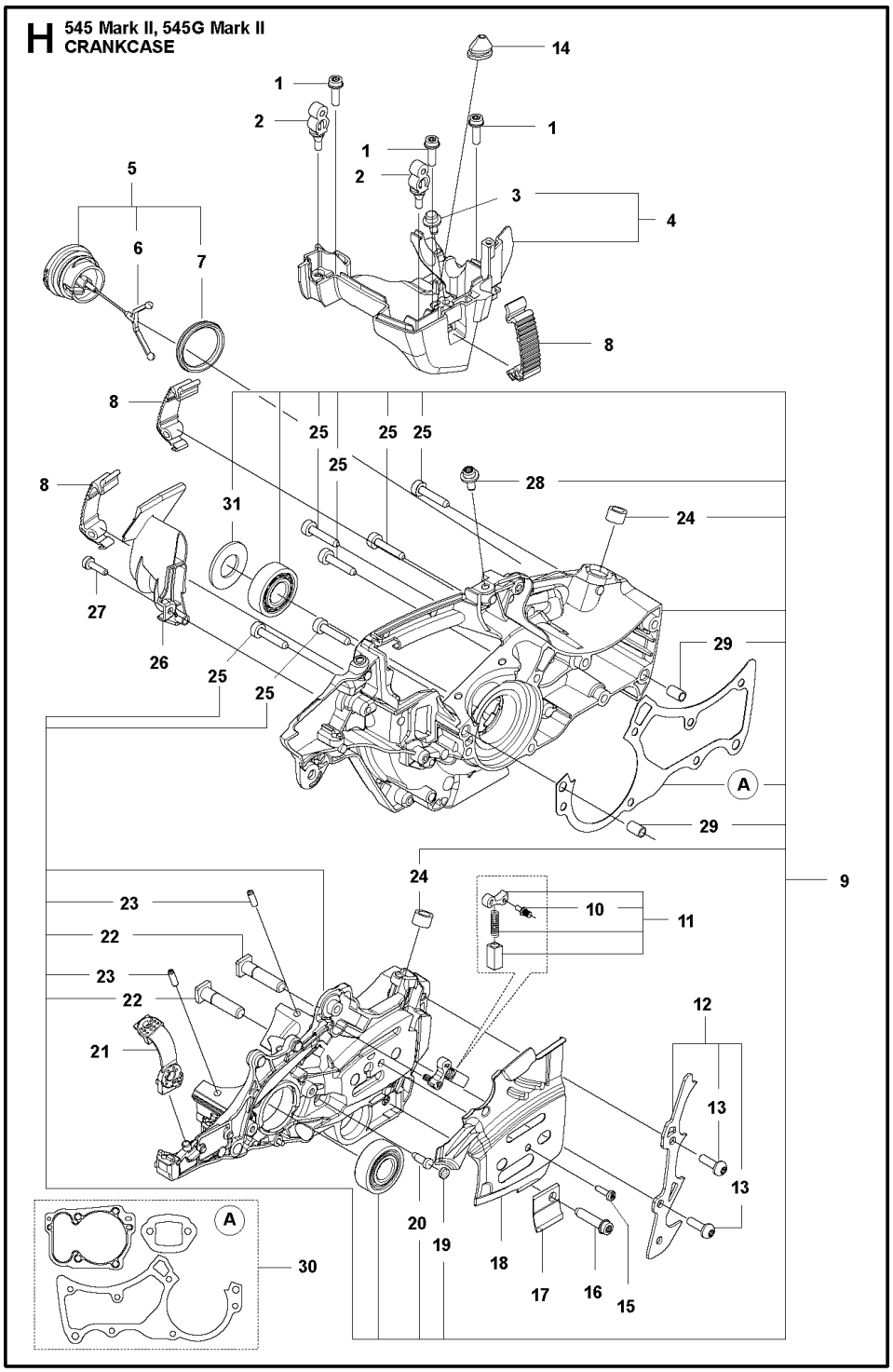

Ref.	Article N.	Description	Qty	Kit
1	503558511	TOOL -	1	-
2	522521101	COMBINATION WRENCH -	1	-
3	502215801	WRENCH -	1	-

Ref.	Article N.	Description	Qty	Kit
4	503558602	SPANNER -	1	-
5	575880701	WRENCH -	1	-
6	503621201	GREASE -	1	-
7	501911401	GREASE GUN -	1	-
8	583897101	DIAGNOSTIC TOOL KIT -	1	-
9	576183401	CABLE ASSY -	1	-
10	576952201	CABLE ASSY -	1	-
11	595967601	WINTER KIT -	1	-
12	740420100	O-RING -	2	-
13	503217016	SCREW CCRPANT -	1	-
14	594745301	BUMPER -	1	-
1	525824401	SCREW ITXSCM	1	-
2	526221801	SCREW CITXPANT	1	-
3	589584501	INSULATION WALL	1	-
4	593784901	INLET PIPE ASSY	1	-
5	503226503	SQUARE NUT	2	-
6	585195001	SUPPORT SLEEVE	1	-
7	589340601	RETAINER	1	-
8	547842601	CARBURETTOR KIT *AT-15C*	1	-
9	526818101	SCREW ITXSCM	4	-
10	536549601	SEALING *From s/n 20240911609 -*	1	-
11	540054901	PURGE *From s/n 20240911609 -*	1	-
12	505156201	SCREW	1	-
13	510017202	CHOKE CONTROL ASSY	1	-
14	523056801	FUEL HOSE	1	-
15	589340701	CONTACT CLAMP	1	-
16	577536402	WIRING ASSY	1	-

Ref.	Article N.	Description	Qty	Kit
17	590458801	AIR FILTER *Nylon Mesh - 64 Micron Rating - Black*	1	-
17	590458802	AIR FILTER *Nylon Mesh - 25 Micron Rating - Yellow*	1	-
17	590458803	AIR FILTER ASSY *Non-Woven - Clear*	1	-
18	525344303	FUEL HOSE	1	-
19	731231401	HEXAGON NUT	1	-
20	525619201	SEALING	1	-
21	581143101	SCREW ITXSCFM	2	-
22	589550703	FILTER HOLDER ASSY *Black*	1	-
23	525619001	SEALING	1	-
24	547549201	PURGE *- up to s/n 20240911608, Sealing and purge*	1	-
1	547842601	CARBURETTOR KIT *AT-15C*	1	-
2	582366201	REPAIR KIT	1	-
3	582366401	GASKET KIT	1	-
4	596969201	GASKET KIT	1	-
1	591083601	HAND GUARD	1	-
2	596218201	SCREW KIT	1	-
3	503751801	PIN	1	-
4	596218101	KNEE JOINT ASSY	1	-
5	505199502	BRAKE BAND ASSY	1	-
6	501846104	CLUTCH COVER ASSY	1	-
7	505201601	GUARD	1	-
8	505199703	COVER	1	-
9	526221801	SCREW CITXPANT	5	-
10	592975201	CHAIN GUIDE	1	-
11	505199801	CHAIN GUIDE	1	-
12	575260404	CHAIN TENSIONER KIT	1	-
13	740480702	O-RING	1	-
14	503230063	WASHER	1	-
15	537017401	BEARING SLEEVE	1	-
16	505197301	NUT	2	-
1	577518202	CLUTCH ASSY	1	-
2	597645401	CLUTCH SPRING	2	-
3	596218303	CLUTCH DRUM ASSY	1	-
4	501457402	RIM SPROCKET	1	-

Ref.	Article N.	Description	Qty	Kit
5	599531501	NEEDLE BEARING	1	-
6	582814001	WORM WHEEL	1	-
7	505199911	OIL PUMP ASSY	1	-
8	503624901	SEALING PLUG	1	-
9	505200204	PUMP PISTON	1	-
10	503230060	WASHER	2	-
11	503891601	SPRING	1	-
12	720123300	PARALLEL PIN	2	-
13	505200101	PUMP CYLINDER	1	-
14	505200402	OIL HOSE	1	-
15	504710003	OIL PLUMMET	1	-
16	526818101	SCREW ITXSCM	2	-
17	505157001	ADJUSTMENT SCREW	1	-
18	721116430	GROOVED PIN	1	-
19	503891501	SPRING	1	-
20	505200301	CASING	1	-
1	575885703	SCREW ITXSCFM	3	-
2	503869301	SUPPORT	2	-
3	544331601	GUIDE PIN	1	-
4	582285201	CARBURETTOR AREA BASE	1	-
5	522620003	TANK CAP ASSY	1	-
6	503578901	HOLDER	1	-
7	589241101	GASKET	1	-
8	595303003	SNAP LOCKING	1	-
9	595897705	CRANKCASE KIT	1	-
10	503751801	PIN	1	-
11	596351401	CATCH	1	-
12	596351301	SPIKE	1	-
13	575793501	SCREW ITXPANM	2	-
14	581559201	BELLOWS	1	-
15	525887401	SCREW CITXPANT	1	-
16	525798103	SCREW ITXSCFT	1	-
17	537377902	CHAIN CATCHER	1	-
18	589721901	CHAIN GUIDE PLATE	1	-
19	537403501	FILTER	1	-
20	530026119	CHECK VALVE	1	-
21	505125801	DEFLECTION LIMITER	1	-
22	505217301	BAR BOLT	2	-

Ref.	Article N.	Description	Qty	Kit
23	720126952	PARALLEL PIN	2	-
24	589331301	SLEEVE	2	-
25	503215325	SCREW ITXSCM	6	-
26	582285901	AIR NOZZLE	1	-
27	526818101	SCREW ITXSCM	1	-
28	525824401	SCREW ITXSCM	1	-
29	501270802	GUIDE BUSHING	2	-
30	595897601	GASKET KIT	1	-
31	596911301	PROTECTIVE CAP *- up to s/n 20224908629*	1	-
1	596218502	CRANKSHAFT KIT	1	-
1	596218504	CRANKSHAFT KIT	1	-
2	501103101	NEEDLE BEARING	1	-
3	536789801	BALL BEARING	1	-
4	597576101	RADIAL SEAL *For SKF Ball bearing 5254342-XX*	1	-
4	536958201	RADIAL SEAL *For HQV Ball bearing 536789801*	1	-
1	591493401	CYLINDER COVER -	1	-
1	574519601	SPARK PLUG	1	-
2	590330508	CYLINDER KIT	1	-
3	525824907	SCREW ITXSCM	4	-
4	576717602	SLEEVE	4	-
5	591177401	GASKET	1	-
6	582702801	PISTON RING	1	-
7	582645602	PISTON ASSY	1	-
8	737441000	SNAP RING	2	-
9	501103101	NEEDLE BEARING	1	-
10	595897601	GASKET KIT	1	-
1	522620003	TANK CAP ASSY	1	-
2	589241101	GASKET	1	-
3	503578901	HOLDER	1	-
4	596550001	THROTTLE CABLE ASSY	1	-
5	596882002	ANTIVIBRATION ELEMENT	1	-
6	720182520	PARALLEL PIN	1	-
7	501007601	SUPPORT	1	-
8	590377401	ANTIVIBRATION ELEMENT	1	-
9	523085501	DEFLECTION LIMITER	1	-

Ref.	Article N.	Description	Qty	Kit
10	501152901	TANK VENT ASSY	1	-
11	529578202	FUEL HOSE ASSY *With magnet*	1	-
12	503443203	FUEL FILTER *18-40 µm (Blue)*	1	-
12	503443205	FUEL FILTER *18-40 µm (Blue) Mega pack (100 pcs)*	1	-
13	544099801	THROTTLE LOCKOUT	1	-
14	544099901	SPRING	1	-
15	505157701	THROTTLE	1	-
16	504106301	HANDLE INSERT	1	-
17	525887402	SCREW CITXPANT	1	-
18	596554002	FUEL TANK KIT	1	-
19	582794105	LABEL	1	-
1	582014901	HANDLE SYSTEM -	1	-
2	525798103	SCREW ITXSCFT -	2	-
3	525798101	SCREW ITXSCFT -	2	-
4	525755101	SCREW ITXSCFM -	1	-
5	595303401	ANTIVIBRATION ELEMENT -	1	-
6	503222401	LOCK NUT -	1	-
1	582777303	IGNITION MODULE ASSY -	1	-
2	596352901	CAP ASSY -	1	-
3	525755102	SCREW ITXSCFM -	2	-
4	503220401	NUT -	1	-
5	596230601	SCREW KIT -	1	-
6	522937805	FLYWHEEL ASSY -	1	-
1	583798701	MUFFLER KIT -	1	-
2	583799301	SPARK ARRESTER -	1	-

Ref.	Article N.	Description	Qty	Kit
3	501515402	SUPPORT -	1	-
4	724128759	SCREW CRPANM -	1	-
5	525825107	SCREW ITXSCM -	2	-
6	583799001	HEAT DEFLECTOR -	1	-
7	583798801	MUFFLER GASKET -	1	-
8	595897601	GASKET KIT -	1	-
9	582885501	SCREW -	2	-
1	531114506	SHORT BLOCK	1	-
1	582866901	COOLING AIR CONDUCTOR -	1	-
2	576356601	SCREW ITXSCT -	1	-
3	582650702	STARTER PULLEY -	1	-
4	505305125	STARTER ROPE -	1	-
5	525887401	SCREW CITXPANT -	2	-
6	505157902	SPRING CASSETTE ASSY -	1	-
7	596230301	STARTER ASSY -	1	-
8	525824501	SCREW CITXPANMO -	4	-
9	582503401	STARTER HOUSING -	1	-
10	537283201	SLEEVE -	1	-
11	537232501	STARTER HANDLE -	1	-
12	590613403	LABEL *545*	1	-
12	590613404	LABEL *545G*	1	-
1	582866901	COOLING AIR CONDUCTOR	1	-
2	576356601	SCREW ITXSCT	1	-

Ref.	Article N.	Description	Qty	Kit
4	503858902	STARTER ROPE	1	-
5	525887401	SCREW CITXPANT	2	-
6	505157902	SPRING CASSETTE ASSY	1	-
7	596230502	STARTER ASSY	1	-
8	525824501	SCREW CITXPANMO	4	-
9	582503401	STARTER HOUSING	1	-
10	537283201	SLEEVE	1	-
11	537232501	STARTER HANDLE	1	-
12	590613403	LABEL *545*	1	-
12	590613404	LABEL *545G*	1	-
13	582644902	TORSION SPRING	1	-
15	599289202	STARTER PULLEY	1	-
1	590260901	HANDLE INSERT	1	-
2	503220401	NUT	1	-
3	596230601	SCREW KIT	1	-
4	522937806	FLYWHEEL ASSY	1	-
5	526818102	SCREW ITXSCM	2	-
6	590260301	STATOR ASSY	1	-
7	588168603	FOIL ELEMENT	1	-
8	590688301	THERMOSTAT ASSY	1	-
9	582014902	HANDLE SYSTEM	1	-
10	503222401	LOCK NUT	1	-
11	590201901	CONTACT PLATE	1	-
12	537252501	CONTACT PLATE	1	-
13	595303401	ANTIVIBRATION ELEMENT	1	-
14	525755101	SCREW ITXSCFM	1	-
15	596201401	PROTECTION	1	-
16	590201801	COVER	1	-
17	578776102	SCREW ITXPANT	1	-
18	525798103	SCREW ITXSCFT	2	-
19	525798101	SCREW ITXSCFT	2	-
20	537088301	GROMMET	1	-
21	581143101	SCREW ITXSCFM	2	-
22	589550704	FILTER HOLDER ASSY *Blue*	1	-
23	525619001	SEALING	1	-
24	525619201	SEALING	1	-

Ref.	Article N.	Description	Qty	Kit
25	731231401	HEXAGON NUT	1	-
26	510017202	CHOKE CONTROL ASSY	1	-
27	505156201	SCREW	1	-

CRANKSHAFT

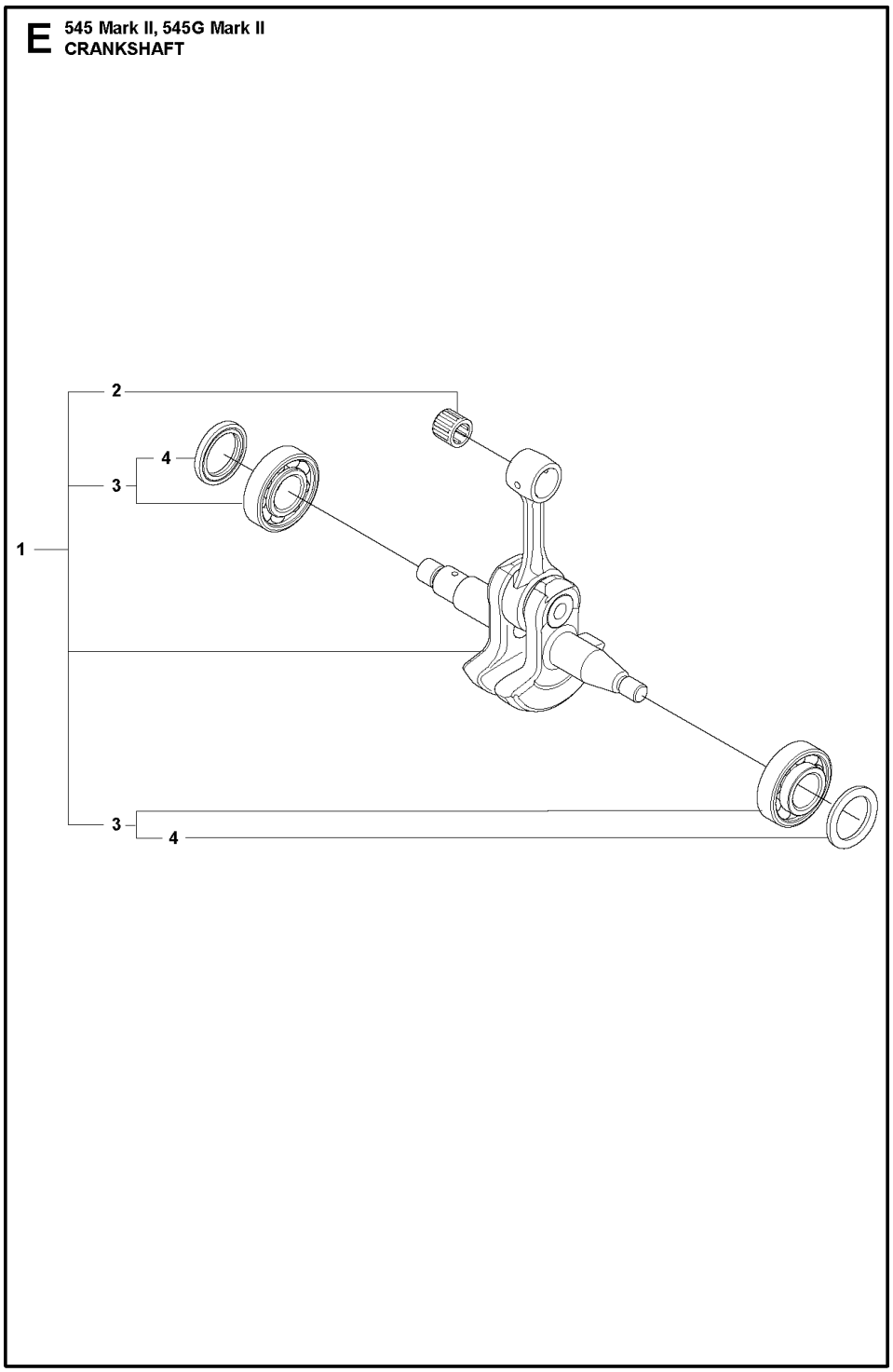

Ref.	Article N.	Description	Qty	Kit
1	503558511	TOOL -	1	-
2	522521101	COMBINATION WRENCH -	1	-
3	502215801	WRENCH -	1	-

Ref.	Article N.	Description	Qty	Kit
4	503558602	SPANNER -	1	-
5	575880701	WRENCH -	1	-
6	503621201	GREASE -	1	-
7	501911401	GREASE GUN -	1	-
8	583897101	DIAGNOSTIC TOOL KIT -	1	-
9	576183401	CABLE ASSY -	1	-
10	576952201	CABLE ASSY -	1	-
11	595967601	WINTER KIT -	1	-
12	740420100	O-RING -	2	-
13	503217016	SCREW CCRPANT -	1	-
14	594745301	BUMPER -	1	-
1	525824401	SCREW ITXSCM	1	-
2	526221801	SCREW CITXPANT	1	-
3	589584501	INSULATION WALL	1	-
4	593784901	INLET PIPE ASSY	1	-
5	503226503	SQUARE NUT	2	-
6	585195001	SUPPORT SLEEVE	1	-
7	589340601	RETAINER	1	-
8	547842601	CARBURETTOR KIT *AT-15C*	1	-
9	526818101	SCREW ITXSCM	4	-
10	536549601	SEALING *From s/n 20240911609 -*	1	-
11	540054901	PURGE *From s/n 20240911609 -*	1	-
12	505156201	SCREW	1	-
13	510017202	CHOKE CONTROL ASSY	1	-
14	523056801	FUEL HOSE	1	-
15	589340701	CONTACT CLAMP	1	-
16	577536402	WIRING ASSY	1	-

Ref.	Article N.	Description	Qty	Kit
17	590458801	AIR FILTER *Nylon Mesh - 64 Micron Rating - Black*	1	-
17	590458802	AIR FILTER *Nylon Mesh - 25 Micron Rating - Yellow*	1	-
17	590458803	AIR FILTER ASSY *Non-Woven - Clear*	1	-
18	525344303	FUEL HOSE	1	-
19	731231401	HEXAGON NUT	1	-
20	525619201	SEALING	1	-
21	581143101	SCREW ITXSCFM	2	-
22	589550703	FILTER HOLDER ASSY *Black*	1	-
23	525619001	SEALING	1	-
24	547549201	PURGE *- up to s/n 20240911608, Sealing and purge*	1	-
1	547842601	CARBURETTOR KIT *AT-15C*	1	-
2	582366201	REPAIR KIT	1	-
3	582366401	GASKET KIT	1	-
4	596969201	GASKET KIT	1	-
1	591083601	HAND GUARD	1	-
2	596218201	SCREW KIT	1	-
3	503751801	PIN	1	-
4	596218101	KNEE JOINT ASSY	1	-
5	505199502	BRAKE BAND ASSY	1	-
6	501846104	CLUTCH COVER ASSY	1	-
7	505201601	GUARD	1	-
8	505199703	COVER	1	-
9	526221801	SCREW CITXPANT	5	-
10	592975201	CHAIN GUIDE	1	-
11	505199801	CHAIN GUIDE	1	-
12	575260404	CHAIN TENSIONER KIT	1	-
13	740480702	O-RING	1	-
14	503230063	WASHER	1	-
15	537017401	BEARING SLEEVE	1	-
16	505197301	NUT	2	-
1	577518202	CLUTCH ASSY	1	-
2	597645401	CLUTCH SPRING	2	-
3	596218303	CLUTCH DRUM ASSY	1	-
4	501457402	RIM SPROCKET	1	-

Ref.	Article N.	Description	Qty	Kit
5	599531501	NEEDLE BEARING	1	-
6	582814001	WORM WHEEL	1	-
7	505199911	OIL PUMP ASSY	1	-
8	503624901	SEALING PLUG	1	-
9	505200204	PUMP PISTON	1	-
10	503230060	WASHER	2	-
11	503891601	SPRING	1	-
12	720123300	PARALLEL PIN	2	-
13	505200101	PUMP CYLINDER	1	-
14	505200402	OIL HOSE	1	-
15	504710003	OIL PLUMMET	1	-
16	526818101	SCREW ITXSCM	2	-
17	505157001	ADJUSTMENT SCREW	1	-
18	721116430	GROOVED PIN	1	-
19	503891501	SPRING	1	-
20	505200301	CASING	1	-
1	575885703	SCREW ITXSCFM	3	-
2	503869301	SUPPORT	2	-
3	544331601	GUIDE PIN	1	-
4	582285201	CARBURETTOR AREA BASE	1	-
5	522620003	TANK CAP ASSY	1	-
6	503578901	HOLDER	1	-
7	589241101	GASKET	1	-
8	595303003	SNAP LOCKING	1	-
9	595897705	CRANKCASE KIT	1	-
10	503751801	PIN	1	-
11	596351401	CATCH	1	-
12	596351301	SPIKE	1	-
13	575793501	SCREW ITXPANM	2	-
14	581559201	BELLOWS	1	-
15	525887401	SCREW CITXPANT	1	-
16	525798103	SCREW ITXSCFT	1	-
17	537377902	CHAIN CATCHER	1	-
18	589721901	CHAIN GUIDE PLATE	1	-
19	537403501	FILTER	1	-
20	530026119	CHECK VALVE	1	-
21	505125801	DEFLECTION LIMITER	1	-
22	505217301	BAR BOLT	2	-

Ref.	Article N.	Description	Qty	Kit
23	720126952	PARALLEL PIN	2	-
24	589331301	SLEEVE	2	-
25	503215325	SCREW ITXSCM	6	-
26	582285901	AIR NOZZLE	1	-
27	526818101	SCREW ITXSCM	1	-
28	525824401	SCREW ITXSCM	1	-
29	501270802	GUIDE BUSHING	2	-
30	595897601	GASKET KIT	1	-
31	596911301	PROTECTIVE CAP *- up to s/n 20224908629*	1	-
1	596218502	CRANKSHAFT KIT	1	-
1	596218504	CRANKSHAFT KIT	1	-
2	501103101	NEEDLE BEARING	1	-
3	536789801	BALL BEARING	1	-
4	597576101	RADIAL SEAL *For SKF Ball bearing 5254342-XX*	1	-
4	536958201	RADIAL SEAL *For HQV Ball bearing 536789801*	1	-
1	591493401	CYLINDER COVER -	1	-
1	574519601	SPARK PLUG	1	-
2	590330508	CYLINDER KIT	1	-
3	525824907	SCREW ITXSCM	4	-
4	576717602	SLEEVE	4	-
5	591177401	GASKET	1	-
6	582702801	PISTON RING	1	-
7	582645602	PISTON ASSY	1	-
8	737441000	SNAP RING	2	-
9	501103101	NEEDLE BEARING	1	-
10	595897601	GASKET KIT	1	-
1	522620003	TANK CAP ASSY	1	-
2	589241101	GASKET	1	-
3	503578901	HOLDER	1	-
4	596550001	THROTTLE CABLE ASSY	1	-
5	596882002	ANTIVIBRATION ELEMENT	1	-
6	720182520	PARALLEL PIN	1	-
7	501007601	SUPPORT	1	-
8	590377401	ANTIVIBRATION ELEMENT	1	-
9	523085501	DEFLECTION LIMITER	1	-

Ref.	Article N.	Description	Qty	Kit
10	501152901	TANK VENT ASSY	1	-
11	529578202	FUEL HOSE ASSY *With magnet*	1	-
12	503443203	FUEL FILTER *18-40 µm (Blue)*	1	-
12	503443205	FUEL FILTER *18-40 µm (Blue) Mega pack (100 pcs)*	1	-
13	544099801	THROTTLE LOCKOUT	1	-
14	544099901	SPRING	1	-
15	505157701	THROTTLE	1	-
16	504106301	HANDLE INSERT	1	-
17	525887402	SCREW CITXPANT	1	-
18	596554002	FUEL TANK KIT	1	-
19	582794105	LABEL	1	-
1	582014901	HANDLE SYSTEM -	1	-
2	525798103	SCREW ITXSCFT -	2	-
3	525798101	SCREW ITXSCFT -	2	-
4	525755101	SCREW ITXSCFM -	1	-
5	595303401	ANTIVIBRATION ELEMENT -	1	-
6	503222401	LOCK NUT -	1	-
1	582777303	IGNITION MODULE ASSY -	1	-
2	596352901	CAP ASSY -	1	-
3	525755102	SCREW ITXSCFM -	2	-
4	503220401	NUT -	1	-
5	596230601	SCREW KIT -	1	-
6	522937805	FLYWHEEL ASSY -	1	-
1	583798701	MUFFLER KIT -	1	-
2	583799301	SPARK ARRESTER -	1	-

Ref.	Article N.	Description	Qty	Kit
3	501515402	SUPPORT -	1	-
4	724128759	SCREW CRPANM -	1	-
5	525825107	SCREW ITXSCM -	2	-
6	583799001	HEAT DEFLECTOR -	1	-
7	583798801	MUFFLER GASKET -	1	-
8	595897601	GASKET KIT -	1	-
9	582885501	SCREW -	2	-
1	531114506	SHORT BLOCK	1	-
1	582866901	COOLING AIR CONDUCTOR -	1	-
2	576356601	SCREW ITXSCT -	1	-
3	582650702	STARTER PULLEY -	1	-
4	505305125	STARTER ROPE -	1	-
5	525887401	SCREW CITXPANT -	2	-
6	505157902	SPRING CASSETTE ASSY -	1	-
7	596230301	STARTER ASSY -	1	-
8	525824501	SCREW CITXPANMO -	4	-
9	582503401	STARTER HOUSING -	1	-
10	537283201	SLEEVE -	1	-
11	537232501	STARTER HANDLE -	1	-
12	590613403	LABEL *545*	1	-
12	590613404	LABEL *545G*	1	-
1	582866901	COOLING AIR CONDUCTOR	1	-
2	576356601	SCREW ITXSCT	1	-

Ref.	Article N.	Description	Qty	Kit
4	503858902	STARTER ROPE	1	-
5	525887401	SCREW CITXPANT	2	-
6	505157902	SPRING CASSETTE ASSY	1	-
7	596230502	STARTER ASSY	1	-
8	525824501	SCREW CITXPANMO	4	-
9	582503401	STARTER HOUSING	1	-
10	537283201	SLEEVE	1	-
11	537232501	STARTER HANDLE	1	-
12	590613403	LABEL *545*	1	-
12	590613404	LABEL *545G*	1	-
13	582644902	TORSION SPRING	1	-
15	599289202	STARTER PULLEY	1	-
1	590260901	HANDLE INSERT	1	-
2	503220401	NUT	1	-
3	596230601	SCREW KIT	1	-
4	522937806	FLYWHEEL ASSY	1	-
5	526818102	SCREW ITXSCM	2	-
6	590260301	STATOR ASSY	1	-
7	588168603	FOIL ELEMENT	1	-
8	590688301	THERMOSTAT ASSY	1	-
9	582014902	HANDLE SYSTEM	1	-
10	503222401	LOCK NUT	1	-
11	590201901	CONTACT PLATE	1	-
12	537252501	CONTACT PLATE	1	-
13	595303401	ANTIVIBRATION ELEMENT	1	-
14	525755101	SCREW ITXSCFM	1	-
15	596201401	PROTECTION	1	-
16	590201801	COVER	1	-
17	578776102	SCREW ITXPANT	1	-
18	525798103	SCREW ITXSCFT	2	-
19	525798101	SCREW ITXSCFT	2	-
20	537088301	GROMMET	1	-
21	581143101	SCREW ITXSCFM	2	-
22	589550704	FILTER HOLDER ASSY *Blue*	1	-
23	525619001	SEALING	1	-
24	525619201	SEALING	1	-

Ref.	Article N.	Description	Qty	Kit
25	731231401	HEXAGON NUT	1	-
26	510017202	CHOKE CONTROL ASSY	1	-
27	505156201	SCREW	1	-

CYLINDER COVER

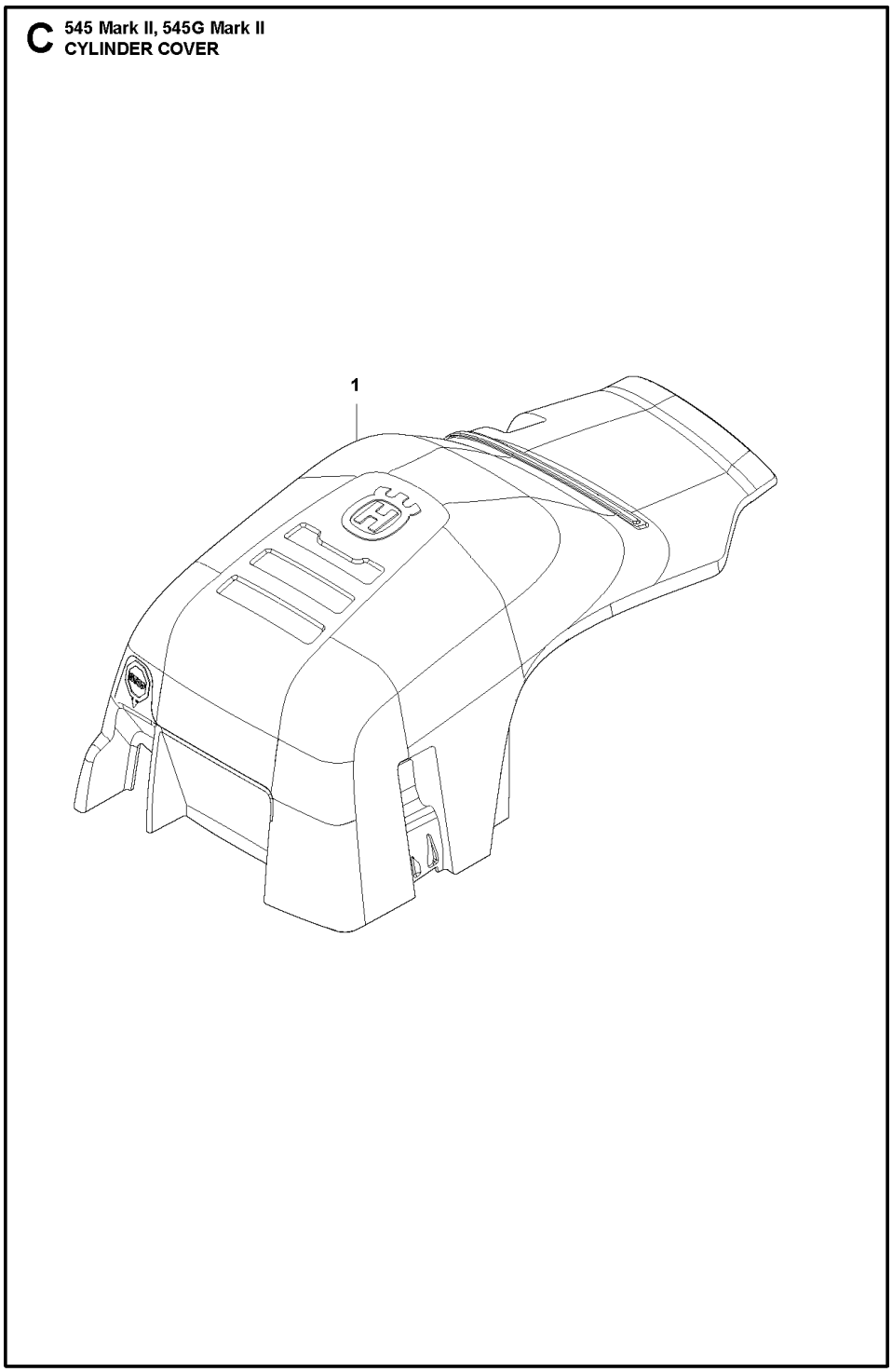

Ref.	Article N.	Description	Qty	Kit
1	503558511	TOOL -	1	-
2	522521101	COMBINATION WRENCH -	1	-
3	502215801	WRENCH -	1	-

Ref.	Article N.	Description	Qty	Kit
4	503558602	SPANNER -	1	-
5	575880701	WRENCH -	1	-
6	503621201	GREASE -	1	-
7	501911401	GREASE GUN -	1	-
8	583897101	DIAGNOSTIC TOOL KIT -	1	-
9	576183401	CABLE ASSY -	1	-
10	576952201	CABLE ASSY -	1	-
11	595967601	WINTER KIT -	1	-
12	740420100	O-RING -	2	-
13	503217016	SCREW CCRPANT -	1	-
14	594745301	BUMPER -	1	-
1	525824401	SCREW ITXSCM	1	-
2	526221801	SCREW CITXPANT	1	-
3	589584501	INSULATION WALL	1	-
4	593784901	INLET PIPE ASSY	1	-
5	503226503	SQUARE NUT	2	-
6	585195001	SUPPORT SLEEVE	1	-
7	589340601	RETAINER	1	-
8	547842601	CARBURETTOR KIT *AT-15C*	1	-
9	526818101	SCREW ITXSCM	4	-
10	536549601	SEALING *From s/n 20240911609 -*	1	-
11	540054901	PURGE *From s/n 20240911609 -*	1	-
12	505156201	SCREW	1	-
13	510017202	CHOKE CONTROL ASSY	1	-
14	523056801	FUEL HOSE	1	-
15	589340701	CONTACT CLAMP	1	-
16	577536402	WIRING ASSY	1	-

Ref.	Article N.	Description	Qty	Kit
17	590458801	AIR FILTER *Nylon Mesh - 64 Micron Rating - Black*	1	-
17	590458802	AIR FILTER *Nylon Mesh - 25 Micron Rating - Yellow*	1	-
17	590458803	AIR FILTER ASSY *Non-Woven - Clear*	1	-
18	525344303	FUEL HOSE	1	-
19	731231401	HEXAGON NUT	1	-
20	525619201	SEALING	1	-
21	581143101	SCREW ITXSCFM	2	-
22	589550703	FILTER HOLDER ASSY *Black*	1	-
23	525619001	SEALING	1	-
24	547549201	PURGE *- up to s/n 20240911608, Sealing and purge*	1	-
1	547842601	CARBURETTOR KIT *AT-15C*	1	-
2	582366201	REPAIR KIT	1	-
3	582366401	GASKET KIT	1	-
4	596969201	GASKET KIT	1	-
1	591083601	HAND GUARD	1	-
2	596218201	SCREW KIT	1	-
3	503751801	PIN	1	-
4	596218101	KNEE JOINT ASSY	1	-
5	505199502	BRAKE BAND ASSY	1	-
6	501846104	CLUTCH COVER ASSY	1	-
7	505201601	GUARD	1	-
8	505199703	COVER	1	-
9	526221801	SCREW CITXPANT	5	-
10	592975201	CHAIN GUIDE	1	-
11	505199801	CHAIN GUIDE	1	-
12	575260404	CHAIN TENSIONER KIT	1	-
13	740480702	O-RING	1	-
14	503230063	WASHER	1	-
15	537017401	BEARING SLEEVE	1	-
16	505197301	NUT	2	-
1	577518202	CLUTCH ASSY	1	-
2	597645401	CLUTCH SPRING	2	-
3	596218303	CLUTCH DRUM ASSY	1	-
4	501457402	RIM SPROCKET	1	-

Ref.	Article N.	Description	Qty	Kit
5	599531501	NEEDLE BEARING	1	-
6	582814001	WORM WHEEL	1	-
7	505199911	OIL PUMP ASSY	1	-
8	503624901	SEALING PLUG	1	-
9	505200204	PUMP PISTON	1	-
10	503230060	WASHER	2	-
11	503891601	SPRING	1	-
12	720123300	PARALLEL PIN	2	-
13	505200101	PUMP CYLINDER	1	-
14	505200402	OIL HOSE	1	-
15	504710003	OIL PLUMMET	1	-
16	526818101	SCREW ITXSCM	2	-
17	505157001	ADJUSTMENT SCREW	1	-
18	721116430	GROOVED PIN	1	-
19	503891501	SPRING	1	-
20	505200301	CASING	1	-
1	575885703	SCREW ITXSCFM	3	-
2	503869301	SUPPORT	2	-
3	544331601	GUIDE PIN	1	-
4	582285201	CARBURETTOR AREA BASE	1	-
5	522620003	TANK CAP ASSY	1	-
6	503578901	HOLDER	1	-
7	589241101	GASKET	1	-
8	595303003	SNAP LOCKING	1	-
9	595897705	CRANKCASE KIT	1	-
10	503751801	PIN	1	-
11	596351401	CATCH	1	-
12	596351301	SPIKE	1	-
13	575793501	SCREW ITXPANM	2	-
14	581559201	BELLOWS	1	-
15	525887401	SCREW CITXPANT	1	-
16	525798103	SCREW ITXSCFT	1	-
17	537377902	CHAIN CATCHER	1	-
18	589721901	CHAIN GUIDE PLATE	1	-
19	537403501	FILTER	1	-
20	530026119	CHECK VALVE	1	-
21	505125801	DEFLECTION LIMITER	1	-
22	505217301	BAR BOLT	2	-

Ref.	Article N.	Description	Qty	Kit
23	720126952	PARALLEL PIN	2	-
24	589331301	SLEEVE	2	-
25	503215325	SCREW ITXSCM	6	-
26	582285901	AIR NOZZLE	1	-
27	526818101	SCREW ITXSCM	1	-
28	525824401	SCREW ITXSCM	1	-
29	501270802	GUIDE BUSHING	2	-
30	595897601	GASKET KIT	1	-
31	596911301	PROTECTIVE CAP *- up to s/n 20224908629*	1	-
1	596218502	CRANKSHAFT KIT	1	-
1	596218504	CRANKSHAFT KIT	1	-
2	501103101	NEEDLE BEARING	1	-
3	536789801	BALL BEARING	1	-
4	597576101	RADIAL SEAL *For SKF Ball bearing 5254342-XX*	1	-
4	536958201	RADIAL SEAL *For HQV Ball bearing 536789801*	1	-
1	591493401	CYLINDER COVER -	1	-
1	574519601	SPARK PLUG	1	-
2	590330508	CYLINDER KIT	1	-
3	525824907	SCREW ITXSCM	4	-
4	576717602	SLEEVE	4	-
5	591177401	GASKET	1	-
6	582702801	PISTON RING	1	-
7	582645602	PISTON ASSY	1	-
8	737441000	SNAP RING	2	-
9	501103101	NEEDLE BEARING	1	-
10	595897601	GASKET KIT	1	-
1	522620003	TANK CAP ASSY	1	-
2	589241101	GASKET	1	-
3	503578901	HOLDER	1	-
4	596550001	THROTTLE CABLE ASSY	1	-
5	596882002	ANTIVIBRATION ELEMENT	1	-
6	720182520	PARALLEL PIN	1	-
7	501007601	SUPPORT	1	-
8	590377401	ANTIVIBRATION ELEMENT	1	-
9	523085501	DEFLECTION LIMITER	1	-

Ref.	Article N.	Description	Qty	Kit
10	501152901	TANK VENT ASSY	1	-
11	529578202	FUEL HOSE ASSY *With magnet*	1	-
12	503443203	FUEL FILTER *18-40 µm (Blue)*	1	-
12	503443205	FUEL FILTER *18-40 µm (Blue) Mega pack (100 pcs)*	1	-
13	544099801	THROTTLE LOCKOUT	1	-
14	544099901	SPRING	1	-
15	505157701	THROTTLE	1	-
16	504106301	HANDLE INSERT	1	-
17	525887402	SCREW CITXPANT	1	-
18	596554002	FUEL TANK KIT	1	-
19	582794105	LABEL	1	-
1	582014901	HANDLE SYSTEM -	1	-
2	525798103	SCREW ITXSCFT -	2	-
3	525798101	SCREW ITXSCFT -	2	-
4	525755101	SCREW ITXSCFM -	1	-
5	595303401	ANTIVIBRATION ELEMENT -	1	-
6	503222401	LOCK NUT -	1	-
1	582777303	IGNITION MODULE ASSY -	1	-
2	596352901	CAP ASSY -	1	-
3	525755102	SCREW ITXSCFM -	2	-
4	503220401	NUT -	1	-
5	596230601	SCREW KIT -	1	-
6	522937805	FLYWHEEL ASSY -	1	-
1	583798701	MUFFLER KIT -	1	-
2	583799301	SPARK ARRESTER -	1	-

Ref.	Article N.	Description	Qty	Kit
3	501515402	SUPPORT -	1	-
4	724128759	SCREW CRPANM -	1	-
5	525825107	SCREW ITXSCM -	2	-
6	583799001	HEAT DEFLECTOR -	1	-
7	583798801	MUFFLER GASKET -	1	-
8	595897601	GASKET KIT -	1	-
9	582885501	SCREW -	2	-
1	531114506	SHORT BLOCK	1	-
1	582866901	COOLING AIR CONDUCTOR -	1	-
2	576356601	SCREW ITXSCT -	1	-
3	582650702	STARTER PULLEY -	1	-
4	505305125	STARTER ROPE -	1	-
5	525887401	SCREW CITXPANT -	2	-
6	505157902	SPRING CASSETTE ASSY -	1	-
7	596230301	STARTER ASSY -	1	-
8	525824501	SCREW CITXPANMO -	4	-
9	582503401	STARTER HOUSING -	1	-
10	537283201	SLEEVE -	1	-
11	537232501	STARTER HANDLE -	1	-
12	590613403	LABEL *545*	1	-
12	590613404	LABEL *545G*	1	-
1	582866901	COOLING AIR CONDUCTOR	1	-
2	576356601	SCREW ITXSCT	1	-

Ref.	Article N.	Description	Qty	Kit
4	503858902	STARTER ROPE	1	-
5	525887401	SCREW CITXPANT	2	-
6	505157902	SPRING CASSETTE ASSY	1	-
7	596230502	STARTER ASSY	1	-
8	525824501	SCREW CITXPANMO	4	-
9	582503401	STARTER HOUSING	1	-
10	537283201	SLEEVE	1	-
11	537232501	STARTER HANDLE	1	-
12	590613403	LABEL *545*	1	-
12	590613404	LABEL *545G*	1	-
13	582644902	TORSION SPRING	1	-
15	599289202	STARTER PULLEY	1	-
1	590260901	HANDLE INSERT	1	-
2	503220401	NUT	1	-
3	596230601	SCREW KIT	1	-
4	522937806	FLYWHEEL ASSY	1	-
5	526818102	SCREW ITXSCM	2	-
6	590260301	STATOR ASSY	1	-
7	588168603	FOIL ELEMENT	1	-
8	590688301	THERMOSTAT ASSY	1	-
9	582014902	HANDLE SYSTEM	1	-
10	503222401	LOCK NUT	1	-
11	590201901	CONTACT PLATE	1	-
12	537252501	CONTACT PLATE	1	-
13	595303401	ANTIVIBRATION ELEMENT	1	-
14	525755101	SCREW ITXSCFM	1	-
15	596201401	PROTECTION	1	-
16	590201801	COVER	1	-
17	578776102	SCREW ITXPANT	1	-
18	525798103	SCREW ITXSCFT	2	-
19	525798101	SCREW ITXSCFT	2	-
20	537088301	GROMMET	1	-
21	581143101	SCREW ITXSCFM	2	-
22	589550704	FILTER HOLDER ASSY *Blue*	1	-
23	525619001	SEALING	1	-
24	525619201	SEALING	1	-

Ref.	Article N.	Description	Qty	Kit
25	731231401	HEXAGON NUT	1	-
26	510017202	CHOKE CONTROL ASSY	1	-
27	505156201	SCREW	1	-

CYLINDER PISTON

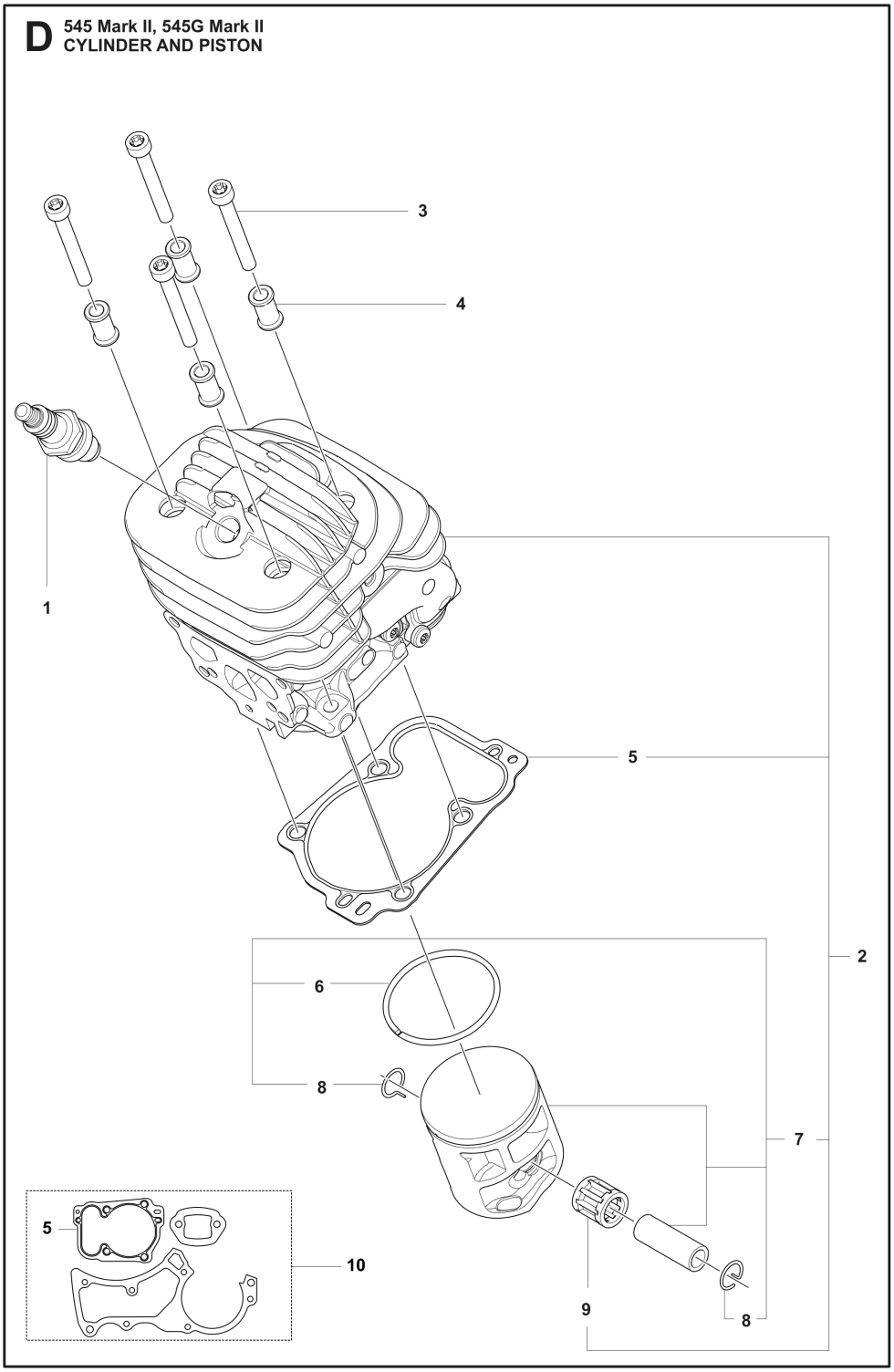

Ref.	Article N.	Description	Qty	Kit
1	503558511	TOOL -	1	-
2	522521101	COMBINATION WRENCH -	1	-
3	502215801	WRENCH -	1	-

Ref.	Article N.	Description	Qty	Kit
4	503558602	SPANNER -	1	-
5	575880701	WRENCH -	1	-
6	503621201	GREASE -	1	-
7	501911401	GREASE GUN -	1	-
8	583897101	DIAGNOSTIC TOOL KIT -	1	-
9	576183401	CABLE ASSY -	1	-
10	576952201	CABLE ASSY -	1	-
11	595967601	WINTER KIT -	1	-
12	740420100	O-RING -	2	-
13	503217016	SCREW CCRPANT -	1	-
14	594745301	BUMPER -	1	-
1	525824401	SCREW ITXSCM	1	-
2	526221801	SCREW CITXPANT	1	-
3	589584501	INSULATION WALL	1	-
4	593784901	INLET PIPE ASSY	1	-
5	503226503	SQUARE NUT	2	-
6	585195001	SUPPORT SLEEVE	1	-
7	589340601	RETAINER	1	-
8	547842601	CARBURETTOR KIT *AT-15C*	1	-
9	526818101	SCREW ITXSCM	4	-
10	536549601	SEALING *From s/n 20240911609 -*	1	-
11	540054901	PURGE *From s/n 20240911609 -*	1	-
12	505156201	SCREW	1	-
13	510017202	CHOKE CONTROL ASSY	1	-
14	523056801	FUEL HOSE	1	-
15	589340701	CONTACT CLAMP	1	-
16	577536402	WIRING ASSY	1	-

Ref.	Article N.	Description	Qty	Kit
17	590458801	AIR FILTER *Nylon Mesh - 64 Micron Rating - Black*	1	-
17	590458802	AIR FILTER *Nylon Mesh - 25 Micron Rating - Yellow*	1	-
17	590458803	AIR FILTER ASSY *Non-Woven - Clear*	1	-
18	525344303	FUEL HOSE	1	-
19	731231401	HEXAGON NUT	1	-
20	525619201	SEALING	1	-
21	581143101	SCREW ITXSCFM	2	-
22	589550703	FILTER HOLDER ASSY *Black*	1	-
23	525619001	SEALING	1	-
24	547549201	PURGE *- up to s/n 20240911608, Sealing and purge*	1	-
1	547842601	CARBURETTOR KIT *AT-15C*	1	-
2	582366201	REPAIR KIT	1	-
3	582366401	GASKET KIT	1	-
4	596969201	GASKET KIT	1	-
1	591083601	HAND GUARD	1	-
2	596218201	SCREW KIT	1	-
3	503751801	PIN	1	-
4	596218101	KNEE JOINT ASSY	1	-
5	505199502	BRAKE BAND ASSY	1	-
6	501846104	CLUTCH COVER ASSY	1	-
7	505201601	GUARD	1	-
8	505199703	COVER	1	-
9	526221801	SCREW CITXPANT	5	-
10	592975201	CHAIN GUIDE	1	-
11	505199801	CHAIN GUIDE	1	-
12	575260404	CHAIN TENSIONER KIT	1	-
13	740480702	O-RING	1	-
14	503230063	WASHER	1	-
15	537017401	BEARING SLEEVE	1	-
16	505197301	NUT	2	-
1	577518202	CLUTCH ASSY	1	-
2	597645401	CLUTCH SPRING	2	-
3	596218303	CLUTCH DRUM ASSY	1	-
4	501457402	RIM SPROCKET	1	-

Ref.	Article N.	Description	Qty	Kit
5	599531501	NEEDLE BEARING	1	-
6	582814001	WORM WHEEL	1	-
7	505199911	OIL PUMP ASSY	1	-
8	503624901	SEALING PLUG	1	-
9	505200204	PUMP PISTON	1	-
10	503230060	WASHER	2	-
11	503891601	SPRING	1	-
12	720123300	PARALLEL PIN	2	-
13	505200101	PUMP CYLINDER	1	-
14	505200402	OIL HOSE	1	-
15	504710003	OIL PLUMMET	1	-
16	526818101	SCREW ITXSCM	2	-
17	505157001	ADJUSTMENT SCREW	1	-
18	721116430	GROOVED PIN	1	-
19	503891501	SPRING	1	-
20	505200301	CASING	1	-
1	575885703	SCREW ITXSCFM	3	-
2	503869301	SUPPORT	2	-
3	544331601	GUIDE PIN	1	-
4	582285201	CARBURETTOR AREA BASE	1	-
5	522620003	TANK CAP ASSY	1	-
6	503578901	HOLDER	1	-
7	589241101	GASKET	1	-
8	595303003	SNAP LOCKING	1	-
9	595897705	CRANKCASE KIT	1	-
10	503751801	PIN	1	-
11	596351401	CATCH	1	-
12	596351301	SPIKE	1	-
13	575793501	SCREW ITXPANM	2	-
14	581559201	BELLOWS	1	-
15	525887401	SCREW CITXPANT	1	-
16	525798103	SCREW ITXSCFT	1	-
17	537377902	CHAIN CATCHER	1	-
18	589721901	CHAIN GUIDE PLATE	1	-
19	537403501	FILTER	1	-
20	530026119	CHECK VALVE	1	-
21	505125801	DEFLECTION LIMITER	1	-
22	505217301	BAR BOLT	2	-

Ref.	Article N.	Description	Qty	Kit
23	720126952	PARALLEL PIN	2	-
24	589331301	SLEEVE	2	-
25	503215325	SCREW ITXSCM	6	-
26	582285901	AIR NOZZLE	1	-
27	526818101	SCREW ITXSCM	1	-
28	525824401	SCREW ITXSCM	1	-
29	501270802	GUIDE BUSHING	2	-
30	595897601	GASKET KIT	1	-
31	596911301	PROTECTIVE CAP *- up to s/n 20224908629*	1	-
1	596218502	CRANKSHAFT KIT	1	-
1	596218504	CRANKSHAFT KIT	1	-
2	501103101	NEEDLE BEARING	1	-
3	536789801	BALL BEARING	1	-
4	597576101	RADIAL SEAL *For SKF Ball bearing 5254342-XX*	1	-
4	536958201	RADIAL SEAL *For HQV Ball bearing 536789801*	1	-
1	591493401	CYLINDER COVER -	1	-
1	574519601	SPARK PLUG	1	-
2	590330508	CYLINDER KIT	1	-
3	525824907	SCREW ITXSCM	4	-
4	576717602	SLEEVE	4	-
5	591177401	GASKET	1	-
6	582702801	PISTON RING	1	-
7	582645602	PISTON ASSY	1	-
8	737441000	SNAP RING	2	-
9	501103101	NEEDLE BEARING	1	-
10	595897601	GASKET KIT	1	-
1	522620003	TANK CAP ASSY	1	-
2	589241101	GASKET	1	-
3	503578901	HOLDER	1	-
4	596550001	THROTTLE CABLE ASSY	1	-
5	596882002	ANTIVIBRATION ELEMENT	1	-
6	720182520	PARALLEL PIN	1	-
7	501007601	SUPPORT	1	-
8	590377401	ANTIVIBRATION ELEMENT	1	-
9	523085501	DEFLECTION LIMITER	1	-

Ref.	Article N.	Description	Qty	Kit
10	501152901	TANK VENT ASSY	1	-
11	529578202	FUEL HOSE ASSY *With magnet*	1	-
12	503443203	FUEL FILTER *18-40 µm (Blue)*	1	-
12	503443205	FUEL FILTER *18-40 µm (Blue) Mega pack (100 pcs)*	1	-
13	544099801	THROTTLE LOCKOUT	1	-
14	544099901	SPRING	1	-
15	505157701	THROTTLE	1	-
16	504106301	HANDLE INSERT	1	-
17	525887402	SCREW CITXPANT	1	-
18	596554002	FUEL TANK KIT	1	-
19	582794105	LABEL	1	-
1	582014901	HANDLE SYSTEM -	1	-
2	525798103	SCREW ITXSCFT -	2	-
3	525798101	SCREW ITXSCFT -	2	-
4	525755101	SCREW ITXSCFM -	1	-
5	595303401	ANTIVIBRATION ELEMENT -	1	-
6	503222401	LOCK NUT -	1	-
1	582777303	IGNITION MODULE ASSY -	1	-
2	596352901	CAP ASSY -	1	-
3	525755102	SCREW ITXSCFM -	2	-
4	503220401	NUT -	1	-
5	596230601	SCREW KIT -	1	-
6	522937805	FLYWHEEL ASSY -	1	-
1	583798701	MUFFLER KIT -	1	-
2	583799301	SPARK ARRESTER -	1	-

Ref.	Article N.	Description	Qty	Kit
3	501515402	SUPPORT -	1	-
4	724128759	SCREW CRPANM -	1	-
5	525825107	SCREW ITXSCM -	2	-
6	583799001	HEAT DEFLECTOR -	1	-
7	583798801	MUFFLER GASKET -	1	-
8	595897601	GASKET KIT -	1	-
9	582885501	SCREW -	2	-
1	531114506	SHORT BLOCK	1	-
1	582866901	COOLING AIR CONDUCTOR -	1	-
2	576356601	SCREW ITXSCT -	1	-
3	582650702	STARTER PULLEY -	1	-
4	505305125	STARTER ROPE -	1	-
5	525887401	SCREW CITXPANT -	2	-
6	505157902	SPRING CASSETTE ASSY -	1	-
7	596230301	STARTER ASSY -	1	-
8	525824501	SCREW CITXPANMO -	4	-
9	582503401	STARTER HOUSING -	1	-
10	537283201	SLEEVE -	1	-
11	537232501	STARTER HANDLE -	1	-
12	590613403	LABEL *545*	1	-
12	590613404	LABEL *545G*	1	-
1	582866901	COOLING AIR CONDUCTOR	1	-
2	576356601	SCREW ITXSCT	1	-

Ref.	Article N.	Description	Qty	Kit
4	503858902	STARTER ROPE	1	-
5	525887401	SCREW CITXPANT	2	-
6	505157902	SPRING CASSETTE ASSY	1	-
7	596230502	STARTER ASSY	1	-
8	525824501	SCREW CITXPANMO	4	-
9	582503401	STARTER HOUSING	1	-
10	537283201	SLEEVE	1	-
11	537232501	STARTER HANDLE	1	-
12	590613403	LABEL *545*	1	-
12	590613404	LABEL *545G*	1	-
13	582644902	TORSION SPRING	1	-
15	599289202	STARTER PULLEY	1	-
1	590260901	HANDLE INSERT	1	-
2	503220401	NUT	1	-
3	596230601	SCREW KIT	1	-
4	522937806	FLYWHEEL ASSY	1	-
5	526818102	SCREW ITXSCM	2	-
6	590260301	STATOR ASSY	1	-
7	588168603	FOIL ELEMENT	1	-
8	590688301	THERMOSTAT ASSY	1	-
9	582014902	HANDLE SYSTEM	1	-
10	503222401	LOCK NUT	1	-
11	590201901	CONTACT PLATE	1	-
12	537252501	CONTACT PLATE	1	-
13	595303401	ANTIVIBRATION ELEMENT	1	-
14	525755101	SCREW ITXSCFM	1	-
15	596201401	PROTECTION	1	-
16	590201801	COVER	1	-
17	578776102	SCREW ITXPANT	1	-
18	525798103	SCREW ITXSCFT	2	-
19	525798101	SCREW ITXSCFT	2	-
20	537088301	GROMMET	1	-
21	581143101	SCREW ITXSCFM	2	-
22	589550704	FILTER HOLDER ASSY *Blue*	1	-
23	525619001	SEALING	1	-
24	525619201	SEALING	1	-

Ref.	Article N.	Description	Qty	Kit
25	731231401	HEXAGON NUT	1	-
26	510017202	CHOKE CONTROL ASSY	1	-
27	505156201	SCREW	1	-

FUEL TANK

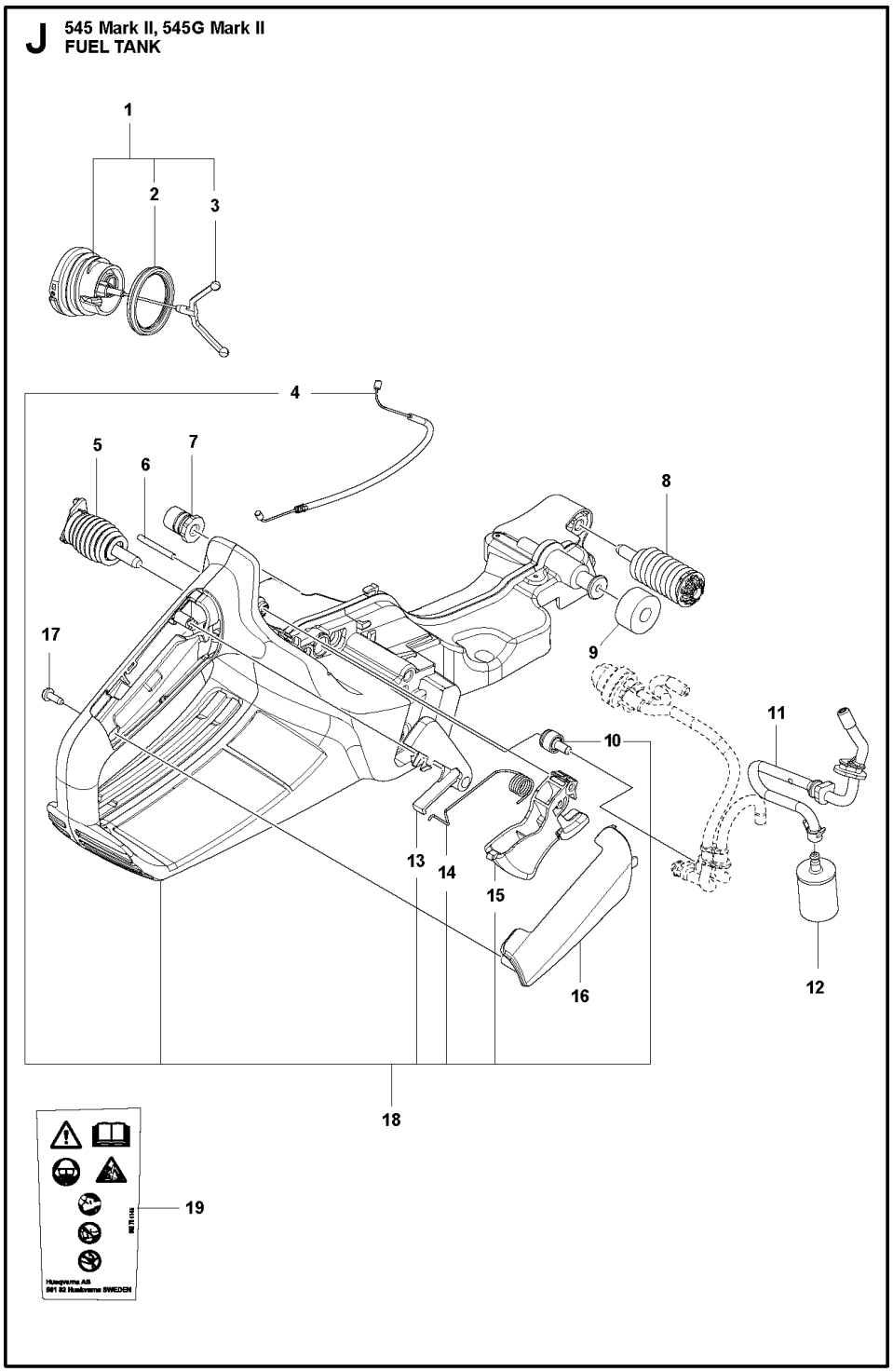

Ref.	Article N.	Description	Qty	Kit
1	503558511	TOOL -	1	-
2	522521101	COMBINATION WRENCH -	1	-
3	502215801	WRENCH -	1	-

Ref.	Article N.	Description	Qty	Kit
4	503558602	SPANNER -	1	-
5	575880701	WRENCH -	1	-
6	503621201	GREASE -	1	-
7	501911401	GREASE GUN -	1	-
8	583897101	DIAGNOSTIC TOOL KIT -	1	-
9	576183401	CABLE ASSY -	1	-
10	576952201	CABLE ASSY -	1	-
11	595967601	WINTER KIT -	1	-
12	740420100	O-RING -	2	-
13	503217016	SCREW CCRPANT -	1	-
14	594745301	BUMPER -	1	-
1	525824401	SCREW ITXSCM	1	-
2	526221801	SCREW CITXPANT	1	-
3	589584501	INSULATION WALL	1	-
4	593784901	INLET PIPE ASSY	1	-
5	503226503	SQUARE NUT	2	-
6	585195001	SUPPORT SLEEVE	1	-
7	589340601	RETAINER	1	-
8	547842601	CARBURETTOR KIT *AT-15C*	1	-
9	526818101	SCREW ITXSCM	4	-
10	536549601	SEALING *From s/n 20240911609 -*	1	-
11	540054901	PURGE *From s/n 20240911609 -*	1	-
12	505156201	SCREW	1	-
13	510017202	CHOKE CONTROL ASSY	1	-
14	523056801	FUEL HOSE	1	-
15	589340701	CONTACT CLAMP	1	-
16	577536402	WIRING ASSY	1	-

Ref.	Article N.	Description	Qty	Kit
17	590458801	AIR FILTER *Nylon Mesh - 64 Micron Rating - Black*	1	-
17	590458802	AIR FILTER *Nylon Mesh - 25 Micron Rating - Yellow*	1	-
17	590458803	AIR FILTER ASSY *Non-Woven - Clear*	1	-
18	525344303	FUEL HOSE	1	-
19	731231401	HEXAGON NUT	1	-
20	525619201	SEALING	1	-
21	581143101	SCREW ITXSCFM	2	-
22	589550703	FILTER HOLDER ASSY *Black*	1	-
23	525619001	SEALING	1	-
24	547549201	PURGE *- up to s/n 20240911608, Sealing and purge*	1	-
1	547842601	CARBURETTOR KIT *AT-15C*	1	-
2	582366201	REPAIR KIT	1	-
3	582366401	GASKET KIT	1	-
4	596969201	GASKET KIT	1	-
1	591083601	HAND GUARD	1	-
2	596218201	SCREW KIT	1	-
3	503751801	PIN	1	-
4	596218101	KNEE JOINT ASSY	1	-
5	505199502	BRAKE BAND ASSY	1	-
6	501846104	CLUTCH COVER ASSY	1	-
7	505201601	GUARD	1	-
8	505199703	COVER	1	-
9	526221801	SCREW CITXPANT	5	-
10	592975201	CHAIN GUIDE	1	-
11	505199801	CHAIN GUIDE	1	-
12	575260404	CHAIN TENSIONER KIT	1	-
13	740480702	O-RING	1	-
14	503230063	WASHER	1	-
15	537017401	BEARING SLEEVE	1	-
16	505197301	NUT	2	-
1	577518202	CLUTCH ASSY	1	-
2	597645401	CLUTCH SPRING	2	-
3	596218303	CLUTCH DRUM ASSY	1	-
4	501457402	RIM SPROCKET	1	-

Ref.	Article N.	Description	Qty	Kit
5	599531501	NEEDLE BEARING	1	-
6	582814001	WORM WHEEL	1	-
7	505199911	OIL PUMP ASSY	1	-
8	503624901	SEALING PLUG	1	-
9	505200204	PUMP PISTON	1	-
10	503230060	WASHER	2	-
11	503891601	SPRING	1	-
12	720123300	PARALLEL PIN	2	-
13	505200101	PUMP CYLINDER	1	-
14	505200402	OIL HOSE	1	-
15	504710003	OIL PLUMMET	1	-
16	526818101	SCREW ITXSCM	2	-
17	505157001	ADJUSTMENT SCREW	1	-
18	721116430	GROOVED PIN	1	-
19	503891501	SPRING	1	-
20	505200301	CASING	1	-
1	575885703	SCREW ITXSCFM	3	-
2	503869301	SUPPORT	2	-
3	544331601	GUIDE PIN	1	-
4	582285201	CARBURETTOR AREA BASE	1	-
5	522620003	TANK CAP ASSY	1	-
6	503578901	HOLDER	1	-
7	589241101	GASKET	1	-
8	595303003	SNAP LOCKING	1	-
9	595897705	CRANKCASE KIT	1	-
10	503751801	PIN	1	-
11	596351401	CATCH	1	-
12	596351301	SPIKE	1	-
13	575793501	SCREW ITXPANM	2	-
14	581559201	BELLOWS	1	-
15	525887401	SCREW CITXPANT	1	-
16	525798103	SCREW ITXSCFT	1	-
17	537377902	CHAIN CATCHER	1	-
18	589721901	CHAIN GUIDE PLATE	1	-
19	537403501	FILTER	1	-
20	530026119	CHECK VALVE	1	-
21	505125801	DEFLECTION LIMITER	1	-
22	505217301	BAR BOLT	2	-

Ref.	Article N.	Description	Qty	Kit
23	720126952	PARALLEL PIN	2	-
24	589331301	SLEEVE	2	-
25	503215325	SCREW ITXSCM	6	-
26	582285901	AIR NOZZLE	1	-
27	526818101	SCREW ITXSCM	1	-
28	525824401	SCREW ITXSCM	1	-
29	501270802	GUIDE BUSHING	2	-
30	595897601	GASKET KIT	1	-
31	596911301	PROTECTIVE CAP *- up to s/n 20224908629*	1	-
1	596218502	CRANKSHAFT KIT	1	-
1	596218504	CRANKSHAFT KIT	1	-
2	501103101	NEEDLE BEARING	1	-
3	536789801	BALL BEARING	1	-
4	597576101	RADIAL SEAL *For SKF Ball bearing 5254342-XX*	1	-
4	536958201	RADIAL SEAL *For HQV Ball bearing 536789801*	1	-
1	591493401	CYLINDER COVER -	1	-
1	574519601	SPARK PLUG	1	-
2	590330508	CYLINDER KIT	1	-
3	525824907	SCREW ITXSCM	4	-
4	576717602	SLEEVE	4	-
5	591177401	GASKET	1	-
6	582702801	PISTON RING	1	-
7	582645602	PISTON ASSY	1	-
8	737441000	SNAP RING	2	-
9	501103101	NEEDLE BEARING	1	-
10	595897601	GASKET KIT	1	-
1	522620003	TANK CAP ASSY	1	-
2	589241101	GASKET	1	-
3	503578901	HOLDER	1	-
4	596550001	THROTTLE CABLE ASSY	1	-
5	596882002	ANTIVIBRATION ELEMENT	1	-
6	720182520	PARALLEL PIN	1	-
7	501007601	SUPPORT	1	-
8	590377401	ANTIVIBRATION ELEMENT	1	-
9	523085501	DEFLECTION LIMITER	1	-

Ref.	Article N.	Description	Qty	Kit
10	501152901	TANK VENT ASSY	1	-
11	529578202	FUEL HOSE ASSY *With magnet*	1	-
12	503443203	FUEL FILTER *18-40 µm (Blue)*	1	-
12	503443205	FUEL FILTER *18-40 µm (Blue) Mega pack (100 pcs)*	1	-
13	544099801	THROTTLE LOCKOUT	1	-
14	544099901	SPRING	1	-
15	505157701	THROTTLE	1	-
16	504106301	HANDLE INSERT	1	-
17	525887402	SCREW CITXPANT	1	-
18	596554002	FUEL TANK KIT	1	-
19	582794105	LABEL	1	-
1	582014901	HANDLE SYSTEM -	1	-
2	525798103	SCREW ITXSCFT -	2	-
3	525798101	SCREW ITXSCFT -	2	-
4	525755101	SCREW ITXSCFM -	1	-
5	595303401	ANTIVIBRATION ELEMENT -	1	-
6	503222401	LOCK NUT -	1	-
1	582777303	IGNITION MODULE ASSY -	1	-
2	596352901	CAP ASSY -	1	-
3	525755102	SCREW ITXSCFM -	2	-
4	503220401	NUT -	1	-
5	596230601	SCREW KIT -	1	-
6	522937805	FLYWHEEL ASSY -	1	-
1	583798701	MUFFLER KIT -	1	-
2	583799301	SPARK ARRESTER -	1	-

Ref.	Article N.	Description	Qty	Kit
3	501515402	SUPPORT -	1	-
4	724128759	SCREW CRPANM -	1	-
5	525825107	SCREW ITXSCM -	2	-
6	583799001	HEAT DEFLECTOR -	1	-
7	583798801	MUFFLER GASKET -	1	-
8	595897601	GASKET KIT -	1	-
9	582885501	SCREW -	2	-
1	531114506	SHORT BLOCK	1	-
1	582866901	COOLING AIR CONDUCTOR -	1	-
2	576356601	SCREW ITXSCT -	1	-
3	582650702	STARTER PULLEY -	1	-
4	505305125	STARTER ROPE -	1	-
5	525887401	SCREW CITXPANT -	2	-
6	505157902	SPRING CASSETTE ASSY -	1	-
7	596230301	STARTER ASSY -	1	-
8	525824501	SCREW CITXPANMO -	4	-
9	582503401	STARTER HOUSING -	1	-
10	537283201	SLEEVE -	1	-
11	537232501	STARTER HANDLE -	1	-
12	590613403	LABEL *545*	1	-
12	590613404	LABEL *545G*	1	-
1	582866901	COOLING AIR CONDUCTOR	1	-
2	576356601	SCREW ITXSCT	1	-

Ref.	Article N.	Description	Qty	Kit
4	503858902	STARTER ROPE	1	-
5	525887401	SCREW CITXPANT	2	-
6	505157902	SPRING CASSETTE ASSY	1	-
7	596230502	STARTER ASSY	1	-
8	525824501	SCREW CITXPANMO	4	-
9	582503401	STARTER HOUSING	1	-
10	537283201	SLEEVE	1	-
11	537232501	STARTER HANDLE	1	-
12	590613403	LABEL *545*	1	-
12	590613404	LABEL *545G*	1	-
13	582644902	TORSION SPRING	1	-
15	599289202	STARTER PULLEY	1	-
1	590260901	HANDLE INSERT	1	-
2	503220401	NUT	1	-
3	596230601	SCREW KIT	1	-
4	522937806	FLYWHEEL ASSY	1	-
5	526818102	SCREW ITXSCM	2	-
6	590260301	STATOR ASSY	1	-
7	588168603	FOIL ELEMENT	1	-
8	590688301	THERMOSTAT ASSY	1	-
9	582014902	HANDLE SYSTEM	1	-
10	503222401	LOCK NUT	1	-
11	590201901	CONTACT PLATE	1	-
12	537252501	CONTACT PLATE	1	-
13	595303401	ANTIVIBRATION ELEMENT	1	-
14	525755101	SCREW ITXSCFM	1	-
15	596201401	PROTECTION	1	-
16	590201801	COVER	1	-
17	578776102	SCREW ITXPANT	1	-
18	525798103	SCREW ITXSCFT	2	-
19	525798101	SCREW ITXSCFT	2	-
20	537088301	GROMMET	1	-
21	581143101	SCREW ITXSCFM	2	-
22	589550704	FILTER HOLDER ASSY *Blue*	1	-
23	525619001	SEALING	1	-
24	525619201	SEALING	1	-

Ref.	Article N.	Description	Qty	Kit
25	731231401	HEXAGON NUT	1	-
26	510017202	CHOKE CONTROL ASSY	1	-
27	505156201	SCREW	1	-

HANDLE

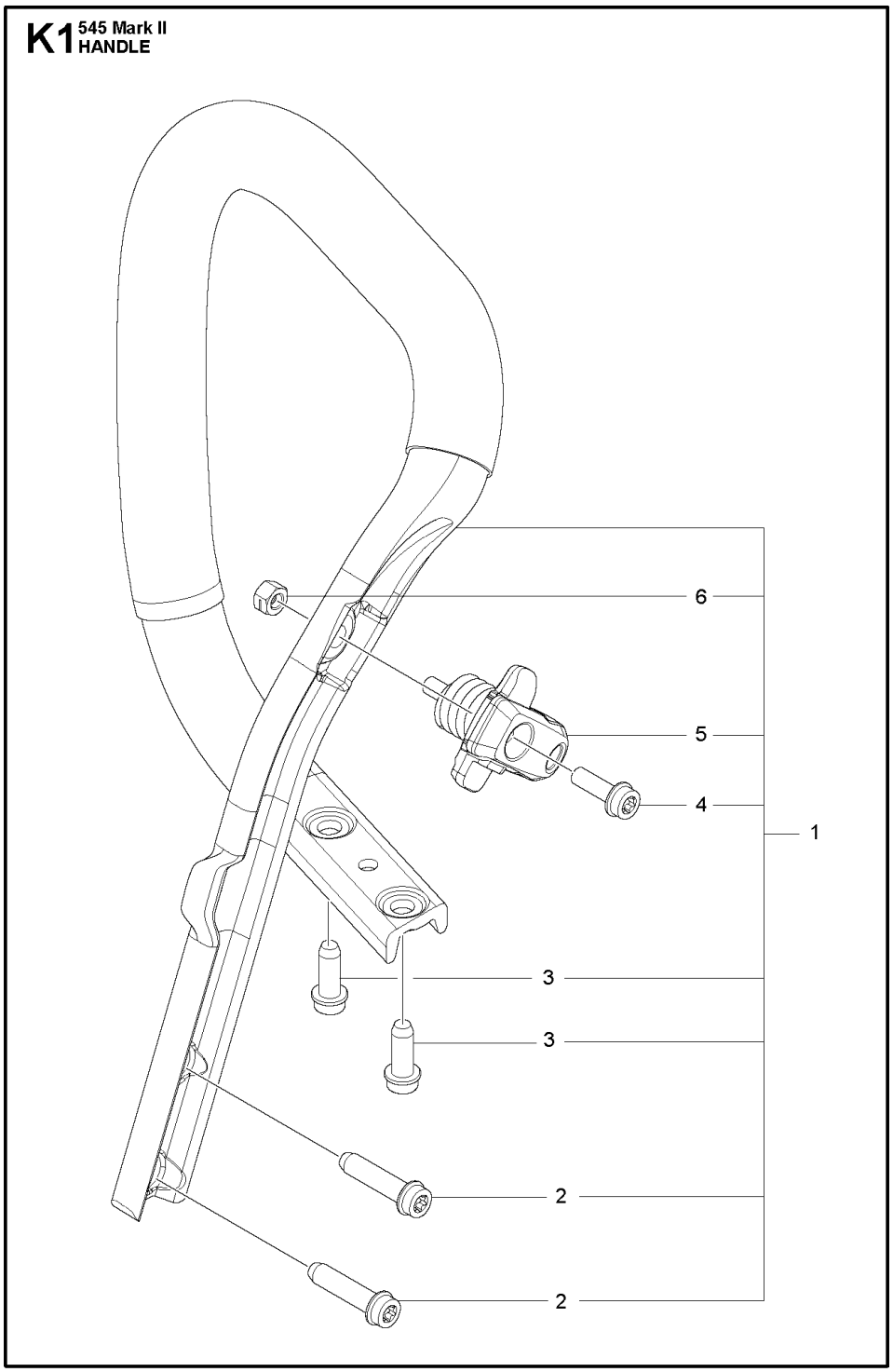

Ref.	Article N.	Description	Qty	Kit
1	503558511	TOOL -	1	-
2	522521101	COMBINATION WRENCH -	1	-
3	502215801	WRENCH -	1	-

Ref.	Article N.	Description	Qty	Kit
4	503558602	SPANNER -	1	-
5	575880701	WRENCH -	1	-
6	503621201	GREASE -	1	-
7	501911401	GREASE GUN -	1	-
8	583897101	DIAGNOSTIC TOOL KIT -	1	-
9	576183401	CABLE ASSY -	1	-
10	576952201	CABLE ASSY -	1	-
11	595967601	WINTER KIT -	1	-
12	740420100	O-RING -	2	-
13	503217016	SCREW CCRPANT -	1	-
14	594745301	BUMPER -	1	-
1	525824401	SCREW ITXSCM	1	-
2	526221801	SCREW CITXPANT	1	-
3	589584501	INSULATION WALL	1	-
4	593784901	INLET PIPE ASSY	1	-
5	503226503	SQUARE NUT	2	-
6	585195001	SUPPORT SLEEVE	1	-
7	589340601	RETAINER	1	-
8	547842601	CARBURETTOR KIT *AT-15C*	1	-
9	526818101	SCREW ITXSCM	4	-
10	536549601	SEALING *From s/n 20240911609 -*	1	-
11	540054901	PURGE *From s/n 20240911609 -*	1	-
12	505156201	SCREW	1	-
13	510017202	CHOKE CONTROL ASSY	1	-
14	523056801	FUEL HOSE	1	-
15	589340701	CONTACT CLAMP	1	-
16	577536402	WIRING ASSY	1	-

Ref.	Article N.	Description	Qty	Kit
17	590458801	AIR FILTER *Nylon Mesh - 64 Micron Rating - Black*	1	-
17	590458802	AIR FILTER *Nylon Mesh - 25 Micron Rating - Yellow*	1	-
17	590458803	AIR FILTER ASSY *Non-Woven - Clear*	1	-
18	525344303	FUEL HOSE	1	-
19	731231401	HEXAGON NUT	1	-
20	525619201	SEALING	1	-
21	581143101	SCREW ITXSCFM	2	-
22	589550703	FILTER HOLDER ASSY *Black*	1	-
23	525619001	SEALING	1	-
24	547549201	PURGE *- up to s/n 20240911608, Sealing and purge*	1	-
1	547842601	CARBURETTOR KIT *AT-15C*	1	-
2	582366201	REPAIR KIT	1	-
3	582366401	GASKET KIT	1	-
4	596969201	GASKET KIT	1	-
1	591083601	HAND GUARD	1	-
2	596218201	SCREW KIT	1	-
3	503751801	PIN	1	-
4	596218101	KNEE JOINT ASSY	1	-
5	505199502	BRAKE BAND ASSY	1	-
6	501846104	CLUTCH COVER ASSY	1	-
7	505201601	GUARD	1	-
8	505199703	COVER	1	-
9	526221801	SCREW CITXPANT	5	-
10	592975201	CHAIN GUIDE	1	-
11	505199801	CHAIN GUIDE	1	-
12	575260404	CHAIN TENSIONER KIT	1	-
13	740480702	O-RING	1	-
14	503230063	WASHER	1	-
15	537017401	BEARING SLEEVE	1	-
16	505197301	NUT	2	-
1	577518202	CLUTCH ASSY	1	-
2	597645401	CLUTCH SPRING	2	-
3	596218303	CLUTCH DRUM ASSY	1	-
4	501457402	RIM SPROCKET	1	-

Ref.	Article N.	Description	Qty	Kit
5	599531501	NEEDLE BEARING	1	-
6	582814001	WORM WHEEL	1	-
7	505199911	OIL PUMP ASSY	1	-
8	503624901	SEALING PLUG	1	-
9	505200204	PUMP PISTON	1	-
10	503230060	WASHER	2	-
11	503891601	SPRING	1	-
12	720123300	PARALLEL PIN	2	-
13	505200101	PUMP CYLINDER	1	-
14	505200402	OIL HOSE	1	-
15	504710003	OIL PLUMMET	1	-
16	526818101	SCREW ITXSCM	2	-
17	505157001	ADJUSTMENT SCREW	1	-
18	721116430	GROOVED PIN	1	-
19	503891501	SPRING	1	-
20	505200301	CASING	1	-
1	575885703	SCREW ITXSCFM	3	-
2	503869301	SUPPORT	2	-
3	544331601	GUIDE PIN	1	-
4	582285201	CARBURETTOR AREA BASE	1	-
5	522620003	TANK CAP ASSY	1	-
6	503578901	HOLDER	1	-
7	589241101	GASKET	1	-
8	595303003	SNAP LOCKING	1	-
9	595897705	CRANKCASE KIT	1	-
10	503751801	PIN	1	-
11	596351401	CATCH	1	-
12	596351301	SPIKE	1	-
13	575793501	SCREW ITXPANM	2	-
14	581559201	BELLOWS	1	-
15	525887401	SCREW CITXPANT	1	-
16	525798103	SCREW ITXSCFT	1	-
17	537377902	CHAIN CATCHER	1	-
18	589721901	CHAIN GUIDE PLATE	1	-
19	537403501	FILTER	1	-
20	530026119	CHECK VALVE	1	-
21	505125801	DEFLECTION LIMITER	1	-
22	505217301	BAR BOLT	2	-

Ref.	Article N.	Description	Qty	Kit
23	720126952	PARALLEL PIN	2	-
24	589331301	SLEEVE	2	-
25	503215325	SCREW ITXSCM	6	-
26	582285901	AIR NOZZLE	1	-
27	526818101	SCREW ITXSCM	1	-
28	525824401	SCREW ITXSCM	1	-
29	501270802	GUIDE BUSHING	2	-
30	595897601	GASKET KIT	1	-
31	596911301	PROTECTIVE CAP *- up to s/n 20224908629*	1	-
1	596218502	CRANKSHAFT KIT	1	-
1	596218504	CRANKSHAFT KIT	1	-
2	501103101	NEEDLE BEARING	1	-
3	536789801	BALL BEARING	1	-
4	597576101	RADIAL SEAL *For SKF Ball bearing 5254342-XX*	1	-
4	536958201	RADIAL SEAL *For HQV Ball bearing 536789801*	1	-
1	591493401	CYLINDER COVER -	1	-
1	574519601	SPARK PLUG	1	-
2	590330508	CYLINDER KIT	1	-
3	525824907	SCREW ITXSCM	4	-
4	576717602	SLEEVE	4	-
5	591177401	GASKET	1	-
6	582702801	PISTON RING	1	-
7	582645602	PISTON ASSY	1	-
8	737441000	SNAP RING	2	-
9	501103101	NEEDLE BEARING	1	-
10	595897601	GASKET KIT	1	-
1	522620003	TANK CAP ASSY	1	-
2	589241101	GASKET	1	-
3	503578901	HOLDER	1	-
4	596550001	THROTTLE CABLE ASSY	1	-
5	596882002	ANTIVIBRATION ELEMENT	1	-
6	720182520	PARALLEL PIN	1	-
7	501007601	SUPPORT	1	-
8	590377401	ANTIVIBRATION ELEMENT	1	-
9	523085501	DEFLECTION LIMITER	1	-

Ref.	Article N.	Description	Qty	Kit
10	501152901	TANK VENT ASSY	1	-
11	529578202	FUEL HOSE ASSY *With magnet*	1	-
12	503443203	FUEL FILTER *18-40 µm (Blue)*	1	-
12	503443205	FUEL FILTER *18-40 µm (Blue) Mega pack (100 pcs)*	1	-
13	544099801	THROTTLE LOCKOUT	1	-
14	544099901	SPRING	1	-
15	505157701	THROTTLE	1	-
16	504106301	HANDLE INSERT	1	-
17	525887402	SCREW CITXPANT	1	-
18	596554002	FUEL TANK KIT	1	-
19	582794105	LABEL	1	-
1	582014901	HANDLE SYSTEM -	1	-
2	525798103	SCREW ITXSCFT -	2	-
3	525798101	SCREW ITXSCFT -	2	-
4	525755101	SCREW ITXSCFM -	1	-
5	595303401	ANTIVIBRATION ELEMENT -	1	-
6	503222401	LOCK NUT -	1	-
1	582777303	IGNITION MODULE ASSY -	1	-
2	596352901	CAP ASSY -	1	-
3	525755102	SCREW ITXSCFM -	2	-
4	503220401	NUT -	1	-
5	596230601	SCREW KIT -	1	-
6	522937805	FLYWHEEL ASSY -	1	-
1	583798701	MUFFLER KIT -	1	-
2	583799301	SPARK ARRESTER -	1	-

Ref.	Article N.	Description	Qty	Kit
3	501515402	SUPPORT -	1	-
4	724128759	SCREW CRPANM -	1	-
5	525825107	SCREW ITXSCM -	2	-
6	583799001	HEAT DEFLECTOR -	1	-
7	583798801	MUFFLER GASKET -	1	-
8	595897601	GASKET KIT -	1	-
9	582885501	SCREW -	2	-
1	531114506	SHORT BLOCK	1	-
1	582866901	COOLING AIR CONDUCTOR -	1	-
2	576356601	SCREW ITXSCT -	1	-
3	582650702	STARTER PULLEY -	1	-
4	505305125	STARTER ROPE -	1	-
5	525887401	SCREW CITXPANT -	2	-
6	505157902	SPRING CASSETTE ASSY -	1	-
7	596230301	STARTER ASSY -	1	-
8	525824501	SCREW CITXPANMO -	4	-
9	582503401	STARTER HOUSING -	1	-
10	537283201	SLEEVE -	1	-
11	537232501	STARTER HANDLE -	1	-
12	590613403	LABEL *545*	1	-
12	590613404	LABEL *545G*	1	-
1	582866901	COOLING AIR CONDUCTOR	1	-
2	576356601	SCREW ITXSCT	1	-

Ref.	Article N.	Description	Qty	Kit
4	503858902	STARTER ROPE	1	-
5	525887401	SCREW CITXPANT	2	-
6	505157902	SPRING CASSETTE ASSY	1	-
7	596230502	STARTER ASSY	1	-
8	525824501	SCREW CITXPANMO	4	-
9	582503401	STARTER HOUSING	1	-
10	537283201	SLEEVE	1	-
11	537232501	STARTER HANDLE	1	-
12	590613403	LABEL *545*	1	-
12	590613404	LABEL *545G*	1	-
13	582644902	TORSION SPRING	1	-
15	599289202	STARTER PULLEY	1	-
1	590260901	HANDLE INSERT	1	-
2	503220401	NUT	1	-
3	596230601	SCREW KIT	1	-
4	522937806	FLYWHEEL ASSY	1	-
5	526818102	SCREW ITXSCM	2	-
6	590260301	STATOR ASSY	1	-
7	588168603	FOIL ELEMENT	1	-
8	590688301	THERMOSTAT ASSY	1	-
9	582014902	HANDLE SYSTEM	1	-
10	503222401	LOCK NUT	1	-
11	590201901	CONTACT PLATE	1	-
12	537252501	CONTACT PLATE	1	-
13	595303401	ANTIVIBRATION ELEMENT	1	-
14	525755101	SCREW ITXSCFM	1	-
15	596201401	PROTECTION	1	-
16	590201801	COVER	1	-
17	578776102	SCREW ITXPANT	1	-
18	525798103	SCREW ITXSCFT	2	-
19	525798101	SCREW ITXSCFT	2	-
20	537088301	GROMMET	1	-
21	581143101	SCREW ITXSCFM	2	-
22	589550704	FILTER HOLDER ASSY *Blue*	1	-
23	525619001	SEALING	1	-
24	525619201	SEALING	1	-

Ref.	Article N.	Description	Qty	Kit
25	731231401	HEXAGON NUT	1	-
26	510017202	CHOKE CONTROL ASSY	1	-
27	505156201	SCREW	1	-

IGNITION SYSTEM

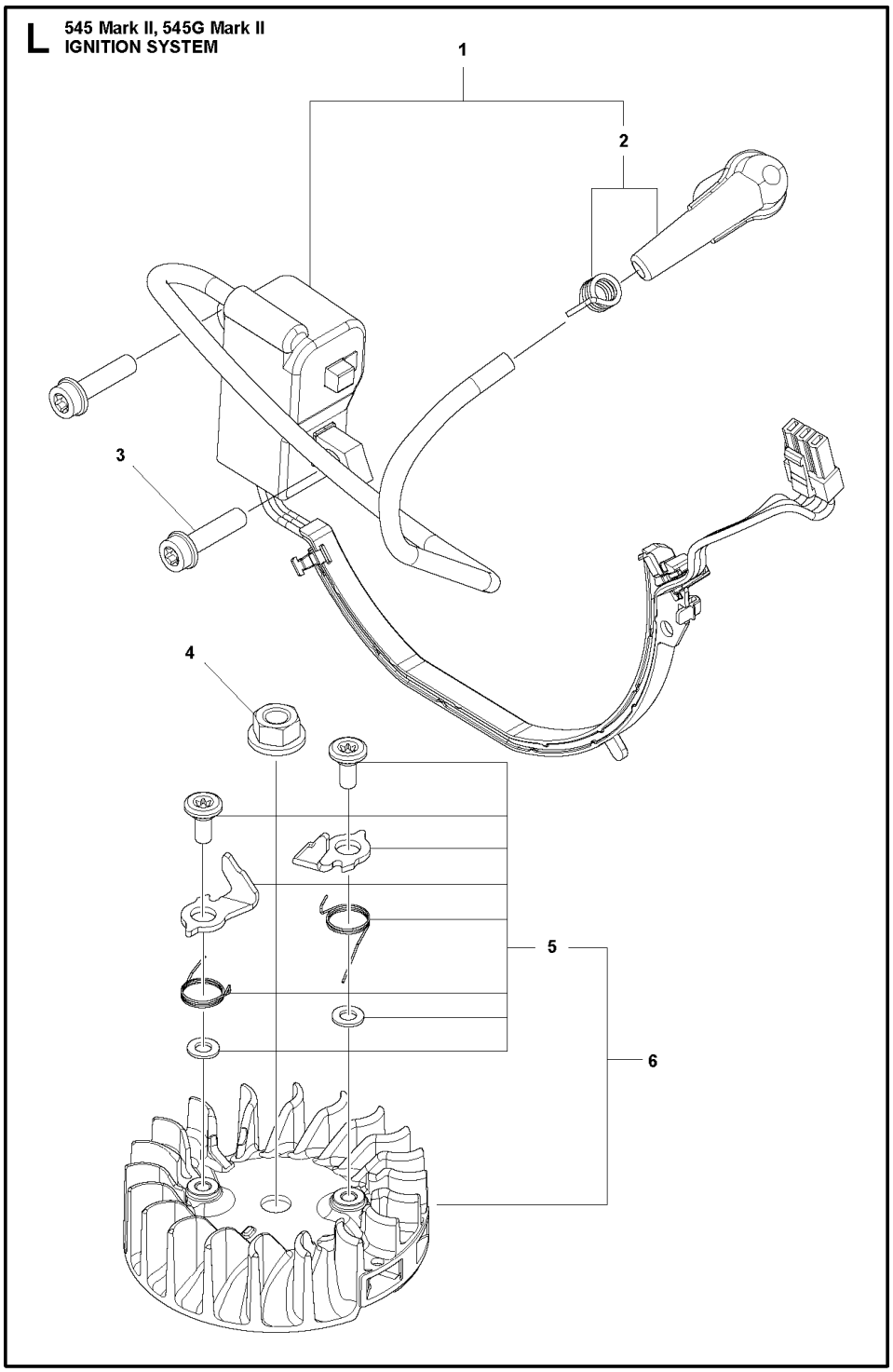

Ref.	Article N.	Description	Qty	Kit
1	503558511	TOOL -	1	-
2	522521101	COMBINATION WRENCH -	1	-
3	502215801	WRENCH -	1	-

Ref.	Article N.	Description	Qty	Kit
4	503558602	SPANNER -	1	-
5	575880701	WRENCH -	1	-
6	503621201	GREASE -	1	-
7	501911401	GREASE GUN -	1	-
8	583897101	DIAGNOSTIC TOOL KIT -	1	-
9	576183401	CABLE ASSY -	1	-
10	576952201	CABLE ASSY -	1	-
11	595967601	WINTER KIT -	1	-
12	740420100	O-RING -	2	-
13	503217016	SCREW CCRPANT -	1	-
14	594745301	BUMPER -	1	-
1	525824401	SCREW ITXSCM	1	-
2	526221801	SCREW CITXPANT	1	-
3	589584501	INSULATION WALL	1	-
4	593784901	INLET PIPE ASSY	1	-
5	503226503	SQUARE NUT	2	-
6	585195001	SUPPORT SLEEVE	1	-
7	589340601	RETAINER	1	-
8	547842601	CARBURETTOR KIT *AT-15C*	1	-
9	526818101	SCREW ITXSCM	4	-
10	536549601	SEALING *From s/n 20240911609 -*	1	-
11	540054901	PURGE *From s/n 20240911609 -*	1	-
12	505156201	SCREW	1	-
13	510017202	CHOKE CONTROL ASSY	1	-
14	523056801	FUEL HOSE	1	-
15	589340701	CONTACT CLAMP	1	-
16	577536402	WIRING ASSY	1	-

Ref.	Article N.	Description	Qty	Kit
17	590458801	AIR FILTER *Nylon Mesh - 64 Micron Rating - Black*	1	-
17	590458802	AIR FILTER *Nylon Mesh - 25 Micron Rating - Yellow*	1	-
17	590458803	AIR FILTER ASSY *Non-Woven - Clear*	1	-
18	525344303	FUEL HOSE	1	-
19	731231401	HEXAGON NUT	1	-
20	525619201	SEALING	1	-
21	581143101	SCREW ITXSCFM	2	-
22	589550703	FILTER HOLDER ASSY *Black*	1	-
23	525619001	SEALING	1	-
24	547549201	PURGE *- up to s/n 20240911608, Sealing and purge*	1	-
1	547842601	CARBURETTOR KIT *AT-15C*	1	-
2	582366201	REPAIR KIT	1	-
3	582366401	GASKET KIT	1	-
4	596969201	GASKET KIT	1	-
1	591083601	HAND GUARD	1	-
2	596218201	SCREW KIT	1	-
3	503751801	PIN	1	-
4	596218101	KNEE JOINT ASSY	1	-
5	505199502	BRAKE BAND ASSY	1	-
6	501846104	CLUTCH COVER ASSY	1	-
7	505201601	GUARD	1	-
8	505199703	COVER	1	-
9	526221801	SCREW CITXPANT	5	-
10	592975201	CHAIN GUIDE	1	-
11	505199801	CHAIN GUIDE	1	-
12	575260404	CHAIN TENSIONER KIT	1	-
13	740480702	O-RING	1	-
14	503230063	WASHER	1	-
15	537017401	BEARING SLEEVE	1	-
16	505197301	NUT	2	-
1	577518202	CLUTCH ASSY	1	-
2	597645401	CLUTCH SPRING	2	-
3	596218303	CLUTCH DRUM ASSY	1	-
4	501457402	RIM SPROCKET	1	-

Ref.	Article N.	Description	Qty	Kit
5	599531501	NEEDLE BEARING	1	-
6	582814001	WORM WHEEL	1	-
7	505199911	OIL PUMP ASSY	1	-
8	503624901	SEALING PLUG	1	-
9	505200204	PUMP PISTON	1	-
10	503230060	WASHER	2	-
11	503891601	SPRING	1	-
12	720123300	PARALLEL PIN	2	-
13	505200101	PUMP CYLINDER	1	-
14	505200402	OIL HOSE	1	-
15	504710003	OIL PLUMMET	1	-
16	526818101	SCREW ITXSCM	2	-
17	505157001	ADJUSTMENT SCREW	1	-
18	721116430	GROOVED PIN	1	-
19	503891501	SPRING	1	-
20	505200301	CASING	1	-
1	575885703	SCREW ITXSCFM	3	-
2	503869301	SUPPORT	2	-
3	544331601	GUIDE PIN	1	-
4	582285201	CARBURETTOR AREA BASE	1	-
5	522620003	TANK CAP ASSY	1	-
6	503578901	HOLDER	1	-
7	589241101	GASKET	1	-
8	595303003	SNAP LOCKING	1	-
9	595897705	CRANKCASE KIT	1	-
10	503751801	PIN	1	-
11	596351401	CATCH	1	-
12	596351301	SPIKE	1	-
13	575793501	SCREW ITXPANM	2	-
14	581559201	BELLOWS	1	-
15	525887401	SCREW CITXPANT	1	-
16	525798103	SCREW ITXSCFT	1	-
17	537377902	CHAIN CATCHER	1	-
18	589721901	CHAIN GUIDE PLATE	1	-
19	537403501	FILTER	1	-
20	530026119	CHECK VALVE	1	-
21	505125801	DEFLECTION LIMITER	1	-
22	505217301	BAR BOLT	2	-

Ref.	Article N.	Description	Qty	Kit
23	720126952	PARALLEL PIN	2	-
24	589331301	SLEEVE	2	-
25	503215325	SCREW ITXSCM	6	-
26	582285901	AIR NOZZLE	1	-
27	526818101	SCREW ITXSCM	1	-
28	525824401	SCREW ITXSCM	1	-
29	501270802	GUIDE BUSHING	2	-
30	595897601	GASKET KIT	1	-
31	596911301	PROTECTIVE CAP *- up to s/n 20224908629*	1	-
1	596218502	CRANKSHAFT KIT	1	-
1	596218504	CRANKSHAFT KIT	1	-
2	501103101	NEEDLE BEARING	1	-
3	536789801	BALL BEARING	1	-
4	597576101	RADIAL SEAL *For SKF Ball bearing 5254342-XX*	1	-
4	536958201	RADIAL SEAL *For HQV Ball bearing 536789801*	1	-
1	591493401	CYLINDER COVER -	1	-
1	574519601	SPARK PLUG	1	-
2	590330508	CYLINDER KIT	1	-
3	525824907	SCREW ITXSCM	4	-
4	576717602	SLEEVE	4	-
5	591177401	GASKET	1	-
6	582702801	PISTON RING	1	-
7	582645602	PISTON ASSY	1	-
8	737441000	SNAP RING	2	-
9	501103101	NEEDLE BEARING	1	-
10	595897601	GASKET KIT	1	-
1	522620003	TANK CAP ASSY	1	-
2	589241101	GASKET	1	-
3	503578901	HOLDER	1	-
4	596550001	THROTTLE CABLE ASSY	1	-
5	596882002	ANTIVIBRATION ELEMENT	1	-
6	720182520	PARALLEL PIN	1	-
7	501007601	SUPPORT	1	-
8	590377401	ANTIVIBRATION ELEMENT	1	-
9	523085501	DEFLECTION LIMITER	1	-

Ref.	Article N.	Description	Qty	Kit
10	501152901	TANK VENT ASSY	1	-
11	529578202	FUEL HOSE ASSY *With magnet*	1	-
12	503443203	FUEL FILTER *18-40 µm (Blue)*	1	-
12	503443205	FUEL FILTER *18-40 µm (Blue) Mega pack (100 pcs)*	1	-
13	544099801	THROTTLE LOCKOUT	1	-
14	544099901	SPRING	1	-
15	505157701	THROTTLE	1	-
16	504106301	HANDLE INSERT	1	-
17	525887402	SCREW CITXPANT	1	-
18	596554002	FUEL TANK KIT	1	-
19	582794105	LABEL	1	-
1	582014901	HANDLE SYSTEM -	1	-
2	525798103	SCREW ITXSCFT -	2	-
3	525798101	SCREW ITXSCFT -	2	-
4	525755101	SCREW ITXSCFM -	1	-
5	595303401	ANTIVIBRATION ELEMENT -	1	-
6	503222401	LOCK NUT -	1	-
1	582777303	IGNITION MODULE ASSY -	1	-
2	596352901	CAP ASSY -	1	-
3	525755102	SCREW ITXSCFM -	2	-
4	503220401	NUT -	1	-
5	596230601	SCREW KIT -	1	-
6	522937805	FLYWHEEL ASSY -	1	-
1	583798701	MUFFLER KIT -	1	-
2	583799301	SPARK ARRESTER -	1	-

Ref.	Article N.	Description	Qty	Kit
3	501515402	SUPPORT -	1	-
4	724128759	SCREW CRPANM -	1	-
5	525825107	SCREW ITXSCM -	2	-
6	583799001	HEAT DEFLECTOR -	1	-
7	583798801	MUFFLER GASKET -	1	-
8	595897601	GASKET KIT -	1	-
9	582885501	SCREW -	2	-
1	531114506	SHORT BLOCK	1	-
1	582866901	COOLING AIR CONDUCTOR -	1	-
2	576356601	SCREW ITXSCT -	1	-
3	582650702	STARTER PULLEY -	1	-
4	505305125	STARTER ROPE -	1	-
5	525887401	SCREW CITXPANT -	2	-
6	505157902	SPRING CASSETTE ASSY -	1	-
7	596230301	STARTER ASSY -	1	-
8	525824501	SCREW CITXPANMO -	4	-
9	582503401	STARTER HOUSING -	1	-
10	537283201	SLEEVE -	1	-
11	537232501	STARTER HANDLE -	1	-
12	590613403	LABEL *545*	1	-
12	590613404	LABEL *545G*	1	-
1	582866901	COOLING AIR CONDUCTOR	1	-
2	576356601	SCREW ITXSCT	1	-

Ref.	Article N.	Description	Qty	Kit
4	503858902	STARTER ROPE	1	-
5	525887401	SCREW CITXPANT	2	-
6	505157902	SPRING CASSETTE ASSY	1	-
7	596230502	STARTER ASSY	1	-
8	525824501	SCREW CITXPANMO	4	-
9	582503401	STARTER HOUSING	1	-
10	537283201	SLEEVE	1	-
11	537232501	STARTER HANDLE	1	-
12	590613403	LABEL *545*	1	-
12	590613404	LABEL *545G*	1	-
13	582644902	TORSION SPRING	1	-
15	599289202	STARTER PULLEY	1	-
1	590260901	HANDLE INSERT	1	-
2	503220401	NUT	1	-
3	596230601	SCREW KIT	1	-
4	522937806	FLYWHEEL ASSY	1	-
5	526818102	SCREW ITXSCM	2	-
6	590260301	STATOR ASSY	1	-
7	588168603	FOIL ELEMENT	1	-
8	590688301	THERMOSTAT ASSY	1	-
9	582014902	HANDLE SYSTEM	1	-
10	503222401	LOCK NUT	1	-
11	590201901	CONTACT PLATE	1	-
12	537252501	CONTACT PLATE	1	-
13	595303401	ANTIVIBRATION ELEMENT	1	-
14	525755101	SCREW ITXSCFM	1	-
15	596201401	PROTECTION	1	-
16	590201801	COVER	1	-
17	578776102	SCREW ITXPANT	1	-
18	525798103	SCREW ITXSCFT	2	-
19	525798101	SCREW ITXSCFT	2	-
20	537088301	GROMMET	1	-
21	581143101	SCREW ITXSCFM	2	-
22	589550704	FILTER HOLDER ASSY *Blue*	1	-
23	525619001	SEALING	1	-
24	525619201	SEALING	1	-

Ref.	Article N.	Description	Qty	Kit
25	731231401	HEXAGON NUT	1	-
26	510017202	CHOKE CONTROL ASSY	1	-
27	505156201	SCREW	1	-

MUFFLER

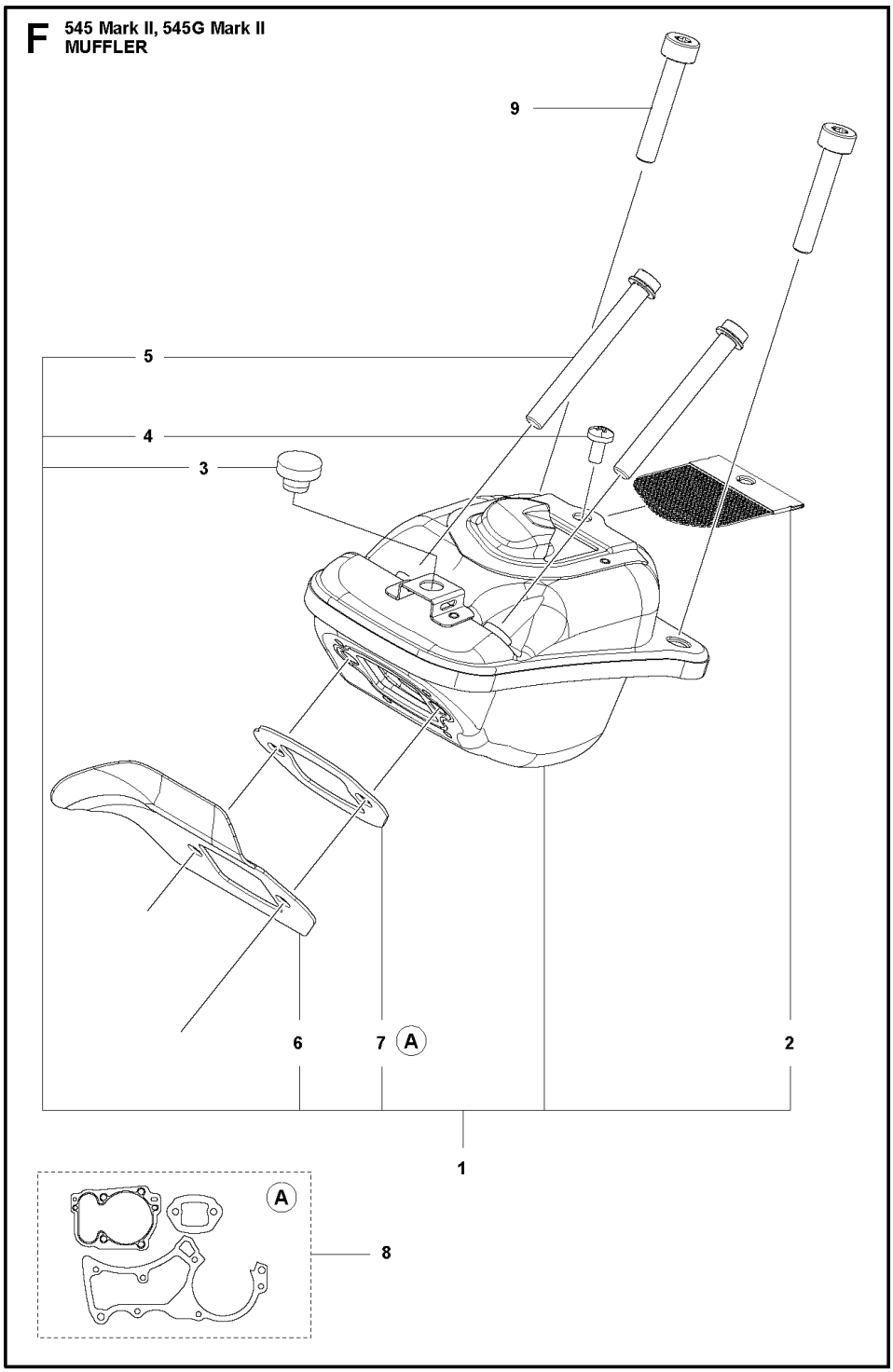

Ref.	Article N.	Description	Qty	Kit
1	503558511	TOOL -	1	-
2	522521101	COMBINATION WRENCH -	1	-
3	502215801	WRENCH -	1	-

Ref.	Article N.	Description	Qty	Kit
4	503558602	SPANNER -	1	-
5	575880701	WRENCH -	1	-
6	503621201	GREASE -	1	-
7	501911401	GREASE GUN -	1	-
8	583897101	DIAGNOSTIC TOOL KIT -	1	-
9	576183401	CABLE ASSY -	1	-
10	576952201	CABLE ASSY -	1	-
11	595967601	WINTER KIT -	1	-
12	740420100	O-RING -	2	-
13	503217016	SCREW CCRPANT -	1	-
14	594745301	BUMPER -	1	-
1	525824401	SCREW ITXSCM	1	-
2	526221801	SCREW CITXPANT	1	-
3	589584501	INSULATION WALL	1	-
4	593784901	INLET PIPE ASSY	1	-
5	503226503	SQUARE NUT	2	-
6	585195001	SUPPORT SLEEVE	1	-
7	589340601	RETAINER	1	-
8	547842601	CARBURETTOR KIT *AT-15C*	1	-
9	526818101	SCREW ITXSCM	4	-
10	536549601	SEALING *From s/n 20240911609 -*	1	-
11	540054901	PURGE *From s/n 20240911609 -*	1	-
12	505156201	SCREW	1	-
13	510017202	CHOKE CONTROL ASSY	1	-
14	523056801	FUEL HOSE	1	-
15	589340701	CONTACT CLAMP	1	-
16	577536402	WIRING ASSY	1	-

Ref.	Article N.	Description	Qty	Kit
17	590458801	AIR FILTER *Nylon Mesh - 64 Micron Rating - Black*	1	-
17	590458802	AIR FILTER *Nylon Mesh - 25 Micron Rating - Yellow*	1	-
17	590458803	AIR FILTER ASSY *Non-Woven - Clear*	1	-
18	525344303	FUEL HOSE	1	-
19	731231401	HEXAGON NUT	1	-
20	525619201	SEALING	1	-
21	581143101	SCREW ITXSCFM	2	-
22	589550703	FILTER HOLDER ASSY *Black*	1	-
23	525619001	SEALING	1	-
24	547549201	PURGE *- up to s/n 20240911608, Sealing and purge*	1	-
1	547842601	CARBURETTOR KIT *AT-15C*	1	-
2	582366201	REPAIR KIT	1	-
3	582366401	GASKET KIT	1	-
4	596969201	GASKET KIT	1	-
1	591083601	HAND GUARD	1	-
2	596218201	SCREW KIT	1	-
3	503751801	PIN	1	-
4	596218101	KNEE JOINT ASSY	1	-
5	505199502	BRAKE BAND ASSY	1	-
6	501846104	CLUTCH COVER ASSY	1	-
7	505201601	GUARD	1	-
8	505199703	COVER	1	-
9	526221801	SCREW CITXPANT	5	-
10	592975201	CHAIN GUIDE	1	-
11	505199801	CHAIN GUIDE	1	-
12	575260404	CHAIN TENSIONER KIT	1	-
13	740480702	O-RING	1	-
14	503230063	WASHER	1	-
15	537017401	BEARING SLEEVE	1	-
16	505197301	NUT	2	-
1	577518202	CLUTCH ASSY	1	-
2	597645401	CLUTCH SPRING	2	-
3	596218303	CLUTCH DRUM ASSY	1	-
4	501457402	RIM SPROCKET	1	-

Ref.	Article N.	Description	Qty	Kit
5	599531501	NEEDLE BEARING	1	-
6	582814001	WORM WHEEL	1	-
7	505199911	OIL PUMP ASSY	1	-
8	503624901	SEALING PLUG	1	-
9	505200204	PUMP PISTON	1	-
10	503230060	WASHER	2	-
11	503891601	SPRING	1	-
12	720123300	PARALLEL PIN	2	-
13	505200101	PUMP CYLINDER	1	-
14	505200402	OIL HOSE	1	-
15	504710003	OIL PLUMMET	1	-
16	526818101	SCREW ITXSCM	2	-
17	505157001	ADJUSTMENT SCREW	1	-
18	721116430	GROOVED PIN	1	-
19	503891501	SPRING	1	-
20	505200301	CASING	1	-
1	575885703	SCREW ITXSCFM	3	-
2	503869301	SUPPORT	2	-
3	544331601	GUIDE PIN	1	-
4	582285201	CARBURETTOR AREA BASE	1	-
5	522620003	TANK CAP ASSY	1	-
6	503578901	HOLDER	1	-
7	589241101	GASKET	1	-
8	595303003	SNAP LOCKING	1	-
9	595897705	CRANKCASE KIT	1	-
10	503751801	PIN	1	-
11	596351401	CATCH	1	-
12	596351301	SPIKE	1	-
13	575793501	SCREW ITXPANM	2	-
14	581559201	BELLOWS	1	-
15	525887401	SCREW CITXPANT	1	-
16	525798103	SCREW ITXSCFT	1	-
17	537377902	CHAIN CATCHER	1	-
18	589721901	CHAIN GUIDE PLATE	1	-
19	537403501	FILTER	1	-
20	530026119	CHECK VALVE	1	-
21	505125801	DEFLECTION LIMITER	1	-
22	505217301	BAR BOLT	2	-

Ref.	Article N.	Description	Qty	Kit
23	720126952	PARALLEL PIN	2	-
24	589331301	SLEEVE	2	-
25	503215325	SCREW ITXSCM	6	-
26	582285901	AIR NOZZLE	1	-
27	526818101	SCREW ITXSCM	1	-
28	525824401	SCREW ITXSCM	1	-
29	501270802	GUIDE BUSHING	2	-
30	595897601	GASKET KIT	1	-
31	596911301	PROTECTIVE CAP *- up to s/n 20224908629*	1	-
1	596218502	CRANKSHAFT KIT	1	-
1	596218504	CRANKSHAFT KIT	1	-
2	501103101	NEEDLE BEARING	1	-
3	536789801	BALL BEARING	1	-
4	597576101	RADIAL SEAL *For SKF Ball bearing 5254342-XX*	1	-
4	536958201	RADIAL SEAL *For HQV Ball bearing 536789801*	1	-
1	591493401	CYLINDER COVER -	1	-
1	574519601	SPARK PLUG	1	-
2	590330508	CYLINDER KIT	1	-
3	525824907	SCREW ITXSCM	4	-
4	576717602	SLEEVE	4	-
5	591177401	GASKET	1	-
6	582702801	PISTON RING	1	-
7	582645602	PISTON ASSY	1	-
8	737441000	SNAP RING	2	-
9	501103101	NEEDLE BEARING	1	-
10	595897601	GASKET KIT	1	-
1	522620003	TANK CAP ASSY	1	-
2	589241101	GASKET	1	-
3	503578901	HOLDER	1	-
4	596550001	THROTTLE CABLE ASSY	1	-
5	596882002	ANTIVIBRATION ELEMENT	1	-
6	720182520	PARALLEL PIN	1	-
7	501007601	SUPPORT	1	-
8	590377401	ANTIVIBRATION ELEMENT	1	-
9	523085501	DEFLECTION LIMITER	1	-

Ref.	Article N.	Description	Qty	Kit
10	501152901	TANK VENT ASSY	1	-
11	529578202	FUEL HOSE ASSY *With magnet*	1	-
12	503443203	FUEL FILTER *18-40 µm (Blue)*	1	-
12	503443205	FUEL FILTER *18-40 µm (Blue) Mega pack (100 pcs)*	1	-
13	544099801	THROTTLE LOCKOUT	1	-
14	544099901	SPRING	1	-
15	505157701	THROTTLE	1	-
16	504106301	HANDLE INSERT	1	-
17	525887402	SCREW CITXPANT	1	-
18	596554002	FUEL TANK KIT	1	-
19	582794105	LABEL	1	-
1	582014901	HANDLE SYSTEM -	1	-
2	525798103	SCREW ITXSCFT -	2	-
3	525798101	SCREW ITXSCFT -	2	-
4	525755101	SCREW ITXSCFM -	1	-
5	595303401	ANTIVIBRATION ELEMENT -	1	-
6	503222401	LOCK NUT -	1	-
1	582777303	IGNITION MODULE ASSY -	1	-
2	596352901	CAP ASSY -	1	-
3	525755102	SCREW ITXSCFM -	2	-
4	503220401	NUT -	1	-
5	596230601	SCREW KIT -	1	-
6	522937805	FLYWHEEL ASSY -	1	-
1	583798701	MUFFLER KIT -	1	-
2	583799301	SPARK ARRESTER -	1	-

Ref.	Article N.	Description	Qty	Kit
3	501515402	SUPPORT -	1	-
4	724128759	SCREW CRPANM -	1	-
5	525825107	SCREW ITXSCM -	2	-
6	583799001	HEAT DEFLECTOR -	1	-
7	583798801	MUFFLER GASKET -	1	-
8	595897601	GASKET KIT -	1	-
9	582885501	SCREW -	2	-
1	531114506	SHORT BLOCK	1	-
1	582866901	COOLING AIR CONDUCTOR -	1	-
2	576356601	SCREW ITXSCT -	1	-
3	582650702	STARTER PULLEY -	1	-
4	505305125	STARTER ROPE -	1	-
5	525887401	SCREW CITXPANT -	2	-
6	505157902	SPRING CASSETTE ASSY -	1	-
7	596230301	STARTER ASSY -	1	-
8	525824501	SCREW CITXPANMO -	4	-
9	582503401	STARTER HOUSING -	1	-
10	537283201	SLEEVE -	1	-
11	537232501	STARTER HANDLE -	1	-
12	590613403	LABEL *545*	1	-
12	590613404	LABEL *545G*	1	-
1	582866901	COOLING AIR CONDUCTOR	1	-
2	576356601	SCREW ITXSCT	1	-

Ref.	Article N.	Description	Qty	Kit
4	503858902	STARTER ROPE	1	-
5	525887401	SCREW CITXPANT	2	-
6	505157902	SPRING CASSETTE ASSY	1	-
7	596230502	STARTER ASSY	1	-
8	525824501	SCREW CITXPANMO	4	-
9	582503401	STARTER HOUSING	1	-
10	537283201	SLEEVE	1	-
11	537232501	STARTER HANDLE	1	-
12	590613403	LABEL *545*	1	-
12	590613404	LABEL *545G*	1	-
13	582644902	TORSION SPRING	1	-
15	599289202	STARTER PULLEY	1	-
1	590260901	HANDLE INSERT	1	-
2	503220401	NUT	1	-
3	596230601	SCREW KIT	1	-
4	522937806	FLYWHEEL ASSY	1	-
5	526818102	SCREW ITXSCM	2	-
6	590260301	STATOR ASSY	1	-
7	588168603	FOIL ELEMENT	1	-
8	590688301	THERMOSTAT ASSY	1	-
9	582014902	HANDLE SYSTEM	1	-
10	503222401	LOCK NUT	1	-
11	590201901	CONTACT PLATE	1	-
12	537252501	CONTACT PLATE	1	-
13	595303401	ANTIVIBRATION ELEMENT	1	-
14	525755101	SCREW ITXSCFM	1	-
15	596201401	PROTECTION	1	-
16	590201801	COVER	1	-
17	578776102	SCREW ITXPANT	1	-
18	525798103	SCREW ITXSCFT	2	-
19	525798101	SCREW ITXSCFT	2	-
20	537088301	GROMMET	1	-
21	581143101	SCREW ITXSCFM	2	-
22	589550704	FILTER HOLDER ASSY *Blue*	1	-
23	525619001	SEALING	1	-
24	525619201	SEALING	1	-

Ref.	Article N.	Description	Qty	Kit
25	731231401	HEXAGON NUT	1	-
26	510017202	CHOKE CONTROL ASSY	1	-
27	505156201	SCREW	1	-

SHORT BLOCK

545 Mark II, 545 G Mark II
SHORT BLOCK

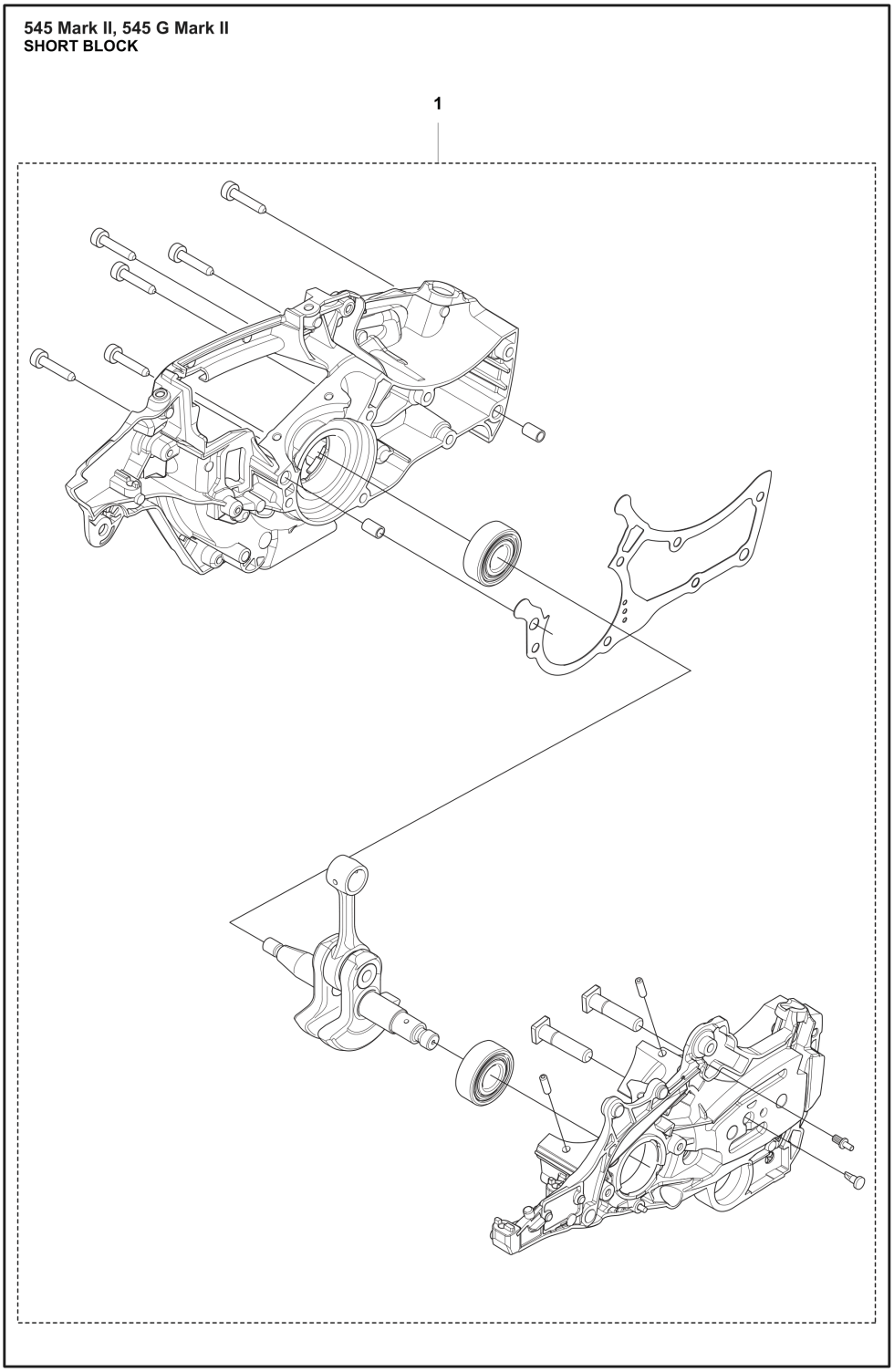

Ref.	Article N.	Description	Qty	Kit
1	503558511	TOOL -	1	-
2	522521101	COMBINATION WRENCH -	1	-
3	502215801	WRENCH -	1	-

Ref.	Article N.	Description	Qty	Kit
4	503558602	SPANNER -	1	-
5	575880701	WRENCH -	1	-
6	503621201	GREASE -	1	-
7	501911401	GREASE GUN -	1	-
8	583897101	DIAGNOSTIC TOOL KIT -	1	-
9	576183401	CABLE ASSY -	1	-
10	576952201	CABLE ASSY -	1	-
11	595967601	WINTER KIT -	1	-
12	740420100	O-RING -	2	-
13	503217016	SCREW CCRPANT -	1	-
14	594745301	BUMPER -	1	-
1	525824401	SCREW ITXSCM	1	-
2	526221801	SCREW CITXPANT	1	-
3	589584501	INSULATION WALL	1	-
4	593784901	INLET PIPE ASSY	1	-
5	503226503	SQUARE NUT	2	-
6	585195001	SUPPORT SLEEVE	1	-
7	589340601	RETAINER	1	-
8	547842601	CARBURETTOR KIT *AT-15C*	1	-
9	526818101	SCREW ITXSCM	4	-
10	536549601	SEALING *From s/n 20240911609 -*	1	-
11	540054901	PURGE *From s/n 20240911609 -*	1	-
12	505156201	SCREW	1	-
13	510017202	CHOKE CONTROL ASSY	1	-
14	523056801	FUEL HOSE	1	-
15	589340701	CONTACT CLAMP	1	-
16	577536402	WIRING ASSY	1	-

Ref.	Article N.	Description	Qty	Kit
17	590458801	AIR FILTER *Nylon Mesh - 64 Micron Rating - Black*	1	-
17	590458802	AIR FILTER *Nylon Mesh - 25 Micron Rating - Yellow*	1	-
17	590458803	AIR FILTER ASSY *Non-Woven - Clear*	1	-
18	525344303	FUEL HOSE	1	-
19	731231401	HEXAGON NUT	1	-
20	525619201	SEALING	1	-
21	581143101	SCREW ITXSCFM	2	-
22	589550703	FILTER HOLDER ASSY *Black*	1	-
23	525619001	SEALING	1	-
24	547549201	PURGE *- up to s/n 20240911608, Sealing and purge*	1	-
1	547842601	CARBURETTOR KIT *AT-15C*	1	-
2	582366201	REPAIR KIT	1	-
3	582366401	GASKET KIT	1	-
4	596969201	GASKET KIT	1	-
1	591083601	HAND GUARD	1	-
2	596218201	SCREW KIT	1	-
3	503751801	PIN	1	-
4	596218101	KNEE JOINT ASSY	1	-
5	505199502	BRAKE BAND ASSY	1	-
6	501846104	CLUTCH COVER ASSY	1	-
7	505201601	GUARD	1	-
8	505199703	COVER	1	-
9	526221801	SCREW CITXPANT	5	-
10	592975201	CHAIN GUIDE	1	-
11	505199801	CHAIN GUIDE	1	-
12	575260404	CHAIN TENSIONER KIT	1	-
13	740480702	O-RING	1	-
14	503230063	WASHER	1	-
15	537017401	BEARING SLEEVE	1	-
16	505197301	NUT	2	-
1	577518202	CLUTCH ASSY	1	-
2	597645401	CLUTCH SPRING	2	-
3	596218303	CLUTCH DRUM ASSY	1	-
4	501457402	RIM SPROCKET	1	-

Ref.	Article N.	Description	Qty	Kit
5	599531501	NEEDLE BEARING	1	-
6	582814001	WORM WHEEL	1	-
7	505199911	OIL PUMP ASSY	1	-
8	503624901	SEALING PLUG	1	-
9	505200204	PUMP PISTON	1	-
10	503230060	WASHER	2	-
11	503891601	SPRING	1	-
12	720123300	PARALLEL PIN	2	-
13	505200101	PUMP CYLINDER	1	-
14	505200402	OIL HOSE	1	-
15	504710003	OIL PLUMMET	1	-
16	526818101	SCREW ITXSCM	2	-
17	505157001	ADJUSTMENT SCREW	1	-
18	721116430	GROOVED PIN	1	-
19	503891501	SPRING	1	-
20	505200301	CASING	1	-
1	575885703	SCREW ITXSCFM	3	-
2	503869301	SUPPORT	2	-
3	544331601	GUIDE PIN	1	-
4	582285201	CARBURETTOR AREA BASE	1	-
5	522620003	TANK CAP ASSY	1	-
6	503578901	HOLDER	1	-
7	589241101	GASKET	1	-
8	595303003	SNAP LOCKING	1	-
9	595897705	CRANKCASE KIT	1	-
10	503751801	PIN	1	-
11	596351401	CATCH	1	-
12	596351301	SPIKE	1	-
13	575793501	SCREW ITXPANM	2	-
14	581559201	BELLOWS	1	-
15	525887401	SCREW CITXPANT	1	-
16	525798103	SCREW ITXSCFT	1	-
17	537377902	CHAIN CATCHER	1	-
18	589721901	CHAIN GUIDE PLATE	1	-
19	537403501	FILTER	1	-
20	530026119	CHECK VALVE	1	-
21	505125801	DEFLECTION LIMITER	1	-
22	505217301	BAR BOLT	2	-

Ref.	Article N.	Description	Qty	Kit
23	720126952	PARALLEL PIN	2	-
24	589331301	SLEEVE	2	-
25	503215325	SCREW ITXSCM	6	-
26	582285901	AIR NOZZLE	1	-
27	526818101	SCREW ITXSCM	1	-
28	525824401	SCREW ITXSCM	1	-
29	501270802	GUIDE BUSHING	2	-
30	595897601	GASKET KIT	1	-
31	596911301	PROTECTIVE CAP *- up to s/n 20224908629*	1	-
1	596218502	CRANKSHAFT KIT	1	-
1	596218504	CRANKSHAFT KIT	1	-
2	501103101	NEEDLE BEARING	1	-
3	536789801	BALL BEARING	1	-
4	597576101	RADIAL SEAL *For SKF Ball bearing 5254342-XX*	1	-
4	536958201	RADIAL SEAL *For HQV Ball bearing 536789801*	1	-
1	591493401	CYLINDER COVER -	1	-
1	574519601	SPARK PLUG	1	-
2	590330508	CYLINDER KIT	1	-
3	525824907	SCREW ITXSCM	4	-
4	576717602	SLEEVE	4	-
5	591177401	GASKET	1	-
6	582702801	PISTON RING	1	-
7	582645602	PISTON ASSY	1	-
8	737441000	SNAP RING	2	-
9	501103101	NEEDLE BEARING	1	-
10	595897601	GASKET KIT	1	-
1	522620003	TANK CAP ASSY	1	-
2	589241101	GASKET	1	-
3	503578901	HOLDER	1	-
4	596550001	THROTTLE CABLE ASSY	1	-
5	596882002	ANTIVIBRATION ELEMENT	1	-
6	720182520	PARALLEL PIN	1	-
7	501007601	SUPPORT	1	-
8	590377401	ANTIVIBRATION ELEMENT	1	-
9	523085501	DEFLECTION LIMITER	1	-

Ref.	Article N.	Description	Qty	Kit
10	501152901	TANK VENT ASSY	1	-
11	529578202	FUEL HOSE ASSY *With magnet*	1	-
12	503443203	FUEL FILTER *18-40 µm (Blue)*	1	-
12	503443205	FUEL FILTER *18-40 µm (Blue) Mega pack (100 pcs)*	1	-
13	544099801	THROTTLE LOCKOUT	1	-
14	544099901	SPRING	1	-
15	505157701	THROTTLE	1	-
16	504106301	HANDLE INSERT	1	-
17	525887402	SCREW CITXPANT	1	-
18	596554002	FUEL TANK KIT	1	-
19	582794105	LABEL	1	-
1	582014901	HANDLE SYSTEM -	1	-
2	525798103	SCREW ITXSCFT -	2	-
3	525798101	SCREW ITXSCFT -	2	-
4	525755101	SCREW ITXSCFM -	1	-
5	595303401	ANTIVIBRATION ELEMENT -	1	-
6	503222401	LOCK NUT -	1	-
1	582777303	IGNITION MODULE ASSY -	1	-
2	596352901	CAP ASSY -	1	-
3	525755102	SCREW ITXSCFM -	2	-
4	503220401	NUT -	1	-
5	596230601	SCREW KIT -	1	-
6	522937805	FLYWHEEL ASSY -	1	-
1	583798701	MUFFLER KIT -	1	-
2	583799301	SPARK ARRESTER -	1	-

Ref.	Article N.	Description	Qty	Kit
3	501515402	SUPPORT -	1	-
4	724128759	SCREW CRPANM -	1	-
5	525825107	SCREW ITXSCM -	2	-
6	583799001	HEAT DEFLECTOR -	1	-
7	583798801	MUFFLER GASKET -	1	-
8	595897601	GASKET KIT -	1	-
9	582885501	SCREW -	2	-
1	531114506	SHORT BLOCK	1	-
1	582866901	COOLING AIR CONDUCTOR -	1	-
2	576356601	SCREW ITXSCT -	1	-
3	582650702	STARTER PULLEY -	1	-
4	505305125	STARTER ROPE -	1	-
5	525887401	SCREW CITXPANT -	2	-
6	505157902	SPRING CASSETTE ASSY -	1	-
7	596230301	STARTER ASSY -	1	-
8	525824501	SCREW CITXPANMO -	4	-
9	582503401	STARTER HOUSING -	1	-
10	537283201	SLEEVE -	1	-
11	537232501	STARTER HANDLE -	1	-
12	590613403	LABEL *545*	1	-
12	590613404	LABEL *545G*	1	-
1	582866901	COOLING AIR CONDUCTOR	1	-
2	576356601	SCREW ITXSCT	1	-

Ref.	Article N.	Description	Qty	Kit
4	503858902	STARTER ROPE	1	-
5	525887401	SCREW CITXPANT	2	-
6	505157902	SPRING CASSETTE ASSY	1	-
7	596230502	STARTER ASSY	1	-
8	525824501	SCREW CITXPANMO	4	-
9	582503401	STARTER HOUSING	1	-
10	537283201	SLEEVE	1	-
11	537232501	STARTER HANDLE	1	-
12	590613403	LABEL *545*	1	-
12	590613404	LABEL *545G*	1	-
13	582644902	TORSION SPRING	1	-
15	599289202	STARTER PULLEY	1	-
1	590260901	HANDLE INSERT	1	-
2	503220401	NUT	1	-
3	596230601	SCREW KIT	1	-
4	522937806	FLYWHEEL ASSY	1	-
5	526818102	SCREW ITXSCM	2	-
6	590260301	STATOR ASSY	1	-
7	588168603	FOIL ELEMENT	1	-
8	590688301	THERMOSTAT ASSY	1	-
9	582014902	HANDLE SYSTEM	1	-
10	503222401	LOCK NUT	1	-
11	590201901	CONTACT PLATE	1	-
12	537252501	CONTACT PLATE	1	-
13	595303401	ANTIVIBRATION ELEMENT	1	-
14	525755101	SCREW ITXSCFM	1	-
15	596201401	PROTECTION	1	-
16	590201801	COVER	1	-
17	578776102	SCREW ITXPANT	1	-
18	525798103	SCREW ITXSCFT	2	-
19	525798101	SCREW ITXSCFT	2	-
20	537088301	GROMMET	1	-
21	581143101	SCREW ITXSCFM	2	-
22	589550704	FILTER HOLDER ASSY *Blue*	1	-
23	525619001	SEALING	1	-
24	525619201	SEALING	1	-

Ref.	Article N.	Description	Qty	Kit
25	731231401	HEXAGON NUT	1	-
26	510017202	CHOKE CONTROL ASSY	1	-
27	505156201	SCREW	1	-

STARTER

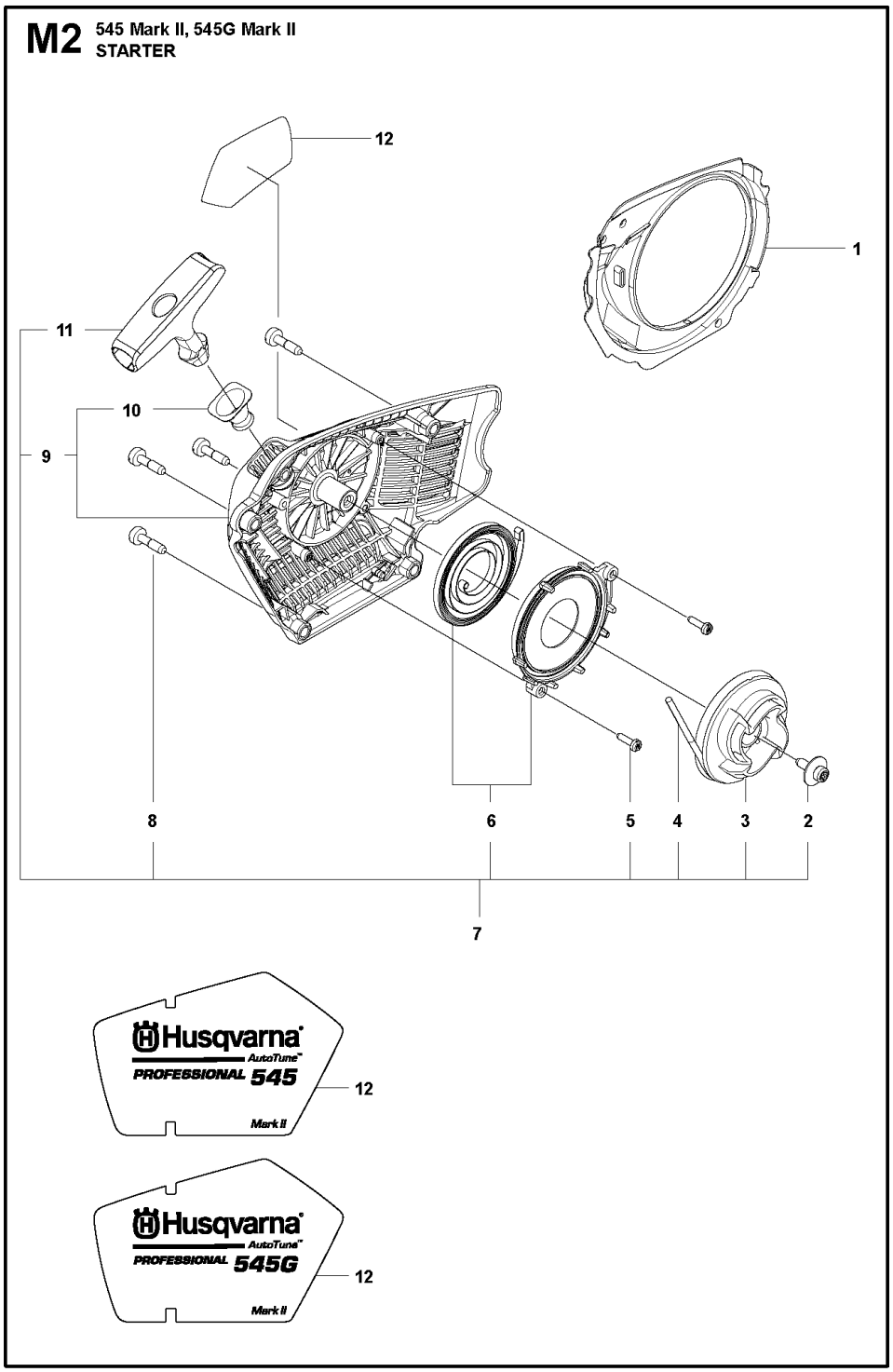

Ref.	Article N.	Description	Qty	Kit
1	503558511	TOOL -	1	-
2	522521101	COMBINATION WRENCH -	1	-
3	502215801	WRENCH -	1	-

Ref.	Article N.	Description	Qty	Kit
4	503558602	SPANNER -	1	-
5	575880701	WRENCH -	1	-
6	503621201	GREASE -	1	-
7	501911401	GREASE GUN -	1	-
8	583897101	DIAGNOSTIC TOOL KIT -	1	-
9	576183401	CABLE ASSY -	1	-
10	576952201	CABLE ASSY -	1	-
11	595967601	WINTER KIT -	1	-
12	740420100	O-RING -	2	-
13	503217016	SCREW CCRPANT -	1	-
14	594745301	BUMPER -	1	-
1	525824401	SCREW ITXSCM	1	-
2	526221801	SCREW CITXPANT	1	-
3	589584501	INSULATION WALL	1	-
4	593784901	INLET PIPE ASSY	1	-
5	503226503	SQUARE NUT	2	-
6	585195001	SUPPORT SLEEVE	1	-
7	589340601	RETAINER	1	-
8	547842601	CARBURETTOR KIT *AT-15C*	1	-
9	526818101	SCREW ITXSCM	4	-
10	536549601	SEALING *From s/n 20240911609 -*	1	-
11	540054901	PURGE *From s/n 20240911609 -*	1	-
12	505156201	SCREW	1	-
13	510017202	CHOKE CONTROL ASSY	1	-
14	523056801	FUEL HOSE	1	-
15	589340701	CONTACT CLAMP	1	-
16	577536402	WIRING ASSY	1	-

Ref.	Article N.	Description	Qty	Kit
17	590458801	AIR FILTER *Nylon Mesh - 64 Micron Rating - Black*	1	-
17	590458802	AIR FILTER *Nylon Mesh - 25 Micron Rating - Yellow*	1	-
17	590458803	AIR FILTER ASSY *Non-Woven - Clear*	1	-
18	525344303	FUEL HOSE	1	-
19	731231401	HEXAGON NUT	1	-
20	525619201	SEALING	1	-
21	581143101	SCREW ITXSCFM	2	-
22	589550703	FILTER HOLDER ASSY *Black*	1	-
23	525619001	SEALING	1	-
24	547549201	PURGE *- up to s/n 20240911608, Sealing and purge*	1	-
1	547842601	CARBURETTOR KIT *AT-15C*	1	-
2	582366201	REPAIR KIT	1	-
3	582366401	GASKET KIT	1	-
4	596969201	GASKET KIT	1	-
1	591083601	HAND GUARD	1	-
2	596218201	SCREW KIT	1	-
3	503751801	PIN	1	-
4	596218101	KNEE JOINT ASSY	1	-
5	505199502	BRAKE BAND ASSY	1	-
6	501846104	CLUTCH COVER ASSY	1	-
7	505201601	GUARD	1	-
8	505199703	COVER	1	-
9	526221801	SCREW CITXPANT	5	-
10	592975201	CHAIN GUIDE	1	-
11	505199801	CHAIN GUIDE	1	-
12	575260404	CHAIN TENSIONER KIT	1	-
13	740480702	O-RING	1	-
14	503230063	WASHER	1	-
15	537017401	BEARING SLEEVE	1	-
16	505197301	NUT	2	-
1	577518202	CLUTCH ASSY	1	-
2	597645401	CLUTCH SPRING	2	-
3	596218303	CLUTCH DRUM ASSY	1	-
4	501457402	RIM SPROCKET	1	-

Ref.	Article N.	Description	Qty	Kit
5	599531501	NEEDLE BEARING	1	-
6	582814001	WORM WHEEL	1	-
7	505199911	OIL PUMP ASSY	1	-
8	503624901	SEALING PLUG	1	-
9	505200204	PUMP PISTON	1	-
10	503230060	WASHER	2	-
11	503891601	SPRING	1	-
12	720123300	PARALLEL PIN	2	-
13	505200101	PUMP CYLINDER	1	-
14	505200402	OIL HOSE	1	-
15	504710003	OIL PLUMMET	1	-
16	526818101	SCREW ITXSCM	2	-
17	505157001	ADJUSTMENT SCREW	1	-
18	721116430	GROOVED PIN	1	-
19	503891501	SPRING	1	-
20	505200301	CASING	1	-
1	575885703	SCREW ITXSCFM	3	-
2	503869301	SUPPORT	2	-
3	544331601	GUIDE PIN	1	-
4	582285201	CARBURETTOR AREA BASE	1	-
5	522620003	TANK CAP ASSY	1	-
6	503578901	HOLDER	1	-
7	589241101	GASKET	1	-
8	595303003	SNAP LOCKING	1	-
9	595897705	CRANKCASE KIT	1	-
10	503751801	PIN	1	-
11	596351401	CATCH	1	-
12	596351301	SPIKE	1	-
13	575793501	SCREW ITXPANM	2	-
14	581559201	BELLOWS	1	-
15	525887401	SCREW CITXPANT	1	-
16	525798103	SCREW ITXSCFT	1	-
17	537377902	CHAIN CATCHER	1	-
18	589721901	CHAIN GUIDE PLATE	1	-
19	537403501	FILTER	1	-
20	530026119	CHECK VALVE	1	-
21	505125801	DEFLECTION LIMITER	1	-
22	505217301	BAR BOLT	2	-

Ref.	Article N.	Description	Qty	Kit
23	720126952	PARALLEL PIN	2	-
24	589331301	SLEEVE	2	-
25	503215325	SCREW ITXSCM	6	-
26	582285901	AIR NOZZLE	1	-
27	526818101	SCREW ITXSCM	1	-
28	525824401	SCREW ITXSCM	1	-
29	501270802	GUIDE BUSHING	2	-
30	595897601	GASKET KIT	1	-
31	596911301	PROTECTIVE CAP *- up to s/n 20224908629*	1	-
1	596218502	CRANKSHAFT KIT	1	-
1	596218504	CRANKSHAFT KIT	1	-
2	501103101	NEEDLE BEARING	1	-
3	536789801	BALL BEARING	1	-
4	597576101	RADIAL SEAL *For SKF Ball bearing 5254342-XX*	1	-
4	536958201	RADIAL SEAL *For HQV Ball bearing 536789801*	1	-
1	591493401	CYLINDER COVER -	1	-
1	574519601	SPARK PLUG	1	-
2	590330508	CYLINDER KIT	1	-
3	525824907	SCREW ITXSCM	4	-
4	576717602	SLEEVE	4	-
5	591177401	GASKET	1	-
6	582702801	PISTON RING	1	-
7	582645602	PISTON ASSY	1	-
8	737441000	SNAP RING	2	-
9	501103101	NEEDLE BEARING	1	-
10	595897601	GASKET KIT	1	-
1	522620003	TANK CAP ASSY	1	-
2	589241101	GASKET	1	-
3	503578901	HOLDER	1	-
4	596550001	THROTTLE CABLE ASSY	1	-
5	596882002	ANTIVIBRATION ELEMENT	1	-
6	720182520	PARALLEL PIN	1	-
7	501007601	SUPPORT	1	-
8	590377401	ANTIVIBRATION ELEMENT	1	-
9	523085501	DEFLECTION LIMITER	1	-

Ref.	Article N.	Description	Qty	Kit
10	501152901	TANK VENT ASSY	1	-
11	529578202	FUEL HOSE ASSY *With magnet*	1	-
12	503443203	FUEL FILTER *18-40 µm (Blue)*	1	-
12	503443205	FUEL FILTER *18-40 µm (Blue) Mega pack (100 pcs)*	1	-
13	544099801	THROTTLE LOCKOUT	1	-
14	544099901	SPRING	1	-
15	505157701	THROTTLE	1	-
16	504106301	HANDLE INSERT	1	-
17	525887402	SCREW CITXPANT	1	-
18	596554002	FUEL TANK KIT	1	-
19	582794105	LABEL	1	-
1	582014901	HANDLE SYSTEM -	1	-
2	525798103	SCREW ITXSCFT -	2	-
3	525798101	SCREW ITXSCFT -	2	-
4	525755101	SCREW ITXSCFM -	1	-
5	595303401	ANTIVIBRATION ELEMENT -	1	-
6	503222401	LOCK NUT -	1	-
1	582777303	IGNITION MODULE ASSY -	1	-
2	596352901	CAP ASSY -	1	-
3	525755102	SCREW ITXSCFM -	2	-
4	503220401	NUT -	1	-
5	596230601	SCREW KIT -	1	-
6	522937805	FLYWHEEL ASSY -	1	-
1	583798701	MUFFLER KIT -	1	-
2	583799301	SPARK ARRESTER -	1	-

Ref.	Article N.	Description	Qty	Kit
3	501515402	SUPPORT -	1	-
4	724128759	SCREW CRPANM -	1	-
5	525825107	SCREW ITXSCM -	2	-
6	583799001	HEAT DEFLECTOR -	1	-
7	583798801	MUFFLER GASKET -	1	-
8	595897601	GASKET KIT -	1	-
9	582885501	SCREW -	2	-
1	531114506	SHORT BLOCK	1	-
1	582866901	COOLING AIR CONDUCTOR -	1	-
2	576356601	SCREW ITXSCT -	1	-
3	582650702	STARTER PULLEY -	1	-
4	505305125	STARTER ROPE -	1	-
5	525887401	SCREW CITXPANT -	2	-
6	505157902	SPRING CASSETTE ASSY -	1	-
7	596230301	STARTER ASSY -	1	-
8	525824501	SCREW CITXPANMO -	4	-
9	582503401	STARTER HOUSING -	1	-
10	537283201	SLEEVE -	1	-
11	537232501	STARTER HANDLE -	1	-
12	590613403	LABEL *545*	1	-
12	590613404	LABEL *545G*	1	-
1	582866901	COOLING AIR CONDUCTOR	1	-
2	576356601	SCREW ITXSCT	1	-

Ref.	Article N.	Description	Qty	Kit
4	503858902	STARTER ROPE	1	-
5	525887401	SCREW CITXPANT	2	-
6	505157902	SPRING CASSETTE ASSY	1	-
7	596230502	STARTER ASSY	1	-
8	525824501	SCREW CITXPANMO	4	-
9	582503401	STARTER HOUSING	1	-
10	537283201	SLEEVE	1	-
11	537232501	STARTER HANDLE	1	-
12	590613403	LABEL *545*	1	-
12	590613404	LABEL *545G*	1	-
13	582644902	TORSION SPRING	1	-
15	599289202	STARTER PULLEY	1	-
1	590260901	HANDLE INSERT	1	-
2	503220401	NUT	1	-
3	596230601	SCREW KIT	1	-
4	522937806	FLYWHEEL ASSY	1	-
5	526818102	SCREW ITXSCM	2	-
6	590260301	STATOR ASSY	1	-
7	588168603	FOIL ELEMENT	1	-
8	590688301	THERMOSTAT ASSY	1	-
9	582014902	HANDLE SYSTEM	1	-
10	503222401	LOCK NUT	1	-
11	590201901	CONTACT PLATE	1	-
12	537252501	CONTACT PLATE	1	-
13	595303401	ANTIVIBRATION ELEMENT	1	-
14	525755101	SCREW ITXSCFM	1	-
15	596201401	PROTECTION	1	-
16	590201801	COVER	1	-
17	578776102	SCREW ITXPANT	1	-
18	525798103	SCREW ITXSCFT	2	-
19	525798101	SCREW ITXSCFT	2	-
20	537088301	GROMMET	1	-
21	581143101	SCREW ITXSCFM	2	-
22	589550704	FILTER HOLDER ASSY *Blue*	1	-
23	525619001	SEALING	1	-
24	525619201	SEALING	1	-

Ref.	Article N.	Description	Qty	Kit
25	731231401	HEXAGON NUT	1	-
26	510017202	CHOKE CONTROL ASSY	1	-
27	505156201	SCREW	1	-

STARTER

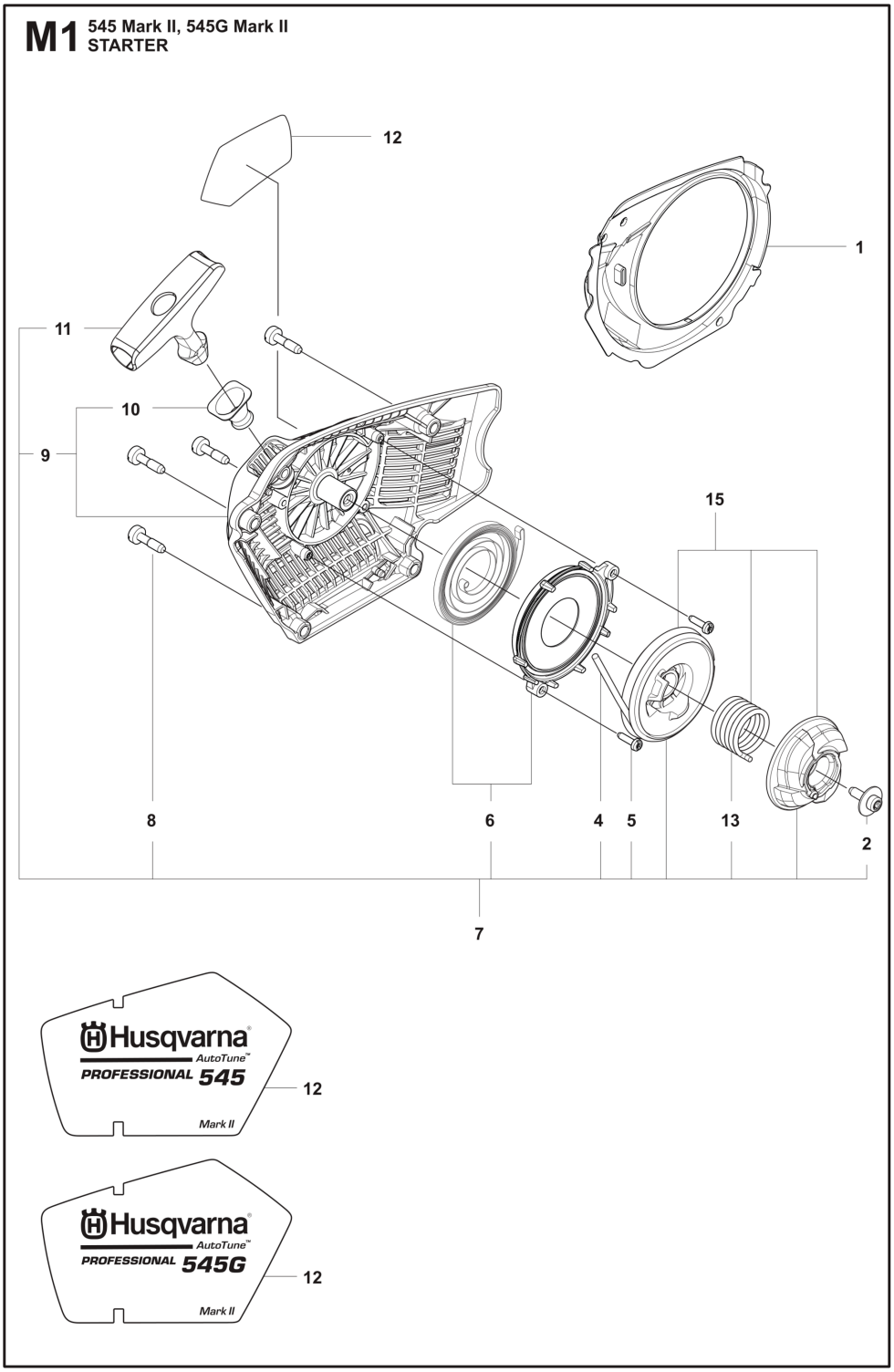

Ref.	Article N.	Description	Qty	Kit
1	503558511	TOOL -	1	-
2	522521101	COMBINATION WRENCH -	1	-
3	502215801	WRENCH -	1	-

Ref.	Article N.	Description	Qty	Kit
4	503558602	SPANNER -	1	-
5	575880701	WRENCH -	1	-
6	503621201	GREASE -	1	-
7	501911401	GREASE GUN -	1	-
8	583897101	DIAGNOSTIC TOOL KIT -	1	-
9	576183401	CABLE ASSY -	1	-
10	576952201	CABLE ASSY -	1	-
11	595967601	WINTER KIT -	1	-
12	740420100	O-RING -	2	-
13	503217016	SCREW CCRPANT -	1	-
14	594745301	BUMPER -	1	-
1	525824401	SCREW ITXSCM	1	-
2	526221801	SCREW CITXPANT	1	-
3	589584501	INSULATION WALL	1	-
4	593784901	INLET PIPE ASSY	1	-
5	503226503	SQUARE NUT	2	-
6	585195001	SUPPORT SLEEVE	1	-
7	589340601	RETAINER	1	-
8	547842601	CARBURETTOR KIT *AT-15C*	1	-
9	526818101	SCREW ITXSCM	4	-
10	536549601	SEALING *From s/n 20240911609 -*	1	-
11	540054901	PURGE *From s/n 20240911609 -*	1	-
12	505156201	SCREW	1	-
13	510017202	CHOKE CONTROL ASSY	1	-
14	523056801	FUEL HOSE	1	-
15	589340701	CONTACT CLAMP	1	-
16	577536402	WIRING ASSY	1	-

Ref.	Article N.	Description	Qty	Kit
17	590458801	AIR FILTER *Nylon Mesh - 64 Micron Rating - Black*	1	-
17	590458802	AIR FILTER *Nylon Mesh - 25 Micron Rating - Yellow*	1	-
17	590458803	AIR FILTER ASSY *Non-Woven - Clear*	1	-
18	525344303	FUEL HOSE	1	-
19	731231401	HEXAGON NUT	1	-
20	525619201	SEALING	1	-
21	581143101	SCREW ITXSCFM	2	-
22	589550703	FILTER HOLDER ASSY *Black*	1	-
23	525619001	SEALING	1	-
24	547549201	PURGE *- up to s/n 20240911608, Sealing and purge*	1	-
1	547842601	CARBURETTOR KIT *AT-15C*	1	-
2	582366201	REPAIR KIT	1	-
3	582366401	GASKET KIT	1	-
4	596969201	GASKET KIT	1	-
1	591083601	HAND GUARD	1	-
2	596218201	SCREW KIT	1	-
3	503751801	PIN	1	-
4	596218101	KNEE JOINT ASSY	1	-
5	505199502	BRAKE BAND ASSY	1	-
6	501846104	CLUTCH COVER ASSY	1	-
7	505201601	GUARD	1	-
8	505199703	COVER	1	-
9	526221801	SCREW CITXPANT	5	-
10	592975201	CHAIN GUIDE	1	-
11	505199801	CHAIN GUIDE	1	-
12	575260404	CHAIN TENSIONER KIT	1	-
13	740480702	O-RING	1	-
14	503230063	WASHER	1	-
15	537017401	BEARING SLEEVE	1	-
16	505197301	NUT	2	-
1	577518202	CLUTCH ASSY	1	-
2	597645401	CLUTCH SPRING	2	-
3	596218303	CLUTCH DRUM ASSY	1	-
4	501457402	RIM SPROCKET	1	-

Ref.	Article N.	Description	Qty	Kit
5	599531501	NEEDLE BEARING	1	-
6	582814001	WORM WHEEL	1	-
7	505199911	OIL PUMP ASSY	1	-
8	503624901	SEALING PLUG	1	-
9	505200204	PUMP PISTON	1	-
10	503230060	WASHER	2	-
11	503891601	SPRING	1	-
12	720123300	PARALLEL PIN	2	-
13	505200101	PUMP CYLINDER	1	-
14	505200402	OIL HOSE	1	-
15	504710003	OIL PLUMMET	1	-
16	526818101	SCREW ITXSCM	2	-
17	505157001	ADJUSTMENT SCREW	1	-
18	721116430	GROOVED PIN	1	-
19	503891501	SPRING	1	-
20	505200301	CASING	1	-
1	575885703	SCREW ITXSCFM	3	-
2	503869301	SUPPORT	2	-
3	544331601	GUIDE PIN	1	-
4	582285201	CARBURETTOR AREA BASE	1	-
5	522620003	TANK CAP ASSY	1	-
6	503578901	HOLDER	1	-
7	589241101	GASKET	1	-
8	595303003	SNAP LOCKING	1	-
9	595897705	CRANKCASE KIT	1	-
10	503751801	PIN	1	-
11	596351401	CATCH	1	-
12	596351301	SPIKE	1	-
13	575793501	SCREW ITXPANM	2	-
14	581559201	BELLOWS	1	-
15	525887401	SCREW CITXPANT	1	-
16	525798103	SCREW ITXSCFT	1	-
17	537377902	CHAIN CATCHER	1	-
18	589721901	CHAIN GUIDE PLATE	1	-
19	537403501	FILTER	1	-
20	530026119	CHECK VALVE	1	-
21	505125801	DEFLECTION LIMITER	1	-
22	505217301	BAR BOLT	2	-

Ref.	Article N.	Description	Qty	Kit
23	720126952	PARALLEL PIN	2	-
24	589331301	SLEEVE	2	-
25	503215325	SCREW ITXSCM	6	-
26	582285901	AIR NOZZLE	1	-
27	526818101	SCREW ITXSCM	1	-
28	525824401	SCREW ITXSCM	1	-
29	501270802	GUIDE BUSHING	2	-
30	595897601	GASKET KIT	1	-
31	596911301	PROTECTIVE CAP *- up to s/n 20224908629*	1	-
1	596218502	CRANKSHAFT KIT	1	-
1	596218504	CRANKSHAFT KIT	1	-
2	501103101	NEEDLE BEARING	1	-
3	536789801	BALL BEARING	1	-
4	597576101	RADIAL SEAL *For SKF Ball bearing 5254342-XX*	1	-
4	536958201	RADIAL SEAL *For HQV Ball bearing 536789801*	1	-
1	591493401	CYLINDER COVER -	1	-
1	574519601	SPARK PLUG	1	-
2	590330508	CYLINDER KIT	1	-
3	525824907	SCREW ITXSCM	4	-
4	576717602	SLEEVE	4	-
5	591177401	GASKET	1	-
6	582702801	PISTON RING	1	-
7	582645602	PISTON ASSY	1	-
8	737441000	SNAP RING	2	-
9	501103101	NEEDLE BEARING	1	-
10	595897601	GASKET KIT	1	-
1	522620003	TANK CAP ASSY	1	-
2	589241101	GASKET	1	-
3	503578901	HOLDER	1	-
4	596550001	THROTTLE CABLE ASSY	1	-
5	596882002	ANTIVIBRATION ELEMENT	1	-
6	720182520	PARALLEL PIN	1	-
7	501007601	SUPPORT	1	-
8	590377401	ANTIVIBRATION ELEMENT	1	-
9	523085501	DEFLECTION LIMITER	1	-

Ref.	Article N.	Description	Qty	Kit
10	501152901	TANK VENT ASSY	1	-
11	529578202	FUEL HOSE ASSY *With magnet*	1	-
12	503443203	FUEL FILTER *18-40 µm (Blue)*	1	-
12	503443205	FUEL FILTER *18-40 µm (Blue) Mega pack (100 pcs)*	1	-
13	544099801	THROTTLE LOCKOUT	1	-
14	544099901	SPRING	1	-
15	505157701	THROTTLE	1	-
16	504106301	HANDLE INSERT	1	-
17	525887402	SCREW CITXPANT	1	-
18	596554002	FUEL TANK KIT	1	-
19	582794105	LABEL	1	-
1	582014901	HANDLE SYSTEM -	1	-
2	525798103	SCREW ITXSCFT -	2	-
3	525798101	SCREW ITXSCFT -	2	-
4	525755101	SCREW ITXSCFM -	1	-
5	595303401	ANTIVIBRATION ELEMENT -	1	-
6	503222401	LOCK NUT -	1	-
1	582777303	IGNITION MODULE ASSY -	1	-
2	596352901	CAP ASSY -	1	-
3	525755102	SCREW ITXSCFM -	2	-
4	503220401	NUT -	1	-
5	596230601	SCREW KIT -	1	-
6	522937805	FLYWHEEL ASSY -	1	-
1	583798701	MUFFLER KIT -	1	-
2	583799301	SPARK ARRESTER -	1	-

Ref.	Article N.	Description	Qty	Kit
3	501515402	SUPPORT -	1	-
4	724128759	SCREW CRPANM -	1	-
5	525825107	SCREW ITXSCM -	2	-
6	583799001	HEAT DEFLECTOR -	1	-
7	583798801	MUFFLER GASKET -	1	-
8	595897601	GASKET KIT -	1	-
9	582885501	SCREW -	2	-
1	531114506	SHORT BLOCK	1	-
1	582866901	COOLING AIR CONDUCTOR -	1	-
2	576356601	SCREW ITXSCT -	1	-
3	582650702	STARTER PULLEY -	1	-
4	505305125	STARTER ROPE -	1	-
5	525887401	SCREW CITXPANT -	2	-
6	505157902	SPRING CASSETTE ASSY -	1	-
7	596230301	STARTER ASSY -	1	-
8	525824501	SCREW CITXPANMO -	4	-
9	582503401	STARTER HOUSING -	1	-
10	537283201	SLEEVE -	1	-
11	537232501	STARTER HANDLE -	1	-
12	590613403	LABEL *545*	1	-
12	590613404	LABEL *545G*	1	-
1	582866901	COOLING AIR CONDUCTOR	1	-
2	576356601	SCREW ITXSCT	1	-

Ref.	Article N.	Description	Qty	Kit
4	503858902	STARTER ROPE	1	-
5	525887401	SCREW CITXPANT	2	-
6	505157902	SPRING CASSETTE ASSY	1	-
7	596230502	STARTER ASSY	1	-
8	525824501	SCREW CITXPANMO	4	-
9	582503401	STARTER HOUSING	1	-
10	537283201	SLEEVE	1	-
11	537232501	STARTER HANDLE	1	-
12	590613403	LABEL *545*	1	-
12	590613404	LABEL *545G*	1	-
13	582644902	TORSION SPRING	1	-
15	599289202	STARTER PULLEY	1	-
1	590260901	HANDLE INSERT	1	-
2	503220401	NUT	1	-
3	596230601	SCREW KIT	1	-
4	522937806	FLYWHEEL ASSY	1	-
5	526818102	SCREW ITXSCM	2	-
6	590260301	STATOR ASSY	1	-
7	588168603	FOIL ELEMENT	1	-
8	590688301	THERMOSTAT ASSY	1	-
9	582014902	HANDLE SYSTEM	1	-
10	503222401	LOCK NUT	1	-
11	590201901	CONTACT PLATE	1	-
12	537252501	CONTACT PLATE	1	-
13	595303401	ANTIVIBRATION ELEMENT	1	-
14	525755101	SCREW ITXSCFM	1	-
15	596201401	PROTECTION	1	-
16	590201801	COVER	1	-
17	578776102	SCREW ITXPANT	1	-
18	525798103	SCREW ITXSCFT	2	-
19	525798101	SCREW ITXSCFT	2	-
20	537088301	GROMMET	1	-
21	581143101	SCREW ITXSCFM	2	-
22	589550704	FILTER HOLDER ASSY *Blue*	1	-
23	525619001	SEALING	1	-
24	525619201	SEALING	1	-

Ref.	Article N.	Description	Qty	Kit
25	731231401	HEXAGON NUT	1	-
26	510017202	CHOKE CONTROL ASSY	1	-
27	505156201	SCREW	1	-

HEATED HANDLE

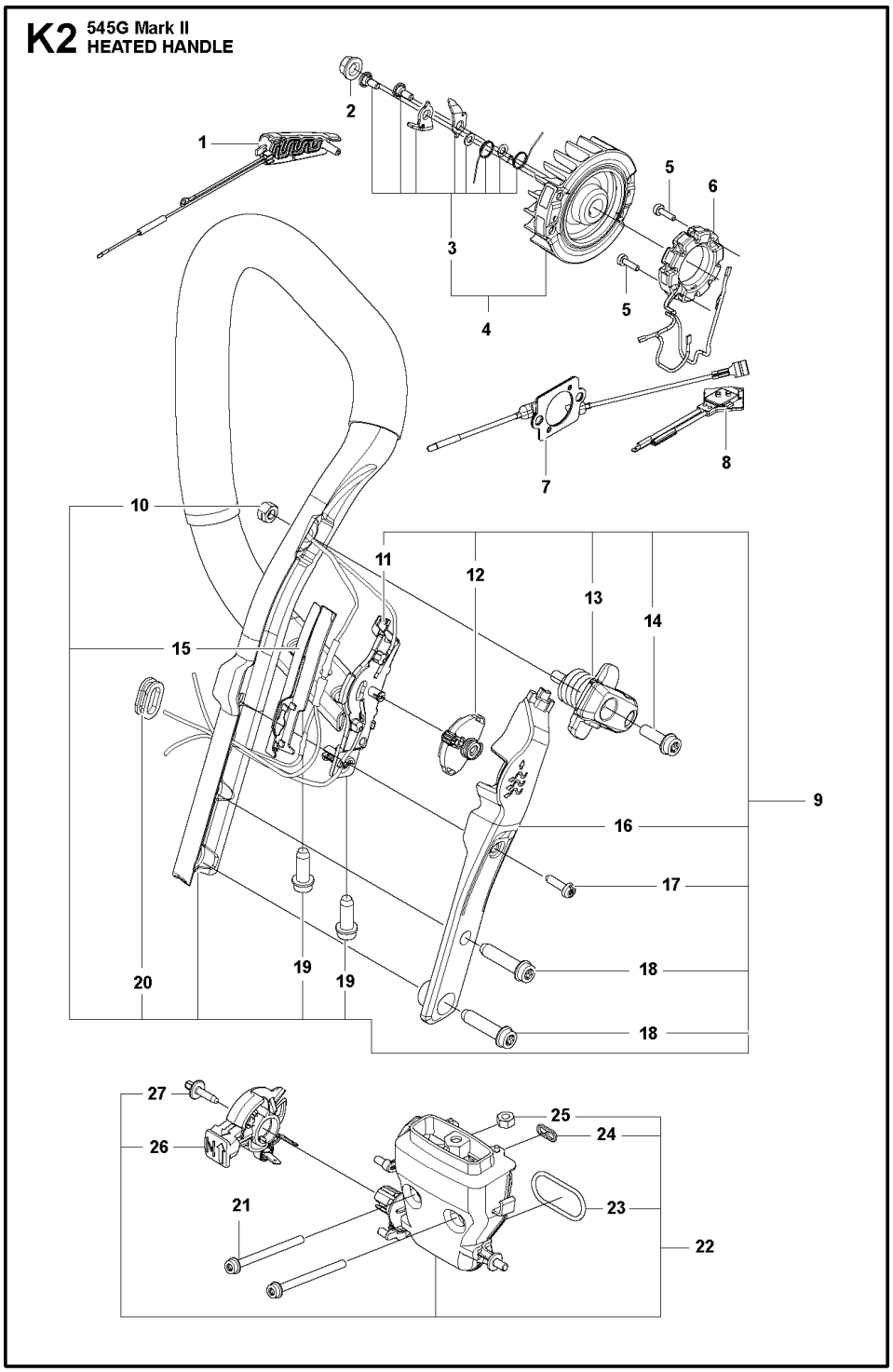

Ref.	Article N.	Description	Qty	Kit
1	503558511	TOOL -	1	-
2	522521101	COMBINATION WRENCH -	1	-
3	502215801	WRENCH -	1	-

Ref.	Article N.	Description	Qty	Kit
4	503558602	SPANNER -	1	-
5	575880701	WRENCH -	1	-
6	503621201	GREASE -	1	-
7	501911401	GREASE GUN -	1	-
8	583897101	DIAGNOSTIC TOOL KIT -	1	-
9	576183401	CABLE ASSY -	1	-
10	576952201	CABLE ASSY -	1	-
11	595967601	WINTER KIT -	1	-
12	740420100	O-RING -	2	-
13	503217016	SCREW CCRPANT -	1	-
14	594745301	BUMPER -	1	-
1	525824401	SCREW ITXSCM	1	-
2	526221801	SCREW CITXPANT	1	-
3	589584501	INSULATION WALL	1	-
4	593784901	INLET PIPE ASSY	1	-
5	503226503	SQUARE NUT	2	-
6	585195001	SUPPORT SLEEVE	1	-
7	589340601	RETAINER	1	-
8	547842601	CARBURETTOR KIT *AT-15C*	1	-
9	526818101	SCREW ITXSCM	4	-
10	536549601	SEALING *From s/n 20240911609 -*	1	-
11	540054901	PURGE *From s/n 20240911609 -*	1	-
12	505156201	SCREW	1	-
13	510017202	CHOKE CONTROL ASSY	1	-
14	523056801	FUEL HOSE	1	-
15	589340701	CONTACT CLAMP	1	-
16	577536402	WIRING ASSY	1	-

Ref.	Article N.	Description	Qty	Kit
17	590458801	AIR FILTER *Nylon Mesh - 64 Micron Rating - Black*	1	-
17	590458802	AIR FILTER *Nylon Mesh - 25 Micron Rating - Yellow*	1	-
17	590458803	AIR FILTER ASSY *Non-Woven - Clear*	1	-
18	525344303	FUEL HOSE	1	-
19	731231401	HEXAGON NUT	1	-
20	525619201	SEALING	1	-
21	581143101	SCREW ITXSCFM	2	-
22	589550703	FILTER HOLDER ASSY *Black*	1	-
23	525619001	SEALING	1	-
24	547549201	PURGE *- up to s/n 20240911608, Sealing and purge*	1	-
1	547842601	CARBURETTOR KIT *AT-15C*	1	-
2	582366201	REPAIR KIT	1	-
3	582366401	GASKET KIT	1	-
4	596969201	GASKET KIT	1	-
1	591083601	HAND GUARD	1	-
2	596218201	SCREW KIT	1	-
3	503751801	PIN	1	-
4	596218101	KNEE JOINT ASSY	1	-
5	505199502	BRAKE BAND ASSY	1	-
6	501846104	CLUTCH COVER ASSY	1	-
7	505201601	GUARD	1	-
8	505199703	COVER	1	-
9	526221801	SCREW CITXPANT	5	-
10	592975201	CHAIN GUIDE	1	-
11	505199801	CHAIN GUIDE	1	-
12	575260404	CHAIN TENSIONER KIT	1	-
13	740480702	O-RING	1	-
14	503230063	WASHER	1	-
15	537017401	BEARING SLEEVE	1	-
16	505197301	NUT	2	-
1	577518202	CLUTCH ASSY	1	-
2	597645401	CLUTCH SPRING	2	-
3	596218303	CLUTCH DRUM ASSY	1	-
4	501457402	RIM SPROCKET	1	-

Ref.	Article N.	Description	Qty	Kit
5	599531501	NEEDLE BEARING	1	-
6	582814001	WORM WHEEL	1	-
7	505199911	OIL PUMP ASSY	1	-
8	503624901	SEALING PLUG	1	-
9	505200204	PUMP PISTON	1	-
10	503230060	WASHER	2	-
11	503891601	SPRING	1	-
12	720123300	PARALLEL PIN	2	-
13	505200101	PUMP CYLINDER	1	-
14	505200402	OIL HOSE	1	-
15	504710003	OIL PLUMMET	1	-
16	526818101	SCREW ITXSCM	2	-
17	505157001	ADJUSTMENT SCREW	1	-
18	721116430	GROOVED PIN	1	-
19	503891501	SPRING	1	-
20	505200301	CASING	1	-
1	575885703	SCREW ITXSCFM	3	-
2	503869301	SUPPORT	2	-
3	544331601	GUIDE PIN	1	-
4	582285201	CARBURETTOR AREA BASE	1	-
5	522620003	TANK CAP ASSY	1	-
6	503578901	HOLDER	1	-
7	589241101	GASKET	1	-
8	595303003	SNAP LOCKING	1	-
9	595897705	CRANKCASE KIT	1	-
10	503751801	PIN	1	-
11	596351401	CATCH	1	-
12	596351301	SPIKE	1	-
13	575793501	SCREW ITXPANM	2	-
14	581559201	BELLOWS	1	-
15	525887401	SCREW CITXPANT	1	-
16	525798103	SCREW ITXSCFT	1	-
17	537377902	CHAIN CATCHER	1	-
18	589721901	CHAIN GUIDE PLATE	1	-
19	537403501	FILTER	1	-
20	530026119	CHECK VALVE	1	-
21	505125801	DEFLECTION LIMITER	1	-
22	505217301	BAR BOLT	2	-

Ref.	Article N.	Description	Qty	Kit
23	720126952	PARALLEL PIN	2	-
24	589331301	SLEEVE	2	-
25	503215325	SCREW ITXSCM	6	-
26	582285901	AIR NOZZLE	1	-
27	526818101	SCREW ITXSCM	1	-
28	525824401	SCREW ITXSCM	1	-
29	501270802	GUIDE BUSHING	2	-
30	595897601	GASKET KIT	1	-
31	596911301	PROTECTIVE CAP *- up to s/n 20224908629*	1	-
1	596218502	CRANKSHAFT KIT	1	-
1	596218504	CRANKSHAFT KIT	1	-
2	501103101	NEEDLE BEARING	1	-
3	536789801	BALL BEARING	1	-
4	597576101	RADIAL SEAL *For SKF Ball bearing 5254342-XX*	1	-
4	536958201	RADIAL SEAL *For HQV Ball bearing 536789801*	1	-
1	591493401	CYLINDER COVER -	1	-
1	574519601	SPARK PLUG	1	-
2	590330508	CYLINDER KIT	1	-
3	525824907	SCREW ITXSCM	4	-
4	576717602	SLEEVE	4	-
5	591177401	GASKET	1	-
6	582702801	PISTON RING	1	-
7	582645602	PISTON ASSY	1	-
8	737441000	SNAP RING	2	-
9	501103101	NEEDLE BEARING	1	-
10	595897601	GASKET KIT	1	-
1	522620003	TANK CAP ASSY	1	-
2	589241101	GASKET	1	-
3	503578901	HOLDER	1	-
4	596550001	THROTTLE CABLE ASSY	1	-
5	596882002	ANTIVIBRATION ELEMENT	1	-
6	720182520	PARALLEL PIN	1	-
7	501007601	SUPPORT	1	-
8	590377401	ANTIVIBRATION ELEMENT	1	-
9	523085501	DEFLECTION LIMITER	1	-

Ref.	Article N.	Description	Qty	Kit
10	501152901	TANK VENT ASSY	1	-
11	529578202	FUEL HOSE ASSY *With magnet*	1	-
12	503443203	FUEL FILTER *18-40 µm (Blue)*	1	-
12	503443205	FUEL FILTER *18-40 µm (Blue) Mega pack (100 pcs)*	1	-
13	544099801	THROTTLE LOCKOUT	1	-
14	544099901	SPRING	1	-
15	505157701	THROTTLE	1	-
16	504106301	HANDLE INSERT	1	-
17	525887402	SCREW CITXPANT	1	-
18	596554002	FUEL TANK KIT	1	-
19	582794105	LABEL	1	-
1	582014901	HANDLE SYSTEM -	1	-
2	525798103	SCREW ITXSCFT -	2	-
3	525798101	SCREW ITXSCFT -	2	-
4	525755101	SCREW ITXSCFM -	1	-
5	595303401	ANTIVIBRATION ELEMENT -	1	-
6	503222401	LOCK NUT -	1	-
1	582777303	IGNITION MODULE ASSY -	1	-
2	596352901	CAP ASSY -	1	-
3	525755102	SCREW ITXSCFM -	2	-
4	503220401	NUT -	1	-
5	596230601	SCREW KIT -	1	-
6	522937805	FLYWHEEL ASSY -	1	-
1	583798701	MUFFLER KIT -	1	-
2	583799301	SPARK ARRESTER -	1	-

Ref.	Article N.	Description	Qty	Kit
3	501515402	SUPPORT -	1	-
4	724128759	SCREW CRPANM -	1	-
5	525825107	SCREW ITXSCM -	2	-
6	583799001	HEAT DEFLECTOR -	1	-
7	583798801	MUFFLER GASKET -	1	-
8	595897601	GASKET KIT -	1	-
9	582885501	SCREW -	2	-
1	531114506	SHORT BLOCK	1	-
1	582866901	COOLING AIR CONDUCTOR -	1	-
2	576356601	SCREW ITXSCT -	1	-
3	582650702	STARTER PULLEY -	1	-
4	505305125	STARTER ROPE -	1	-
5	525887401	SCREW CITXPANT -	2	-
6	505157902	SPRING CASSETTE ASSY -	1	-
7	596230301	STARTER ASSY -	1	-
8	525824501	SCREW CITXPANMO -	4	-
9	582503401	STARTER HOUSING -	1	-
10	537283201	SLEEVE -	1	-
11	537232501	STARTER HANDLE -	1	-
12	590613403	LABEL *545*	1	-
12	590613404	LABEL *545G*	1	-
1	582866901	COOLING AIR CONDUCTOR	1	-
2	576356601	SCREW ITXSCT	1	-

Ref.	Article N.	Description	Qty	Kit
4	503858902	STARTER ROPE	1	-
5	525887401	SCREW CITXPANT	2	-
6	505157902	SPRING CASSETTE ASSY	1	-
7	596230502	STARTER ASSY	1	-
8	525824501	SCREW CITXPANMO	4	-
9	582503401	STARTER HOUSING	1	-
10	537283201	SLEEVE	1	-
11	537232501	STARTER HANDLE	1	-
12	590613403	LABEL *545*	1	-
12	590613404	LABEL *545G*	1	-
13	582644902	TORSION SPRING	1	-
15	599289202	STARTER PULLEY	1	-
1	590260901	HANDLE INSERT	1	-
2	503220401	NUT	1	-
3	596230601	SCREW KIT	1	-
4	522937806	FLYWHEEL ASSY	1	-
5	526818102	SCREW ITXSCM	2	-
6	590260301	STATOR ASSY	1	-
7	588168603	FOIL ELEMENT	1	-
8	590688301	THERMOSTAT ASSY	1	-
9	582014902	HANDLE SYSTEM	1	-
10	503222401	LOCK NUT	1	-
11	590201901	CONTACT PLATE	1	-
12	537252501	CONTACT PLATE	1	-
13	595303401	ANTIVIBRATION ELEMENT	1	-
14	525755101	SCREW ITXSCFM	1	-
15	596201401	PROTECTION	1	-
16	590201801	COVER	1	-
17	578776102	SCREW ITXPANT	1	-
18	525798103	SCREW ITXSCFT	2	-
19	525798101	SCREW ITXSCFT	2	-
20	537088301	GROMMET	1	-
21	581143101	SCREW ITXSCFM	2	-
22	589550704	FILTER HOLDER ASSY *Blue*	1	-
23	525619001	SEALING	1	-
24	525619201	SEALING	1	-

Ref.	Article N.	Description	Qty	Kit
25	731231401	HEXAGON NUT	1	-
26	510017202	CHOKE CONTROL ASSY	1	-
27	505156201	SCREW	1	-