Product Catalog: Husqvarna/555

ACCESSORIES

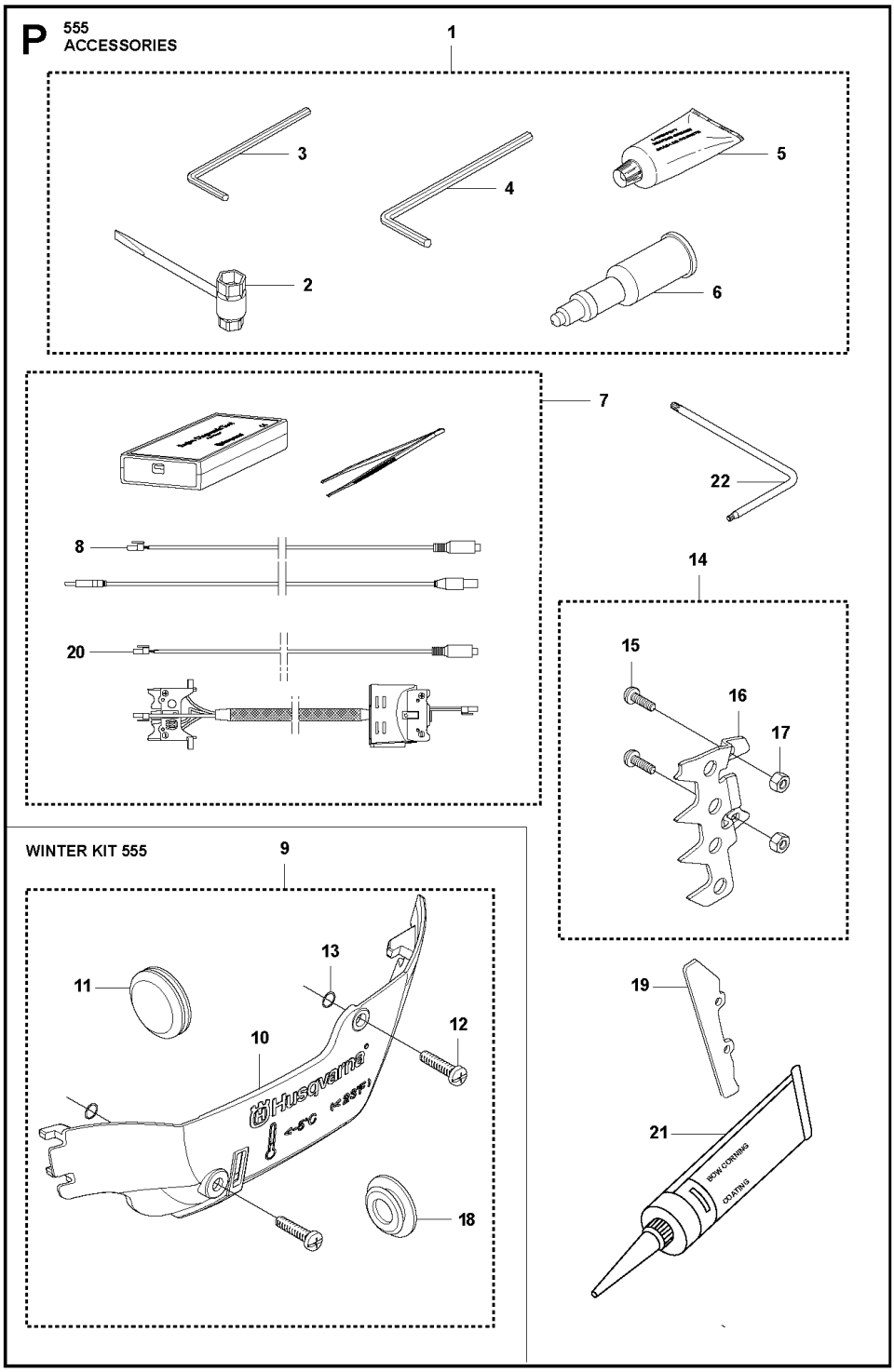

Ref.	Article N.	Description	Qty	Kit
1	575439201	TOOL -	1	-
2	522521101	COMBINATION WRENCH -	1	-
3	503558601	SPANNER -	1	-
4	503558602	SPANNER -	1	-
5	503621201	GREASE -	1	-
6	501911401	GREASE GUN -	1	-
7	583897101	DIAGNOSTIC TOOL KIT -	1	-
8	576183401	CABLE ASSY *Diagnostics cable 14 Mhz*	1	-
9	522986502	WINTER KIT -	1	-
10	505166101	WINTER COVER -	1	-
11	503405901	WINTER PLUG -	1	-
12	503217016	SCREW CCRPANT -	2	-
13	740420100	O-RING -	2	-
14	577014003	SPIKE OUTER -	1	-
15	575793501	SCREW ITXPANM -	2	-
16	577962501	SPIKE OUTER -	1	-
17	503222401	LOCK NUT -	2	-
18	578125501	WINTER PLUG -	1	-
19	574889801	ENCLOSED KIT -	1	-
20	576952201	CABLE ASSY *Diagnostics cable 8 MHz*	1	-
21	503267201	GLUE -	1	-
22	575880701	WRENCH	1	-

Ref.	Article N.	Description	Qty	Kit
		-		
1	505126304	AIR FILTER ASSY *NYLON 80 µm Black s/n up to - 20202699999*	1	-
1	505126305	AIR FILTER ASSY *NYLON 44 µm Yellow s/n up to - 20202699999*	1	-
1	505126306	AIR FILTER ASSY *FELT White s/n up to - 20202699999*	1	-
1	505126307	AIR FILTER *NYLON 25 µm Orange s/n up to - 20202699999*	1	-
1	590458801	AIR FILTER *NYLON 64 µm Black s/n from 20202700001 -*	1	-
1	590458802	AIR FILTER *NYLON 25 µm Yellow s/n from 20202700001 -*	1	-
1	590458803	AIR FILTER ASSY *Non Woven Nature s/n from 20202700001 -*	1	-
2	525397905	FILTER HOLDER ASSY *s/n up to - 20202699999*	1	-
2	597275501	FILTER HOLDER ASSY *s/n from 20202700001 -*	1	-
3	505176901	SHACKLE *s/n up to - 20202699999*	1	-
4	510017202	CHOKE CONTROL ASSY	1	-
5	505156201	SCREW	1	-
6	525588101	SEALING	1	-
7	503936601	PURGE	1	-
8	574353503	SCREW ITXSCM	2	-
9	525344303	FUEL HOSE *s/n from 20173800688*	1	-
9	589357101	VENTILATING HOSE *s/n up to - 20154500384*	1	-
9	587645404	VENTILATING HOSE *s/n from 20154500385*	1	-
10	579194101	CARBURETTOR *s/n up to - 20121499999 (ZAMA EL44)*	1	-
10	501463308	CARBURETTOR KIT *From s/n 20121500001-*	1	-
11	526818101	SCREW ITXSCM	4	-
12	505165202	FLANGE	1	-
13	503226503	SQUARE NUT	2	-
14	583964103	INLET PIPE	1	-
14	583964104	INLET PIPE *Cold resistant*	1	-

Ref.	Article N.	Description	Qty	Kit
15	520290901	INTERMEDIATE WALL	1	-
16	525619201	SEALING	1	-
17	525619001	SEALING	1	-
18	523056801	FUEL HOSE	1	-
20	577536401	WIRING ASSY *s/n from 20121500001 -*	1	-
21	582025101	SUPPORT SLEEVE	1	-
22	598934501	FILTER UNIT	1	-
23	731231401	HEXAGON NUT *s/n from 20202700001 -*	1	-
1	598934701	FILTER UNIT	1	-
1	579194101	CARBURETTOR *s/n up to - 20121499999 (ZAMA EL44)*	1	-
1	501463308	CARBURETTOR KIT	1	-
4	522517401	DIAPHRAGM	1	-
5	522517501	GASKET	1	-
6	503479701	VALVE	1	-
7	503665901	LEVER	1	-
8	537383401	SPRING	1	-
12	576414201	MAIN NOZZLE	1	-
17	503481801	SCREW	3	-
21	522517801	THROTTLE LEVER	1	-
26	503535701	STRAINER	1	-
27	537383101	DIAPHRAGM PUMP	1	-
28	537403301	DIAPHRAGM	1	-
29	537020101	GASKET	1	-
32	503479001	SCREW	1	-
46	537177001	VALVE	1	-
50	522518901	GASKET KIT *B=set of gaskets*	1	-
51	582025101	SUPPORT SLEEVE	1	-
1	505200902	HAND GUARD	1	-
2	526834501	SCREW	2	-
3	577780201	BUSHING	2	-
4	505197301	NUT	2	-
5	501846104	CLUTCH COVER ASSY	1	-
6	503751801	PIN	1	-
7	526221801	SCREW CITXPANT	5	-
8	505199301	KNEE JOINT ASSY	1	-

Ref.	Article N.	Description	Qty	Kit
9	503908301	BRAKE SPRING	1	-
10	505199502	BRAKE BAND ASSY	1	-
11	505201601	GUARD	1	-
12	505199703	COVER	1	-
14	523058001	LABEL *- up to s/n 20202399999*	1	-
15	575260404	CHAIN TENSIONER KIT	1	-
16	740480702	O-RING	1	-
17	503230063	WASHER	1	-
20	537017401	BEARING SLEEVE	1	-
22	505199801	CHAIN GUIDE	1	-
1	589809002	CLUTCH ASSY	1	-
2	502164701	CLUTCH SPRING *s/n from 20164100193 -*	3	-
2	580653502	CLUTCH SPRING *s/n from 20132500001 - up to s/n 20164100192*	3	-
3	575261005	CLUTCH DRUM ASSY *- up to s/n 20202200048 .325 x7*	1	-
3	575261006	CLUTCH DRUM *- up to s/n 20202200048 3/8 x7*	1	-
3	575261009	CLUTCH DRUM ASSY	1	-
3	575261010	CLUTCH DRUM ASSY	1	-
4	501457402	RIM SPROCKET *.325x7*	1	-
4	501598002	RIM SPROCKET *3/8x7*	1	-
5	503253401	NEEDLE BEARING	1	-
6	505200801	WORM WHEEL *- up to s/n 20202200048*	1	-
6	586201701	WORM WHEEL *s/n from 20202200049 - .325*	1	-
6	587633001	WORM WHEEL *s/n from 20202200049 - 3/8*	1	-
7	505199908	OIL PUMP ASSY	1	-
8	505200202	PUMP PISTON	1	-
9	505200301	CASING	1	-
10	503230060	WASHER	2	-
11	503891601	SPRING	1	-
12	505157001	ADJUSTMENT SCREW	1	-
14	526818102	SCREW ITXSCM	2	-
15	505200402	OIL HOSE	1	-

Ref.	Article N.	Description	Qty	Kit
16	504710003	OIL PLUMMET	1	-
17	720123300	PARALLEL PIN	2	-
18	503891501	SPRING	1	-
19	505200101	PUMP CYLINDER	1	-
20	503624902	SEALING PLUG	1	-
21	598937705	CLUTCH DRUM ASSY	1	-
21	598937707	CLUTCH DRUM ASSY	1	-
1	588193901	CARBURETTOR AREA BASE	1	-
2	525755202	SCREW ITXSCFM	4	-
3	503869301	SUPPORT	2	-
4	581559201	BELLOWS	1	-
5	575380224	CRANKCASE ASSY	1	-
6	505201101	CHAIN GUIDE PLATE	1	-
7	575793501	SCREW ITXPANM	2	-
8	537403501	FILTER	1	-
9	530026119	CHECK VALVE	1	-
10	537210701	SPRING GUIDE	1	-
11	503436501	POSITION SPRING	1	-
12	505201201	CATCH	1	-
13	503751801	PIN	1	-
14	593806001	GUIDE BUSHING	2	-
15	505217301	BAR BOLT	2	-
16	525824401	SCREW ITXSCM	2	-
17	575841104	SCREW ITXSCM	6	-
19	577935201	SPIKE	1	-
20	537377902	CHAIN CATCHER	1	-
21	525798103	SCREW ITXSCFT	1	-
22	505125801	DEFLECTION LIMITER	1	-
23	595303003	SNAP LOCKING	1	-
24	588065501	AIR NOZZLE	1	-
25	526818101	SCREW ITXSCM	1	-
26	522620003	TANK CAP ASSY	1	-
27	589241101	GASKET	1	-
28	503578901	HOLDER	1	-
29	525391201	RADIAL SEAL *- up to s/n 20202399999*	1	-
30	525887401	SCREW CITXPANT	1	-
31	575270003	GASKET KIT *A=set of gaskets*	1	-

Ref.	Article N.	Description	Qty	Kit
32	574889801	ENCLOSED KIT	1	-
33	596911301	PROTECTIVE CAP *- up to s/n 20224908629*	1	-
1	575545214	CRANKSHAFT ASSY *- up to s/n 20202399999*	1	-
2	505133505	BALL BEARING	1	-
3	525434204	BALL BEARING	1	-
4	503256302	NEEDLE BEARING	1	-
5	525391201	RADIAL SEAL *- up to s/n 20202399999*	1	-
6	505416101	RADIAL SEAL	1	-
7	575545218	CRANKSHAFT ASSY *s/n from 20202400001 -*	1	-
1	587248504	CYLINDER COVER ASSY *s/n up to - 20202699999*	1	-
2	587149501	LABEL -	1	-
3	587248703	CYLINDER COVER ASSY -	1	-
1	531008615	SPARK PLUG -	1	-
2	582392701	SCREW -	4	-
3	575276901	DECOMPRESSION VALVE -	1	-
4	503552201	PLUG -	1	-
5	576717602	SLEEVE -	4	-
6	510164901	GASKET -	1	-
7	575355806	CYLINDER ASSY -	1	-
8	584807806	PISTON ASSY -	1	-
9	505215701	PISTON RING -	1	-
10	737441000	SNAP RING -	2	-
11	503256302	NEEDLE BEARING -	1	-
12	575270003	GASKET KIT	1	-

Ref.	Article N.	Description	Qty	Kit
		A=set of gaskets		
13	520291101	BUSHING -	1	-
1	525887402	SCREW CITXPANT	1	-
2	504106301	HANDLE INSERT	1	-
4	575382205	FUEL TANK ASSY	1	-
5	501152901	TANK VENT ASSY	1	-
6	544099801	THROTTLE LOCKOUT	1	-
7	544099901	SPRING	1	-
8	505157701	THROTTLE	1	-
9	720182520	PARALLEL PIN	1	-
10	521887901	THROTTLE CABLE ASSY	1	-
11	525798103	SCREW ITXSCFT	1	-
12	573993503	FUEL HOSE	1	-
13	503443203	FUEL FILTER *18-40 µm (Blue)*	1	-
14	505165901	COVER	1	-
15	586312103	ANTIVIBRATION ELEMENT	1	-
16	505128702	ANTIVIBRATION ELEMENT	1	-
17	523085501	DEFLECTION LIMITER	1	-
18	501007601	SUPPORT	1	-
19	522620003	TANK CAP ASSY	1	-
20	589241101	GASKET	1	-
21	503578901	HOLDER	1	-
22	525798103	SCREW ITXSCFT	1	-
23	577844301	DECAL	1	-
24	529578202	FUEL HOSE ASSY *From s/n 20161000481 - with magnet*	1	-
1	575388905	FRONT HANDLE	1	-
2	525798103	SCREW ITXSCFT	2	-
3	525798101	SCREW ITXSCFT	3	-
4	505129705	ANTIVIBRATION ELEMENT	1	-
1	581914802	MUFFLER KIT -	1	-
2	724128759	SCREW CRPANM -	1	-
3	505171301	SPARK ARRESTER -	1	-
4	525825106	SCREW ITXSCM *s/n from 20132500001 -*	2	-

Ref.	Article N.	Description	Qty	Kit
5	577656301	SLEEVE *s/n up to - 20132499999*	2	-
6	581918501	GASKET -	1	-
7	585178701	HEAT DEFLECTOR -	1	-
8	577902201	WASHER *s/n up to - 20132499999*	2	-
9	525762501	SCREW ITXSCM -	2	-
10	575270003	GASKET KIT *A=set of gaskets*	1	-
11	725537655	SCREW IHSCM *s/n up to - 20132499999*	2	-
1	505157501	AIR CONDUCTOR -	1	-
2	505159207	STARTER ASSY -	1	-
3	537232501	STARTER HANDLE -	1	-
4	505305125	STARTER ROPE -	1	-
5	576356601	SCREW ITXSCT -	1	-
6	537283201	SLEEVE -	1	-
7	505158101	STARTER PULLEY ASSY -	1	-
8	525887401	SCREW CITXPANT -	2	-
9	598750301	SPRING CASSETTE ASSY -	1	-
10	525824501	SCREW CITXPANMO -	4	-
11	505159102	STARTER HOUSING -	1	-
12	523035601	LABEL -	1	-
1	522795107	IGNITION MODULE ASSY *s/n up to - 20121499999 (14MHz)*	1	-
1	596214001	IGNITION MODULE *s/n from 20121500001 - (8MHz)*	1	-
2	501485404	SPARK PLUG CAP ASSY	1	-

Ref.	Article N.	Description	Qty	Kit
3	525755203	SCREW ITXSCFM	2	-
4	575430601	WIRING ASSY *s/n up to - 20121499999 (14MHz)*	1	-
4	577967601	WIRING ASSY *s/n from 20121500001 - (8MHz)*	1	-
5	505178201	CABLE HOLDER	1	-
6	585321801	NUT	1	-
7	504872403	FLYWHEEL ASSY	1	-
8	503230042	WASHER	2	-
9	501673501	SPRING	2	-
10	501673201	PAWL	2	-
11	506006901	SCREW	2	-
12	504043505	CABLE COVER	1	-
13	503238501	SHRINKAGE HOSE	2	-
14	525887401	SCREW CITXPANT	1	-

CARBURETOR AND AIR FILTER

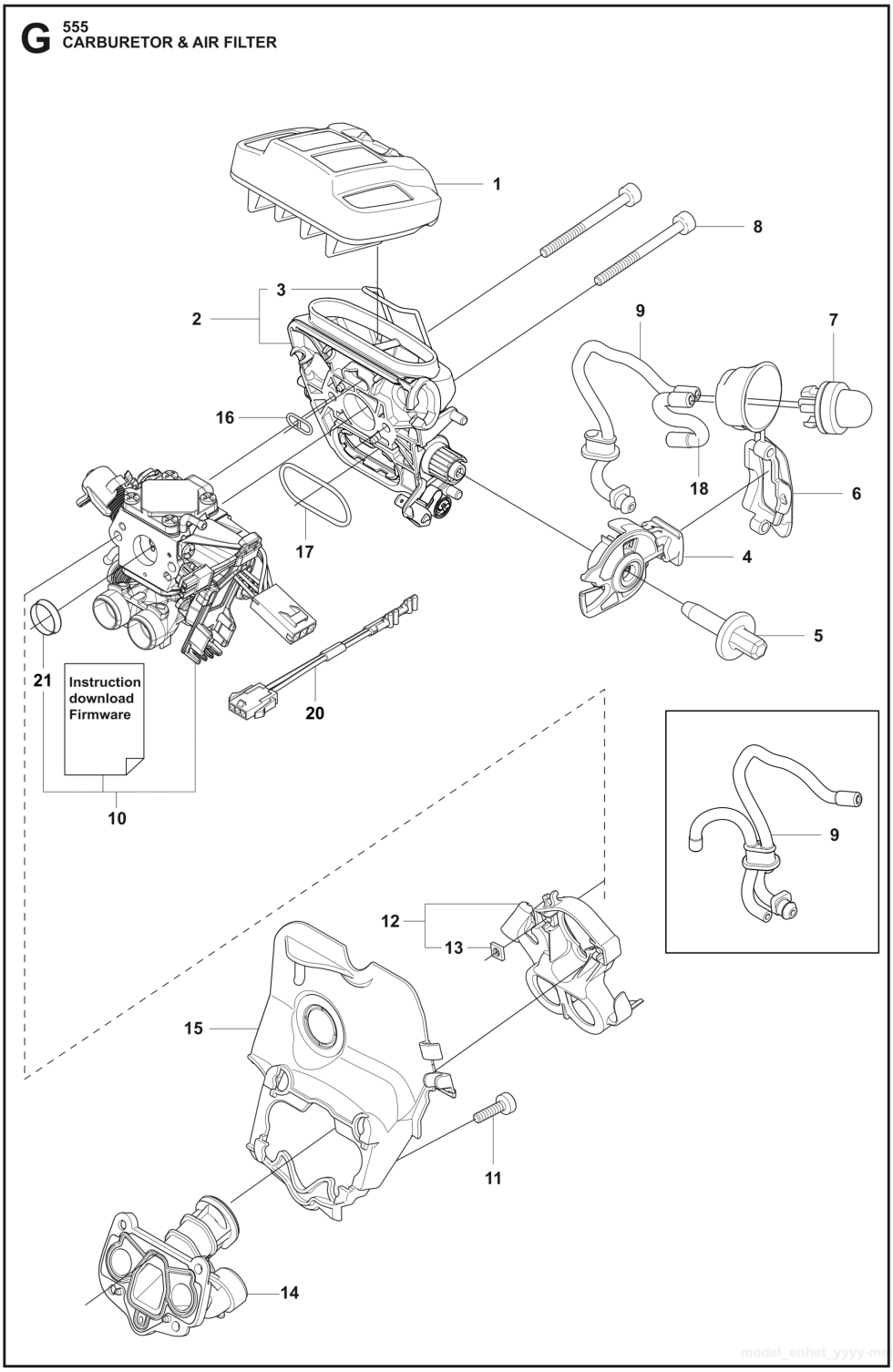

Ref.	Article N.	Description	Qty	Kit
1	575439201	TOOL -	1	-
2	522521101	COMBINATION WRENCH -	1	-
3	503558601	SPANNER -	1	-

Ref.	Article N.	Description	Qty	Kit
4	503558602	SPANNER -	1	-
5	503621201	GREASE -	1	-
6	501911401	GREASE GUN -	1	-
7	583897101	DIAGNOSTIC TOOL KIT -	1	-
8	576183401	CABLE ASSY *Diagnostics cable 14 Mhz*	1	-
9	522986502	WINTER KIT -	1	-
10	505166101	WINTER COVER -	1	-
11	503405901	WINTER PLUG -	1	-
12	503217016	SCREW CCRPANT -	2	-
13	740420100	O-RING -	2	-
14	577014003	SPIKE OUTER -	1	-
15	575793501	SCREW ITXPANM -	2	-
16	577962501	SPIKE OUTER -	1	-
17	503222401	LOCK NUT -	2	-
18	578125501	WINTER PLUG -	1	-
19	574889801	ENCLOSED KIT -	1	-
20	576952201	CABLE ASSY *Diagnostics cable 8 MHz*	1	-
21	503267201	GLUE -	1	-
22	575880701	WRENCH -	1	-
1	505126304	AIR FILTER ASSY *NYLON 80 µm Black s/n up to - 20202699999*	1	-
1	505126305	AIR FILTER ASSY *NYLON 44 µm Yellow s/n up to - 20202699999*	1	-
1	505126306	AIR FILTER ASSY	1	-

Ref.	Article N.	Description	Qty	Kit
		FELT White s/n up to - 20202699999		
1	505126307	AIR FILTER *NYLON 25 µm Orange s/n up to - 20202699999*	1	-
1	590458801	AIR FILTER *NYLON 64 µm Black s/n from 20202700001 -*	1	-
1	590458802	AIR FILTER *NYLON 25 µm Yellow s/n from 20202700001 -*	1	-
1	590458803	AIR FILTER ASSY *Non Woven Nature s/n from 20202700001 -*	1	-
2	525397905	FILTER HOLDER ASSY *s/n up to - 20202699999*	1	-
2	597275501	FILTER HOLDER ASSY *s/n from 20202700001 -*	1	-
3	505176901	SHACKLE *s/n up to - 20202699999*	1	-
4	510017202	CHOKE CONTROL ASSY	1	-
5	505156201	SCREW	1	-
6	525588101	SEALING	1	-
7	503936601	PURGE	1	-
8	574353503	SCREW ITXSCM	2	-
9	525344303	FUEL HOSE *s/n from 20173800688*	1	-
9	589357101	VENTILATING HOSE *s/n up to - 20154500384*	1	-
9	587645404	VENTILATING HOSE *s/n from 20154500385*	1	-
10	579194101	CARBURETTOR *s/n up to - 20121499999 (ZAMA EL44)*	1	-
10	501463308	CARBURETTOR KIT *From s/n 20121500001-*	1	-
11	526818101	SCREW ITXSCM	4	-
12	505165202	FLANGE	1	-
13	503226503	SQUARE NUT	2	-
14	583964103	INLET PIPE	1	-
14	583964104	INLET PIPE *Cold resistant*	1	-
15	520290901	INTERMEDIATE WALL	1	-
16	525619201	SEALING	1	-
17	525619001	SEALING	1	-
18	523056801	FUEL HOSE	1	-

Ref.	Article N.	Description	Qty	Kit
20	577536401	WIRING ASSY *s/n from 20121500001 -*	1	-
21	582025101	SUPPORT SLEEVE	1	-
22	598934501	FILTER UNIT	1	-
23	731231401	HEXAGON NUT *s/n from 20202700001 -*	1	-
1	598934701	FILTER UNIT	1	-
1	579194101	CARBURETTOR *s/n up to - 20121499999 (ZAMA EL44)*	1	-
1	501463308	CARBURETTOR KIT	1	-
4	522517401	DIAPHRAGM	1	-
5	522517501	GASKET	1	-
6	503479701	VALVE	1	-
7	503665901	LEVER	1	-
8	537383401	SPRING	1	-
12	576414201	MAIN NOZZLE	1	-
17	503481801	SCREW	3	-
21	522517801	THROTTLE LEVER	1	-
26	503535701	STRAINER	1	-
27	537383101	DIAPHRAGM PUMP	1	-
28	537403301	DIAPHRAGM	1	-
29	537020101	GASKET	1	-
32	503479001	SCREW	1	-
46	537177001	VALVE	1	-
50	522518901	GASKET KIT *B=set of gaskets*	1	-
51	582025101	SUPPORT SLEEVE	1	-
1	505200902	HAND GUARD	1	-
2	526834501	SCREW	2	-
3	577780201	BUSHING	2	-
4	505197301	NUT	2	-
5	501846104	CLUTCH COVER ASSY	1	-
6	503751801	PIN	1	-
7	526221801	SCREW CITXPANT	5	-
8	505199301	KNEE JOINT ASSY	1	-
9	503908301	BRAKE SPRING	1	-
10	505199502	BRAKE BAND ASSY	1	-
11	505201601	GUARD	1	-
12	505199703	COVER	1	-

Ref.	Article N.	Description	Qty	Kit
14	523058001	LABEL *- up to s/n 20202399999*	1	-
15	575260404	CHAIN TENSIONER KIT	1	-
16	740480702	O-RING	1	-
17	503230063	WASHER	1	-
20	537017401	BEARING SLEEVE	1	-
22	505199801	CHAIN GUIDE	1	-
1	589809002	CLUTCH ASSY	1	-
2	502164701	CLUTCH SPRING *s/n from 20164100193 -*	3	-
2	580653502	CLUTCH SPRING *s/n from 20132500001 - up to s/n 20164100192*	3	-
3	575261005	CLUTCH DRUM ASSY *- up to s/n 20202200048 .325 x7*	1	-
3	575261006	CLUTCH DRUM *- up to s/n 20202200048 3/8 x7*	1	-
3	575261009	CLUTCH DRUM ASSY	1	-
3	575261010	CLUTCH DRUM ASSY	1	-
4	501457402	RIM SPROCKET *.325x7*	1	-
4	501598002	RIM SPROCKET *3/8x7*	1	-
5	503253401	NEEDLE BEARING	1	-
6	505200801	WORM WHEEL *- up to s/n 20202200048*	1	-
6	586201701	WORM WHEEL *s/n from 20202200049 - .325*	1	-
6	587633001	WORM WHEEL *s/n from 20202200049 - 3/8*	1	-
7	505199908	OIL PUMP ASSY	1	-
8	505200202	PUMP PISTON	1	-
9	505200301	CASING	1	-
10	503230060	WASHER	2	-
11	503891601	SPRING	1	-
12	505157001	ADJUSTMENT SCREW	1	-
14	526818102	SCREW ITXSCM	2	-
15	505200402	OIL HOSE	1	-
16	504710003	OIL PLUMMET	1	-
17	720123300	PARALLEL PIN	2	-
18	503891501	SPRING	1	-
19	505200101	PUMP CYLINDER	1	-

Ref.	Article N.	Description	Qty	Kit
20	503624902	SEALING PLUG	1	-
21	598937705	CLUTCH DRUM ASSY	1	-
21	598937707	CLUTCH DRUM ASSY	1	-
1	588193901	CARBURETTOR AREA BASE	1	-
2	525755202	SCREW ITXSCFM	4	-
3	503869301	SUPPORT	2	-
4	581559201	BELLOWS	1	-
5	575380224	CRANKCASE ASSY	1	-
6	505201101	CHAIN GUIDE PLATE	1	-
7	575793501	SCREW ITXPANM	2	-
8	537403501	FILTER	1	-
9	530026119	CHECK VALVE	1	-
10	537210701	SPRING GUIDE	1	-
11	503436501	POSITION SPRING	1	-
12	505201201	CATCH	1	-
13	503751801	PIN	1	-
14	593806001	GUIDE BUSHING	2	-
15	505217301	BAR BOLT	2	-
16	525824401	SCREW ITXSCM	2	-
17	575841104	SCREW ITXSCM	6	-
19	577935201	SPIKE	1	-
20	537377902	CHAIN CATCHER	1	-
21	525798103	SCREW ITXSCFT	1	-
22	505125801	DEFLECTION LIMITER	1	-
23	595303003	SNAP LOCKING	1	-
24	588065501	AIR NOZZLE	1	-
25	526818101	SCREW ITXSCM	1	-
26	522620003	TANK CAP ASSY	1	-
27	589241101	GASKET	1	-
28	503578901	HOLDER	1	-
29	525391201	RADIAL SEAL *- up to s/n 20202399999*	1	-
30	525887401	SCREW CITXPANT	1	-
31	575270003	GASKET KIT *A=set of gaskets*	1	-
32	574889801	ENCLOSED KIT	1	-
33	596911301	PROTECTIVE CAP *- up to s/n 20224908629*	1	-
1	575545214	CRANKSHAFT ASSY	1	-

Ref.	Article N.	Description	Qty	Kit
		- up to s/n 20202399999		
2	505133505	BALL BEARING	1	-
3	525434204	BALL BEARING	1	-
4	503256302	NEEDLE BEARING	1	-
5	525391201	RADIAL SEAL *- up to s/n 20202399999*	1	-
6	505416101	RADIAL SEAL	1	-
7	575545218	CRANKSHAFT ASSY *s/n from 20202400001 -*	1	-
1	587248504	CYLINDER COVER ASSY *s/n up to - 20202699999*	1	-
2	587149501	LABEL -	1	-
3	587248703	CYLINDER COVER ASSY -	1	-
1	531008615	SPARK PLUG -	1	-
2	582392701	SCREW -	4	-
3	575276901	DECOMPRESSION VALVE -	1	-
4	503552201	PLUG -	1	-
5	576717602	SLEEVE -	4	-
6	510164901	GASKET -	1	-
7	575355806	CYLINDER ASSY -	1	-
8	584807806	PISTON ASSY -	1	-
9	505215701	PISTON RING -	1	-
10	737441000	SNAP RING -	2	-
11	503256302	NEEDLE BEARING -	1	-
12	575270003	GASKET KIT *A=set of gaskets*	1	-
13	520291101	BUSHING -	1	-
1	525887402	SCREW CITXPANT	1	-

Ref.	Article N.	Description	Qty	Kit
2	504106301	HANDLE INSERT	1	-
4	575382205	FUEL TANK ASSY	1	-
5	501152901	TANK VENT ASSY	1	-
6	544099801	THROTTLE LOCKOUT	1	-
7	544099901	SPRING	1	-
8	505157701	THROTTLE	1	-
9	720182520	PARALLEL PIN	1	-
10	521887901	THROTTLE CABLE ASSY	1	-
11	525798103	SCREW ITXSCFT	1	-
12	573993503	FUEL HOSE	1	-
13	503443203	FUEL FILTER *18-40 µm (Blue)*	1	-
14	505165901	COVER	1	-
15	586312103	ANTIVIBRATION ELEMENT	1	-
16	505128702	ANTIVIBRATION ELEMENT	1	-
17	523085501	DEFLECTION LIMITER	1	-
18	501007601	SUPPORT	1	-
19	522620003	TANK CAP ASSY	1	-
20	589241101	GASKET	1	-
21	503578901	HOLDER	1	-
22	525798103	SCREW ITXSCFT	1	-
23	577844301	DECAL	1	-
24	529578202	FUEL HOSE ASSY *From s/n 20161000481 - with magnet*	1	-
1	575388905	FRONT HANDLE	1	-
2	525798103	SCREW ITXSCFT	2	-
3	525798101	SCREW ITXSCFT	3	-
4	505129705	ANTIVIBRATION ELEMENT	1	-
1	581914802	MUFFLER KIT -	1	-
2	724128759	SCREW CRPANM -	1	-
3	505171301	SPARK ARRESTER -	1	-
4	525825106	SCREW ITXSCM *s/n from 20132500001 -*	2	-
5	577656301	SLEEVE *s/n up to - 20132499999*	2	-
6	581918501	GASKET -	1	-

Ref.	Article N.	Description	Qty	Kit
7	585178701	HEAT DEFLECTOR -	1	-
8	577902201	WASHER *s/n up to - 20132499999*	2	-
9	525762501	SCREW ITXSCM -	2	-
10	575270003	GASKET KIT *A=set of gaskets*	1	-
11	725537655	SCREW IHSCM *s/n up to - 20132499999*	2	-
1	505157501	AIR CONDUCTOR -	1	-
2	505159207	STARTER ASSY -	1	-
3	537232501	STARTER HANDLE -	1	-
4	505305125	STARTER ROPE -	1	-
5	576356601	SCREW ITXSCT -	1	-
6	537283201	SLEEVE -	1	-
7	505158101	STARTER PULLEY ASSY -	1	-
8	525887401	SCREW CITXPANT -	2	-
9	598750301	SPRING CASSETTE ASSY -	1	-
10	525824501	SCREW CITXPANMO -	4	-
11	505159102	STARTER HOUSING -	1	-
12	523035601	LABEL -	1	-
1	522795107	IGNITION MODULE ASSY *s/n up to - 20121499999 (14MHz)*	1	-
1	596214001	IGNITION MODULE *s/n from 20121500001 - (8MHz)*	1	-
2	501485404	SPARK PLUG CAP ASSY	1	-
3	525755203	SCREW ITXSCFM	2	-
4	575430601	WIRING ASSY *s/n up to - 20121499999 (14MHz)*	1	-
4	577967601	WIRING ASSY	1	-

Ref.	Article N.	Description	Qty	Kit
		s/n from 20121500001 - (8MHz)		
5	505178201	CABLE HOLDER	1	-
6	585321801	NUT	1	-
7	504872403	FLYWHEEL ASSY	1	-
8	503230042	WASHER	2	-
9	501673501	SPRING	2	-
10	501673201	PAWL	2	-
11	506006901	SCREW	2	-
12	504043505	CABLE COVER	1	-
13	503238501	SHRINKAGE HOSE	2	-
14	525887401	SCREW CITXPANT	1	-

CARBURETOR AND AIR FILTER

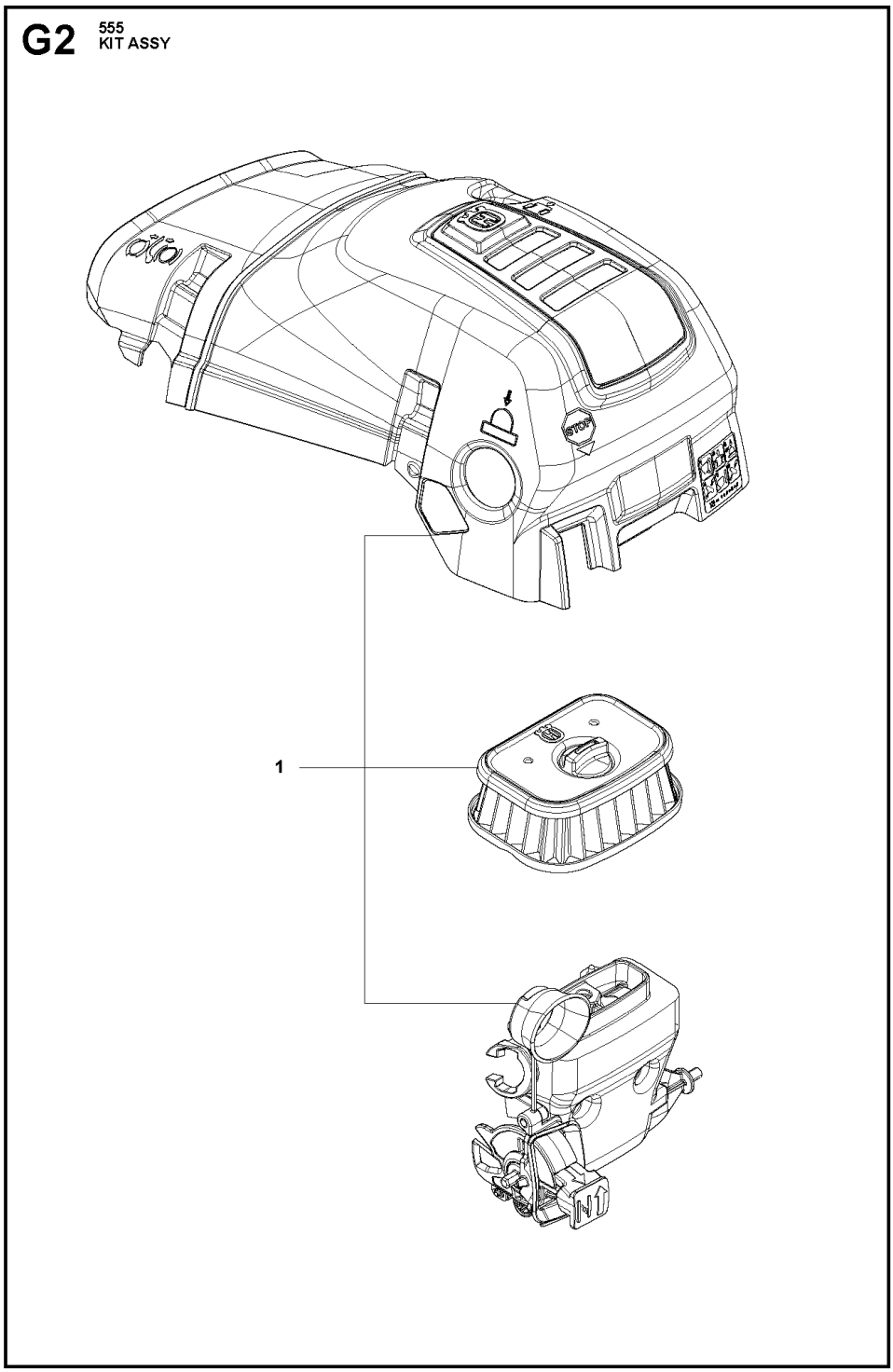

Ref.	Article N.	Description	Qty	Kit
1	575439201	TOOL -	1	-
2	522521101	COMBINATION WRENCH -	1	-
3	503558601	SPANNER -	1	-

Ref.	Article N.	Description	Qty	Kit
4	503558602	SPANNER -	1	-
5	503621201	GREASE -	1	-
6	501911401	GREASE GUN -	1	-
7	583897101	DIAGNOSTIC TOOL KIT -	1	-
8	576183401	CABLE ASSY *Diagnostics cable 14 Mhz*	1	-
9	522986502	WINTER KIT -	1	-
10	505166101	WINTER COVER -	1	-
11	503405901	WINTER PLUG -	1	-
12	503217016	SCREW CCRPANT -	2	-
13	740420100	O-RING -	2	-
14	577014003	SPIKE OUTER -	1	-
15	575793501	SCREW ITXPANM -	2	-
16	577962501	SPIKE OUTER -	1	-
17	503222401	LOCK NUT -	2	-
18	578125501	WINTER PLUG -	1	-
19	574889801	ENCLOSED KIT -	1	-
20	576952201	CABLE ASSY *Diagnostics cable 8 MHz*	1	-
21	503267201	GLUE -	1	-
22	575880701	WRENCH -	1	-
1	505126304	AIR FILTER ASSY *NYLON 80 µm Black s/n up to - 20202699999*	1	-
1	505126305	AIR FILTER ASSY *NYLON 44 µm Yellow s/n up to - 20202699999*	1	-
1	505126306	AIR FILTER ASSY	1	-

Ref.	Article N.	Description	Qty	Kit
		FELT White s/n up to - 20202699999		
1	505126307	AIR FILTER *NYLON 25 µm Orange s/n up to - 20202699999*	1	-
1	590458801	AIR FILTER *NYLON 64 µm Black s/n from 20202700001 -*	1	-
1	590458802	AIR FILTER *NYLON 25 µm Yellow s/n from 20202700001 -*	1	-
1	590458803	AIR FILTER ASSY *Non Woven Nature s/n from 20202700001 -*	1	-
2	525397905	FILTER HOLDER ASSY *s/n up to - 20202699999*	1	-
2	597275501	FILTER HOLDER ASSY *s/n from 20202700001 -*	1	-
3	505176901	SHACKLE *s/n up to - 20202699999*	1	-
4	510017202	CHOKE CONTROL ASSY	1	-
5	505156201	SCREW	1	-
6	525588101	SEALING	1	-
7	503936601	PURGE	1	-
8	574353503	SCREW ITXSCM	2	-
9	525344303	FUEL HOSE *s/n from 20173800688*	1	-
9	589357101	VENTILATING HOSE *s/n up to - 20154500384*	1	-
9	587645404	VENTILATING HOSE *s/n from 20154500385*	1	-
10	579194101	CARBURETTOR *s/n up to - 20121499999 (ZAMA EL44)*	1	-
10	501463308	CARBURETTOR KIT *From s/n 20121500001-*	1	-
11	526818101	SCREW ITXSCM	4	-
12	505165202	FLANGE	1	-
13	503226503	SQUARE NUT	2	-
14	583964103	INLET PIPE	1	-
14	583964104	INLET PIPE *Cold resistant*	1	-
15	520290901	INTERMEDIATE WALL	1	-
16	525619201	SEALING	1	-
17	525619001	SEALING	1	-
18	523056801	FUEL HOSE	1	-

Ref.	Article N.	Description	Qty	Kit
20	577536401	WIRING ASSY *s/n from 20121500001 -*	1	-
21	582025101	SUPPORT SLEEVE	1	-
22	598934501	FILTER UNIT	1	-
23	731231401	HEXAGON NUT *s/n from 20202700001 -*	1	-
1	598934701	FILTER UNIT	1	-
1	579194101	CARBURETTOR *s/n up to - 20121499999 (ZAMA EL44)*	1	-
1	501463308	CARBURETTOR KIT	1	-
4	522517401	DIAPHRAGM	1	-
5	522517501	GASKET	1	-
6	503479701	VALVE	1	-
7	503665901	LEVER	1	-
8	537383401	SPRING	1	-
12	576414201	MAIN NOZZLE	1	-
17	503481801	SCREW	3	-
21	522517801	THROTTLE LEVER	1	-
26	503535701	STRAINER	1	-
27	537383101	DIAPHRAGM PUMP	1	-
28	537403301	DIAPHRAGM	1	-
29	537020101	GASKET	1	-
32	503479001	SCREW	1	-
46	537177001	VALVE	1	-
50	522518901	GASKET KIT *B=set of gaskets*	1	-
51	582025101	SUPPORT SLEEVE	1	-
1	505200902	HAND GUARD	1	-
2	526834501	SCREW	2	-
3	577780201	BUSHING	2	-
4	505197301	NUT	2	-
5	501846104	CLUTCH COVER ASSY	1	-
6	503751801	PIN	1	-
7	526221801	SCREW CITXPANT	5	-
8	505199301	KNEE JOINT ASSY	1	-
9	503908301	BRAKE SPRING	1	-
10	505199502	BRAKE BAND ASSY	1	-
11	505201601	GUARD	1	-
12	505199703	COVER	1	-

Ref.	Article N.	Description	Qty	Kit
14	523058001	LABEL *- up to s/n 20202399999*	1	-
15	575260404	CHAIN TENSIONER KIT	1	-
16	740480702	O-RING	1	-
17	503230063	WASHER	1	-
20	537017401	BEARING SLEEVE	1	-
22	505199801	CHAIN GUIDE	1	-
1	589809002	CLUTCH ASSY	1	-
2	502164701	CLUTCH SPRING *s/n from 20164100193 -*	3	-
2	580653502	CLUTCH SPRING *s/n from 20132500001 - up to s/n 20164100192*	3	-
3	575261005	CLUTCH DRUM ASSY *- up to s/n 20202200048 .325 x7*	1	-
3	575261006	CLUTCH DRUM *- up to s/n 20202200048 3/8 x7*	1	-
3	575261009	CLUTCH DRUM ASSY	1	-
3	575261010	CLUTCH DRUM ASSY	1	-
4	501457402	RIM SPROCKET *.325x7*	1	-
4	501598002	RIM SPROCKET *3/8x7*	1	-
5	503253401	NEEDLE BEARING	1	-
6	505200801	WORM WHEEL *- up to s/n 20202200048*	1	-
6	586201701	WORM WHEEL *s/n from 20202200049 - .325*	1	-
6	587633001	WORM WHEEL *s/n from 20202200049 - 3/8*	1	-
7	505199908	OIL PUMP ASSY	1	-
8	505200202	PUMP PISTON	1	-
9	505200301	CASING	1	-
10	503230060	WASHER	2	-
11	503891601	SPRING	1	-
12	505157001	ADJUSTMENT SCREW	1	-
14	526818102	SCREW ITXSCM	2	-
15	505200402	OIL HOSE	1	-
16	504710003	OIL PLUMMET	1	-
17	720123300	PARALLEL PIN	2	-
18	503891501	SPRING	1	-
19	505200101	PUMP CYLINDER	1	-

Ref.	Article N.	Description	Qty	Kit
20	503624902	SEALING PLUG	1	-
21	598937705	CLUTCH DRUM ASSY	1	-
21	598937707	CLUTCH DRUM ASSY	1	-
1	588193901	CARBURETTOR AREA BASE	1	-
2	525755202	SCREW ITXSCFM	4	-
3	503869301	SUPPORT	2	-
4	581559201	BELLOWS	1	-
5	575380224	CRANKCASE ASSY	1	-
6	505201101	CHAIN GUIDE PLATE	1	-
7	575793501	SCREW ITXPANM	2	-
8	537403501	FILTER	1	-
9	530026119	CHECK VALVE	1	-
10	537210701	SPRING GUIDE	1	-
11	503436501	POSITION SPRING	1	-
12	505201201	CATCH	1	-
13	503751801	PIN	1	-
14	593806001	GUIDE BUSHING	2	-
15	505217301	BAR BOLT	2	-
16	525824401	SCREW ITXSCM	2	-
17	575841104	SCREW ITXSCM	6	-
19	577935201	SPIKE	1	-
20	537377902	CHAIN CATCHER	1	-
21	525798103	SCREW ITXSCFT	1	-
22	505125801	DEFLECTION LIMITER	1	-
23	595303003	SNAP LOCKING	1	-
24	588065501	AIR NOZZLE	1	-
25	526818101	SCREW ITXSCM	1	-
26	522620003	TANK CAP ASSY	1	-
27	589241101	GASKET	1	-
28	503578901	HOLDER	1	-
29	525391201	RADIAL SEAL *- up to s/n 20202399999*	1	-
30	525887401	SCREW CITXPANT	1	-
31	575270003	GASKET KIT *A=set of gaskets*	1	-
32	574889801	ENCLOSED KIT	1	-
33	596911301	PROTECTIVE CAP *- up to s/n 20224908629*	1	-
1	575545214	CRANKSHAFT ASSY	1	-

Ref.	Article N.	Description	Qty	Kit
		- up to s/n 20202399999		
2	505133505	BALL BEARING	1	-
3	525434204	BALL BEARING	1	-
4	503256302	NEEDLE BEARING	1	-
5	525391201	RADIAL SEAL *- up to s/n 20202399999*	1	-
6	505416101	RADIAL SEAL	1	-
7	575545218	CRANKSHAFT ASSY *s/n from 20202400001 -*	1	-
1	587248504	CYLINDER COVER ASSY *s/n up to - 20202699999*	1	-
2	587149501	LABEL -	1	-
3	587248703	CYLINDER COVER ASSY -	1	-
1	531008615	SPARK PLUG -	1	-
2	582392701	SCREW -	4	-
3	575276901	DECOMPRESSION VALVE -	1	-
4	503552201	PLUG -	1	-
5	576717602	SLEEVE -	4	-
6	510164901	GASKET -	1	-
7	575355806	CYLINDER ASSY -	1	-
8	584807806	PISTON ASSY -	1	-
9	505215701	PISTON RING -	1	-
10	737441000	SNAP RING -	2	-
11	503256302	NEEDLE BEARING -	1	-
12	575270003	GASKET KIT *A=set of gaskets*	1	-
13	520291101	BUSHING -	1	-
1	525887402	SCREW CITXPANT	1	-

Ref.	Article N.	Description	Qty	Kit
2	504106301	HANDLE INSERT	1	-
4	575382205	FUEL TANK ASSY	1	-
5	501152901	TANK VENT ASSY	1	-
6	544099801	THROTTLE LOCKOUT	1	-
7	544099901	SPRING	1	-
8	505157701	THROTTLE	1	-
9	720182520	PARALLEL PIN	1	-
10	521887901	THROTTLE CABLE ASSY	1	-
11	525798103	SCREW ITXSCFT	1	-
12	573993503	FUEL HOSE	1	-
13	503443203	FUEL FILTER *18-40 µm (Blue)*	1	-
14	505165901	COVER	1	-
15	586312103	ANTIVIBRATION ELEMENT	1	-
16	505128702	ANTIVIBRATION ELEMENT	1	-
17	523085501	DEFLECTION LIMITER	1	-
18	501007601	SUPPORT	1	-
19	522620003	TANK CAP ASSY	1	-
20	589241101	GASKET	1	-
21	503578901	HOLDER	1	-
22	525798103	SCREW ITXSCFT	1	-
23	577844301	DECAL	1	-
24	529578202	FUEL HOSE ASSY *From s/n 20161000481 - with magnet*	1	-
1	575388905	FRONT HANDLE	1	-
2	525798103	SCREW ITXSCFT	2	-
3	525798101	SCREW ITXSCFT	3	-
4	505129705	ANTIVIBRATION ELEMENT	1	-
1	581914802	MUFFLER KIT -	1	-
2	724128759	SCREW CRPANM -	1	-
3	505171301	SPARK ARRESTER -	1	-
4	525825106	SCREW ITXSCM *s/n from 20132500001 -*	2	-
5	577656301	SLEEVE *s/n up to - 20132499999*	2	-
6	581918501	GASKET -	1	-

Ref.	Article N.	Description	Qty	Kit
7	585178701	HEAT DEFLECTOR -	1	-
8	577902201	WASHER *s/n up to - 20132499999*	2	-
9	525762501	SCREW ITXSCM -	2	-
10	575270003	GASKET KIT *A=set of gaskets*	1	-
11	725537655	SCREW IHSCM *s/n up to - 20132499999*	2	-
1	505157501	AIR CONDUCTOR -	1	-
2	505159207	STARTER ASSY -	1	-
3	537232501	STARTER HANDLE -	1	-
4	505305125	STARTER ROPE -	1	-
5	576356601	SCREW ITXSCT -	1	-
6	537283201	SLEEVE -	1	-
7	505158101	STARTER PULLEY ASSY -	1	-
8	525887401	SCREW CITXPANT -	2	-
9	598750301	SPRING CASSETTE ASSY -	1	-
10	525824501	SCREW CITXPANMO -	4	-
11	505159102	STARTER HOUSING -	1	-
12	523035601	LABEL -	1	-
1	522795107	IGNITION MODULE ASSY *s/n up to - 20121499999 (14MHz)*	1	-
1	596214001	IGNITION MODULE *s/n from 20121500001 - (8MHz)*	1	-
2	501485404	SPARK PLUG CAP ASSY	1	-
3	525755203	SCREW ITXSCFM	2	-
4	575430601	WIRING ASSY *s/n up to - 20121499999 (14MHz)*	1	-
4	577967601	WIRING ASSY	1	-

Ref.	Article N.	Description	Qty	Kit
		s/n from 20121500001 - (8MHz)		
5	505178201	CABLE HOLDER	1	-
6	585321801	NUT	1	-
7	504872403	FLYWHEEL ASSY	1	-
8	503230042	WASHER	2	-
9	501673501	SPRING	2	-
10	501673201	PAWL	2	-
11	506006901	SCREW	2	-
12	504043505	CABLE COVER	1	-
13	503238501	SHRINKAGE HOSE	2	-
14	525887401	SCREW CITXPANT	1	-

CARBURETOR DETAILS

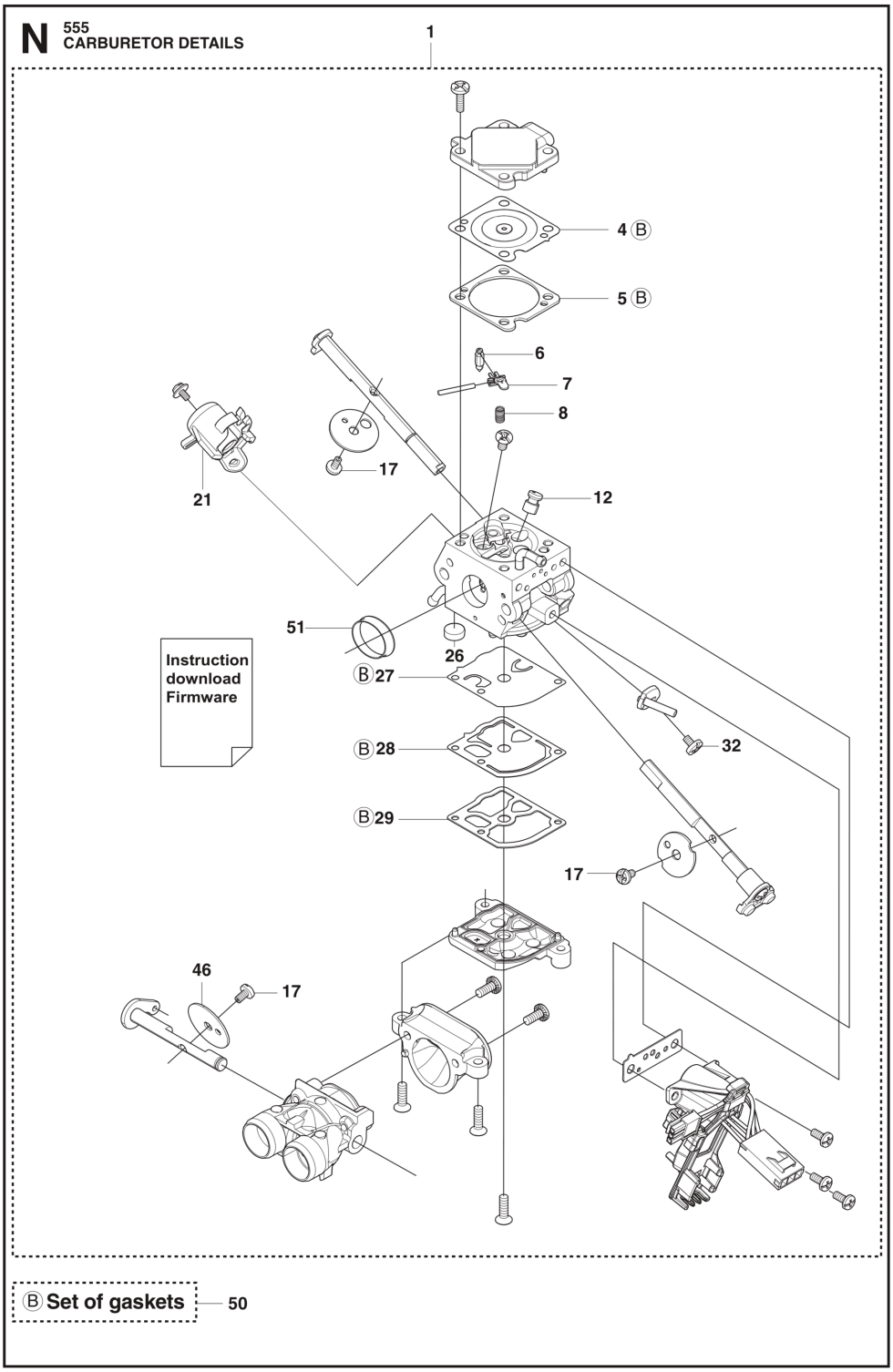

Ref.	Article N.	Description	Qty	Kit
1	575439201	TOOL -	1	-
2	522521101	COMBINATION WRENCH -	1	-
3	503558601	SPANNER -	1	-

Ref.	Article N.	Description	Qty	Kit
4	503558602	SPANNER -	1	-
5	503621201	GREASE -	1	-
6	501911401	GREASE GUN -	1	-
7	583897101	DIAGNOSTIC TOOL KIT -	1	-
8	576183401	CABLE ASSY *Diagnostics cable 14 Mhz*	1	-
9	522986502	WINTER KIT -	1	-
10	505166101	WINTER COVER -	1	-
11	503405901	WINTER PLUG -	1	-
12	503217016	SCREW CCRPANT -	2	-
13	740420100	O-RING -	2	-
14	577014003	SPIKE OUTER -	1	-
15	575793501	SCREW ITXPANM -	2	-
16	577962501	SPIKE OUTER -	1	-
17	503222401	LOCK NUT -	2	-
18	578125501	WINTER PLUG -	1	-
19	574889801	ENCLOSED KIT -	1	-
20	576952201	CABLE ASSY *Diagnostics cable 8 MHz*	1	-
21	503267201	GLUE -	1	-
22	575880701	WRENCH -	1	-
1	505126304	AIR FILTER ASSY *NYLON 80 µm Black s/n up to - 20202699999*	1	-
1	505126305	AIR FILTER ASSY *NYLON 44 µm Yellow s/n up to - 20202699999*	1	-
1	505126306	AIR FILTER ASSY	1	-

Ref.	Article N.	Description	Qty	Kit
		FELT White s/n up to - 20202699999		
1	505126307	AIR FILTER *NYLON 25 µm Orange s/n up to - 20202699999*	1	-
1	590458801	AIR FILTER *NYLON 64 µm Black s/n from 20202700001 -*	1	-
1	590458802	AIR FILTER *NYLON 25 µm Yellow s/n from 20202700001 -*	1	-
1	590458803	AIR FILTER ASSY *Non Woven Nature s/n from 20202700001 -*	1	-
2	525397905	FILTER HOLDER ASSY *s/n up to - 20202699999*	1	-
2	597275501	FILTER HOLDER ASSY *s/n from 20202700001 -*	1	-
3	505176901	SHACKLE *s/n up to - 20202699999*	1	-
4	510017202	CHOKE CONTROL ASSY	1	-
5	505156201	SCREW	1	-
6	525588101	SEALING	1	-
7	503936601	PURGE	1	-
8	574353503	SCREW ITXSCM	2	-
9	525344303	FUEL HOSE *s/n from 20173800688*	1	-
9	589357101	VENTILATING HOSE *s/n up to - 20154500384*	1	-
9	587645404	VENTILATING HOSE *s/n from 20154500385*	1	-
10	579194101	CARBURETTOR *s/n up to - 20121499999 (ZAMA EL44)*	1	-
10	501463308	CARBURETTOR KIT *From s/n 20121500001-*	1	-
11	526818101	SCREW ITXSCM	4	-
12	505165202	FLANGE	1	-
13	503226503	SQUARE NUT	2	-
14	583964103	INLET PIPE	1	-
14	583964104	INLET PIPE *Cold resistant*	1	-
15	520290901	INTERMEDIATE WALL	1	-
16	525619201	SEALING	1	-
17	525619001	SEALING	1	-
18	523056801	FUEL HOSE	1	-

Ref.	Article N.	Description	Qty	Kit
20	577536401	WIRING ASSY *s/n from 20121500001 -*	1	-
21	582025101	SUPPORT SLEEVE	1	-
22	598934501	FILTER UNIT	1	-
23	731231401	HEXAGON NUT *s/n from 20202700001 -*	1	-
1	598934701	FILTER UNIT	1	-
1	579194101	CARBURETTOR *s/n up to - 20121499999 (ZAMA EL44)*	1	-
1	501463308	CARBURETTOR KIT	1	-
4	522517401	DIAPHRAGM	1	-
5	522517501	GASKET	1	-
6	503479701	VALVE	1	-
7	503665901	LEVER	1	-
8	537383401	SPRING	1	-
12	576414201	MAIN NOZZLE	1	-
17	503481801	SCREW	3	-
21	522517801	THROTTLE LEVER	1	-
26	503535701	STRAINER	1	-
27	537383101	DIAPHRAGM PUMP	1	-
28	537403301	DIAPHRAGM	1	-
29	537020101	GASKET	1	-
32	503479001	SCREW	1	-
46	537177001	VALVE	1	-
50	522518901	GASKET KIT *B=set of gaskets*	1	-
51	582025101	SUPPORT SLEEVE	1	-
1	505200902	HAND GUARD	1	-
2	526834501	SCREW	2	-
3	577780201	BUSHING	2	-
4	505197301	NUT	2	-
5	501846104	CLUTCH COVER ASSY	1	-
6	503751801	PIN	1	-
7	526221801	SCREW CITXPANT	5	-
8	505199301	KNEE JOINT ASSY	1	-
9	503908301	BRAKE SPRING	1	-
10	505199502	BRAKE BAND ASSY	1	-
11	505201601	GUARD	1	-
12	505199703	COVER	1	-

Ref.	Article N.	Description	Qty	Kit
14	523058001	LABEL *- up to s/n 20202399999*	1	-
15	575260404	CHAIN TENSIONER KIT	1	-
16	740480702	O-RING	1	-
17	503230063	WASHER	1	-
20	537017401	BEARING SLEEVE	1	-
22	505199801	CHAIN GUIDE	1	-
1	589809002	CLUTCH ASSY	1	-
2	502164701	CLUTCH SPRING *s/n from 20164100193 -*	3	-
2	580653502	CLUTCH SPRING *s/n from 20132500001 - up to s/n 20164100192*	3	-
3	575261005	CLUTCH DRUM ASSY *- up to s/n 20202200048 .325 x7*	1	-
3	575261006	CLUTCH DRUM *- up to s/n 20202200048 3/8 x7*	1	-
3	575261009	CLUTCH DRUM ASSY	1	-
3	575261010	CLUTCH DRUM ASSY	1	-
4	501457402	RIM SPROCKET *.325x7*	1	-
4	501598002	RIM SPROCKET *3/8x7*	1	-
5	503253401	NEEDLE BEARING	1	-
6	505200801	WORM WHEEL *- up to s/n 20202200048*	1	-
6	586201701	WORM WHEEL *s/n from 20202200049 - .325*	1	-
6	587633001	WORM WHEEL *s/n from 20202200049 - 3/8*	1	-
7	505199908	OIL PUMP ASSY	1	-
8	505200202	PUMP PISTON	1	-
9	505200301	CASING	1	-
10	503230060	WASHER	2	-
11	503891601	SPRING	1	-
12	505157001	ADJUSTMENT SCREW	1	-
14	526818102	SCREW ITXSCM	2	-
15	505200402	OIL HOSE	1	-
16	504710003	OIL PLUMMET	1	-
17	720123300	PARALLEL PIN	2	-
18	503891501	SPRING	1	-
19	505200101	PUMP CYLINDER	1	-

Ref.	Article N.	Description	Qty	Kit
20	503624902	SEALING PLUG	1	-
21	598937705	CLUTCH DRUM ASSY	1	-
21	598937707	CLUTCH DRUM ASSY	1	-
1	588193901	CARBURETTOR AREA BASE	1	-
2	525755202	SCREW ITXSCFM	4	-
3	503869301	SUPPORT	2	-
4	581559201	BELLOWS	1	-
5	575380224	CRANKCASE ASSY	1	-
6	505201101	CHAIN GUIDE PLATE	1	-
7	575793501	SCREW ITXPANM	2	-
8	537403501	FILTER	1	-
9	530026119	CHECK VALVE	1	-
10	537210701	SPRING GUIDE	1	-
11	503436501	POSITION SPRING	1	-
12	505201201	CATCH	1	-
13	503751801	PIN	1	-
14	593806001	GUIDE BUSHING	2	-
15	505217301	BAR BOLT	2	-
16	525824401	SCREW ITXSCM	2	-
17	575841104	SCREW ITXSCM	6	-
19	577935201	SPIKE	1	-
20	537377902	CHAIN CATCHER	1	-
21	525798103	SCREW ITXSCFT	1	-
22	505125801	DEFLECTION LIMITER	1	-
23	595303003	SNAP LOCKING	1	-
24	588065501	AIR NOZZLE	1	-
25	526818101	SCREW ITXSCM	1	-
26	522620003	TANK CAP ASSY	1	-
27	589241101	GASKET	1	-
28	503578901	HOLDER	1	-
29	525391201	RADIAL SEAL *- up to s/n 20202399999*	1	-
30	525887401	SCREW CITXPANT	1	-
31	575270003	GASKET KIT *A=set of gaskets*	1	-
32	574889801	ENCLOSED KIT	1	-
33	596911301	PROTECTIVE CAP *- up to s/n 20224908629*	1	-
1	575545214	CRANKSHAFT ASSY	1	-

Ref.	Article N.	Description	Qty	Kit
		- up to s/n 20202399999		
2	505133505	BALL BEARING	1	-
3	525434204	BALL BEARING	1	-
4	503256302	NEEDLE BEARING	1	-
5	525391201	RADIAL SEAL *- up to s/n 20202399999*	1	-
6	505416101	RADIAL SEAL	1	-
7	575545218	CRANKSHAFT ASSY *s/n from 20202400001 -*	1	-
1	587248504	CYLINDER COVER ASSY *s/n up to - 20202699999*	1	-
2	587149501	LABEL -	1	-
3	587248703	CYLINDER COVER ASSY -	1	-
1	531008615	SPARK PLUG -	1	-
2	582392701	SCREW -	4	-
3	575276901	DECOMPRESSION VALVE -	1	-
4	503552201	PLUG -	1	-
5	576717602	SLEEVE -	4	-
6	510164901	GASKET -	1	-
7	575355806	CYLINDER ASSY -	1	-
8	584807806	PISTON ASSY -	1	-
9	505215701	PISTON RING -	1	-
10	737441000	SNAP RING -	2	-
11	503256302	NEEDLE BEARING -	1	-
12	575270003	GASKET KIT *A=set of gaskets*	1	-
13	520291101	BUSHING -	1	-
1	525887402	SCREW CITXPANT	1	-

Ref.	Article N.	Description	Qty	Kit
2	504106301	HANDLE INSERT	1	-
4	575382205	FUEL TANK ASSY	1	-
5	501152901	TANK VENT ASSY	1	-
6	544099801	THROTTLE LOCKOUT	1	-
7	544099901	SPRING	1	-
8	505157701	THROTTLE	1	-
9	720182520	PARALLEL PIN	1	-
10	521887901	THROTTLE CABLE ASSY	1	-
11	525798103	SCREW ITXSCFT	1	-
12	573993503	FUEL HOSE	1	-
13	503443203	FUEL FILTER *18-40 µm (Blue)*	1	-
14	505165901	COVER	1	-
15	586312103	ANTIVIBRATION ELEMENT	1	-
16	505128702	ANTIVIBRATION ELEMENT	1	-
17	523085501	DEFLECTION LIMITER	1	-
18	501007601	SUPPORT	1	-
19	522620003	TANK CAP ASSY	1	-
20	589241101	GASKET	1	-
21	503578901	HOLDER	1	-
22	525798103	SCREW ITXSCFT	1	-
23	577844301	DECAL	1	-
24	529578202	FUEL HOSE ASSY *From s/n 20161000481 - with magnet*	1	-
1	575388905	FRONT HANDLE	1	-
2	525798103	SCREW ITXSCFT	2	-
3	525798101	SCREW ITXSCFT	3	-
4	505129705	ANTIVIBRATION ELEMENT	1	-
1	581914802	MUFFLER KIT -	1	-
2	724128759	SCREW CRPANM -	1	-
3	505171301	SPARK ARRESTER -	1	-
4	525825106	SCREW ITXSCM *s/n from 20132500001 -*	2	-
5	577656301	SLEEVE *s/n up to - 20132499999*	2	-
6	581918501	GASKET -	1	-

Ref.	Article N.	Description	Qty	Kit
7	585178701	HEAT DEFLECTOR -	1	-
8	577902201	WASHER *s/n up to - 20132499999*	2	-
9	525762501	SCREW ITXSCM -	2	-
10	575270003	GASKET KIT *A=set of gaskets*	1	-
11	725537655	SCREW IHSCM *s/n up to - 20132499999*	2	-
1	505157501	AIR CONDUCTOR -	1	-
2	505159207	STARTER ASSY -	1	-
3	537232501	STARTER HANDLE -	1	-
4	505305125	STARTER ROPE -	1	-
5	576356601	SCREW ITXSCT -	1	-
6	537283201	SLEEVE -	1	-
7	505158101	STARTER PULLEY ASSY -	1	-
8	525887401	SCREW CITXPANT -	2	-
9	598750301	SPRING CASSETTE ASSY -	1	-
10	525824501	SCREW CITXPANMO -	4	-
11	505159102	STARTER HOUSING -	1	-
12	523035601	LABEL -	1	-
1	522795107	IGNITION MODULE ASSY *s/n up to - 20121499999 (14MHz)*	1	-
1	596214001	IGNITION MODULE *s/n from 20121500001 - (8MHz)*	1	-
2	501485404	SPARK PLUG CAP ASSY	1	-
3	525755203	SCREW ITXSCFM	2	-
4	575430601	WIRING ASSY *s/n up to - 20121499999 (14MHz)*	1	-
4	577967601	WIRING ASSY	1	-

Ref.	Article N.	Description	Qty	Kit
		s/n from 20121500001 - (8MHz)		
5	505178201	CABLE HOLDER	1	-
6	585321801	NUT	1	-
7	504872403	FLYWHEEL ASSY	1	-
8	503230042	WASHER	2	-
9	501673501	SPRING	2	-
10	501673201	PAWL	2	-
11	506006901	SCREW	2	-
12	504043505	CABLE COVER	1	-
13	503238501	SHRINKAGE HOSE	2	-
14	525887401	SCREW CITXPANT	1	-

CHAIN BRAKE AND CLUTCH COVER

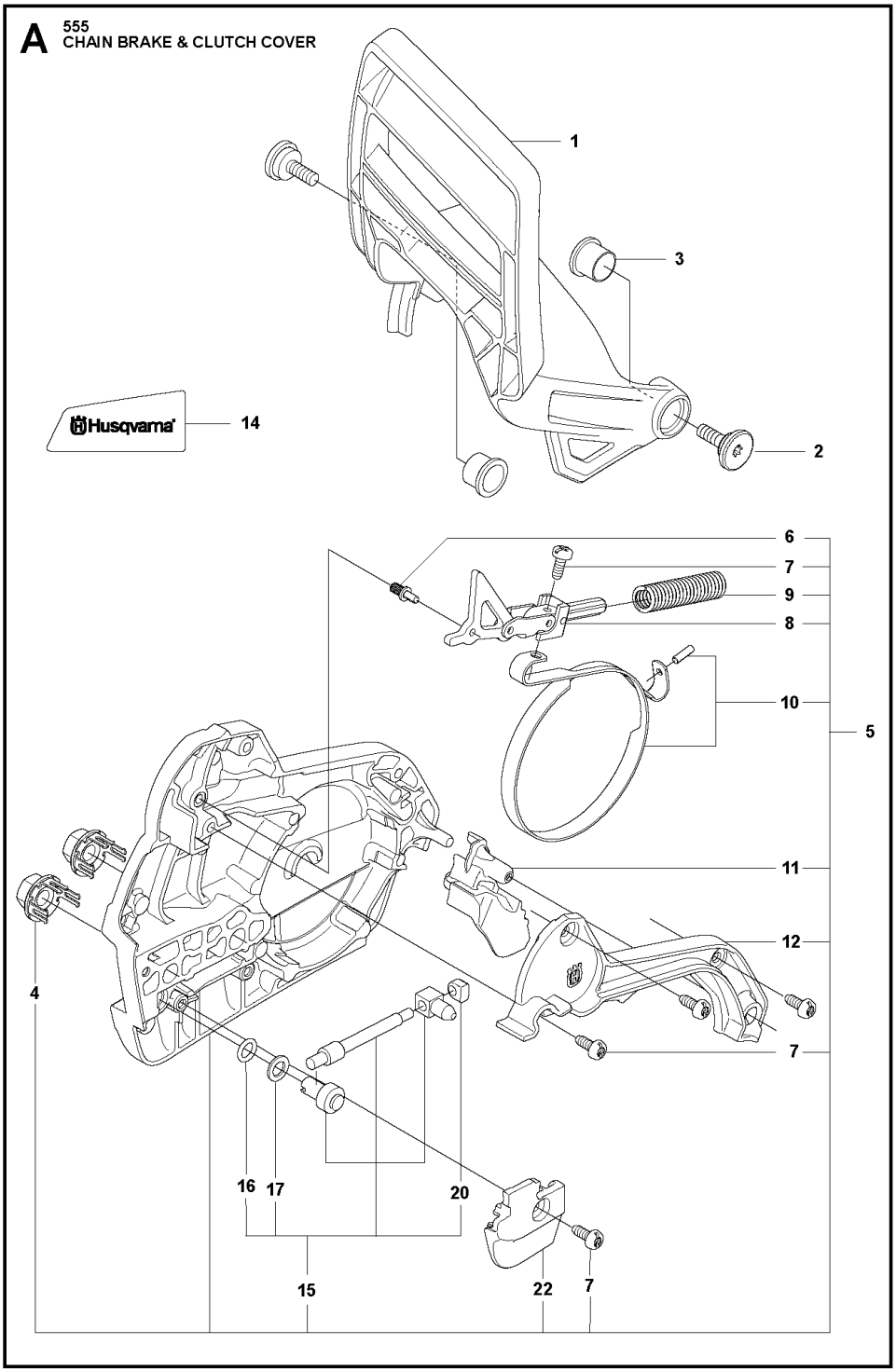

Ref.	Article N.	Description	Qty	Kit
1	575439201	TOOL -	1	-
2	522521101	COMBINATION WRENCH -	1	-
3	503558601	SPANNER -	1	-

Ref.	Article N.	Description	Qty	Kit
4	503558602	SPANNER -	1	-
5	503621201	GREASE -	1	-
6	501911401	GREASE GUN -	1	-
7	583897101	DIAGNOSTIC TOOL KIT -	1	-
8	576183401	CABLE ASSY *Diagnostics cable 14 Mhz*	1	-
9	522986502	WINTER KIT -	1	-
10	505166101	WINTER COVER -	1	-
11	503405901	WINTER PLUG -	1	-
12	503217016	SCREW CCRPANT -	2	-
13	740420100	O-RING -	2	-
14	577014003	SPIKE OUTER -	1	-
15	575793501	SCREW ITXPANM -	2	-
16	577962501	SPIKE OUTER -	1	-
17	503222401	LOCK NUT -	2	-
18	578125501	WINTER PLUG -	1	-
19	574889801	ENCLOSED KIT -	1	-
20	576952201	CABLE ASSY *Diagnostics cable 8 MHz*	1	-
21	503267201	GLUE -	1	-
22	575880701	WRENCH -	1	-
1	505126304	AIR FILTER ASSY *NYLON 80 µm Black s/n up to - 20202699999*	1	-
1	505126305	AIR FILTER ASSY *NYLON 44 µm Yellow s/n up to - 20202699999*	1	-
1	505126306	AIR FILTER ASSY	1	-

Ref.	Article N.	Description	Qty	Kit
		FELT White s/n up to - 20202699999		
1	505126307	AIR FILTER *NYLON 25 µm Orange s/n up to - 20202699999*	1	-
1	590458801	AIR FILTER *NYLON 64 µm Black s/n from 20202700001 -*	1	-
1	590458802	AIR FILTER *NYLON 25 µm Yellow s/n from 20202700001 -*	1	-
1	590458803	AIR FILTER ASSY *Non Woven Nature s/n from 20202700001 -*	1	-
2	525397905	FILTER HOLDER ASSY *s/n up to - 20202699999*	1	-
2	597275501	FILTER HOLDER ASSY *s/n from 20202700001 -*	1	-
3	505176901	SHACKLE *s/n up to - 20202699999*	1	-
4	510017202	CHOKE CONTROL ASSY	1	-
5	505156201	SCREW	1	-
6	525588101	SEALING	1	-
7	503936601	PURGE	1	-
8	574353503	SCREW ITXSCM	2	-
9	525344303	FUEL HOSE *s/n from 20173800688*	1	-
9	589357101	VENTILATING HOSE *s/n up to - 20154500384*	1	-
9	587645404	VENTILATING HOSE *s/n from 20154500385*	1	-
10	579194101	CARBURETTOR *s/n up to - 20121499999 (ZAMA EL44)*	1	-
10	501463308	CARBURETTOR KIT *From s/n 20121500001-*	1	-
11	526818101	SCREW ITXSCM	4	-
12	505165202	FLANGE	1	-
13	503226503	SQUARE NUT	2	-
14	583964103	INLET PIPE	1	-
14	583964104	INLET PIPE *Cold resistant*	1	-
15	520290901	INTERMEDIATE WALL	1	-
16	525619201	SEALING	1	-
17	525619001	SEALING	1	-
18	523056801	FUEL HOSE	1	-

Ref.	Article N.	Description	Qty	Kit
20	577536401	WIRING ASSY *s/n from 20121500001 -*	1	-
21	582025101	SUPPORT SLEEVE	1	-
22	598934501	FILTER UNIT	1	-
23	731231401	HEXAGON NUT *s/n from 20202700001 -*	1	-
1	598934701	FILTER UNIT	1	-
1	579194101	CARBURETTOR *s/n up to - 20121499999 (ZAMA EL44)*	1	-
1	501463308	CARBURETTOR KIT	1	-
4	522517401	DIAPHRAGM	1	-
5	522517501	GASKET	1	-
6	503479701	VALVE	1	-
7	503665901	LEVER	1	-
8	537383401	SPRING	1	-
12	576414201	MAIN NOZZLE	1	-
17	503481801	SCREW	3	-
21	522517801	THROTTLE LEVER	1	-
26	503535701	STRAINER	1	-
27	537383101	DIAPHRAGM PUMP	1	-
28	537403301	DIAPHRAGM	1	-
29	537020101	GASKET	1	-
32	503479001	SCREW	1	-
46	537177001	VALVE	1	-
50	522518901	GASKET KIT *B=set of gaskets*	1	-
51	582025101	SUPPORT SLEEVE	1	-
1	505200902	HAND GUARD	1	-
2	526834501	SCREW	2	-
3	577780201	BUSHING	2	-
4	505197301	NUT	2	-
5	501846104	CLUTCH COVER ASSY	1	-
6	503751801	PIN	1	-
7	526221801	SCREW CITXPANT	5	-
8	505199301	KNEE JOINT ASSY	1	-
9	503908301	BRAKE SPRING	1	-
10	505199502	BRAKE BAND ASSY	1	-
11	505201601	GUARD	1	-
12	505199703	COVER	1	-

Ref.	Article N.	Description	Qty	Kit
14	523058001	LABEL *- up to s/n 20202399999*	1	-
15	575260404	CHAIN TENSIONER KIT	1	-
16	740480702	O-RING	1	-
17	503230063	WASHER	1	-
20	537017401	BEARING SLEEVE	1	-
22	505199801	CHAIN GUIDE	1	-
1	589809002	CLUTCH ASSY	1	-
2	502164701	CLUTCH SPRING *s/n from 20164100193 -*	3	-
2	580653502	CLUTCH SPRING *s/n from 20132500001 - up to s/n 20164100192*	3	-
3	575261005	CLUTCH DRUM ASSY *- up to s/n 20202200048 .325 x7*	1	-
3	575261006	CLUTCH DRUM *- up to s/n 20202200048 3/8 x7*	1	-
3	575261009	CLUTCH DRUM ASSY	1	-
3	575261010	CLUTCH DRUM ASSY	1	-
4	501457402	RIM SPROCKET *.325x7*	1	-
4	501598002	RIM SPROCKET *3/8x7*	1	-
5	503253401	NEEDLE BEARING	1	-
6	505200801	WORM WHEEL *- up to s/n 20202200048*	1	-
6	586201701	WORM WHEEL *s/n from 20202200049 - .325*	1	-
6	587633001	WORM WHEEL *s/n from 20202200049 - 3/8*	1	-
7	505199908	OIL PUMP ASSY	1	-
8	505200202	PUMP PISTON	1	-
9	505200301	CASING	1	-
10	503230060	WASHER	2	-
11	503891601	SPRING	1	-
12	505157001	ADJUSTMENT SCREW	1	-
14	526818102	SCREW ITXSCM	2	-
15	505200402	OIL HOSE	1	-
16	504710003	OIL PLUMMET	1	-
17	720123300	PARALLEL PIN	2	-
18	503891501	SPRING	1	-
19	505200101	PUMP CYLINDER	1	-

Ref.	Article N.	Description	Qty	Kit
20	503624902	SEALING PLUG	1	-
21	598937705	CLUTCH DRUM ASSY	1	-
21	598937707	CLUTCH DRUM ASSY	1	-
1	588193901	CARBURETTOR AREA BASE	1	-
2	525755202	SCREW ITXSCFM	4	-
3	503869301	SUPPORT	2	-
4	581559201	BELLOWS	1	-
5	575380224	CRANKCASE ASSY	1	-
6	505201101	CHAIN GUIDE PLATE	1	-
7	575793501	SCREW ITXPANM	2	-
8	537403501	FILTER	1	-
9	530026119	CHECK VALVE	1	-
10	537210701	SPRING GUIDE	1	-
11	503436501	POSITION SPRING	1	-
12	505201201	CATCH	1	-
13	503751801	PIN	1	-
14	593806001	GUIDE BUSHING	2	-
15	505217301	BAR BOLT	2	-
16	525824401	SCREW ITXSCM	2	-
17	575841104	SCREW ITXSCM	6	-
19	577935201	SPIKE	1	-
20	537377902	CHAIN CATCHER	1	-
21	525798103	SCREW ITXSCFT	1	-
22	505125801	DEFLECTION LIMITER	1	-
23	595303003	SNAP LOCKING	1	-
24	588065501	AIR NOZZLE	1	-
25	526818101	SCREW ITXSCM	1	-
26	522620003	TANK CAP ASSY	1	-
27	589241101	GASKET	1	-
28	503578901	HOLDER	1	-
29	525391201	RADIAL SEAL *- up to s/n 20202399999*	1	-
30	525887401	SCREW CITXPANT	1	-
31	575270003	GASKET KIT *A=set of gaskets*	1	-
32	574889801	ENCLOSED KIT	1	-
33	596911301	PROTECTIVE CAP *- up to s/n 20224908629*	1	-
1	575545214	CRANKSHAFT ASSY	1	-

Ref.	Article N.	Description	Qty	Kit
		- up to s/n 20202399999		
2	505133505	BALL BEARING	1	-
3	525434204	BALL BEARING	1	-
4	503256302	NEEDLE BEARING	1	-
5	525391201	RADIAL SEAL *- up to s/n 20202399999*	1	-
6	505416101	RADIAL SEAL	1	-
7	575545218	CRANKSHAFT ASSY *s/n from 20202400001 -*	1	-
1	587248504	CYLINDER COVER ASSY *s/n up to - 20202699999*	1	-
2	587149501	LABEL -	1	-
3	587248703	CYLINDER COVER ASSY -	1	-
1	531008615	SPARK PLUG -	1	-
2	582392701	SCREW -	4	-
3	575276901	DECOMPRESSION VALVE -	1	-
4	503552201	PLUG -	1	-
5	576717602	SLEEVE -	4	-
6	510164901	GASKET -	1	-
7	575355806	CYLINDER ASSY -	1	-
8	584807806	PISTON ASSY -	1	-
9	505215701	PISTON RING -	1	-
10	737441000	SNAP RING -	2	-
11	503256302	NEEDLE BEARING -	1	-
12	575270003	GASKET KIT *A=set of gaskets*	1	-
13	520291101	BUSHING -	1	-
1	525887402	SCREW CITXPANT	1	-

Ref.	Article N.	Description	Qty	Kit
2	504106301	HANDLE INSERT	1	-
4	575382205	FUEL TANK ASSY	1	-
5	501152901	TANK VENT ASSY	1	-
6	544099801	THROTTLE LOCKOUT	1	-
7	544099901	SPRING	1	-
8	505157701	THROTTLE	1	-
9	720182520	PARALLEL PIN	1	-
10	521887901	THROTTLE CABLE ASSY	1	-
11	525798103	SCREW ITXSCFT	1	-
12	573993503	FUEL HOSE	1	-
13	503443203	FUEL FILTER *18-40 µm (Blue)*	1	-
14	505165901	COVER	1	-
15	586312103	ANTIVIBRATION ELEMENT	1	-
16	505128702	ANTIVIBRATION ELEMENT	1	-
17	523085501	DEFLECTION LIMITER	1	-
18	501007601	SUPPORT	1	-
19	522620003	TANK CAP ASSY	1	-
20	589241101	GASKET	1	-
21	503578901	HOLDER	1	-
22	525798103	SCREW ITXSCFT	1	-
23	577844301	DECAL	1	-
24	529578202	FUEL HOSE ASSY *From s/n 20161000481 - with magnet*	1	-
1	575388905	FRONT HANDLE	1	-
2	525798103	SCREW ITXSCFT	2	-
3	525798101	SCREW ITXSCFT	3	-
4	505129705	ANTIVIBRATION ELEMENT	1	-
1	581914802	MUFFLER KIT -	1	-
2	724128759	SCREW CRPANM -	1	-
3	505171301	SPARK ARRESTER -	1	-
4	525825106	SCREW ITXSCM *s/n from 20132500001 -*	2	-
5	577656301	SLEEVE *s/n up to - 20132499999*	2	-
6	581918501	GASKET -	1	-

Ref.	Article N.	Description	Qty	Kit
7	585178701	HEAT DEFLECTOR -	1	-
8	577902201	WASHER *s/n up to - 20132499999*	2	-
9	525762501	SCREW ITXSCM -	2	-
10	575270003	GASKET KIT *A=set of gaskets*	1	-
11	725537655	SCREW IHSCM *s/n up to - 20132499999*	2	-
1	505157501	AIR CONDUCTOR -	1	-
2	505159207	STARTER ASSY -	1	-
3	537232501	STARTER HANDLE -	1	-
4	505305125	STARTER ROPE -	1	-
5	576356601	SCREW ITXSCT -	1	-
6	537283201	SLEEVE -	1	-
7	505158101	STARTER PULLEY ASSY -	1	-
8	525887401	SCREW CITXPANT -	2	-
9	598750301	SPRING CASSETTE ASSY -	1	-
10	525824501	SCREW CITXPANMO -	4	-
11	505159102	STARTER HOUSING -	1	-
12	523035601	LABEL -	1	-
1	522795107	IGNITION MODULE ASSY *s/n up to - 20121499999 (14MHz)*	1	-
1	596214001	IGNITION MODULE *s/n from 20121500001 - (8MHz)*	1	-
2	501485404	SPARK PLUG CAP ASSY	1	-
3	525755203	SCREW ITXSCFM	2	-
4	575430601	WIRING ASSY *s/n up to - 20121499999 (14MHz)*	1	-
4	577967601	WIRING ASSY	1	-

Ref.	Article N.	Description	Qty	Kit
		s/n from 20121500001 - (8MHz)		
5	505178201	CABLE HOLDER	1	-
6	585321801	NUT	1	-
7	504872403	FLYWHEEL ASSY	1	-
8	503230042	WASHER	2	-
9	501673501	SPRING	2	-
10	501673201	PAWL	2	-
11	506006901	SCREW	2	-
12	504043505	CABLE COVER	1	-
13	503238501	SHRINKAGE HOSE	2	-
14	525887401	SCREW CITXPANT	1	-

CLUTCH AND OIL PUMP

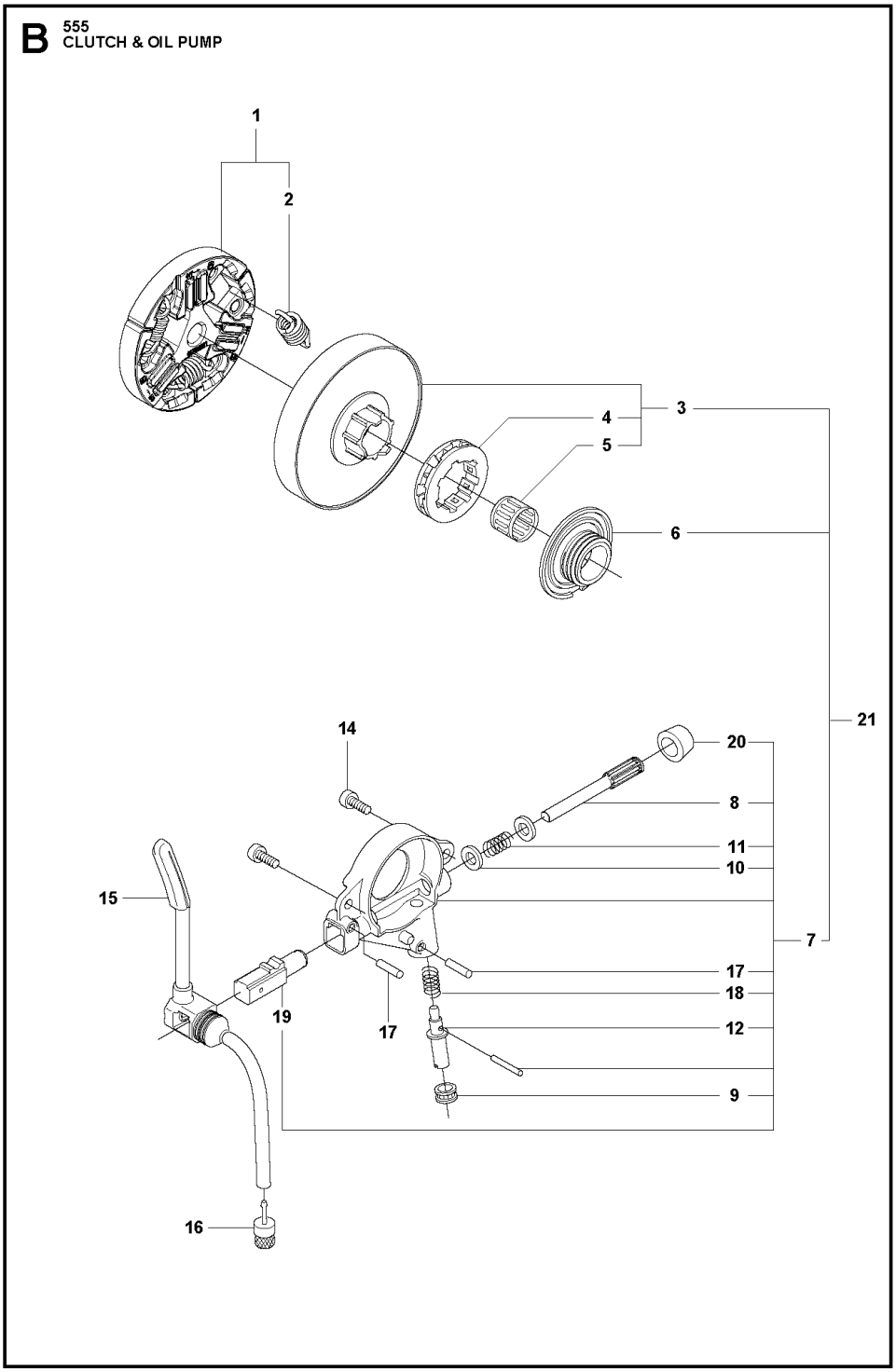

Ref.	Article N.	Description	Qty	Kit
1	575439201	TOOL -	1	-
2	522521101	COMBINATION WRENCH -	1	-
3	503558601	SPANNER -	1	-

Ref.	Article N.	Description	Qty	Kit
4	503558602	SPANNER -	1	-
5	503621201	GREASE -	1	-
6	501911401	GREASE GUN -	1	-
7	583897101	DIAGNOSTIC TOOL KIT -	1	-
8	576183401	CABLE ASSY *Diagnostics cable 14 Mhz*	1	-
9	522986502	WINTER KIT -	1	-
10	505166101	WINTER COVER -	1	-
11	503405901	WINTER PLUG -	1	-
12	503217016	SCREW CCRPANT -	2	-
13	740420100	O-RING -	2	-
14	577014003	SPIKE OUTER -	1	-
15	575793501	SCREW ITXPANM -	2	-
16	577962501	SPIKE OUTER -	1	-
17	503222401	LOCK NUT -	2	-
18	578125501	WINTER PLUG -	1	-
19	574889801	ENCLOSED KIT -	1	-
20	576952201	CABLE ASSY *Diagnostics cable 8 MHz*	1	-
21	503267201	GLUE -	1	-
22	575880701	WRENCH -	1	-
1	505126304	AIR FILTER ASSY *NYLON 80 µm Black s/n up to - 20202699999*	1	-
1	505126305	AIR FILTER ASSY *NYLON 44 µm Yellow s/n up to - 20202699999*	1	-
1	505126306	AIR FILTER ASSY	1	-

Ref.	Article N.	Description	Qty	Kit
		FELT White s/n up to - 20202699999		
1	505126307	AIR FILTER *NYLON 25 µm Orange s/n up to - 20202699999*	1	-
1	590458801	AIR FILTER *NYLON 64 µm Black s/n from 20202700001 -*	1	-
1	590458802	AIR FILTER *NYLON 25 µm Yellow s/n from 20202700001 -*	1	-
1	590458803	AIR FILTER ASSY *Non Woven Nature s/n from 20202700001 -*	1	-
2	525397905	FILTER HOLDER ASSY *s/n up to - 20202699999*	1	-
2	597275501	FILTER HOLDER ASSY *s/n from 20202700001 -*	1	-
3	505176901	SHACKLE *s/n up to - 20202699999*	1	-
4	510017202	CHOKE CONTROL ASSY	1	-
5	505156201	SCREW	1	-
6	525588101	SEALING	1	-
7	503936601	PURGE	1	-
8	574353503	SCREW ITXSCM	2	-
9	525344303	FUEL HOSE *s/n from 20173800688*	1	-
9	589357101	VENTILATING HOSE *s/n up to - 20154500384*	1	-
9	587645404	VENTILATING HOSE *s/n from 20154500385*	1	-
10	579194101	CARBURETTOR *s/n up to - 20121499999 (ZAMA EL44)*	1	-
10	501463308	CARBURETTOR KIT *From s/n 20121500001-*	1	-
11	526818101	SCREW ITXSCM	4	-
12	505165202	FLANGE	1	-
13	503226503	SQUARE NUT	2	-
14	583964103	INLET PIPE	1	-
14	583964104	INLET PIPE *Cold resistant*	1	-
15	520290901	INTERMEDIATE WALL	1	-
16	525619201	SEALING	1	-
17	525619001	SEALING	1	-
18	523056801	FUEL HOSE	1	-

Ref.	Article N.	Description	Qty	Kit
20	577536401	WIRING ASSY *s/n from 20121500001 -*	1	-
21	582025101	SUPPORT SLEEVE	1	-
22	598934501	FILTER UNIT	1	-
23	731231401	HEXAGON NUT *s/n from 20202700001 -*	1	-
1	598934701	FILTER UNIT	1	-
1	579194101	CARBURETTOR *s/n up to - 20121499999 (ZAMA EL44)*	1	-
1	501463308	CARBURETTOR KIT	1	-
4	522517401	DIAPHRAGM	1	-
5	522517501	GASKET	1	-
6	503479701	VALVE	1	-
7	503665901	LEVER	1	-
8	537383401	SPRING	1	-
12	576414201	MAIN NOZZLE	1	-
17	503481801	SCREW	3	-
21	522517801	THROTTLE LEVER	1	-
26	503535701	STRAINER	1	-
27	537383101	DIAPHRAGM PUMP	1	-
28	537403301	DIAPHRAGM	1	-
29	537020101	GASKET	1	-
32	503479001	SCREW	1	-
46	537177001	VALVE	1	-
50	522518901	GASKET KIT *B=set of gaskets*	1	-
51	582025101	SUPPORT SLEEVE	1	-
1	505200902	HAND GUARD	1	-
2	526834501	SCREW	2	-
3	577780201	BUSHING	2	-
4	505197301	NUT	2	-
5	501846104	CLUTCH COVER ASSY	1	-
6	503751801	PIN	1	-
7	526221801	SCREW CITXPANT	5	-
8	505199301	KNEE JOINT ASSY	1	-
9	503908301	BRAKE SPRING	1	-
10	505199502	BRAKE BAND ASSY	1	-
11	505201601	GUARD	1	-
12	505199703	COVER	1	-

Ref.	Article N.	Description	Qty	Kit
14	523058001	LABEL *- up to s/n 20202399999*	1	-
15	575260404	CHAIN TENSIONER KIT	1	-
16	740480702	O-RING	1	-
17	503230063	WASHER	1	-
20	537017401	BEARING SLEEVE	1	-
22	505199801	CHAIN GUIDE	1	-
1	589809002	CLUTCH ASSY	1	-
2	502164701	CLUTCH SPRING *s/n from 20164100193 -*	3	-
2	580653502	CLUTCH SPRING *s/n from 20132500001 - up to s/n 20164100192*	3	-
3	575261005	CLUTCH DRUM ASSY *- up to s/n 20202200048 .325 x7*	1	-
3	575261006	CLUTCH DRUM *- up to s/n 20202200048 3/8 x7*	1	-
3	575261009	CLUTCH DRUM ASSY	1	-
3	575261010	CLUTCH DRUM ASSY	1	-
4	501457402	RIM SPROCKET *.325x7*	1	-
4	501598002	RIM SPROCKET *3/8x7*	1	-
5	503253401	NEEDLE BEARING	1	-
6	505200801	WORM WHEEL *- up to s/n 20202200048*	1	-
6	586201701	WORM WHEEL *s/n from 20202200049 - .325*	1	-
6	587633001	WORM WHEEL *s/n from 20202200049 - 3/8*	1	-
7	505199908	OIL PUMP ASSY	1	-
8	505200202	PUMP PISTON	1	-
9	505200301	CASING	1	-
10	503230060	WASHER	2	-
11	503891601	SPRING	1	-
12	505157001	ADJUSTMENT SCREW	1	-
14	526818102	SCREW ITXSCM	2	-
15	505200402	OIL HOSE	1	-
16	504710003	OIL PLUMMET	1	-
17	720123300	PARALLEL PIN	2	-
18	503891501	SPRING	1	-
19	505200101	PUMP CYLINDER	1	-

Ref.	Article N.	Description	Qty	Kit
20	503624902	SEALING PLUG	1	-
21	598937705	CLUTCH DRUM ASSY	1	-
21	598937707	CLUTCH DRUM ASSY	1	-
1	588193901	CARBURETTOR AREA BASE	1	-
2	525755202	SCREW ITXSCFM	4	-
3	503869301	SUPPORT	2	-
4	581559201	BELLOWS	1	-
5	575380224	CRANKCASE ASSY	1	-
6	505201101	CHAIN GUIDE PLATE	1	-
7	575793501	SCREW ITXPANM	2	-
8	537403501	FILTER	1	-
9	530026119	CHECK VALVE	1	-
10	537210701	SPRING GUIDE	1	-
11	503436501	POSITION SPRING	1	-
12	505201201	CATCH	1	-
13	503751801	PIN	1	-
14	593806001	GUIDE BUSHING	2	-
15	505217301	BAR BOLT	2	-
16	525824401	SCREW ITXSCM	2	-
17	575841104	SCREW ITXSCM	6	-
19	577935201	SPIKE	1	-
20	537377902	CHAIN CATCHER	1	-
21	525798103	SCREW ITXSCFT	1	-
22	505125801	DEFLECTION LIMITER	1	-
23	595303003	SNAP LOCKING	1	-
24	588065501	AIR NOZZLE	1	-
25	526818101	SCREW ITXSCM	1	-
26	522620003	TANK CAP ASSY	1	-
27	589241101	GASKET	1	-
28	503578901	HOLDER	1	-
29	525391201	RADIAL SEAL *- up to s/n 20202399999*	1	-
30	525887401	SCREW CITXPANT	1	-
31	575270003	GASKET KIT *A=set of gaskets*	1	-
32	574889801	ENCLOSED KIT	1	-
33	596911301	PROTECTIVE CAP *- up to s/n 20224908629*	1	-
1	575545214	CRANKSHAFT ASSY	1	-

Ref.	Article N.	Description	Qty	Kit
		- up to s/n 20202399999		
2	505133505	BALL BEARING	1	-
3	525434204	BALL BEARING	1	-
4	503256302	NEEDLE BEARING	1	-
5	525391201	RADIAL SEAL *- up to s/n 20202399999*	1	-
6	505416101	RADIAL SEAL	1	-
7	575545218	CRANKSHAFT ASSY *s/n from 20202400001 -*	1	-
1	587248504	CYLINDER COVER ASSY *s/n up to - 20202699999*	1	-
2	587149501	LABEL -	1	-
3	587248703	CYLINDER COVER ASSY -	1	-
1	531008615	SPARK PLUG -	1	-
2	582392701	SCREW -	4	-
3	575276901	DECOMPRESSION VALVE -	1	-
4	503552201	PLUG -	1	-
5	576717602	SLEEVE -	4	-
6	510164901	GASKET -	1	-
7	575355806	CYLINDER ASSY -	1	-
8	584807806	PISTON ASSY -	1	-
9	505215701	PISTON RING -	1	-
10	737441000	SNAP RING -	2	-
11	503256302	NEEDLE BEARING -	1	-
12	575270003	GASKET KIT *A=set of gaskets*	1	-
13	520291101	BUSHING -	1	-
1	525887402	SCREW CITXPANT	1	-

Ref.	Article N.	Description	Qty	Kit
2	504106301	HANDLE INSERT	1	-
4	575382205	FUEL TANK ASSY	1	-
5	501152901	TANK VENT ASSY	1	-
6	544099801	THROTTLE LOCKOUT	1	-
7	544099901	SPRING	1	-
8	505157701	THROTTLE	1	-
9	720182520	PARALLEL PIN	1	-
10	521887901	THROTTLE CABLE ASSY	1	-
11	525798103	SCREW ITXSCFT	1	-
12	573993503	FUEL HOSE	1	-
13	503443203	FUEL FILTER *18-40 µm (Blue)*	1	-
14	505165901	COVER	1	-
15	586312103	ANTIVIBRATION ELEMENT	1	-
16	505128702	ANTIVIBRATION ELEMENT	1	-
17	523085501	DEFLECTION LIMITER	1	-
18	501007601	SUPPORT	1	-
19	522620003	TANK CAP ASSY	1	-
20	589241101	GASKET	1	-
21	503578901	HOLDER	1	-
22	525798103	SCREW ITXSCFT	1	-
23	577844301	DECAL	1	-
24	529578202	FUEL HOSE ASSY *From s/n 20161000481 - with magnet*	1	-
1	575388905	FRONT HANDLE	1	-
2	525798103	SCREW ITXSCFT	2	-
3	525798101	SCREW ITXSCFT	3	-
4	505129705	ANTIVIBRATION ELEMENT	1	-
1	581914802	MUFFLER KIT -	1	-
2	724128759	SCREW CRPANM -	1	-
3	505171301	SPARK ARRESTER -	1	-
4	525825106	SCREW ITXSCM *s/n from 20132500001 -*	2	-
5	577656301	SLEEVE *s/n up to - 20132499999*	2	-
6	581918501	GASKET -	1	-

Ref.	Article N.	Description	Qty	Kit
7	585178701	HEAT DEFLECTOR -	1	-
8	577902201	WASHER *s/n up to - 20132499999*	2	-
9	525762501	SCREW ITXSCM -	2	-
10	575270003	GASKET KIT *A=set of gaskets*	1	-
11	725537655	SCREW IHSCM *s/n up to - 20132499999*	2	-
1	505157501	AIR CONDUCTOR -	1	-
2	505159207	STARTER ASSY -	1	-
3	537232501	STARTER HANDLE -	1	-
4	505305125	STARTER ROPE -	1	-
5	576356601	SCREW ITXSCT -	1	-
6	537283201	SLEEVE -	1	-
7	505158101	STARTER PULLEY ASSY -	1	-
8	525887401	SCREW CITXPANT -	2	-
9	598750301	SPRING CASSETTE ASSY -	1	-
10	525824501	SCREW CITXPANMO -	4	-
11	505159102	STARTER HOUSING -	1	-
12	523035601	LABEL -	1	-
1	522795107	IGNITION MODULE ASSY *s/n up to - 20121499999 (14MHz)*	1	-
1	596214001	IGNITION MODULE *s/n from 20121500001 - (8MHz)*	1	-
2	501485404	SPARK PLUG CAP ASSY	1	-
3	525755203	SCREW ITXSCFM	2	-
4	575430601	WIRING ASSY *s/n up to - 20121499999 (14MHz)*	1	-
4	577967601	WIRING ASSY	1	-

Ref.	Article N.	Description	Qty	Kit
		s/n from 20121500001 - (8MHz)		
5	505178201	CABLE HOLDER	1	-
6	585321801	NUT	1	-
7	504872403	FLYWHEEL ASSY	1	-
8	503230042	WASHER	2	-
9	501673501	SPRING	2	-
10	501673201	PAWL	2	-
11	506006901	SCREW	2	-
12	504043505	CABLE COVER	1	-
13	503238501	SHRINKAGE HOSE	2	-
14	525887401	SCREW CITXPANT	1	-

CRANKCASE

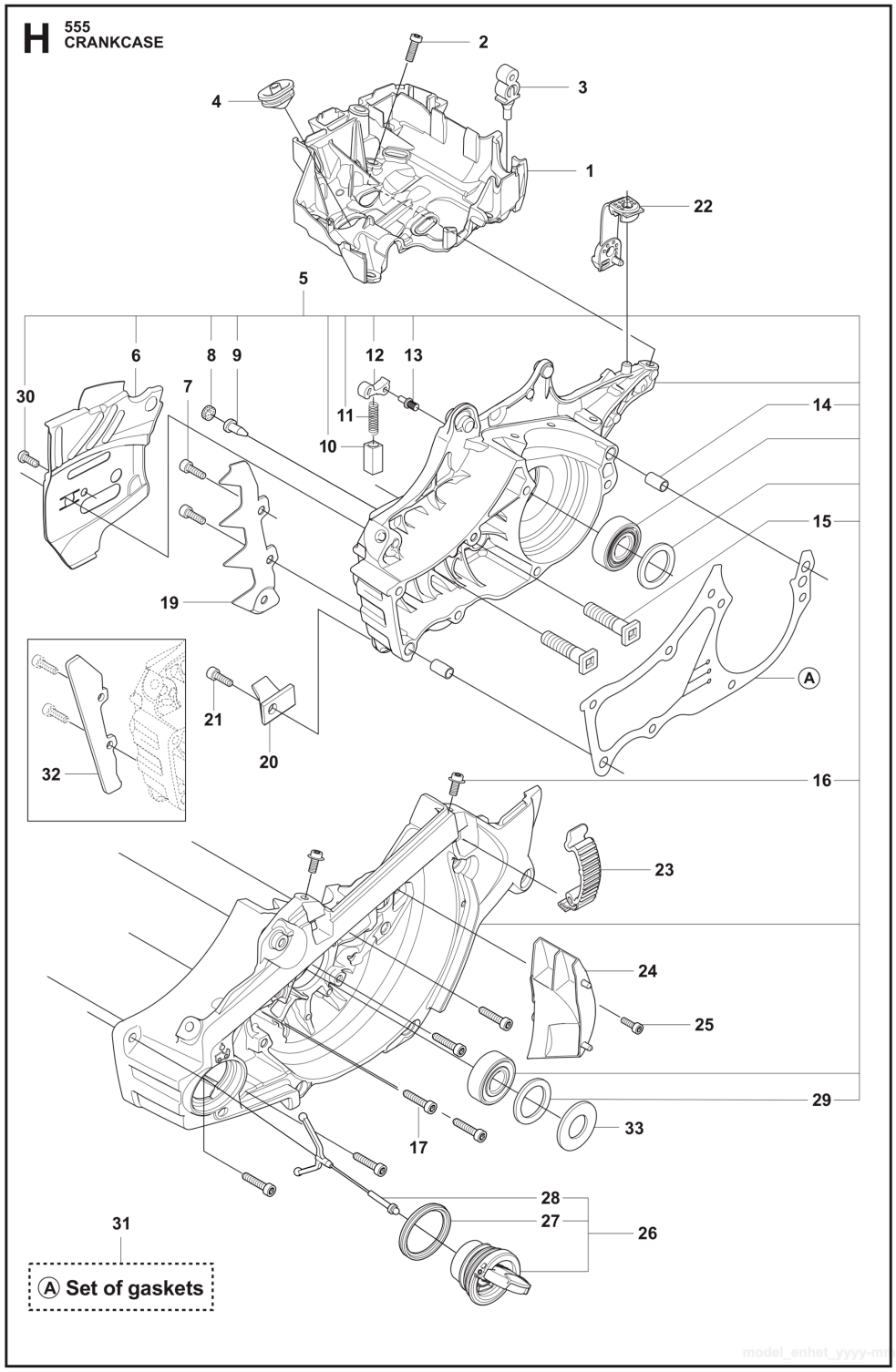

Ref.	Article N.	Description	Qty	Kit
1	575439201	TOOL -	1	-
2	522521101	COMBINATION WRENCH -	1	-
3	503558601	SPANNER -	1	-

Ref.	Article N.	Description	Qty	Kit
4	503558602	SPANNER -	1	-
5	503621201	GREASE -	1	-
6	501911401	GREASE GUN -	1	-
7	583897101	DIAGNOSTIC TOOL KIT -	1	-
8	576183401	CABLE ASSY *Diagnostics cable 14 Mhz*	1	-
9	522986502	WINTER KIT -	1	-
10	505166101	WINTER COVER -	1	-
11	503405901	WINTER PLUG -	1	-
12	503217016	SCREW CCRPANT -	2	-
13	740420100	O-RING -	2	-
14	577014003	SPIKE OUTER -	1	-
15	575793501	SCREW ITXPANM -	2	-
16	577962501	SPIKE OUTER -	1	-
17	503222401	LOCK NUT -	2	-
18	578125501	WINTER PLUG -	1	-
19	574889801	ENCLOSED KIT -	1	-
20	576952201	CABLE ASSY *Diagnostics cable 8 MHz*	1	-
21	503267201	GLUE -	1	-
22	575880701	WRENCH -	1	-
1	505126304	AIR FILTER ASSY *NYLON 80 µm Black s/n up to - 20202699999*	1	-
1	505126305	AIR FILTER ASSY *NYLON 44 µm Yellow s/n up to - 20202699999*	1	-
1	505126306	AIR FILTER ASSY	1	-

Ref.	Article N.	Description	Qty	Kit
		FELT White s/n up to - 20202699999		
1	505126307	AIR FILTER *NYLON 25 µm Orange s/n up to - 20202699999*	1	-
1	590458801	AIR FILTER *NYLON 64 µm Black s/n from 20202700001 -*	1	-
1	590458802	AIR FILTER *NYLON 25 µm Yellow s/n from 20202700001 -*	1	-
1	590458803	AIR FILTER ASSY *Non Woven Nature s/n from 20202700001 -*	1	-
2	525397905	FILTER HOLDER ASSY *s/n up to - 20202699999*	1	-
2	597275501	FILTER HOLDER ASSY *s/n from 20202700001 -*	1	-
3	505176901	SHACKLE *s/n up to - 20202699999*	1	-
4	510017202	CHOKE CONTROL ASSY	1	-
5	505156201	SCREW	1	-
6	525588101	SEALING	1	-
7	503936601	PURGE	1	-
8	574353503	SCREW ITXSCM	2	-
9	525344303	FUEL HOSE *s/n from 20173800688*	1	-
9	589357101	VENTILATING HOSE *s/n up to - 20154500384*	1	-
9	587645404	VENTILATING HOSE *s/n from 20154500385*	1	-
10	579194101	CARBURETTOR *s/n up to - 20121499999 (ZAMA EL44)*	1	-
10	501463308	CARBURETTOR KIT *From s/n 20121500001-*	1	-
11	526818101	SCREW ITXSCM	4	-
12	505165202	FLANGE	1	-
13	503226503	SQUARE NUT	2	-
14	583964103	INLET PIPE	1	-
14	583964104	INLET PIPE *Cold resistant*	1	-
15	520290901	INTERMEDIATE WALL	1	-
16	525619201	SEALING	1	-
17	525619001	SEALING	1	-
18	523056801	FUEL HOSE	1	-

Ref.	Article N.	Description	Qty	Kit
20	577536401	WIRING ASSY *s/n from 20121500001 -*	1	-
21	582025101	SUPPORT SLEEVE	1	-
22	598934501	FILTER UNIT	1	-
23	731231401	HEXAGON NUT *s/n from 20202700001 -*	1	-
1	598934701	FILTER UNIT	1	-
1	579194101	CARBURETTOR *s/n up to - 20121499999 (ZAMA EL44)*	1	-
1	501463308	CARBURETTOR KIT	1	-
4	522517401	DIAPHRAGM	1	-
5	522517501	GASKET	1	-
6	503479701	VALVE	1	-
7	503665901	LEVER	1	-
8	537383401	SPRING	1	-
12	576414201	MAIN NOZZLE	1	-
17	503481801	SCREW	3	-
21	522517801	THROTTLE LEVER	1	-
26	503535701	STRAINER	1	-
27	537383101	DIAPHRAGM PUMP	1	-
28	537403301	DIAPHRAGM	1	-
29	537020101	GASKET	1	-
32	503479001	SCREW	1	-
46	537177001	VALVE	1	-
50	522518901	GASKET KIT *B=set of gaskets*	1	-
51	582025101	SUPPORT SLEEVE	1	-
1	505200902	HAND GUARD	1	-
2	526834501	SCREW	2	-
3	577780201	BUSHING	2	-
4	505197301	NUT	2	-
5	501846104	CLUTCH COVER ASSY	1	-
6	503751801	PIN	1	-
7	526221801	SCREW CITXPANT	5	-
8	505199301	KNEE JOINT ASSY	1	-
9	503908301	BRAKE SPRING	1	-
10	505199502	BRAKE BAND ASSY	1	-
11	505201601	GUARD	1	-
12	505199703	COVER	1	-

Ref.	Article N.	Description	Qty	Kit
14	523058001	LABEL *- up to s/n 20202399999*	1	-
15	575260404	CHAIN TENSIONER KIT	1	-
16	740480702	O-RING	1	-
17	503230063	WASHER	1	-
20	537017401	BEARING SLEEVE	1	-
22	505199801	CHAIN GUIDE	1	-
1	589809002	CLUTCH ASSY	1	-
2	502164701	CLUTCH SPRING *s/n from 20164100193 -*	3	-
2	580653502	CLUTCH SPRING *s/n from 20132500001 - up to s/n 20164100192*	3	-
3	575261005	CLUTCH DRUM ASSY *- up to s/n 20202200048 .325 x7*	1	-
3	575261006	CLUTCH DRUM *- up to s/n 20202200048 3/8 x7*	1	-
3	575261009	CLUTCH DRUM ASSY	1	-
3	575261010	CLUTCH DRUM ASSY	1	-
4	501457402	RIM SPROCKET *.325x7*	1	-
4	501598002	RIM SPROCKET *3/8x7*	1	-
5	503253401	NEEDLE BEARING	1	-
6	505200801	WORM WHEEL *- up to s/n 20202200048*	1	-
6	586201701	WORM WHEEL *s/n from 20202200049 - .325*	1	-
6	587633001	WORM WHEEL *s/n from 20202200049 - 3/8*	1	-
7	505199908	OIL PUMP ASSY	1	-
8	505200202	PUMP PISTON	1	-
9	505200301	CASING	1	-
10	503230060	WASHER	2	-
11	503891601	SPRING	1	-
12	505157001	ADJUSTMENT SCREW	1	-
14	526818102	SCREW ITXSCM	2	-
15	505200402	OIL HOSE	1	-
16	504710003	OIL PLUMMET	1	-
17	720123300	PARALLEL PIN	2	-
18	503891501	SPRING	1	-
19	505200101	PUMP CYLINDER	1	-

Ref.	Article N.	Description	Qty	Kit
20	503624902	SEALING PLUG	1	-
21	598937705	CLUTCH DRUM ASSY	1	-
21	598937707	CLUTCH DRUM ASSY	1	-
1	588193901	CARBURETTOR AREA BASE	1	-
2	525755202	SCREW ITXSCFM	4	-
3	503869301	SUPPORT	2	-
4	581559201	BELLOWS	1	-
5	575380224	CRANKCASE ASSY	1	-
6	505201101	CHAIN GUIDE PLATE	1	-
7	575793501	SCREW ITXPANM	2	-
8	537403501	FILTER	1	-
9	530026119	CHECK VALVE	1	-
10	537210701	SPRING GUIDE	1	-
11	503436501	POSITION SPRING	1	-
12	505201201	CATCH	1	-
13	503751801	PIN	1	-
14	593806001	GUIDE BUSHING	2	-
15	505217301	BAR BOLT	2	-
16	525824401	SCREW ITXSCM	2	-
17	575841104	SCREW ITXSCM	6	-
19	577935201	SPIKE	1	-
20	537377902	CHAIN CATCHER	1	-
21	525798103	SCREW ITXSCFT	1	-
22	505125801	DEFLECTION LIMITER	1	-
23	595303003	SNAP LOCKING	1	-
24	588065501	AIR NOZZLE	1	-
25	526818101	SCREW ITXSCM	1	-
26	522620003	TANK CAP ASSY	1	-
27	589241101	GASKET	1	-
28	503578901	HOLDER	1	-
29	525391201	RADIAL SEAL *- up to s/n 20202399999*	1	-
30	525887401	SCREW CITXPANT	1	-
31	575270003	GASKET KIT *A=set of gaskets*	1	-
32	574889801	ENCLOSED KIT	1	-
33	596911301	PROTECTIVE CAP *- up to s/n 20224908629*	1	-
1	575545214	CRANKSHAFT ASSY	1	-

Ref.	Article N.	Description	Qty	Kit
		- up to s/n 20202399999		
2	505133505	BALL BEARING	1	-
3	525434204	BALL BEARING	1	-
4	503256302	NEEDLE BEARING	1	-
5	525391201	RADIAL SEAL *- up to s/n 20202399999*	1	-
6	505416101	RADIAL SEAL	1	-
7	575545218	CRANKSHAFT ASSY *s/n from 20202400001 -*	1	-
1	587248504	CYLINDER COVER ASSY *s/n up to - 20202699999*	1	-
2	587149501	LABEL -	1	-
3	587248703	CYLINDER COVER ASSY -	1	-
1	531008615	SPARK PLUG -	1	-
2	582392701	SCREW -	4	-
3	575276901	DECOMPRESSION VALVE -	1	-
4	503552201	PLUG -	1	-
5	576717602	SLEEVE -	4	-
6	510164901	GASKET -	1	-
7	575355806	CYLINDER ASSY -	1	-
8	584807806	PISTON ASSY -	1	-
9	505215701	PISTON RING -	1	-
10	737441000	SNAP RING -	2	-
11	503256302	NEEDLE BEARING -	1	-
12	575270003	GASKET KIT *A=set of gaskets*	1	-
13	520291101	BUSHING -	1	-
1	525887402	SCREW CITXPANT	1	-

Ref.	Article N.	Description	Qty	Kit
2	504106301	HANDLE INSERT	1	-
4	575382205	FUEL TANK ASSY	1	-
5	501152901	TANK VENT ASSY	1	-
6	544099801	THROTTLE LOCKOUT	1	-
7	544099901	SPRING	1	-
8	505157701	THROTTLE	1	-
9	720182520	PARALLEL PIN	1	-
10	521887901	THROTTLE CABLE ASSY	1	-
11	525798103	SCREW ITXSCFT	1	-
12	573993503	FUEL HOSE	1	-
13	503443203	FUEL FILTER *18-40 µm (Blue)*	1	-
14	505165901	COVER	1	-
15	586312103	ANTIVIBRATION ELEMENT	1	-
16	505128702	ANTIVIBRATION ELEMENT	1	-
17	523085501	DEFLECTION LIMITER	1	-
18	501007601	SUPPORT	1	-
19	522620003	TANK CAP ASSY	1	-
20	589241101	GASKET	1	-
21	503578901	HOLDER	1	-
22	525798103	SCREW ITXSCFT	1	-
23	577844301	DECAL	1	-
24	529578202	FUEL HOSE ASSY *From s/n 20161000481 - with magnet*	1	-
1	575388905	FRONT HANDLE	1	-
2	525798103	SCREW ITXSCFT	2	-
3	525798101	SCREW ITXSCFT	3	-
4	505129705	ANTIVIBRATION ELEMENT	1	-
1	581914802	MUFFLER KIT -	1	-
2	724128759	SCREW CRPANM -	1	-
3	505171301	SPARK ARRESTER -	1	-
4	525825106	SCREW ITXSCM *s/n from 20132500001 -*	2	-
5	577656301	SLEEVE *s/n up to - 20132499999*	2	-
6	581918501	GASKET -	1	-

Ref.	Article N.	Description	Qty	Kit
7	585178701	HEAT DEFLECTOR -	1	-
8	577902201	WASHER *s/n up to - 20132499999*	2	-
9	525762501	SCREW ITXSCM -	2	-
10	575270003	GASKET KIT *A=set of gaskets*	1	-
11	725537655	SCREW IHSCM *s/n up to - 20132499999*	2	-
1	505157501	AIR CONDUCTOR -	1	-
2	505159207	STARTER ASSY -	1	-
3	537232501	STARTER HANDLE -	1	-
4	505305125	STARTER ROPE -	1	-
5	576356601	SCREW ITXSCT -	1	-
6	537283201	SLEEVE -	1	-
7	505158101	STARTER PULLEY ASSY -	1	-
8	525887401	SCREW CITXPANT -	2	-
9	598750301	SPRING CASSETTE ASSY -	1	-
10	525824501	SCREW CITXPANMO -	4	-
11	505159102	STARTER HOUSING -	1	-
12	523035601	LABEL -	1	-
1	522795107	IGNITION MODULE ASSY *s/n up to - 20121499999 (14MHz)*	1	-
1	596214001	IGNITION MODULE *s/n from 20121500001 - (8MHz)*	1	-
2	501485404	SPARK PLUG CAP ASSY	1	-
3	525755203	SCREW ITXSCFM	2	-
4	575430601	WIRING ASSY *s/n up to - 20121499999 (14MHz)*	1	-
4	577967601	WIRING ASSY	1	-

Ref.	Article N.	Description	Qty	Kit
		s/n from 20121500001 - (8MHz)		
5	505178201	CABLE HOLDER	1	-
6	585321801	NUT	1	-
7	504872403	FLYWHEEL ASSY	1	-
8	503230042	WASHER	2	-
9	501673501	SPRING	2	-
10	501673201	PAWL	2	-
11	506006901	SCREW	2	-
12	504043505	CABLE COVER	1	-
13	503238501	SHRINKAGE HOSE	2	-
14	525887401	SCREW CITXPANT	1	-

CRANKSHAFT

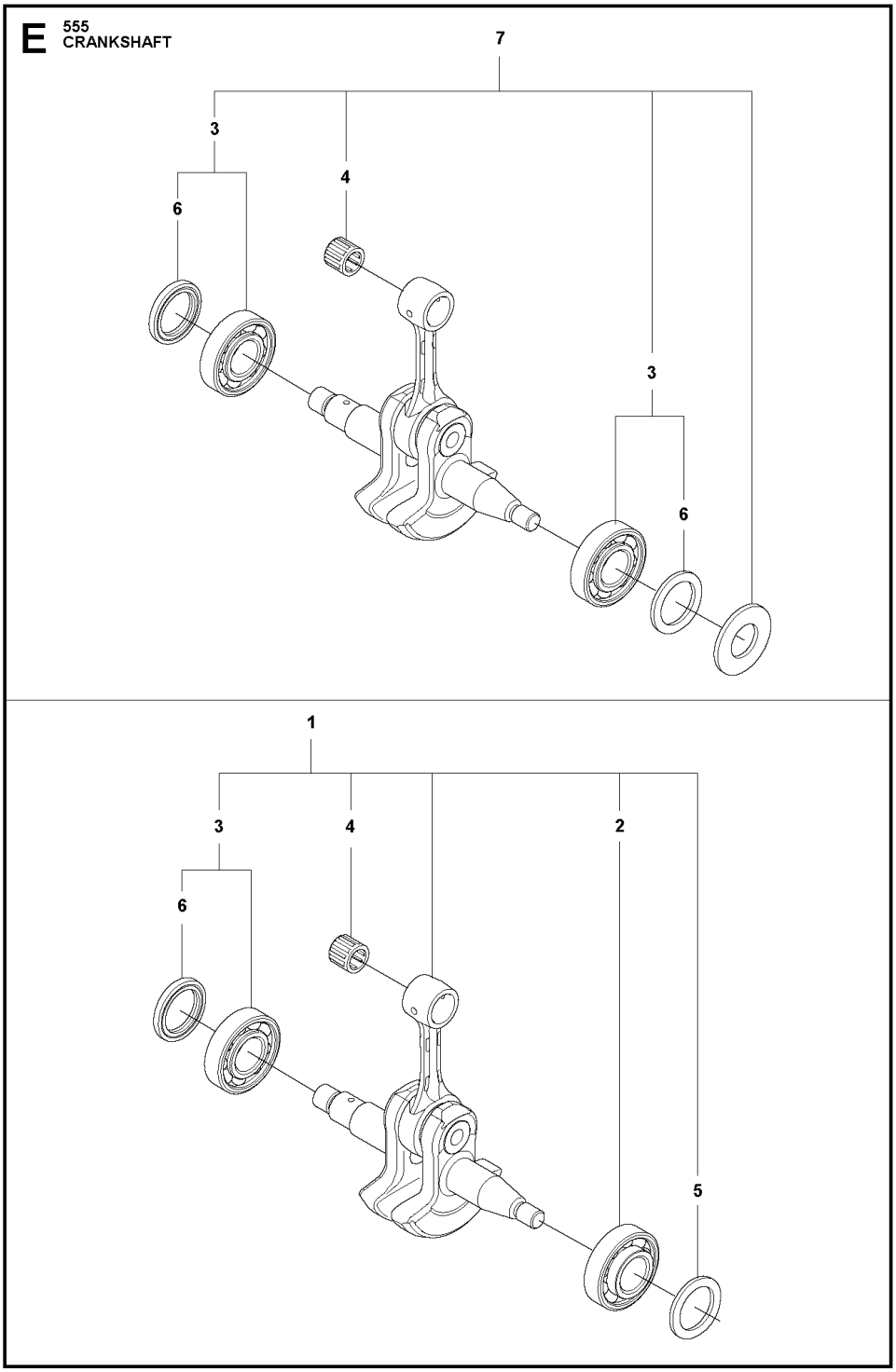

Ref.	Article N.	Description	Qty	Kit
1	575439201	TOOL -	1	-
2	522521101	COMBINATION WRENCH -	1	-
3	503558601	SPANNER -	1	-

Ref.	Article N.	Description	Qty	Kit
4	503558602	SPANNER -	1	-
5	503621201	GREASE -	1	-
6	501911401	GREASE GUN -	1	-
7	583897101	DIAGNOSTIC TOOL KIT -	1	-
8	576183401	CABLE ASSY *Diagnostics cable 14 Mhz*	1	-
9	522986502	WINTER KIT -	1	-
10	505166101	WINTER COVER -	1	-
11	503405901	WINTER PLUG -	1	-
12	503217016	SCREW CCRPANT -	2	-
13	740420100	O-RING -	2	-
14	577014003	SPIKE OUTER -	1	-
15	575793501	SCREW ITXPANM -	2	-
16	577962501	SPIKE OUTER -	1	-
17	503222401	LOCK NUT -	2	-
18	578125501	WINTER PLUG -	1	-
19	574889801	ENCLOSED KIT -	1	-
20	576952201	CABLE ASSY *Diagnostics cable 8 MHz*	1	-
21	503267201	GLUE -	1	-
22	575880701	WRENCH -	1	-
1	505126304	AIR FILTER ASSY *NYLON 80 µm Black s/n up to - 20202699999*	1	-
1	505126305	AIR FILTER ASSY *NYLON 44 µm Yellow s/n up to - 20202699999*	1	-
1	505126306	AIR FILTER ASSY	1	-

Ref.	Article N.	Description	Qty	Kit
		FELT White s/n up to - 20202699999		
1	505126307	AIR FILTER *NYLON 25 µm Orange s/n up to - 20202699999*	1	-
1	590458801	AIR FILTER *NYLON 64 µm Black s/n from 20202700001 -*	1	-
1	590458802	AIR FILTER *NYLON 25 µm Yellow s/n from 20202700001 -*	1	-
1	590458803	AIR FILTER ASSY *Non Woven Nature s/n from 20202700001 -*	1	-
2	525397905	FILTER HOLDER ASSY *s/n up to - 20202699999*	1	-
2	597275501	FILTER HOLDER ASSY *s/n from 20202700001 -*	1	-
3	505176901	SHACKLE *s/n up to - 20202699999*	1	-
4	510017202	CHOKE CONTROL ASSY	1	-
5	505156201	SCREW	1	-
6	525588101	SEALING	1	-
7	503936601	PURGE	1	-
8	574353503	SCREW ITXSCM	2	-
9	525344303	FUEL HOSE *s/n from 20173800688*	1	-
9	589357101	VENTILATING HOSE *s/n up to - 20154500384*	1	-
9	587645404	VENTILATING HOSE *s/n from 20154500385*	1	-
10	579194101	CARBURETTOR *s/n up to - 20121499999 (ZAMA EL44)*	1	-
10	501463308	CARBURETTOR KIT *From s/n 20121500001-*	1	-
11	526818101	SCREW ITXSCM	4	-
12	505165202	FLANGE	1	-
13	503226503	SQUARE NUT	2	-
14	583964103	INLET PIPE	1	-
14	583964104	INLET PIPE *Cold resistant*	1	-
15	520290901	INTERMEDIATE WALL	1	-
16	525619201	SEALING	1	-
17	525619001	SEALING	1	-
18	523056801	FUEL HOSE	1	-

Ref.	Article N.	Description	Qty	Kit
20	577536401	WIRING ASSY *s/n from 20121500001 -*	1	-
21	582025101	SUPPORT SLEEVE	1	-
22	598934501	FILTER UNIT	1	-
23	731231401	HEXAGON NUT *s/n from 20202700001 -*	1	-
1	598934701	FILTER UNIT	1	-
1	579194101	CARBURETTOR *s/n up to - 20121499999 (ZAMA EL44)*	1	-
1	501463308	CARBURETTOR KIT	1	-
4	522517401	DIAPHRAGM	1	-
5	522517501	GASKET	1	-
6	503479701	VALVE	1	-
7	503665901	LEVER	1	-
8	537383401	SPRING	1	-
12	576414201	MAIN NOZZLE	1	-
17	503481801	SCREW	3	-
21	522517801	THROTTLE LEVER	1	-
26	503535701	STRAINER	1	-
27	537383101	DIAPHRAGM PUMP	1	-
28	537403301	DIAPHRAGM	1	-
29	537020101	GASKET	1	-
32	503479001	SCREW	1	-
46	537177001	VALVE	1	-
50	522518901	GASKET KIT *B=set of gaskets*	1	-
51	582025101	SUPPORT SLEEVE	1	-
1	505200902	HAND GUARD	1	-
2	526834501	SCREW	2	-
3	577780201	BUSHING	2	-
4	505197301	NUT	2	-
5	501846104	CLUTCH COVER ASSY	1	-
6	503751801	PIN	1	-
7	526221801	SCREW CITXPANT	5	-
8	505199301	KNEE JOINT ASSY	1	-
9	503908301	BRAKE SPRING	1	-
10	505199502	BRAKE BAND ASSY	1	-
11	505201601	GUARD	1	-
12	505199703	COVER	1	-

Ref.	Article N.	Description	Qty	Kit
14	523058001	LABEL *- up to s/n 20202399999*	1	-
15	575260404	CHAIN TENSIONER KIT	1	-
16	740480702	O-RING	1	-
17	503230063	WASHER	1	-
20	537017401	BEARING SLEEVE	1	-
22	505199801	CHAIN GUIDE	1	-
1	589809002	CLUTCH ASSY	1	-
2	502164701	CLUTCH SPRING *s/n from 20164100193 -*	3	-
2	580653502	CLUTCH SPRING *s/n from 20132500001 - up to s/n 20164100192*	3	-
3	575261005	CLUTCH DRUM ASSY *- up to s/n 20202200048 .325 x7*	1	-
3	575261006	CLUTCH DRUM *- up to s/n 20202200048 3/8 x7*	1	-
3	575261009	CLUTCH DRUM ASSY	1	-
3	575261010	CLUTCH DRUM ASSY	1	-
4	501457402	RIM SPROCKET *.325x7*	1	-
4	501598002	RIM SPROCKET *3/8x7*	1	-
5	503253401	NEEDLE BEARING	1	-
6	505200801	WORM WHEEL *- up to s/n 20202200048*	1	-
6	586201701	WORM WHEEL *s/n from 20202200049 - .325*	1	-
6	587633001	WORM WHEEL *s/n from 20202200049 - 3/8*	1	-
7	505199908	OIL PUMP ASSY	1	-
8	505200202	PUMP PISTON	1	-
9	505200301	CASING	1	-
10	503230060	WASHER	2	-
11	503891601	SPRING	1	-
12	505157001	ADJUSTMENT SCREW	1	-
14	526818102	SCREW ITXSCM	2	-
15	505200402	OIL HOSE	1	-
16	504710003	OIL PLUMMET	1	-
17	720123300	PARALLEL PIN	2	-
18	503891501	SPRING	1	-
19	505200101	PUMP CYLINDER	1	-

Ref.	Article N.	Description	Qty	Kit
20	503624902	SEALING PLUG	1	-
21	598937705	CLUTCH DRUM ASSY	1	-
21	598937707	CLUTCH DRUM ASSY	1	-
1	588193901	CARBURETTOR AREA BASE	1	-
2	525755202	SCREW ITXSCFM	4	-
3	503869301	SUPPORT	2	-
4	581559201	BELLOWS	1	-
5	575380224	CRANKCASE ASSY	1	-
6	505201101	CHAIN GUIDE PLATE	1	-
7	575793501	SCREW ITXPANM	2	-
8	537403501	FILTER	1	-
9	530026119	CHECK VALVE	1	-
10	537210701	SPRING GUIDE	1	-
11	503436501	POSITION SPRING	1	-
12	505201201	CATCH	1	-
13	503751801	PIN	1	-
14	593806001	GUIDE BUSHING	2	-
15	505217301	BAR BOLT	2	-
16	525824401	SCREW ITXSCM	2	-
17	575841104	SCREW ITXSCM	6	-
19	577935201	SPIKE	1	-
20	537377902	CHAIN CATCHER	1	-
21	525798103	SCREW ITXSCFT	1	-
22	505125801	DEFLECTION LIMITER	1	-
23	595303003	SNAP LOCKING	1	-
24	588065501	AIR NOZZLE	1	-
25	526818101	SCREW ITXSCM	1	-
26	522620003	TANK CAP ASSY	1	-
27	589241101	GASKET	1	-
28	503578901	HOLDER	1	-
29	525391201	RADIAL SEAL *- up to s/n 20202399999*	1	-
30	525887401	SCREW CITXPANT	1	-
31	575270003	GASKET KIT *A=set of gaskets*	1	-
32	574889801	ENCLOSED KIT	1	-
33	596911301	PROTECTIVE CAP *- up to s/n 20224908629*	1	-
1	575545214	CRANKSHAFT ASSY	1	-

Ref.	Article N.	Description	Qty	Kit
		- up to s/n 20202399999		
2	505133505	BALL BEARING	1	-
3	525434204	BALL BEARING	1	-
4	503256302	NEEDLE BEARING	1	-
5	525391201	RADIAL SEAL *- up to s/n 20202399999*	1	-
6	505416101	RADIAL SEAL	1	-
7	575545218	CRANKSHAFT ASSY *s/n from 20202400001 -*	1	-
1	587248504	CYLINDER COVER ASSY *s/n up to - 20202699999*	1	-
2	587149501	LABEL -	1	-
3	587248703	CYLINDER COVER ASSY -	1	-
1	531008615	SPARK PLUG -	1	-
2	582392701	SCREW -	4	-
3	575276901	DECOMPRESSION VALVE -	1	-
4	503552201	PLUG -	1	-
5	576717602	SLEEVE -	4	-
6	510164901	GASKET -	1	-
7	575355806	CYLINDER ASSY -	1	-
8	584807806	PISTON ASSY -	1	-
9	505215701	PISTON RING -	1	-
10	737441000	SNAP RING -	2	-
11	503256302	NEEDLE BEARING -	1	-
12	575270003	GASKET KIT *A=set of gaskets*	1	-
13	520291101	BUSHING -	1	-
1	525887402	SCREW CITXPANT	1	-

Ref.	Article N.	Description	Qty	Kit
2	504106301	HANDLE INSERT	1	-
4	575382205	FUEL TANK ASSY	1	-
5	501152901	TANK VENT ASSY	1	-
6	544099801	THROTTLE LOCKOUT	1	-
7	544099901	SPRING	1	-
8	505157701	THROTTLE	1	-
9	720182520	PARALLEL PIN	1	-
10	521887901	THROTTLE CABLE ASSY	1	-
11	525798103	SCREW ITXSCFT	1	-
12	573993503	FUEL HOSE	1	-
13	503443203	FUEL FILTER *18-40 µm (Blue)*	1	-
14	505165901	COVER	1	-
15	586312103	ANTIVIBRATION ELEMENT	1	-
16	505128702	ANTIVIBRATION ELEMENT	1	-
17	523085501	DEFLECTION LIMITER	1	-
18	501007601	SUPPORT	1	-
19	522620003	TANK CAP ASSY	1	-
20	589241101	GASKET	1	-
21	503578901	HOLDER	1	-
22	525798103	SCREW ITXSCFT	1	-
23	577844301	DECAL	1	-
24	529578202	FUEL HOSE ASSY *From s/n 20161000481 - with magnet*	1	-
1	575388905	FRONT HANDLE	1	-
2	525798103	SCREW ITXSCFT	2	-
3	525798101	SCREW ITXSCFT	3	-
4	505129705	ANTIVIBRATION ELEMENT	1	-
1	581914802	MUFFLER KIT -	1	-
2	724128759	SCREW CRPANM -	1	-
3	505171301	SPARK ARRESTER -	1	-
4	525825106	SCREW ITXSCM *s/n from 20132500001 -*	2	-
5	577656301	SLEEVE *s/n up to - 20132499999*	2	-
6	581918501	GASKET -	1	-

Ref.	Article N.	Description	Qty	Kit
7	585178701	HEAT DEFLECTOR -	1	-
8	577902201	WASHER *s/n up to - 20132499999*	2	-
9	525762501	SCREW ITXSCM -	2	-
10	575270003	GASKET KIT *A=set of gaskets*	1	-
11	725537655	SCREW IHSCM *s/n up to - 20132499999*	2	-
1	505157501	AIR CONDUCTOR -	1	-
2	505159207	STARTER ASSY -	1	-
3	537232501	STARTER HANDLE -	1	-
4	505305125	STARTER ROPE -	1	-
5	576356601	SCREW ITXSCT -	1	-
6	537283201	SLEEVE -	1	-
7	505158101	STARTER PULLEY ASSY -	1	-
8	525887401	SCREW CITXPANT -	2	-
9	598750301	SPRING CASSETTE ASSY -	1	-
10	525824501	SCREW CITXPANMO -	4	-
11	505159102	STARTER HOUSING -	1	-
12	523035601	LABEL -	1	-
1	522795107	IGNITION MODULE ASSY *s/n up to - 20121499999 (14MHz)*	1	-
1	596214001	IGNITION MODULE *s/n from 20121500001 - (8MHz)*	1	-
2	501485404	SPARK PLUG CAP ASSY	1	-
3	525755203	SCREW ITXSCFM	2	-
4	575430601	WIRING ASSY *s/n up to - 20121499999 (14MHz)*	1	-
4	577967601	WIRING ASSY	1	-

Ref.	Article N.	Description	Qty	Kit
		s/n from 20121500001 - (8MHz)		
5	505178201	CABLE HOLDER	1	-
6	585321801	NUT	1	-
7	504872403	FLYWHEEL ASSY	1	-
8	503230042	WASHER	2	-
9	501673501	SPRING	2	-
10	501673201	PAWL	2	-
11	506006901	SCREW	2	-
12	504043505	CABLE COVER	1	-
13	503238501	SHRINKAGE HOSE	2	-
14	525887401	SCREW CITXPANT	1	-

CYLINDER COVER

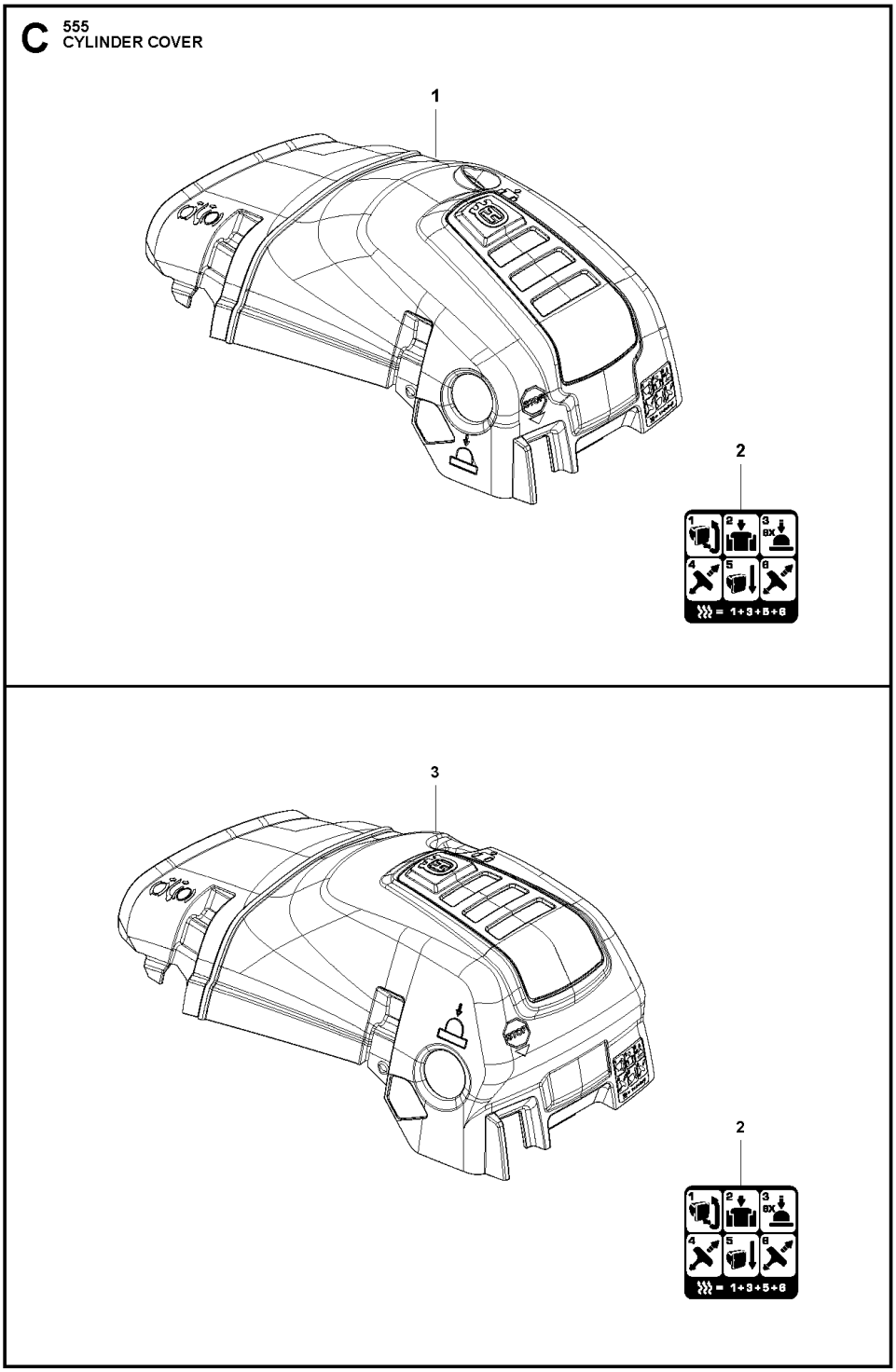

Ref.	Article N.	Description	Qty	Kit
1	575439201	TOOL -	1	-
2	522521101	COMBINATION WRENCH -	1	-
3	503558601	SPANNER -	1	-

Ref.	Article N.	Description	Qty	Kit
4	503558602	SPANNER -	1	-
5	503621201	GREASE -	1	-
6	501911401	GREASE GUN -	1	-
7	583897101	DIAGNOSTIC TOOL KIT -	1	-
8	576183401	CABLE ASSY *Diagnostics cable 14 Mhz*	1	-
9	522986502	WINTER KIT -	1	-
10	505166101	WINTER COVER -	1	-
11	503405901	WINTER PLUG -	1	-
12	503217016	SCREW CCRPANT -	2	-
13	740420100	O-RING -	2	-
14	577014003	SPIKE OUTER -	1	-
15	575793501	SCREW ITXPANM -	2	-
16	577962501	SPIKE OUTER -	1	-
17	503222401	LOCK NUT -	2	-
18	578125501	WINTER PLUG -	1	-
19	574889801	ENCLOSED KIT -	1	-
20	576952201	CABLE ASSY *Diagnostics cable 8 MHz*	1	-
21	503267201	GLUE -	1	-
22	575880701	WRENCH -	1	-
1	505126304	AIR FILTER ASSY *NYLON 80 µm Black s/n up to - 20202699999*	1	-
1	505126305	AIR FILTER ASSY *NYLON 44 µm Yellow s/n up to - 20202699999*	1	-
1	505126306	AIR FILTER ASSY	1	-

Ref.	Article N.	Description	Qty	Kit
		FELT White s/n up to - 20202699999		
1	505126307	AIR FILTER *NYLON 25 µm Orange s/n up to - 20202699999*	1	-
1	590458801	AIR FILTER *NYLON 64 µm Black s/n from 20202700001 -*	1	-
1	590458802	AIR FILTER *NYLON 25 µm Yellow s/n from 20202700001 -*	1	-
1	590458803	AIR FILTER ASSY *Non Woven Nature s/n from 20202700001 -*	1	-
2	525397905	FILTER HOLDER ASSY *s/n up to - 20202699999*	1	-
2	597275501	FILTER HOLDER ASSY *s/n from 20202700001 -*	1	-
3	505176901	SHACKLE *s/n up to - 20202699999*	1	-
4	510017202	CHOKE CONTROL ASSY	1	-
5	505156201	SCREW	1	-
6	525588101	SEALING	1	-
7	503936601	PURGE	1	-
8	574353503	SCREW ITXSCM	2	-
9	525344303	FUEL HOSE *s/n from 20173800688*	1	-
9	589357101	VENTILATING HOSE *s/n up to - 20154500384*	1	-
9	587645404	VENTILATING HOSE *s/n from 20154500385*	1	-
10	579194101	CARBURETTOR *s/n up to - 20121499999 (ZAMA EL44)*	1	-
10	501463308	CARBURETTOR KIT *From s/n 20121500001-*	1	-
11	526818101	SCREW ITXSCM	4	-
12	505165202	FLANGE	1	-
13	503226503	SQUARE NUT	2	-
14	583964103	INLET PIPE	1	-
14	583964104	INLET PIPE *Cold resistant*	1	-
15	520290901	INTERMEDIATE WALL	1	-
16	525619201	SEALING	1	-
17	525619001	SEALING	1	-
18	523056801	FUEL HOSE	1	-

Ref.	Article N.	Description	Qty	Kit
20	577536401	WIRING ASSY *s/n from 20121500001 -*	1	-
21	582025101	SUPPORT SLEEVE	1	-
22	598934501	FILTER UNIT	1	-
23	731231401	HEXAGON NUT *s/n from 20202700001 -*	1	-
1	598934701	FILTER UNIT	1	-
1	579194101	CARBURETTOR *s/n up to - 20121499999 (ZAMA EL44)*	1	-
1	501463308	CARBURETTOR KIT	1	-
4	522517401	DIAPHRAGM	1	-
5	522517501	GASKET	1	-
6	503479701	VALVE	1	-
7	503665901	LEVER	1	-
8	537383401	SPRING	1	-
12	576414201	MAIN NOZZLE	1	-
17	503481801	SCREW	3	-
21	522517801	THROTTLE LEVER	1	-
26	503535701	STRAINER	1	-
27	537383101	DIAPHRAGM PUMP	1	-
28	537403301	DIAPHRAGM	1	-
29	537020101	GASKET	1	-
32	503479001	SCREW	1	-
46	537177001	VALVE	1	-
50	522518901	GASKET KIT *B=set of gaskets*	1	-
51	582025101	SUPPORT SLEEVE	1	-
1	505200902	HAND GUARD	1	-
2	526834501	SCREW	2	-
3	577780201	BUSHING	2	-
4	505197301	NUT	2	-
5	501846104	CLUTCH COVER ASSY	1	-
6	503751801	PIN	1	-
7	526221801	SCREW CITXPANT	5	-
8	505199301	KNEE JOINT ASSY	1	-
9	503908301	BRAKE SPRING	1	-
10	505199502	BRAKE BAND ASSY	1	-
11	505201601	GUARD	1	-
12	505199703	COVER	1	-

Ref.	Article N.	Description	Qty	Kit
14	523058001	LABEL *- up to s/n 20202399999*	1	-
15	575260404	CHAIN TENSIONER KIT	1	-
16	740480702	O-RING	1	-
17	503230063	WASHER	1	-
20	537017401	BEARING SLEEVE	1	-
22	505199801	CHAIN GUIDE	1	-
1	589809002	CLUTCH ASSY	1	-
2	502164701	CLUTCH SPRING *s/n from 20164100193 -*	3	-
2	580653502	CLUTCH SPRING *s/n from 20132500001 - up to s/n 20164100192*	3	-
3	575261005	CLUTCH DRUM ASSY *- up to s/n 20202200048 .325 x7*	1	-
3	575261006	CLUTCH DRUM *- up to s/n 20202200048 3/8 x7*	1	-
3	575261009	CLUTCH DRUM ASSY	1	-
3	575261010	CLUTCH DRUM ASSY	1	-
4	501457402	RIM SPROCKET *.325x7*	1	-
4	501598002	RIM SPROCKET *3/8x7*	1	-
5	503253401	NEEDLE BEARING	1	-
6	505200801	WORM WHEEL *- up to s/n 20202200048*	1	-
6	586201701	WORM WHEEL *s/n from 20202200049 - .325*	1	-
6	587633001	WORM WHEEL *s/n from 20202200049 - 3/8*	1	-
7	505199908	OIL PUMP ASSY	1	-
8	505200202	PUMP PISTON	1	-
9	505200301	CASING	1	-
10	503230060	WASHER	2	-
11	503891601	SPRING	1	-
12	505157001	ADJUSTMENT SCREW	1	-
14	526818102	SCREW ITXSCM	2	-
15	505200402	OIL HOSE	1	-
16	504710003	OIL PLUMMET	1	-
17	720123300	PARALLEL PIN	2	-
18	503891501	SPRING	1	-
19	505200101	PUMP CYLINDER	1	-

Ref.	Article N.	Description	Qty	Kit
20	503624902	SEALING PLUG	1	-
21	598937705	CLUTCH DRUM ASSY	1	-
21	598937707	CLUTCH DRUM ASSY	1	-
1	588193901	CARBURETTOR AREA BASE	1	-
2	525755202	SCREW ITXSCFM	4	-
3	503869301	SUPPORT	2	-
4	581559201	BELLOWS	1	-
5	575380224	CRANKCASE ASSY	1	-
6	505201101	CHAIN GUIDE PLATE	1	-
7	575793501	SCREW ITXPANM	2	-
8	537403501	FILTER	1	-
9	530026119	CHECK VALVE	1	-
10	537210701	SPRING GUIDE	1	-
11	503436501	POSITION SPRING	1	-
12	505201201	CATCH	1	-
13	503751801	PIN	1	-
14	593806001	GUIDE BUSHING	2	-
15	505217301	BAR BOLT	2	-
16	525824401	SCREW ITXSCM	2	-
17	575841104	SCREW ITXSCM	6	-
19	577935201	SPIKE	1	-
20	537377902	CHAIN CATCHER	1	-
21	525798103	SCREW ITXSCFT	1	-
22	505125801	DEFLECTION LIMITER	1	-
23	595303003	SNAP LOCKING	1	-
24	588065501	AIR NOZZLE	1	-
25	526818101	SCREW ITXSCM	1	-
26	522620003	TANK CAP ASSY	1	-
27	589241101	GASKET	1	-
28	503578901	HOLDER	1	-
29	525391201	RADIAL SEAL *- up to s/n 20202399999*	1	-
30	525887401	SCREW CITXPANT	1	-
31	575270003	GASKET KIT *A=set of gaskets*	1	-
32	574889801	ENCLOSED KIT	1	-
33	596911301	PROTECTIVE CAP *- up to s/n 20224908629*	1	-
1	575545214	CRANKSHAFT ASSY	1	-

Ref.	Article N.	Description	Qty	Kit
		- up to s/n 20202399999		
2	505133505	BALL BEARING	1	-
3	525434204	BALL BEARING	1	-
4	503256302	NEEDLE BEARING	1	-
5	525391201	RADIAL SEAL *- up to s/n 20202399999*	1	-
6	505416101	RADIAL SEAL	1	-
7	575545218	CRANKSHAFT ASSY *s/n from 20202400001 -*	1	-
1	587248504	CYLINDER COVER ASSY *s/n up to - 20202699999*	1	-
2	587149501	LABEL -	1	-
3	587248703	CYLINDER COVER ASSY -	1	-
1	531008615	SPARK PLUG -	1	-
2	582392701	SCREW -	4	-
3	575276901	DECOMPRESSION VALVE -	1	-
4	503552201	PLUG -	1	-
5	576717602	SLEEVE -	4	-
6	510164901	GASKET -	1	-
7	575355806	CYLINDER ASSY -	1	-
8	584807806	PISTON ASSY -	1	-
9	505215701	PISTON RING -	1	-
10	737441000	SNAP RING -	2	-
11	503256302	NEEDLE BEARING -	1	-
12	575270003	GASKET KIT *A=set of gaskets*	1	-
13	520291101	BUSHING -	1	-
1	525887402	SCREW CITXPANT	1	-

Ref.	Article N.	Description	Qty	Kit
2	504106301	HANDLE INSERT	1	-
4	575382205	FUEL TANK ASSY	1	-
5	501152901	TANK VENT ASSY	1	-
6	544099801	THROTTLE LOCKOUT	1	-
7	544099901	SPRING	1	-
8	505157701	THROTTLE	1	-
9	720182520	PARALLEL PIN	1	-
10	521887901	THROTTLE CABLE ASSY	1	-
11	525798103	SCREW ITXSCFT	1	-
12	573993503	FUEL HOSE	1	-
13	503443203	FUEL FILTER *18-40 µm (Blue)*	1	-
14	505165901	COVER	1	-
15	586312103	ANTIVIBRATION ELEMENT	1	-
16	505128702	ANTIVIBRATION ELEMENT	1	-
17	523085501	DEFLECTION LIMITER	1	-
18	501007601	SUPPORT	1	-
19	522620003	TANK CAP ASSY	1	-
20	589241101	GASKET	1	-
21	503578901	HOLDER	1	-
22	525798103	SCREW ITXSCFT	1	-
23	577844301	DECAL	1	-
24	529578202	FUEL HOSE ASSY *From s/n 20161000481 - with magnet*	1	-
1	575388905	FRONT HANDLE	1	-
2	525798103	SCREW ITXSCFT	2	-
3	525798101	SCREW ITXSCFT	3	-
4	505129705	ANTIVIBRATION ELEMENT	1	-
1	581914802	MUFFLER KIT -	1	-
2	724128759	SCREW CRPANM -	1	-
3	505171301	SPARK ARRESTER -	1	-
4	525825106	SCREW ITXSCM *s/n from 20132500001 -*	2	-
5	577656301	SLEEVE *s/n up to - 20132499999*	2	-
6	581918501	GASKET -	1	-

Ref.	Article N.	Description	Qty	Kit
7	585178701	HEAT DEFLECTOR -	1	-
8	577902201	WASHER *s/n up to - 20132499999*	2	-
9	525762501	SCREW ITXSCM -	2	-
10	575270003	GASKET KIT *A=set of gaskets*	1	-
11	725537655	SCREW IHSCM *s/n up to - 20132499999*	2	-
1	505157501	AIR CONDUCTOR -	1	-
2	505159207	STARTER ASSY -	1	-
3	537232501	STARTER HANDLE -	1	-
4	505305125	STARTER ROPE -	1	-
5	576356601	SCREW ITXSCT -	1	-
6	537283201	SLEEVE -	1	-
7	505158101	STARTER PULLEY ASSY -	1	-
8	525887401	SCREW CITXPANT -	2	-
9	598750301	SPRING CASSETTE ASSY -	1	-
10	525824501	SCREW CITXPANMO -	4	-
11	505159102	STARTER HOUSING -	1	-
12	523035601	LABEL -	1	-
1	522795107	IGNITION MODULE ASSY *s/n up to - 20121499999 (14MHz)*	1	-
1	596214001	IGNITION MODULE *s/n from 20121500001 - (8MHz)*	1	-
2	501485404	SPARK PLUG CAP ASSY	1	-
3	525755203	SCREW ITXSCFM	2	-
4	575430601	WIRING ASSY *s/n up to - 20121499999 (14MHz)*	1	-
4	577967601	WIRING ASSY	1	-

Ref.	Article N.	Description	Qty	Kit
		s/n from 20121500001 - (8MHz)		
5	505178201	CABLE HOLDER	1	-
6	585321801	NUT	1	-
7	504872403	FLYWHEEL ASSY	1	-
8	503230042	WASHER	2	-
9	501673501	SPRING	2	-
10	501673201	PAWL	2	-
11	506006901	SCREW	2	-
12	504043505	CABLE COVER	1	-
13	503238501	SHRINKAGE HOSE	2	-
14	525887401	SCREW CITXPANT	1	-

CYLINDER PISTON

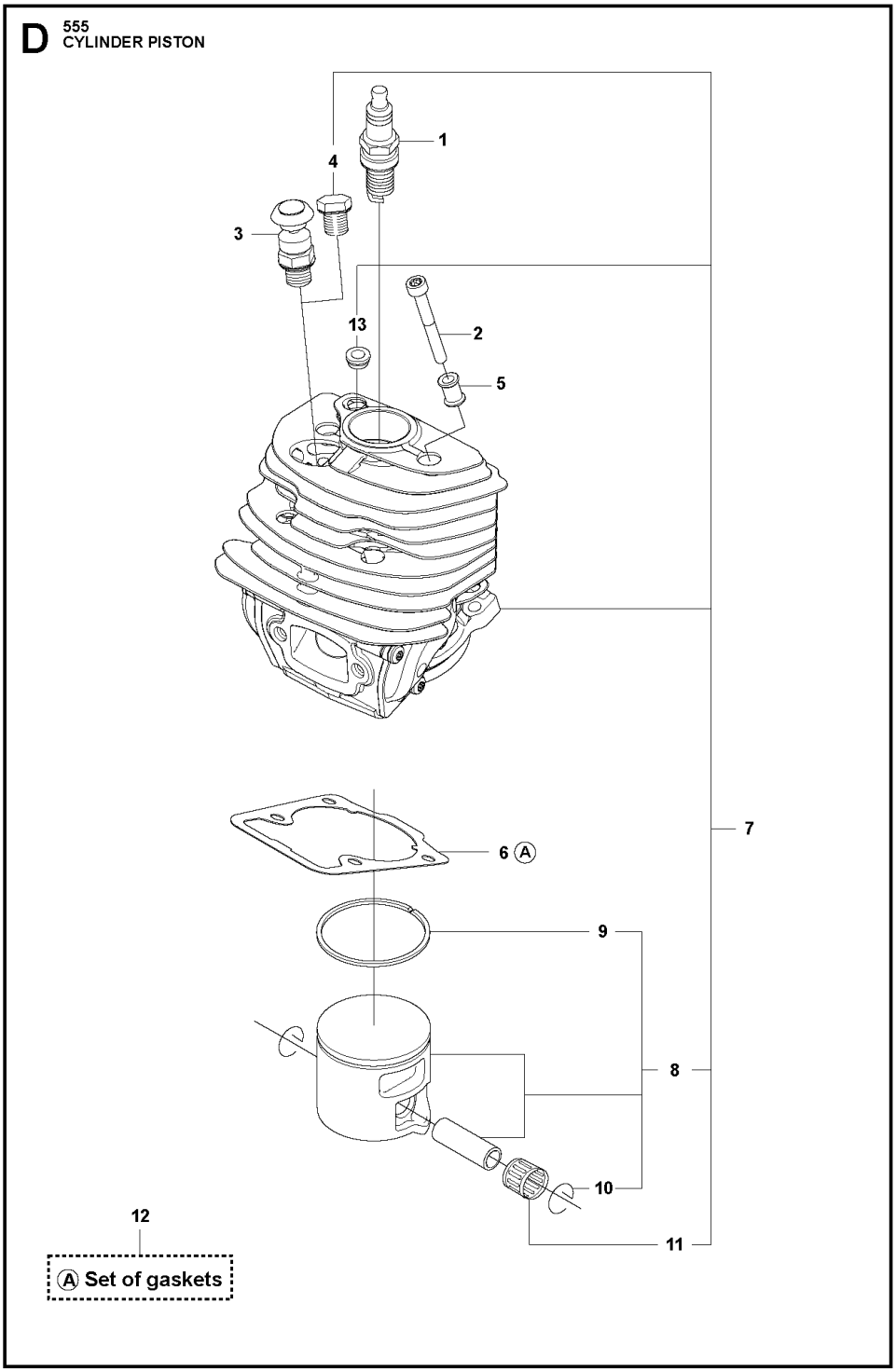

Ref.	Article N.	Description	Qty	Kit
1	575439201	TOOL -	1	-
2	522521101	COMBINATION WRENCH -	1	-
3	503558601	SPANNER -	1	-

Ref.	Article N.	Description	Qty	Kit
4	503558602	SPANNER -	1	-
5	503621201	GREASE -	1	-
6	501911401	GREASE GUN -	1	-
7	583897101	DIAGNOSTIC TOOL KIT -	1	-
8	576183401	CABLE ASSY *Diagnostics cable 14 Mhz*	1	-
9	522986502	WINTER KIT -	1	-
10	505166101	WINTER COVER -	1	-
11	503405901	WINTER PLUG -	1	-
12	503217016	SCREW CCRPANT -	2	-
13	740420100	O-RING -	2	-
14	577014003	SPIKE OUTER -	1	-
15	575793501	SCREW ITXPANM -	2	-
16	577962501	SPIKE OUTER -	1	-
17	503222401	LOCK NUT -	2	-
18	578125501	WINTER PLUG -	1	-
19	574889801	ENCLOSED KIT -	1	-
20	576952201	CABLE ASSY *Diagnostics cable 8 MHz*	1	-
21	503267201	GLUE -	1	-
22	575880701	WRENCH -	1	-
1	505126304	AIR FILTER ASSY *NYLON 80 µm Black s/n up to - 20202699999*	1	-
1	505126305	AIR FILTER ASSY *NYLON 44 µm Yellow s/n up to - 20202699999*	1	-
1	505126306	AIR FILTER ASSY	1	-

Ref.	Article N.	Description	Qty	Kit
		FELT White s/n up to - 20202699999		
1	505126307	AIR FILTER *NYLON 25 µm Orange s/n up to - 20202699999*	1	-
1	590458801	AIR FILTER *NYLON 64 µm Black s/n from 20202700001 -*	1	-
1	590458802	AIR FILTER *NYLON 25 µm Yellow s/n from 20202700001 -*	1	-
1	590458803	AIR FILTER ASSY *Non Woven Nature s/n from 20202700001 -*	1	-
2	525397905	FILTER HOLDER ASSY *s/n up to - 20202699999*	1	-
2	597275501	FILTER HOLDER ASSY *s/n from 20202700001 -*	1	-
3	505176901	SHACKLE *s/n up to - 20202699999*	1	-
4	510017202	CHOKE CONTROL ASSY	1	-
5	505156201	SCREW	1	-
6	525588101	SEALING	1	-
7	503936601	PURGE	1	-
8	574353503	SCREW ITXSCM	2	-
9	525344303	FUEL HOSE *s/n from 20173800688*	1	-
9	589357101	VENTILATING HOSE *s/n up to - 20154500384*	1	-
9	587645404	VENTILATING HOSE *s/n from 20154500385*	1	-
10	579194101	CARBURETTOR *s/n up to - 20121499999 (ZAMA EL44)*	1	-
10	501463308	CARBURETTOR KIT *From s/n 20121500001-*	1	-
11	526818101	SCREW ITXSCM	4	-
12	505165202	FLANGE	1	-
13	503226503	SQUARE NUT	2	-
14	583964103	INLET PIPE	1	-
14	583964104	INLET PIPE *Cold resistant*	1	-
15	520290901	INTERMEDIATE WALL	1	-
16	525619201	SEALING	1	-
17	525619001	SEALING	1	-
18	523056801	FUEL HOSE	1	-

Ref.	Article N.	Description	Qty	Kit
20	577536401	WIRING ASSY *s/n from 20121500001 -*	1	-
21	582025101	SUPPORT SLEEVE	1	-
22	598934501	FILTER UNIT	1	-
23	731231401	HEXAGON NUT *s/n from 20202700001 -*	1	-
1	598934701	FILTER UNIT	1	-
1	579194101	CARBURETTOR *s/n up to - 20121499999 (ZAMA EL44)*	1	-
1	501463308	CARBURETTOR KIT	1	-
4	522517401	DIAPHRAGM	1	-
5	522517501	GASKET	1	-
6	503479701	VALVE	1	-
7	503665901	LEVER	1	-
8	537383401	SPRING	1	-
12	576414201	MAIN NOZZLE	1	-
17	503481801	SCREW	3	-
21	522517801	THROTTLE LEVER	1	-
26	503535701	STRAINER	1	-
27	537383101	DIAPHRAGM PUMP	1	-
28	537403301	DIAPHRAGM	1	-
29	537020101	GASKET	1	-
32	503479001	SCREW	1	-
46	537177001	VALVE	1	-
50	522518901	GASKET KIT *B=set of gaskets*	1	-
51	582025101	SUPPORT SLEEVE	1	-
1	505200902	HAND GUARD	1	-
2	526834501	SCREW	2	-
3	577780201	BUSHING	2	-
4	505197301	NUT	2	-
5	501846104	CLUTCH COVER ASSY	1	-
6	503751801	PIN	1	-
7	526221801	SCREW CITXPANT	5	-
8	505199301	KNEE JOINT ASSY	1	-
9	503908301	BRAKE SPRING	1	-
10	505199502	BRAKE BAND ASSY	1	-
11	505201601	GUARD	1	-
12	505199703	COVER	1	-

Ref.	Article N.	Description	Qty	Kit
14	523058001	LABEL *- up to s/n 20202399999*	1	-
15	575260404	CHAIN TENSIONER KIT	1	-
16	740480702	O-RING	1	-
17	503230063	WASHER	1	-
20	537017401	BEARING SLEEVE	1	-
22	505199801	CHAIN GUIDE	1	-
1	589809002	CLUTCH ASSY	1	-
2	502164701	CLUTCH SPRING *s/n from 20164100193 -*	3	-
2	580653502	CLUTCH SPRING *s/n from 20132500001 - up to s/n 20164100192*	3	-
3	575261005	CLUTCH DRUM ASSY *- up to s/n 20202200048 .325 x7*	1	-
3	575261006	CLUTCH DRUM *- up to s/n 20202200048 3/8 x7*	1	-
3	575261009	CLUTCH DRUM ASSY	1	-
3	575261010	CLUTCH DRUM ASSY	1	-
4	501457402	RIM SPROCKET *.325x7*	1	-
4	501598002	RIM SPROCKET *3/8x7*	1	-
5	503253401	NEEDLE BEARING	1	-
6	505200801	WORM WHEEL *- up to s/n 20202200048*	1	-
6	586201701	WORM WHEEL *s/n from 20202200049 - .325*	1	-
6	587633001	WORM WHEEL *s/n from 20202200049 - 3/8*	1	-
7	505199908	OIL PUMP ASSY	1	-
8	505200202	PUMP PISTON	1	-
9	505200301	CASING	1	-
10	503230060	WASHER	2	-
11	503891601	SPRING	1	-
12	505157001	ADJUSTMENT SCREW	1	-
14	526818102	SCREW ITXSCM	2	-
15	505200402	OIL HOSE	1	-
16	504710003	OIL PLUMMET	1	-
17	720123300	PARALLEL PIN	2	-
18	503891501	SPRING	1	-
19	505200101	PUMP CYLINDER	1	-

Ref.	Article N.	Description	Qty	Kit
20	503624902	SEALING PLUG	1	-
21	598937705	CLUTCH DRUM ASSY	1	-
21	598937707	CLUTCH DRUM ASSY	1	-
1	588193901	CARBURETTOR AREA BASE	1	-
2	525755202	SCREW ITXSCFM	4	-
3	503869301	SUPPORT	2	-
4	581559201	BELLOWS	1	-
5	575380224	CRANKCASE ASSY	1	-
6	505201101	CHAIN GUIDE PLATE	1	-
7	575793501	SCREW ITXPANM	2	-
8	537403501	FILTER	1	-
9	530026119	CHECK VALVE	1	-
10	537210701	SPRING GUIDE	1	-
11	503436501	POSITION SPRING	1	-
12	505201201	CATCH	1	-
13	503751801	PIN	1	-
14	593806001	GUIDE BUSHING	2	-
15	505217301	BAR BOLT	2	-
16	525824401	SCREW ITXSCM	2	-
17	575841104	SCREW ITXSCM	6	-
19	577935201	SPIKE	1	-
20	537377902	CHAIN CATCHER	1	-
21	525798103	SCREW ITXSCFT	1	-
22	505125801	DEFLECTION LIMITER	1	-
23	595303003	SNAP LOCKING	1	-
24	588065501	AIR NOZZLE	1	-
25	526818101	SCREW ITXSCM	1	-
26	522620003	TANK CAP ASSY	1	-
27	589241101	GASKET	1	-
28	503578901	HOLDER	1	-
29	525391201	RADIAL SEAL *- up to s/n 20202399999*	1	-
30	525887401	SCREW CITXPANT	1	-
31	575270003	GASKET KIT *A=set of gaskets*	1	-
32	574889801	ENCLOSED KIT	1	-
33	596911301	PROTECTIVE CAP *- up to s/n 20224908629*	1	-
1	575545214	CRANKSHAFT ASSY	1	-

Ref.	Article N.	Description	Qty	Kit
		- up to s/n 20202399999		
2	505133505	BALL BEARING	1	-
3	525434204	BALL BEARING	1	-
4	503256302	NEEDLE BEARING	1	-
5	525391201	RADIAL SEAL *- up to s/n 20202399999*	1	-
6	505416101	RADIAL SEAL	1	-
7	575545218	CRANKSHAFT ASSY *s/n from 20202400001 -*	1	-
1	587248504	CYLINDER COVER ASSY *s/n up to - 20202699999*	1	-
2	587149501	LABEL -	1	-
3	587248703	CYLINDER COVER ASSY -	1	-
1	531008615	SPARK PLUG -	1	-
2	582392701	SCREW -	4	-
3	575276901	DECOMPRESSION VALVE -	1	-
4	503552201	PLUG -	1	-
5	576717602	SLEEVE -	4	-
6	510164901	GASKET -	1	-
7	575355806	CYLINDER ASSY -	1	-
8	584807806	PISTON ASSY -	1	-
9	505215701	PISTON RING -	1	-
10	737441000	SNAP RING -	2	-
11	503256302	NEEDLE BEARING -	1	-
12	575270003	GASKET KIT *A=set of gaskets*	1	-
13	520291101	BUSHING -	1	-
1	525887402	SCREW CITXPANT	1	-

Ref.	Article N.	Description	Qty	Kit
2	504106301	HANDLE INSERT	1	-
4	575382205	FUEL TANK ASSY	1	-
5	501152901	TANK VENT ASSY	1	-
6	544099801	THROTTLE LOCKOUT	1	-
7	544099901	SPRING	1	-
8	505157701	THROTTLE	1	-
9	720182520	PARALLEL PIN	1	-
10	521887901	THROTTLE CABLE ASSY	1	-
11	525798103	SCREW ITXSCFT	1	-
12	573993503	FUEL HOSE	1	-
13	503443203	FUEL FILTER *18-40 µm (Blue)*	1	-
14	505165901	COVER	1	-
15	586312103	ANTIVIBRATION ELEMENT	1	-
16	505128702	ANTIVIBRATION ELEMENT	1	-
17	523085501	DEFLECTION LIMITER	1	-
18	501007601	SUPPORT	1	-
19	522620003	TANK CAP ASSY	1	-
20	589241101	GASKET	1	-
21	503578901	HOLDER	1	-
22	525798103	SCREW ITXSCFT	1	-
23	577844301	DECAL	1	-
24	529578202	FUEL HOSE ASSY *From s/n 20161000481 - with magnet*	1	-
1	575388905	FRONT HANDLE	1	-
2	525798103	SCREW ITXSCFT	2	-
3	525798101	SCREW ITXSCFT	3	-
4	505129705	ANTIVIBRATION ELEMENT	1	-
1	581914802	MUFFLER KIT -	1	-
2	724128759	SCREW CRPANM -	1	-
3	505171301	SPARK ARRESTER -	1	-
4	525825106	SCREW ITXSCM *s/n from 20132500001 -*	2	-
5	577656301	SLEEVE *s/n up to - 20132499999*	2	-
6	581918501	GASKET -	1	-

Ref.	Article N.	Description	Qty	Kit
7	585178701	HEAT DEFLECTOR -	1	-
8	577902201	WASHER *s/n up to - 20132499999*	2	-
9	525762501	SCREW ITXSCM -	2	-
10	575270003	GASKET KIT *A=set of gaskets*	1	-
11	725537655	SCREW IHSCM *s/n up to - 20132499999*	2	-
1	505157501	AIR CONDUCTOR -	1	-
2	505159207	STARTER ASSY -	1	-
3	537232501	STARTER HANDLE -	1	-
4	505305125	STARTER ROPE -	1	-
5	576356601	SCREW ITXSCT -	1	-
6	537283201	SLEEVE -	1	-
7	505158101	STARTER PULLEY ASSY -	1	-
8	525887401	SCREW CITXPANT -	2	-
9	598750301	SPRING CASSETTE ASSY -	1	-
10	525824501	SCREW CITXPANMO -	4	-
11	505159102	STARTER HOUSING -	1	-
12	523035601	LABEL -	1	-
1	522795107	IGNITION MODULE ASSY *s/n up to - 20121499999 (14MHz)*	1	-
1	596214001	IGNITION MODULE *s/n from 20121500001 - (8MHz)*	1	-
2	501485404	SPARK PLUG CAP ASSY	1	-
3	525755203	SCREW ITXSCFM	2	-
4	575430601	WIRING ASSY *s/n up to - 20121499999 (14MHz)*	1	-
4	577967601	WIRING ASSY	1	-

Ref.	Article N.	Description	Qty	Kit
		s/n from 20121500001 - (8MHz)		
5	505178201	CABLE HOLDER	1	-
6	585321801	NUT	1	-
7	504872403	FLYWHEEL ASSY	1	-
8	503230042	WASHER	2	-
9	501673501	SPRING	2	-
10	501673201	PAWL	2	-
11	506006901	SCREW	2	-
12	504043505	CABLE COVER	1	-
13	503238501	SHRINKAGE HOSE	2	-
14	525887401	SCREW CITXPANT	1	-

FUEL TANK

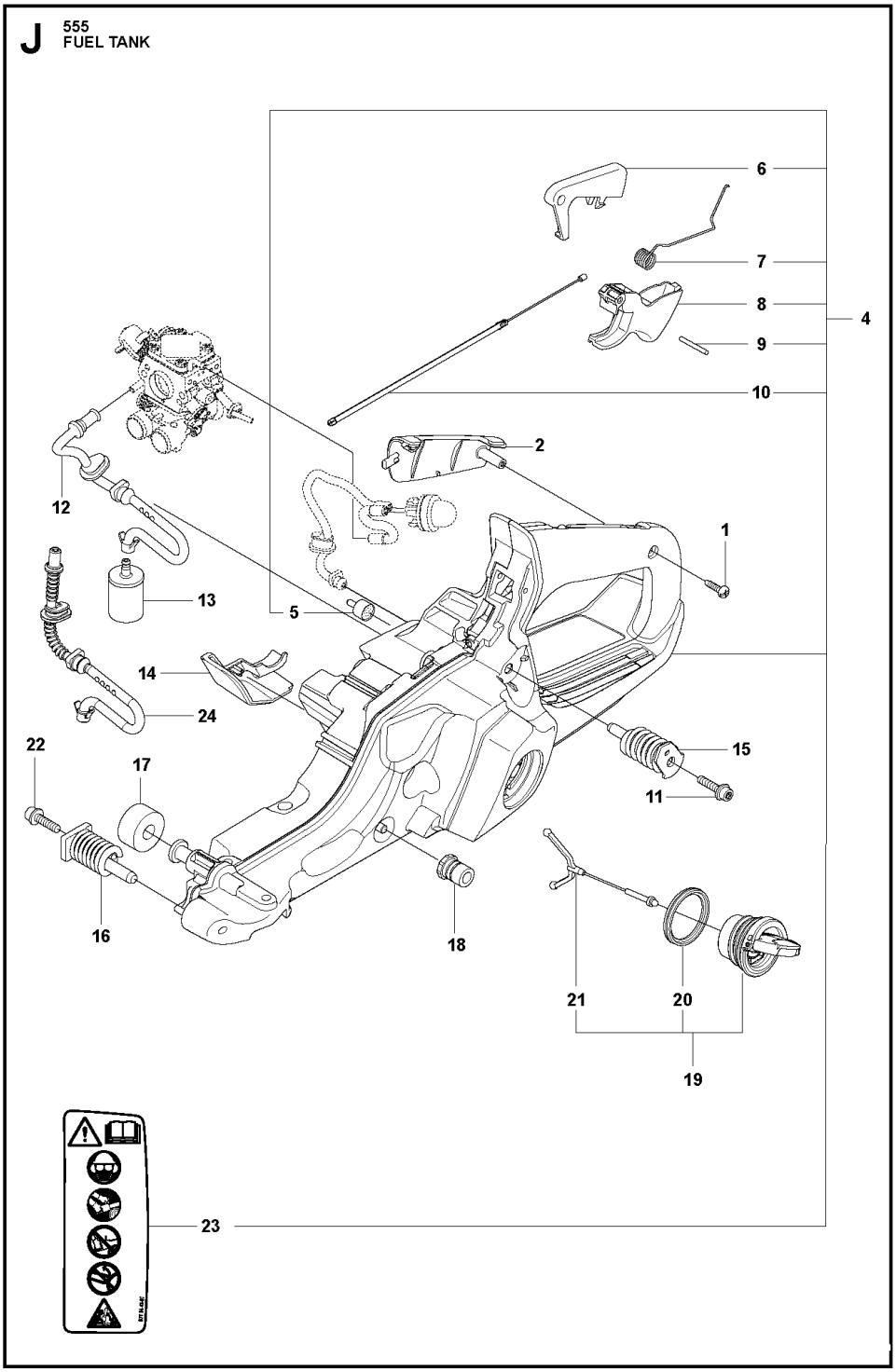

Ref.	Article N.	Description	Qty	Kit
1	575439201	TOOL -	1	-
2	522521101	COMBINATION WRENCH -	1	-
3	503558601	SPANNER -	1	-

Ref.	Article N.	Description	Qty	Kit
4	503558602	SPANNER -	1	-
5	503621201	GREASE -	1	-
6	501911401	GREASE GUN -	1	-
7	583897101	DIAGNOSTIC TOOL KIT -	1	-
8	576183401	CABLE ASSY *Diagnostics cable 14 Mhz*	1	-
9	522986502	WINTER KIT -	1	-
10	505166101	WINTER COVER -	1	-
11	503405901	WINTER PLUG -	1	-
12	503217016	SCREW CCRPANT -	2	-
13	740420100	O-RING -	2	-
14	577014003	SPIKE OUTER -	1	-
15	575793501	SCREW ITXPANM -	2	-
16	577962501	SPIKE OUTER -	1	-
17	503222401	LOCK NUT -	2	-
18	578125501	WINTER PLUG -	1	-
19	574889801	ENCLOSED KIT -	1	-
20	576952201	CABLE ASSY *Diagnostics cable 8 MHz*	1	-
21	503267201	GLUE -	1	-
22	575880701	WRENCH -	1	-
1	505126304	AIR FILTER ASSY *NYLON 80 µm Black s/n up to - 20202699999*	1	-
1	505126305	AIR FILTER ASSY *NYLON 44 µm Yellow s/n up to - 20202699999*	1	-
1	505126306	AIR FILTER ASSY	1	-

Ref.	Article N.	Description	Qty	Kit
		FELT White s/n up to - 20202699999		
1	505126307	AIR FILTER *NYLON 25 µm Orange s/n up to - 20202699999*	1	-
1	590458801	AIR FILTER *NYLON 64 µm Black s/n from 20202700001 -*	1	-
1	590458802	AIR FILTER *NYLON 25 µm Yellow s/n from 20202700001 -*	1	-
1	590458803	AIR FILTER ASSY *Non Woven Nature s/n from 20202700001 -*	1	-
2	525397905	FILTER HOLDER ASSY *s/n up to - 20202699999*	1	-
2	597275501	FILTER HOLDER ASSY *s/n from 20202700001 -*	1	-
3	505176901	SHACKLE *s/n up to - 20202699999*	1	-
4	510017202	CHOKE CONTROL ASSY	1	-
5	505156201	SCREW	1	-
6	525588101	SEALING	1	-
7	503936601	PURGE	1	-
8	574353503	SCREW ITXSCM	2	-
9	525344303	FUEL HOSE *s/n from 20173800688*	1	-
9	589357101	VENTILATING HOSE *s/n up to - 20154500384*	1	-
9	587645404	VENTILATING HOSE *s/n from 20154500385*	1	-
10	579194101	CARBURETTOR *s/n up to - 20121499999 (ZAMA EL44)*	1	-
10	501463308	CARBURETTOR KIT *From s/n 20121500001-*	1	-
11	526818101	SCREW ITXSCM	4	-
12	505165202	FLANGE	1	-
13	503226503	SQUARE NUT	2	-
14	583964103	INLET PIPE	1	-
14	583964104	INLET PIPE *Cold resistant*	1	-
15	520290901	INTERMEDIATE WALL	1	-
16	525619201	SEALING	1	-
17	525619001	SEALING	1	-
18	523056801	FUEL HOSE	1	-

Ref.	Article N.	Description	Qty	Kit
20	577536401	WIRING ASSY *s/n from 20121500001 -*	1	-
21	582025101	SUPPORT SLEEVE	1	-
22	598934501	FILTER UNIT	1	-
23	731231401	HEXAGON NUT *s/n from 20202700001 -*	1	-
1	598934701	FILTER UNIT	1	-
1	579194101	CARBURETTOR *s/n up to - 20121499999 (ZAMA EL44)*	1	-
1	501463308	CARBURETTOR KIT	1	-
4	522517401	DIAPHRAGM	1	-
5	522517501	GASKET	1	-
6	503479701	VALVE	1	-
7	503665901	LEVER	1	-
8	537383401	SPRING	1	-
12	576414201	MAIN NOZZLE	1	-
17	503481801	SCREW	3	-
21	522517801	THROTTLE LEVER	1	-
26	503535701	STRAINER	1	-
27	537383101	DIAPHRAGM PUMP	1	-
28	537403301	DIAPHRAGM	1	-
29	537020101	GASKET	1	-
32	503479001	SCREW	1	-
46	537177001	VALVE	1	-
50	522518901	GASKET KIT *B=set of gaskets*	1	-
51	582025101	SUPPORT SLEEVE	1	-
1	505200902	HAND GUARD	1	-
2	526834501	SCREW	2	-
3	577780201	BUSHING	2	-
4	505197301	NUT	2	-
5	501846104	CLUTCH COVER ASSY	1	-
6	503751801	PIN	1	-
7	526221801	SCREW CITXPANT	5	-
8	505199301	KNEE JOINT ASSY	1	-
9	503908301	BRAKE SPRING	1	-
10	505199502	BRAKE BAND ASSY	1	-
11	505201601	GUARD	1	-
12	505199703	COVER	1	-

Ref.	Article N.	Description	Qty	Kit
14	523058001	LABEL *- up to s/n 20202399999*	1	-
15	575260404	CHAIN TENSIONER KIT	1	-
16	740480702	O-RING	1	-
17	503230063	WASHER	1	-
20	537017401	BEARING SLEEVE	1	-
22	505199801	CHAIN GUIDE	1	-
1	589809002	CLUTCH ASSY	1	-
2	502164701	CLUTCH SPRING *s/n from 20164100193 -*	3	-
2	580653502	CLUTCH SPRING *s/n from 20132500001 - up to s/n 20164100192*	3	-
3	575261005	CLUTCH DRUM ASSY *- up to s/n 20202200048 .325 x7*	1	-
3	575261006	CLUTCH DRUM *- up to s/n 20202200048 3/8 x7*	1	-
3	575261009	CLUTCH DRUM ASSY	1	-
3	575261010	CLUTCH DRUM ASSY	1	-
4	501457402	RIM SPROCKET *.325x7*	1	-
4	501598002	RIM SPROCKET *3/8x7*	1	-
5	503253401	NEEDLE BEARING	1	-
6	505200801	WORM WHEEL *- up to s/n 20202200048*	1	-
6	586201701	WORM WHEEL *s/n from 20202200049 - .325*	1	-
6	587633001	WORM WHEEL *s/n from 20202200049 - 3/8*	1	-
7	505199908	OIL PUMP ASSY	1	-
8	505200202	PUMP PISTON	1	-
9	505200301	CASING	1	-
10	503230060	WASHER	2	-
11	503891601	SPRING	1	-
12	505157001	ADJUSTMENT SCREW	1	-
14	526818102	SCREW ITXSCM	2	-
15	505200402	OIL HOSE	1	-
16	504710003	OIL PLUMMET	1	-
17	720123300	PARALLEL PIN	2	-
18	503891501	SPRING	1	-
19	505200101	PUMP CYLINDER	1	-

Ref.	Article N.	Description	Qty	Kit
20	503624902	SEALING PLUG	1	-
21	598937705	CLUTCH DRUM ASSY	1	-
21	598937707	CLUTCH DRUM ASSY	1	-
1	588193901	CARBURETTOR AREA BASE	1	-
2	525755202	SCREW ITXSCFM	4	-
3	503869301	SUPPORT	2	-
4	581559201	BELLOWS	1	-
5	575380224	CRANKCASE ASSY	1	-
6	505201101	CHAIN GUIDE PLATE	1	-
7	575793501	SCREW ITXPANM	2	-
8	537403501	FILTER	1	-
9	530026119	CHECK VALVE	1	-
10	537210701	SPRING GUIDE	1	-
11	503436501	POSITION SPRING	1	-
12	505201201	CATCH	1	-
13	503751801	PIN	1	-
14	593806001	GUIDE BUSHING	2	-
15	505217301	BAR BOLT	2	-
16	525824401	SCREW ITXSCM	2	-
17	575841104	SCREW ITXSCM	6	-
19	577935201	SPIKE	1	-
20	537377902	CHAIN CATCHER	1	-
21	525798103	SCREW ITXSCFT	1	-
22	505125801	DEFLECTION LIMITER	1	-
23	595303003	SNAP LOCKING	1	-
24	588065501	AIR NOZZLE	1	-
25	526818101	SCREW ITXSCM	1	-
26	522620003	TANK CAP ASSY	1	-
27	589241101	GASKET	1	-
28	503578901	HOLDER	1	-
29	525391201	RADIAL SEAL *- up to s/n 20202399999*	1	-
30	525887401	SCREW CITXPANT	1	-
31	575270003	GASKET KIT *A=set of gaskets*	1	-
32	574889801	ENCLOSED KIT	1	-
33	596911301	PROTECTIVE CAP *- up to s/n 20224908629*	1	-
1	575545214	CRANKSHAFT ASSY	1	-

Ref.	Article N.	Description	Qty	Kit
		- up to s/n 20202399999		
2	505133505	BALL BEARING	1	-
3	525434204	BALL BEARING	1	-
4	503256302	NEEDLE BEARING	1	-
5	525391201	RADIAL SEAL *- up to s/n 20202399999*	1	-
6	505416101	RADIAL SEAL	1	-
7	575545218	CRANKSHAFT ASSY *s/n from 20202400001 -*	1	-
1	587248504	CYLINDER COVER ASSY *s/n up to - 20202699999*	1	-
2	587149501	LABEL -	1	-
3	587248703	CYLINDER COVER ASSY -	1	-
1	531008615	SPARK PLUG -	1	-
2	582392701	SCREW -	4	-
3	575276901	DECOMPRESSION VALVE -	1	-
4	503552201	PLUG -	1	-
5	576717602	SLEEVE -	4	-
6	510164901	GASKET -	1	-
7	575355806	CYLINDER ASSY -	1	-
8	584807806	PISTON ASSY -	1	-
9	505215701	PISTON RING -	1	-
10	737441000	SNAP RING -	2	-
11	503256302	NEEDLE BEARING -	1	-
12	575270003	GASKET KIT *A=set of gaskets*	1	-
13	520291101	BUSHING -	1	-
1	525887402	SCREW CITXPANT	1	-

Ref.	Article N.	Description	Qty	Kit
2	504106301	HANDLE INSERT	1	-
4	575382205	FUEL TANK ASSY	1	-
5	501152901	TANK VENT ASSY	1	-
6	544099801	THROTTLE LOCKOUT	1	-
7	544099901	SPRING	1	-
8	505157701	THROTTLE	1	-
9	720182520	PARALLEL PIN	1	-
10	521887901	THROTTLE CABLE ASSY	1	-
11	525798103	SCREW ITXSCFT	1	-
12	573993503	FUEL HOSE	1	-
13	503443203	FUEL FILTER *18-40 µm (Blue)*	1	-
14	505165901	COVER	1	-
15	586312103	ANTIVIBRATION ELEMENT	1	-
16	505128702	ANTIVIBRATION ELEMENT	1	-
17	523085501	DEFLECTION LIMITER	1	-
18	501007601	SUPPORT	1	-
19	522620003	TANK CAP ASSY	1	-
20	589241101	GASKET	1	-
21	503578901	HOLDER	1	-
22	525798103	SCREW ITXSCFT	1	-
23	577844301	DECAL	1	-
24	529578202	FUEL HOSE ASSY *From s/n 20161000481 - with magnet*	1	-
1	575388905	FRONT HANDLE	1	-
2	525798103	SCREW ITXSCFT	2	-
3	525798101	SCREW ITXSCFT	3	-
4	505129705	ANTIVIBRATION ELEMENT	1	-
1	581914802	MUFFLER KIT -	1	-
2	724128759	SCREW CRPANM -	1	-
3	505171301	SPARK ARRESTER -	1	-
4	525825106	SCREW ITXSCM *s/n from 20132500001 -*	2	-
5	577656301	SLEEVE *s/n up to - 20132499999*	2	-
6	581918501	GASKET -	1	-

Ref.	Article N.	Description	Qty	Kit
7	585178701	HEAT DEFLECTOR -	1	-
8	577902201	WASHER *s/n up to - 20132499999*	2	-
9	525762501	SCREW ITXSCM -	2	-
10	575270003	GASKET KIT *A=set of gaskets*	1	-
11	725537655	SCREW IHSCM *s/n up to - 20132499999*	2	-
1	505157501	AIR CONDUCTOR -	1	-
2	505159207	STARTER ASSY -	1	-
3	537232501	STARTER HANDLE -	1	-
4	505305125	STARTER ROPE -	1	-
5	576356601	SCREW ITXSCT -	1	-
6	537283201	SLEEVE -	1	-
7	505158101	STARTER PULLEY ASSY -	1	-
8	525887401	SCREW CITXPANT -	2	-
9	598750301	SPRING CASSETTE ASSY -	1	-
10	525824501	SCREW CITXPANMO -	4	-
11	505159102	STARTER HOUSING -	1	-
12	523035601	LABEL -	1	-
1	522795107	IGNITION MODULE ASSY *s/n up to - 20121499999 (14MHz)*	1	-
1	596214001	IGNITION MODULE *s/n from 20121500001 - (8MHz)*	1	-
2	501485404	SPARK PLUG CAP ASSY	1	-
3	525755203	SCREW ITXSCFM	2	-
4	575430601	WIRING ASSY *s/n up to - 20121499999 (14MHz)*	1	-
4	577967601	WIRING ASSY	1	-

Ref.	Article N.	Description	Qty	Kit
		s/n from 20121500001 - (8MHz)		
5	505178201	CABLE HOLDER	1	-
6	585321801	NUT	1	-
7	504872403	FLYWHEEL ASSY	1	-
8	503230042	WASHER	2	-
9	501673501	SPRING	2	-
10	501673201	PAWL	2	-
11	506006901	SCREW	2	-
12	504043505	CABLE COVER	1	-
13	503238501	SHRINKAGE HOSE	2	-
14	525887401	SCREW CITXPANT	1	-

HANDLE

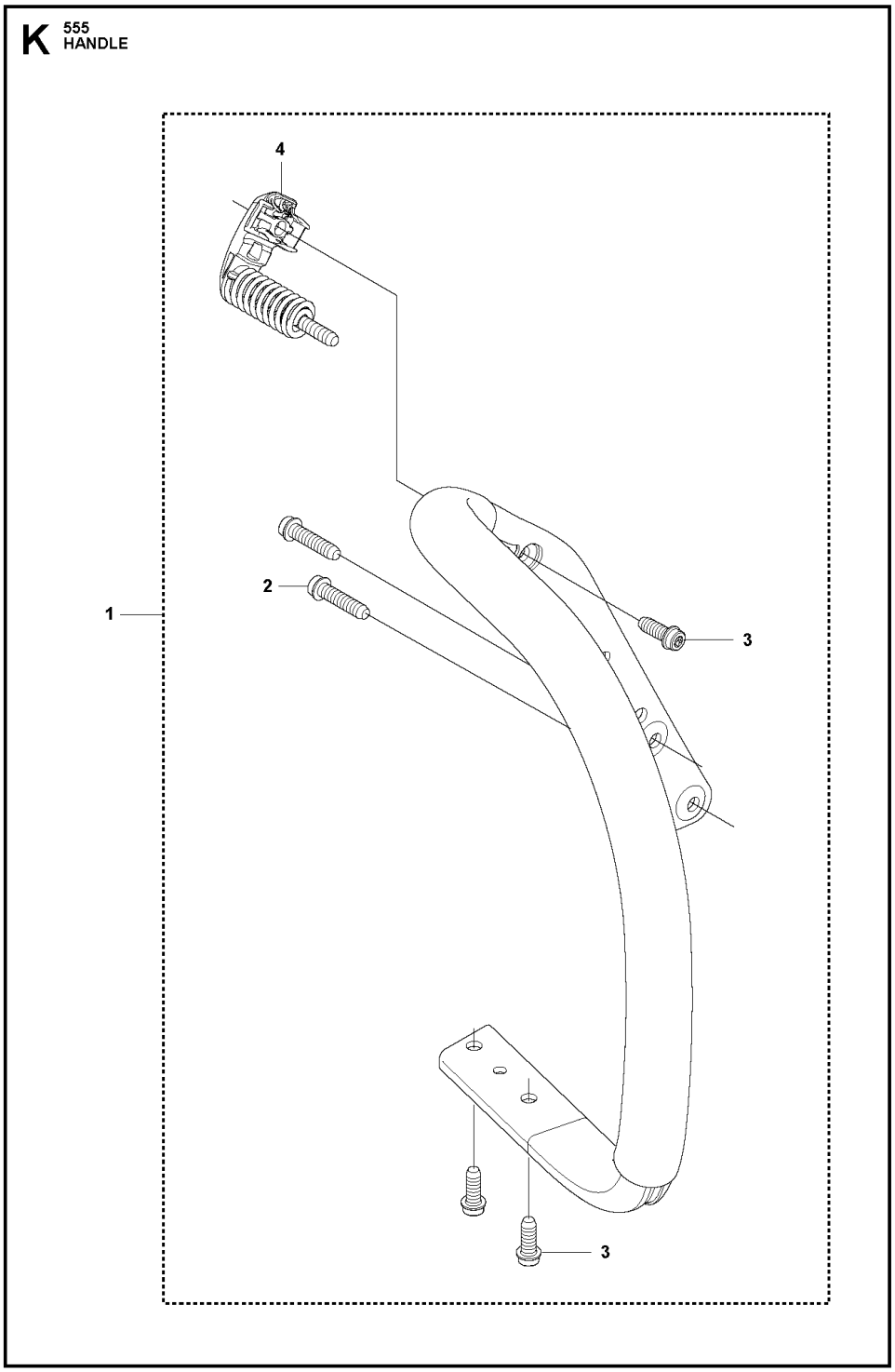

Ref.	Article N.	Description	Qty	Kit
1	575439201	TOOL -	1	-
2	522521101	COMBINATION WRENCH -	1	-
3	503558601	SPANNER -	1	-

Ref.	Article N.	Description	Qty	Kit
4	503558602	SPANNER -	1	-
5	503621201	GREASE -	1	-
6	501911401	GREASE GUN -	1	-
7	583897101	DIAGNOSTIC TOOL KIT -	1	-
8	576183401	CABLE ASSY *Diagnostics cable 14 Mhz*	1	-
9	522986502	WINTER KIT -	1	-
10	505166101	WINTER COVER -	1	-
11	503405901	WINTER PLUG -	1	-
12	503217016	SCREW CCRPANT -	2	-
13	740420100	O-RING -	2	-
14	577014003	SPIKE OUTER -	1	-
15	575793501	SCREW ITXPANM -	2	-
16	577962501	SPIKE OUTER -	1	-
17	503222401	LOCK NUT -	2	-
18	578125501	WINTER PLUG -	1	-
19	574889801	ENCLOSED KIT -	1	-
20	576952201	CABLE ASSY *Diagnostics cable 8 MHz*	1	-
21	503267201	GLUE -	1	-
22	575880701	WRENCH -	1	-
1	505126304	AIR FILTER ASSY *NYLON 80 µm Black s/n up to - 20202699999*	1	-
1	505126305	AIR FILTER ASSY *NYLON 44 µm Yellow s/n up to - 20202699999*	1	-
1	505126306	AIR FILTER ASSY	1	-

Ref.	Article N.	Description	Qty	Kit
		FELT White s/n up to - 20202699999		
1	505126307	AIR FILTER *NYLON 25 µm Orange s/n up to - 20202699999*	1	-
1	590458801	AIR FILTER *NYLON 64 µm Black s/n from 20202700001 -*	1	-
1	590458802	AIR FILTER *NYLON 25 µm Yellow s/n from 20202700001 -*	1	-
1	590458803	AIR FILTER ASSY *Non Woven Nature s/n from 20202700001 -*	1	-
2	525397905	FILTER HOLDER ASSY *s/n up to - 20202699999*	1	-
2	597275501	FILTER HOLDER ASSY *s/n from 20202700001 -*	1	-
3	505176901	SHACKLE *s/n up to - 20202699999*	1	-
4	510017202	CHOKE CONTROL ASSY	1	-
5	505156201	SCREW	1	-
6	525588101	SEALING	1	-
7	503936601	PURGE	1	-
8	574353503	SCREW ITXSCM	2	-
9	525344303	FUEL HOSE *s/n from 20173800688*	1	-
9	589357101	VENTILATING HOSE *s/n up to - 20154500384*	1	-
9	587645404	VENTILATING HOSE *s/n from 20154500385*	1	-
10	579194101	CARBURETTOR *s/n up to - 20121499999 (ZAMA EL44)*	1	-
10	501463308	CARBURETTOR KIT *From s/n 20121500001-*	1	-
11	526818101	SCREW ITXSCM	4	-
12	505165202	FLANGE	1	-
13	503226503	SQUARE NUT	2	-
14	583964103	INLET PIPE	1	-
14	583964104	INLET PIPE *Cold resistant*	1	-
15	520290901	INTERMEDIATE WALL	1	-
16	525619201	SEALING	1	-
17	525619001	SEALING	1	-
18	523056801	FUEL HOSE	1	-

Ref.	Article N.	Description	Qty	Kit
20	577536401	WIRING ASSY *s/n from 20121500001 -*	1	-
21	582025101	SUPPORT SLEEVE	1	-
22	598934501	FILTER UNIT	1	-
23	731231401	HEXAGON NUT *s/n from 20202700001 -*	1	-
1	598934701	FILTER UNIT	1	-
1	579194101	CARBURETTOR *s/n up to - 20121499999 (ZAMA EL44)*	1	-
1	501463308	CARBURETTOR KIT	1	-
4	522517401	DIAPHRAGM	1	-
5	522517501	GASKET	1	-
6	503479701	VALVE	1	-
7	503665901	LEVER	1	-
8	537383401	SPRING	1	-
12	576414201	MAIN NOZZLE	1	-
17	503481801	SCREW	3	-
21	522517801	THROTTLE LEVER	1	-
26	503535701	STRAINER	1	-
27	537383101	DIAPHRAGM PUMP	1	-
28	537403301	DIAPHRAGM	1	-
29	537020101	GASKET	1	-
32	503479001	SCREW	1	-
46	537177001	VALVE	1	-
50	522518901	GASKET KIT *B=set of gaskets*	1	-
51	582025101	SUPPORT SLEEVE	1	-
1	505200902	HAND GUARD	1	-
2	526834501	SCREW	2	-
3	577780201	BUSHING	2	-
4	505197301	NUT	2	-
5	501846104	CLUTCH COVER ASSY	1	-
6	503751801	PIN	1	-
7	526221801	SCREW CITXPANT	5	-
8	505199301	KNEE JOINT ASSY	1	-
9	503908301	BRAKE SPRING	1	-
10	505199502	BRAKE BAND ASSY	1	-
11	505201601	GUARD	1	-
12	505199703	COVER	1	-

Ref.	Article N.	Description	Qty	Kit
14	523058001	LABEL *- up to s/n 20202399999*	1	-
15	575260404	CHAIN TENSIONER KIT	1	-
16	740480702	O-RING	1	-
17	503230063	WASHER	1	-
20	537017401	BEARING SLEEVE	1	-
22	505199801	CHAIN GUIDE	1	-
1	589809002	CLUTCH ASSY	1	-
2	502164701	CLUTCH SPRING *s/n from 20164100193 -*	3	-
2	580653502	CLUTCH SPRING *s/n from 20132500001 - up to s/n 20164100192*	3	-
3	575261005	CLUTCH DRUM ASSY *- up to s/n 20202200048 .325 x7*	1	-
3	575261006	CLUTCH DRUM *- up to s/n 20202200048 3/8 x7*	1	-
3	575261009	CLUTCH DRUM ASSY	1	-
3	575261010	CLUTCH DRUM ASSY	1	-
4	501457402	RIM SPROCKET *.325x7*	1	-
4	501598002	RIM SPROCKET *3/8x7*	1	-
5	503253401	NEEDLE BEARING	1	-
6	505200801	WORM WHEEL *- up to s/n 20202200048*	1	-
6	586201701	WORM WHEEL *s/n from 20202200049 - .325*	1	-
6	587633001	WORM WHEEL *s/n from 20202200049 - 3/8*	1	-
7	505199908	OIL PUMP ASSY	1	-
8	505200202	PUMP PISTON	1	-
9	505200301	CASING	1	-
10	503230060	WASHER	2	-
11	503891601	SPRING	1	-
12	505157001	ADJUSTMENT SCREW	1	-
14	526818102	SCREW ITXSCM	2	-
15	505200402	OIL HOSE	1	-
16	504710003	OIL PLUMMET	1	-
17	720123300	PARALLEL PIN	2	-
18	503891501	SPRING	1	-
19	505200101	PUMP CYLINDER	1	-

Ref.	Article N.	Description	Qty	Kit
20	503624902	SEALING PLUG	1	-
21	598937705	CLUTCH DRUM ASSY	1	-
21	598937707	CLUTCH DRUM ASSY	1	-
1	588193901	CARBURETTOR AREA BASE	1	-
2	525755202	SCREW ITXSCFM	4	-
3	503869301	SUPPORT	2	-
4	581559201	BELLOWS	1	-
5	575380224	CRANKCASE ASSY	1	-
6	505201101	CHAIN GUIDE PLATE	1	-
7	575793501	SCREW ITXPANM	2	-
8	537403501	FILTER	1	-
9	530026119	CHECK VALVE	1	-
10	537210701	SPRING GUIDE	1	-
11	503436501	POSITION SPRING	1	-
12	505201201	CATCH	1	-
13	503751801	PIN	1	-
14	593806001	GUIDE BUSHING	2	-
15	505217301	BAR BOLT	2	-
16	525824401	SCREW ITXSCM	2	-
17	575841104	SCREW ITXSCM	6	-
19	577935201	SPIKE	1	-
20	537377902	CHAIN CATCHER	1	-
21	525798103	SCREW ITXSCFT	1	-
22	505125801	DEFLECTION LIMITER	1	-
23	595303003	SNAP LOCKING	1	-
24	588065501	AIR NOZZLE	1	-
25	526818101	SCREW ITXSCM	1	-
26	522620003	TANK CAP ASSY	1	-
27	589241101	GASKET	1	-
28	503578901	HOLDER	1	-
29	525391201	RADIAL SEAL *- up to s/n 20202399999*	1	-
30	525887401	SCREW CITXPANT	1	-
31	575270003	GASKET KIT *A=set of gaskets*	1	-
32	574889801	ENCLOSED KIT	1	-
33	596911301	PROTECTIVE CAP *- up to s/n 20224908629*	1	-
1	575545214	CRANKSHAFT ASSY	1	-

Ref.	Article N.	Description	Qty	Kit
		- up to s/n 20202399999		
2	505133505	BALL BEARING	1	-
3	525434204	BALL BEARING	1	-
4	503256302	NEEDLE BEARING	1	-
5	525391201	RADIAL SEAL *- up to s/n 20202399999*	1	-
6	505416101	RADIAL SEAL	1	-
7	575545218	CRANKSHAFT ASSY *s/n from 20202400001 -*	1	-
1	587248504	CYLINDER COVER ASSY *s/n up to - 20202699999*	1	-
2	587149501	LABEL -	1	-
3	587248703	CYLINDER COVER ASSY -	1	-
1	531008615	SPARK PLUG -	1	-
2	582392701	SCREW -	4	-
3	575276901	DECOMPRESSION VALVE -	1	-
4	503552201	PLUG -	1	-
5	576717602	SLEEVE -	4	-
6	510164901	GASKET -	1	-
7	575355806	CYLINDER ASSY -	1	-
8	584807806	PISTON ASSY -	1	-
9	505215701	PISTON RING -	1	-
10	737441000	SNAP RING -	2	-
11	503256302	NEEDLE BEARING -	1	-
12	575270003	GASKET KIT *A=set of gaskets*	1	-
13	520291101	BUSHING -	1	-
1	525887402	SCREW CITXPANT	1	-

Ref.	Article N.	Description	Qty	Kit
2	504106301	HANDLE INSERT	1	-
4	575382205	FUEL TANK ASSY	1	-
5	501152901	TANK VENT ASSY	1	-
6	544099801	THROTTLE LOCKOUT	1	-
7	544099901	SPRING	1	-
8	505157701	THROTTLE	1	-
9	720182520	PARALLEL PIN	1	-
10	521887901	THROTTLE CABLE ASSY	1	-
11	525798103	SCREW ITXSCFT	1	-
12	573993503	FUEL HOSE	1	-
13	503443203	FUEL FILTER *18-40 µm (Blue)*	1	-
14	505165901	COVER	1	-
15	586312103	ANTIVIBRATION ELEMENT	1	-
16	505128702	ANTIVIBRATION ELEMENT	1	-
17	523085501	DEFLECTION LIMITER	1	-
18	501007601	SUPPORT	1	-
19	522620003	TANK CAP ASSY	1	-
20	589241101	GASKET	1	-
21	503578901	HOLDER	1	-
22	525798103	SCREW ITXSCFT	1	-
23	577844301	DECAL	1	-
24	529578202	FUEL HOSE ASSY *From s/n 20161000481 - with magnet*	1	-
1	575388905	FRONT HANDLE	1	-
2	525798103	SCREW ITXSCFT	2	-
3	525798101	SCREW ITXSCFT	3	-
4	505129705	ANTIVIBRATION ELEMENT	1	-
1	581914802	MUFFLER KIT -	1	-
2	724128759	SCREW CRPANM -	1	-
3	505171301	SPARK ARRESTER -	1	-
4	525825106	SCREW ITXSCM *s/n from 20132500001 -*	2	-
5	577656301	SLEEVE *s/n up to - 20132499999*	2	-
6	581918501	GASKET -	1	-

Ref.	Article N.	Description	Qty	Kit
7	585178701	HEAT DEFLECTOR -	1	-
8	577902201	WASHER *s/n up to - 20132499999*	2	-
9	525762501	SCREW ITXSCM -	2	-
10	575270003	GASKET KIT *A=set of gaskets*	1	-
11	725537655	SCREW IHSCM *s/n up to - 20132499999*	2	-
1	505157501	AIR CONDUCTOR -	1	-
2	505159207	STARTER ASSY -	1	-
3	537232501	STARTER HANDLE -	1	-
4	505305125	STARTER ROPE -	1	-
5	576356601	SCREW ITXSCT -	1	-
6	537283201	SLEEVE -	1	-
7	505158101	STARTER PULLEY ASSY -	1	-
8	525887401	SCREW CITXPANT -	2	-
9	598750301	SPRING CASSETTE ASSY -	1	-
10	525824501	SCREW CITXPANMO -	4	-
11	505159102	STARTER HOUSING -	1	-
12	523035601	LABEL -	1	-
1	522795107	IGNITION MODULE ASSY *s/n up to - 20121499999 (14MHz)*	1	-
1	596214001	IGNITION MODULE *s/n from 20121500001 - (8MHz)*	1	-
2	501485404	SPARK PLUG CAP ASSY	1	-
3	525755203	SCREW ITXSCFM	2	-
4	575430601	WIRING ASSY *s/n up to - 20121499999 (14MHz)*	1	-
4	577967601	WIRING ASSY	1	-

Ref.	Article N.	Description	Qty	Kit
		s/n from 20121500001 - (8MHz)		
5	505178201	CABLE HOLDER	1	-
6	585321801	NUT	1	-
7	504872403	FLYWHEEL ASSY	1	-
8	503230042	WASHER	2	-
9	501673501	SPRING	2	-
10	501673201	PAWL	2	-
11	506006901	SCREW	2	-
12	504043505	CABLE COVER	1	-
13	503238501	SHRINKAGE HOSE	2	-
14	525887401	SCREW CITXPANT	1	-

MUFFLER

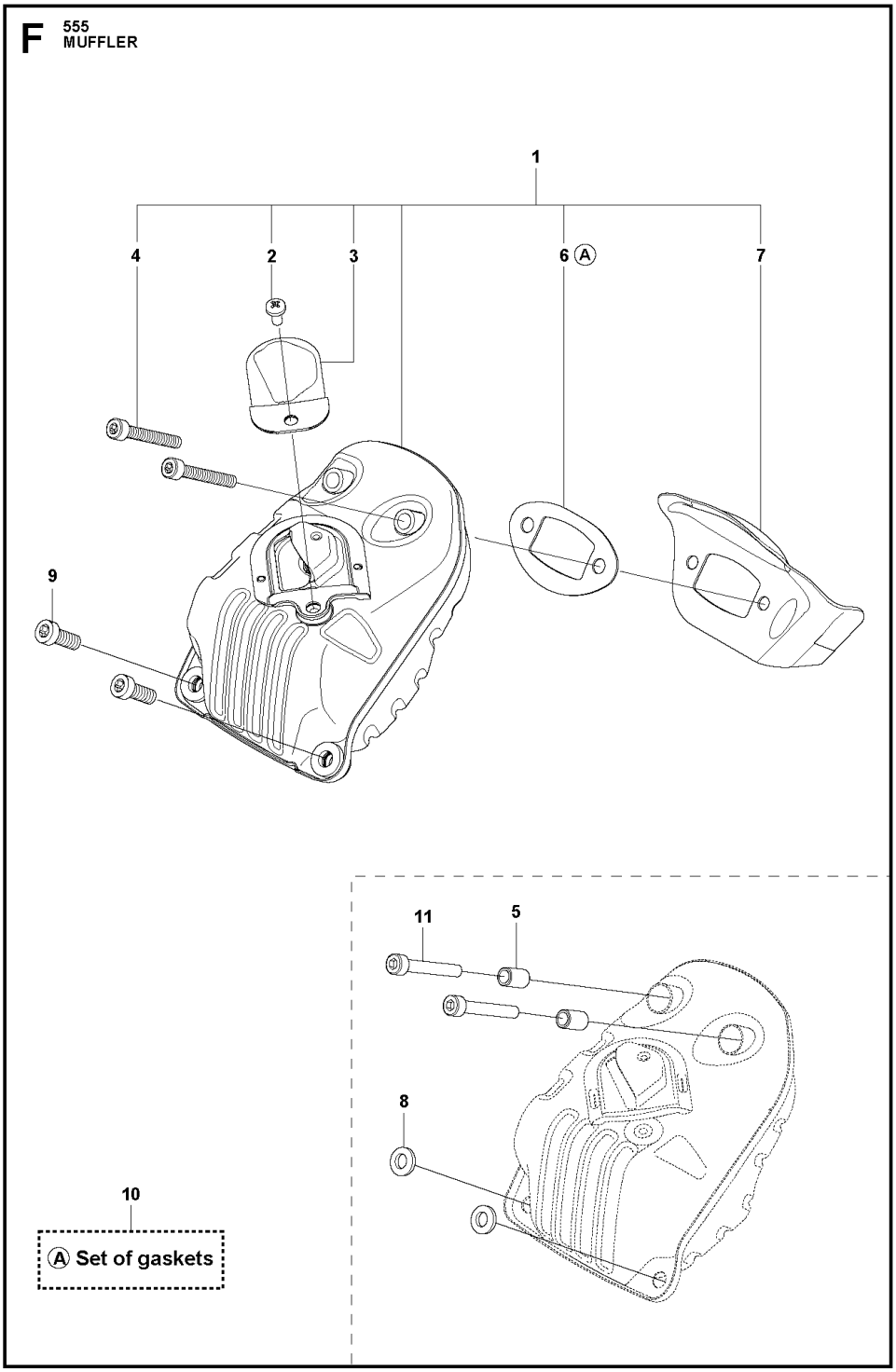

Ref.	Article N.	Description	Qty	Kit
1	575439201	TOOL -	1	-
2	522521101	COMBINATION WRENCH -	1	-
3	503558601	SPANNER -	1	-

Ref.	Article N.	Description	Qty	Kit
4	503558602	SPANNER -	1	-
5	503621201	GREASE -	1	-
6	501911401	GREASE GUN -	1	-
7	583897101	DIAGNOSTIC TOOL KIT -	1	-
8	576183401	CABLE ASSY *Diagnostics cable 14 Mhz*	1	-
9	522986502	WINTER KIT -	1	-
10	505166101	WINTER COVER -	1	-
11	503405901	WINTER PLUG -	1	-
12	503217016	SCREW CCRPANT -	2	-
13	740420100	O-RING -	2	-
14	577014003	SPIKE OUTER -	1	-
15	575793501	SCREW ITXPANM -	2	-
16	577962501	SPIKE OUTER -	1	-
17	503222401	LOCK NUT -	2	-
18	578125501	WINTER PLUG -	1	-
19	574889801	ENCLOSED KIT -	1	-
20	576952201	CABLE ASSY *Diagnostics cable 8 MHz*	1	-
21	503267201	GLUE -	1	-
22	575880701	WRENCH -	1	-
1	505126304	AIR FILTER ASSY *NYLON 80 µm Black s/n up to - 20202699999*	1	-
1	505126305	AIR FILTER ASSY *NYLON 44 µm Yellow s/n up to - 20202699999*	1	-
1	505126306	AIR FILTER ASSY	1	-

Ref.	Article N.	Description	Qty	Kit
		FELT White s/n up to - 20202699999		
1	505126307	AIR FILTER *NYLON 25 µm Orange s/n up to - 20202699999*	1	-
1	590458801	AIR FILTER *NYLON 64 µm Black s/n from 20202700001 -*	1	-
1	590458802	AIR FILTER *NYLON 25 µm Yellow s/n from 20202700001 -*	1	-
1	590458803	AIR FILTER ASSY *Non Woven Nature s/n from 20202700001 -*	1	-
2	525397905	FILTER HOLDER ASSY *s/n up to - 20202699999*	1	-
2	597275501	FILTER HOLDER ASSY *s/n from 20202700001 -*	1	-
3	505176901	SHACKLE *s/n up to - 20202699999*	1	-
4	510017202	CHOKE CONTROL ASSY	1	-
5	505156201	SCREW	1	-
6	525588101	SEALING	1	-
7	503936601	PURGE	1	-
8	574353503	SCREW ITXSCM	2	-
9	525344303	FUEL HOSE *s/n from 20173800688*	1	-
9	589357101	VENTILATING HOSE *s/n up to - 20154500384*	1	-
9	587645404	VENTILATING HOSE *s/n from 20154500385*	1	-
10	579194101	CARBURETTOR *s/n up to - 20121499999 (ZAMA EL44)*	1	-
10	501463308	CARBURETTOR KIT *From s/n 20121500001-*	1	-
11	526818101	SCREW ITXSCM	4	-
12	505165202	FLANGE	1	-
13	503226503	SQUARE NUT	2	-
14	583964103	INLET PIPE	1	-
14	583964104	INLET PIPE *Cold resistant*	1	-
15	520290901	INTERMEDIATE WALL	1	-
16	525619201	SEALING	1	-
17	525619001	SEALING	1	-
18	523056801	FUEL HOSE	1	-

Ref.	Article N.	Description	Qty	Kit
20	577536401	WIRING ASSY *s/n from 20121500001 -*	1	-
21	582025101	SUPPORT SLEEVE	1	-
22	598934501	FILTER UNIT	1	-
23	731231401	HEXAGON NUT *s/n from 20202700001 -*	1	-
1	598934701	FILTER UNIT	1	-
1	579194101	CARBURETTOR *s/n up to - 20121499999 (ZAMA EL44)*	1	-
1	501463308	CARBURETTOR KIT	1	-
4	522517401	DIAPHRAGM	1	-
5	522517501	GASKET	1	-
6	503479701	VALVE	1	-
7	503665901	LEVER	1	-
8	537383401	SPRING	1	-
12	576414201	MAIN NOZZLE	1	-
17	503481801	SCREW	3	-
21	522517801	THROTTLE LEVER	1	-
26	503535701	STRAINER	1	-
27	537383101	DIAPHRAGM PUMP	1	-
28	537403301	DIAPHRAGM	1	-
29	537020101	GASKET	1	-
32	503479001	SCREW	1	-
46	537177001	VALVE	1	-
50	522518901	GASKET KIT *B=set of gaskets*	1	-
51	582025101	SUPPORT SLEEVE	1	-
1	505200902	HAND GUARD	1	-
2	526834501	SCREW	2	-
3	577780201	BUSHING	2	-
4	505197301	NUT	2	-
5	501846104	CLUTCH COVER ASSY	1	-
6	503751801	PIN	1	-
7	526221801	SCREW CITXPANT	5	-
8	505199301	KNEE JOINT ASSY	1	-
9	503908301	BRAKE SPRING	1	-
10	505199502	BRAKE BAND ASSY	1	-
11	505201601	GUARD	1	-
12	505199703	COVER	1	-

Ref.	Article N.	Description	Qty	Kit
14	523058001	LABEL *- up to s/n 20202399999*	1	-
15	575260404	CHAIN TENSIONER KIT	1	-
16	740480702	O-RING	1	-
17	503230063	WASHER	1	-
20	537017401	BEARING SLEEVE	1	-
22	505199801	CHAIN GUIDE	1	-
1	589809002	CLUTCH ASSY	1	-
2	502164701	CLUTCH SPRING *s/n from 20164100193 -*	3	-
2	580653502	CLUTCH SPRING *s/n from 20132500001 - up to s/n 20164100192*	3	-
3	575261005	CLUTCH DRUM ASSY *- up to s/n 20202200048 .325 x7*	1	-
3	575261006	CLUTCH DRUM *- up to s/n 20202200048 3/8 x7*	1	-
3	575261009	CLUTCH DRUM ASSY	1	-
3	575261010	CLUTCH DRUM ASSY	1	-
4	501457402	RIM SPROCKET *.325x7*	1	-
4	501598002	RIM SPROCKET *3/8x7*	1	-
5	503253401	NEEDLE BEARING	1	-
6	505200801	WORM WHEEL *- up to s/n 20202200048*	1	-
6	586201701	WORM WHEEL *s/n from 20202200049 - .325*	1	-
6	587633001	WORM WHEEL *s/n from 20202200049 - 3/8*	1	-
7	505199908	OIL PUMP ASSY	1	-
8	505200202	PUMP PISTON	1	-
9	505200301	CASING	1	-
10	503230060	WASHER	2	-
11	503891601	SPRING	1	-
12	505157001	ADJUSTMENT SCREW	1	-
14	526818102	SCREW ITXSCM	2	-
15	505200402	OIL HOSE	1	-
16	504710003	OIL PLUMMET	1	-
17	720123300	PARALLEL PIN	2	-
18	503891501	SPRING	1	-
19	505200101	PUMP CYLINDER	1	-

Ref.	Article N.	Description	Qty	Kit
20	503624902	SEALING PLUG	1	-
21	598937705	CLUTCH DRUM ASSY	1	-
21	598937707	CLUTCH DRUM ASSY	1	-
1	588193901	CARBURETTOR AREA BASE	1	-
2	525755202	SCREW ITXSCFM	4	-
3	503869301	SUPPORT	2	-
4	581559201	BELLOWS	1	-
5	575380224	CRANKCASE ASSY	1	-
6	505201101	CHAIN GUIDE PLATE	1	-
7	575793501	SCREW ITXPANM	2	-
8	537403501	FILTER	1	-
9	530026119	CHECK VALVE	1	-
10	537210701	SPRING GUIDE	1	-
11	503436501	POSITION SPRING	1	-
12	505201201	CATCH	1	-
13	503751801	PIN	1	-
14	593806001	GUIDE BUSHING	2	-
15	505217301	BAR BOLT	2	-
16	525824401	SCREW ITXSCM	2	-
17	575841104	SCREW ITXSCM	6	-
19	577935201	SPIKE	1	-
20	537377902	CHAIN CATCHER	1	-
21	525798103	SCREW ITXSCFT	1	-
22	505125801	DEFLECTION LIMITER	1	-
23	595303003	SNAP LOCKING	1	-
24	588065501	AIR NOZZLE	1	-
25	526818101	SCREW ITXSCM	1	-
26	522620003	TANK CAP ASSY	1	-
27	589241101	GASKET	1	-
28	503578901	HOLDER	1	-
29	525391201	RADIAL SEAL *- up to s/n 20202399999*	1	-
30	525887401	SCREW CITXPANT	1	-
31	575270003	GASKET KIT *A=set of gaskets*	1	-
32	574889801	ENCLOSED KIT	1	-
33	596911301	PROTECTIVE CAP *- up to s/n 20224908629*	1	-
1	575545214	CRANKSHAFT ASSY	1	-

Ref.	Article N.	Description	Qty	Kit
		- up to s/n 20202399999		
2	505133505	BALL BEARING	1	-
3	525434204	BALL BEARING	1	-
4	503256302	NEEDLE BEARING	1	-
5	525391201	RADIAL SEAL *- up to s/n 20202399999*	1	-
6	505416101	RADIAL SEAL	1	-
7	575545218	CRANKSHAFT ASSY *s/n from 20202400001 -*	1	-
1	587248504	CYLINDER COVER ASSY *s/n up to - 20202699999*	1	-
2	587149501	LABEL -	1	-
3	587248703	CYLINDER COVER ASSY -	1	-
1	531008615	SPARK PLUG -	1	-
2	582392701	SCREW -	4	-
3	575276901	DECOMPRESSION VALVE -	1	-
4	503552201	PLUG -	1	-
5	576717602	SLEEVE -	4	-
6	510164901	GASKET -	1	-
7	575355806	CYLINDER ASSY -	1	-
8	584807806	PISTON ASSY -	1	-
9	505215701	PISTON RING -	1	-
10	737441000	SNAP RING -	2	-
11	503256302	NEEDLE BEARING -	1	-
12	575270003	GASKET KIT *A=set of gaskets*	1	-
13	520291101	BUSHING -	1	-
1	525887402	SCREW CITXPANT	1	-

Ref.	Article N.	Description	Qty	Kit
2	504106301	HANDLE INSERT	1	-
4	575382205	FUEL TANK ASSY	1	-
5	501152901	TANK VENT ASSY	1	-
6	544099801	THROTTLE LOCKOUT	1	-
7	544099901	SPRING	1	-
8	505157701	THROTTLE	1	-
9	720182520	PARALLEL PIN	1	-
10	521887901	THROTTLE CABLE ASSY	1	-
11	525798103	SCREW ITXSCFT	1	-
12	573993503	FUEL HOSE	1	-
13	503443203	FUEL FILTER *18-40 µm (Blue)*	1	-
14	505165901	COVER	1	-
15	586312103	ANTIVIBRATION ELEMENT	1	-
16	505128702	ANTIVIBRATION ELEMENT	1	-
17	523085501	DEFLECTION LIMITER	1	-
18	501007601	SUPPORT	1	-
19	522620003	TANK CAP ASSY	1	-
20	589241101	GASKET	1	-
21	503578901	HOLDER	1	-
22	525798103	SCREW ITXSCFT	1	-
23	577844301	DECAL	1	-
24	529578202	FUEL HOSE ASSY *From s/n 20161000481 - with magnet*	1	-
1	575388905	FRONT HANDLE	1	-
2	525798103	SCREW ITXSCFT	2	-
3	525798101	SCREW ITXSCFT	3	-
4	505129705	ANTIVIBRATION ELEMENT	1	-
1	581914802	MUFFLER KIT -	1	-
2	724128759	SCREW CRPANM -	1	-
3	505171301	SPARK ARRESTER -	1	-
4	525825106	SCREW ITXSCM *s/n from 20132500001 -*	2	-
5	577656301	SLEEVE *s/n up to - 20132499999*	2	-
6	581918501	GASKET -	1	-

Ref.	Article N.	Description	Qty	Kit
7	585178701	HEAT DEFLECTOR -	1	-
8	577902201	WASHER *s/n up to - 20132499999*	2	-
9	525762501	SCREW ITXSCM -	2	-
10	575270003	GASKET KIT *A=set of gaskets*	1	-
11	725537655	SCREW IHSCM *s/n up to - 20132499999*	2	-
1	505157501	AIR CONDUCTOR -	1	-
2	505159207	STARTER ASSY -	1	-
3	537232501	STARTER HANDLE -	1	-
4	505305125	STARTER ROPE -	1	-
5	576356601	SCREW ITXSCT -	1	-
6	537283201	SLEEVE -	1	-
7	505158101	STARTER PULLEY ASSY -	1	-
8	525887401	SCREW CITXPANT -	2	-
9	598750301	SPRING CASSETTE ASSY -	1	-
10	525824501	SCREW CITXPANMO -	4	-
11	505159102	STARTER HOUSING -	1	-
12	523035601	LABEL -	1	-
1	522795107	IGNITION MODULE ASSY *s/n up to - 20121499999 (14MHz)*	1	-
1	596214001	IGNITION MODULE *s/n from 20121500001 - (8MHz)*	1	-
2	501485404	SPARK PLUG CAP ASSY	1	-
3	525755203	SCREW ITXSCFM	2	-
4	575430601	WIRING ASSY *s/n up to - 20121499999 (14MHz)*	1	-
4	577967601	WIRING ASSY	1	-

Ref.	Article N.	Description	Qty	Kit
		s/n from 20121500001 - (8MHz)		
5	505178201	CABLE HOLDER	1	-
6	585321801	NUT	1	-
7	504872403	FLYWHEEL ASSY	1	-
8	503230042	WASHER	2	-
9	501673501	SPRING	2	-
10	501673201	PAWL	2	-
11	506006901	SCREW	2	-
12	504043505	CABLE COVER	1	-
13	503238501	SHRINKAGE HOSE	2	-
14	525887401	SCREW CITXPANT	1	-

STARTER

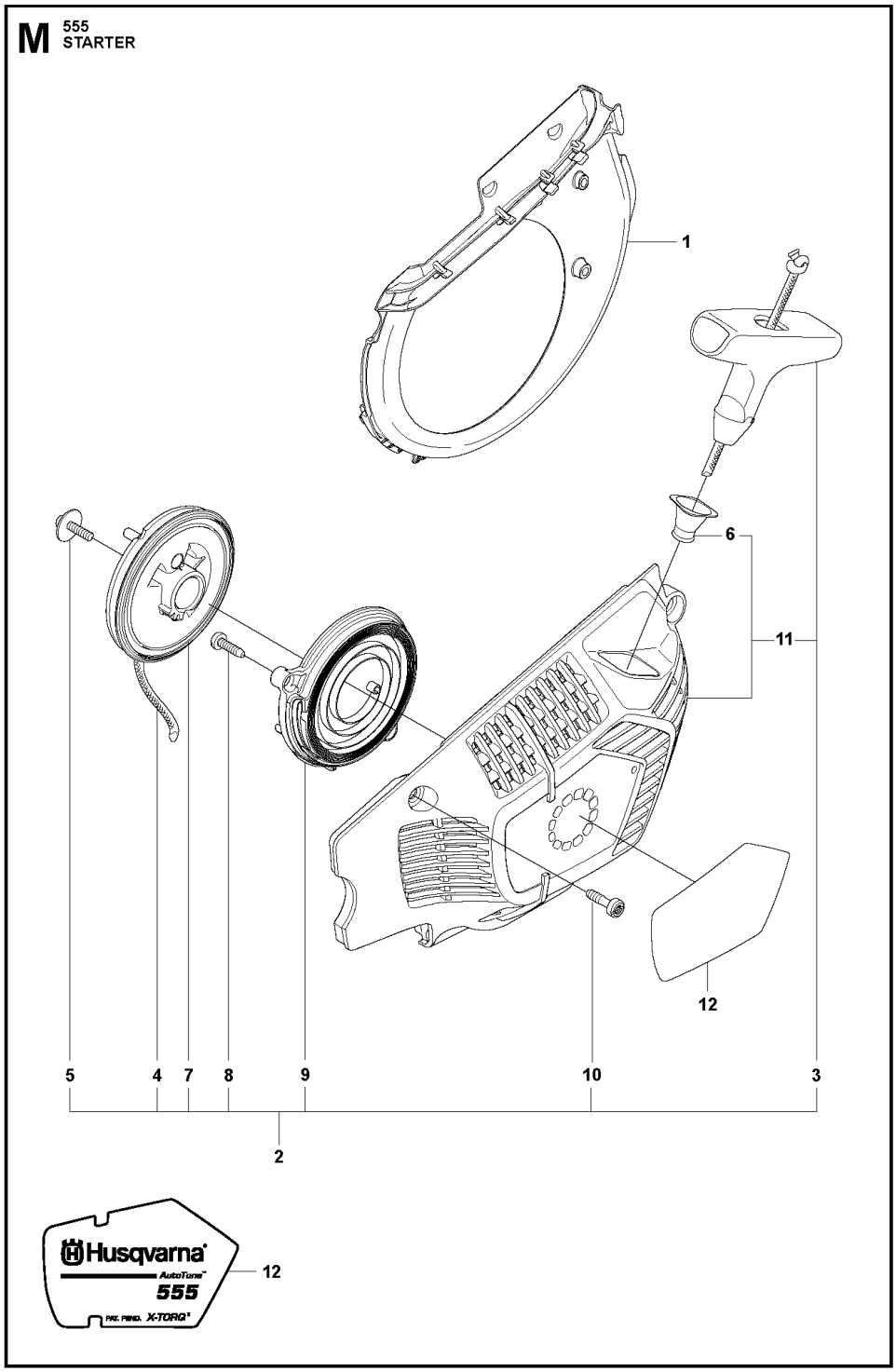

Ref.	Article N.	Description	Qty	Kit
1	575439201	TOOL -	1	-
2	522521101	COMBINATION WRENCH -	1	-
3	503558601	SPANNER -	1	-

Ref.	Article N.	Description	Qty	Kit
4	503558602	SPANNER -	1	-
5	503621201	GREASE -	1	-
6	501911401	GREASE GUN -	1	-
7	583897101	DIAGNOSTIC TOOL KIT -	1	-
8	576183401	CABLE ASSY *Diagnostics cable 14 Mhz*	1	-
9	522986502	WINTER KIT -	1	-
10	505166101	WINTER COVER -	1	-
11	503405901	WINTER PLUG -	1	-
12	503217016	SCREW CCRPANT -	2	-
13	740420100	O-RING -	2	-
14	577014003	SPIKE OUTER -	1	-
15	575793501	SCREW ITXPANM -	2	-
16	577962501	SPIKE OUTER -	1	-
17	503222401	LOCK NUT -	2	-
18	578125501	WINTER PLUG -	1	-
19	574889801	ENCLOSED KIT -	1	-
20	576952201	CABLE ASSY *Diagnostics cable 8 MHz*	1	-
21	503267201	GLUE -	1	-
22	575880701	WRENCH -	1	-
1	505126304	AIR FILTER ASSY *NYLON 80 µm Black s/n up to - 20202699999*	1	-
1	505126305	AIR FILTER ASSY *NYLON 44 µm Yellow s/n up to - 20202699999*	1	-
1	505126306	AIR FILTER ASSY	1	-

Ref.	Article N.	Description	Qty	Kit
		FELT White s/n up to - 20202699999		
1	505126307	AIR FILTER *NYLON 25 µm Orange s/n up to - 20202699999*	1	-
1	590458801	AIR FILTER *NYLON 64 µm Black s/n from 20202700001 -*	1	-
1	590458802	AIR FILTER *NYLON 25 µm Yellow s/n from 20202700001 -*	1	-
1	590458803	AIR FILTER ASSY *Non Woven Nature s/n from 20202700001 -*	1	-
2	525397905	FILTER HOLDER ASSY *s/n up to - 20202699999*	1	-
2	597275501	FILTER HOLDER ASSY *s/n from 20202700001 -*	1	-
3	505176901	SHACKLE *s/n up to - 20202699999*	1	-
4	510017202	CHOKE CONTROL ASSY	1	-
5	505156201	SCREW	1	-
6	525588101	SEALING	1	-
7	503936601	PURGE	1	-
8	574353503	SCREW ITXSCM	2	-
9	525344303	FUEL HOSE *s/n from 20173800688*	1	-
9	589357101	VENTILATING HOSE *s/n up to - 20154500384*	1	-
9	587645404	VENTILATING HOSE *s/n from 20154500385*	1	-
10	579194101	CARBURETTOR *s/n up to - 20121499999 (ZAMA EL44)*	1	-
10	501463308	CARBURETTOR KIT *From s/n 20121500001-*	1	-
11	526818101	SCREW ITXSCM	4	-
12	505165202	FLANGE	1	-
13	503226503	SQUARE NUT	2	-
14	583964103	INLET PIPE	1	-
14	583964104	INLET PIPE *Cold resistant*	1	-
15	520290901	INTERMEDIATE WALL	1	-
16	525619201	SEALING	1	-
17	525619001	SEALING	1	-
18	523056801	FUEL HOSE	1	-

Ref.	Article N.	Description	Qty	Kit
20	577536401	WIRING ASSY *s/n from 20121500001 -*	1	-
21	582025101	SUPPORT SLEEVE	1	-
22	598934501	FILTER UNIT	1	-
23	731231401	HEXAGON NUT *s/n from 20202700001 -*	1	-
1	598934701	FILTER UNIT	1	-
1	579194101	CARBURETTOR *s/n up to - 20121499999 (ZAMA EL44)*	1	-
1	501463308	CARBURETTOR KIT	1	-
4	522517401	DIAPHRAGM	1	-
5	522517501	GASKET	1	-
6	503479701	VALVE	1	-
7	503665901	LEVER	1	-
8	537383401	SPRING	1	-
12	576414201	MAIN NOZZLE	1	-
17	503481801	SCREW	3	-
21	522517801	THROTTLE LEVER	1	-
26	503535701	STRAINER	1	-
27	537383101	DIAPHRAGM PUMP	1	-
28	537403301	DIAPHRAGM	1	-
29	537020101	GASKET	1	-
32	503479001	SCREW	1	-
46	537177001	VALVE	1	-
50	522518901	GASKET KIT *B=set of gaskets*	1	-
51	582025101	SUPPORT SLEEVE	1	-
1	505200902	HAND GUARD	1	-
2	526834501	SCREW	2	-
3	577780201	BUSHING	2	-
4	505197301	NUT	2	-
5	501846104	CLUTCH COVER ASSY	1	-
6	503751801	PIN	1	-
7	526221801	SCREW CITXPANT	5	-
8	505199301	KNEE JOINT ASSY	1	-
9	503908301	BRAKE SPRING	1	-
10	505199502	BRAKE BAND ASSY	1	-
11	505201601	GUARD	1	-
12	505199703	COVER	1	-

Ref.	Article N.	Description	Qty	Kit
14	523058001	LABEL *- up to s/n 20202399999*	1	-
15	575260404	CHAIN TENSIONER KIT	1	-
16	740480702	O-RING	1	-
17	503230063	WASHER	1	-
20	537017401	BEARING SLEEVE	1	-
22	505199801	CHAIN GUIDE	1	-
1	589809002	CLUTCH ASSY	1	-
2	502164701	CLUTCH SPRING *s/n from 20164100193 -*	3	-
2	580653502	CLUTCH SPRING *s/n from 20132500001 - up to s/n 20164100192*	3	-
3	575261005	CLUTCH DRUM ASSY *- up to s/n 20202200048 .325 x7*	1	-
3	575261006	CLUTCH DRUM *- up to s/n 20202200048 3/8 x7*	1	-
3	575261009	CLUTCH DRUM ASSY	1	-
3	575261010	CLUTCH DRUM ASSY	1	-
4	501457402	RIM SPROCKET *.325x7*	1	-
4	501598002	RIM SPROCKET *3/8x7*	1	-
5	503253401	NEEDLE BEARING	1	-
6	505200801	WORM WHEEL *- up to s/n 20202200048*	1	-
6	586201701	WORM WHEEL *s/n from 20202200049 - .325*	1	-
6	587633001	WORM WHEEL *s/n from 20202200049 - 3/8*	1	-
7	505199908	OIL PUMP ASSY	1	-
8	505200202	PUMP PISTON	1	-
9	505200301	CASING	1	-
10	503230060	WASHER	2	-
11	503891601	SPRING	1	-
12	505157001	ADJUSTMENT SCREW	1	-
14	526818102	SCREW ITXSCM	2	-
15	505200402	OIL HOSE	1	-
16	504710003	OIL PLUMMET	1	-
17	720123300	PARALLEL PIN	2	-
18	503891501	SPRING	1	-
19	505200101	PUMP CYLINDER	1	-

Ref.	Article N.	Description	Qty	Kit
20	503624902	SEALING PLUG	1	-
21	598937705	CLUTCH DRUM ASSY	1	-
21	598937707	CLUTCH DRUM ASSY	1	-
1	588193901	CARBURETTOR AREA BASE	1	-
2	525755202	SCREW ITXSCFM	4	-
3	503869301	SUPPORT	2	-
4	581559201	BELLOWS	1	-
5	575380224	CRANKCASE ASSY	1	-
6	505201101	CHAIN GUIDE PLATE	1	-
7	575793501	SCREW ITXPANM	2	-
8	537403501	FILTER	1	-
9	530026119	CHECK VALVE	1	-
10	537210701	SPRING GUIDE	1	-
11	503436501	POSITION SPRING	1	-
12	505201201	CATCH	1	-
13	503751801	PIN	1	-
14	593806001	GUIDE BUSHING	2	-
15	505217301	BAR BOLT	2	-
16	525824401	SCREW ITXSCM	2	-
17	575841104	SCREW ITXSCM	6	-
19	577935201	SPIKE	1	-
20	537377902	CHAIN CATCHER	1	-
21	525798103	SCREW ITXSCFT	1	-
22	505125801	DEFLECTION LIMITER	1	-
23	595303003	SNAP LOCKING	1	-
24	588065501	AIR NOZZLE	1	-
25	526818101	SCREW ITXSCM	1	-
26	522620003	TANK CAP ASSY	1	-
27	589241101	GASKET	1	-
28	503578901	HOLDER	1	-
29	525391201	RADIAL SEAL *- up to s/n 20202399999*	1	-
30	525887401	SCREW CITXPANT	1	-
31	575270003	GASKET KIT *A=set of gaskets*	1	-
32	574889801	ENCLOSED KIT	1	-
33	596911301	PROTECTIVE CAP *- up to s/n 20224908629*	1	-
1	575545214	CRANKSHAFT ASSY	1	-

Ref.	Article N.	Description	Qty	Kit
		- up to s/n 20202399999		
2	505133505	BALL BEARING	1	-
3	525434204	BALL BEARING	1	-
4	503256302	NEEDLE BEARING	1	-
5	525391201	RADIAL SEAL *- up to s/n 20202399999*	1	-
6	505416101	RADIAL SEAL	1	-
7	575545218	CRANKSHAFT ASSY *s/n from 20202400001 -*	1	-
1	587248504	CYLINDER COVER ASSY *s/n up to - 20202699999*	1	-
2	587149501	LABEL -	1	-
3	587248703	CYLINDER COVER ASSY -	1	-
1	531008615	SPARK PLUG -	1	-
2	582392701	SCREW -	4	-
3	575276901	DECOMPRESSION VALVE -	1	-
4	503552201	PLUG -	1	-
5	576717602	SLEEVE -	4	-
6	510164901	GASKET -	1	-
7	575355806	CYLINDER ASSY -	1	-
8	584807806	PISTON ASSY -	1	-
9	505215701	PISTON RING -	1	-
10	737441000	SNAP RING -	2	-
11	503256302	NEEDLE BEARING -	1	-
12	575270003	GASKET KIT *A=set of gaskets*	1	-
13	520291101	BUSHING -	1	-
1	525887402	SCREW CITXPANT	1	-

Ref.	Article N.	Description	Qty	Kit
2	504106301	HANDLE INSERT	1	-
4	575382205	FUEL TANK ASSY	1	-
5	501152901	TANK VENT ASSY	1	-
6	544099801	THROTTLE LOCKOUT	1	-
7	544099901	SPRING	1	-
8	505157701	THROTTLE	1	-
9	720182520	PARALLEL PIN	1	-
10	521887901	THROTTLE CABLE ASSY	1	-
11	525798103	SCREW ITXSCFT	1	-
12	573993503	FUEL HOSE	1	-
13	503443203	FUEL FILTER *18-40 µm (Blue)*	1	-
14	505165901	COVER	1	-
15	586312103	ANTIVIBRATION ELEMENT	1	-
16	505128702	ANTIVIBRATION ELEMENT	1	-
17	523085501	DEFLECTION LIMITER	1	-
18	501007601	SUPPORT	1	-
19	522620003	TANK CAP ASSY	1	-
20	589241101	GASKET	1	-
21	503578901	HOLDER	1	-
22	525798103	SCREW ITXSCFT	1	-
23	577844301	DECAL	1	-
24	529578202	FUEL HOSE ASSY *From s/n 20161000481 - with magnet*	1	-
1	575388905	FRONT HANDLE	1	-
2	525798103	SCREW ITXSCFT	2	-
3	525798101	SCREW ITXSCFT	3	-
4	505129705	ANTIVIBRATION ELEMENT	1	-
1	581914802	MUFFLER KIT -	1	-
2	724128759	SCREW CRPANM -	1	-
3	505171301	SPARK ARRESTER -	1	-
4	525825106	SCREW ITXSCM *s/n from 20132500001 -*	2	-
5	577656301	SLEEVE *s/n up to - 20132499999*	2	-
6	581918501	GASKET -	1	-

Ref.	Article N.	Description	Qty	Kit
7	585178701	HEAT DEFLECTOR -	1	-
8	577902201	WASHER *s/n up to - 20132499999*	2	-
9	525762501	SCREW ITXSCM -	2	-
10	575270003	GASKET KIT *A=set of gaskets*	1	-
11	725537655	SCREW IHSCM *s/n up to - 20132499999*	2	-
1	505157501	AIR CONDUCTOR -	1	-
2	505159207	STARTER ASSY -	1	-
3	537232501	STARTER HANDLE -	1	-
4	505305125	STARTER ROPE -	1	-
5	576356601	SCREW ITXSCT -	1	-
6	537283201	SLEEVE -	1	-
7	505158101	STARTER PULLEY ASSY -	1	-
8	525887401	SCREW CITXPANT -	2	-
9	598750301	SPRING CASSETTE ASSY -	1	-
10	525824501	SCREW CITXPANMO -	4	-
11	505159102	STARTER HOUSING -	1	-
12	523035601	LABEL -	1	-
1	522795107	IGNITION MODULE ASSY *s/n up to - 20121499999 (14MHz)*	1	-
1	596214001	IGNITION MODULE *s/n from 20121500001 - (8MHz)*	1	-
2	501485404	SPARK PLUG CAP ASSY	1	-
3	525755203	SCREW ITXSCFM	2	-
4	575430601	WIRING ASSY *s/n up to - 20121499999 (14MHz)*	1	-
4	577967601	WIRING ASSY	1	-

Ref.	Article N.	Description	Qty	Kit
		s/n from 20121500001 - (8MHz)		
5	505178201	CABLE HOLDER	1	-
6	585321801	NUT	1	-
7	504872403	FLYWHEEL ASSY	1	-
8	503230042	WASHER	2	-
9	501673501	SPRING	2	-
10	501673201	PAWL	2	-
11	506006901	SCREW	2	-
12	504043505	CABLE COVER	1	-
13	503238501	SHRINKAGE HOSE	2	-
14	525887401	SCREW CITXPANT	1	-

IGNITION SYSTEM

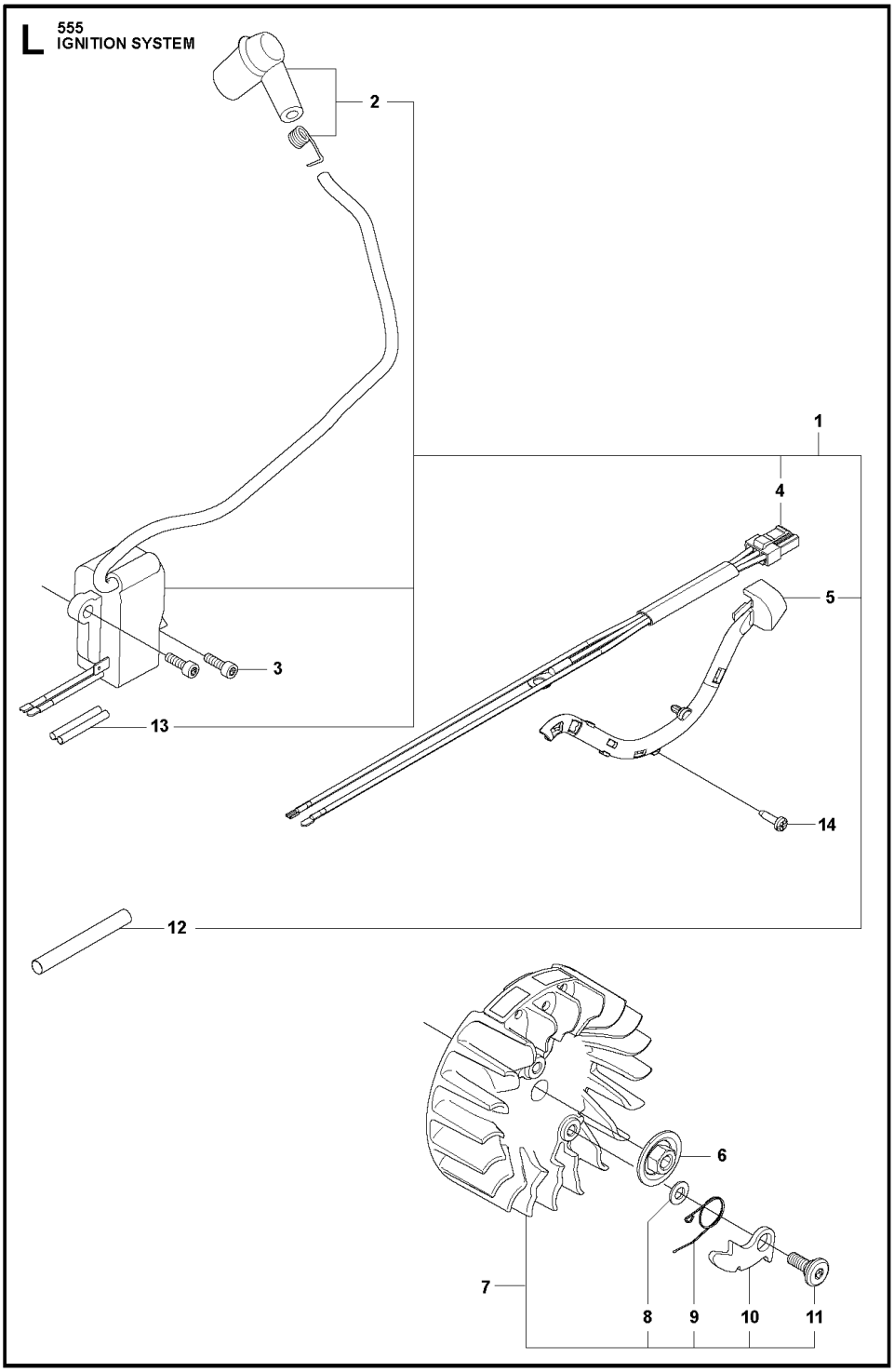

Ref.	Article N.	Description	Qty	Kit
1	575439201	TOOL -	1	-
2	522521101	COMBINATION WRENCH -	1	-
3	503558601	SPANNER -	1	-

Ref.	Article N.	Description	Qty	Kit
4	503558602	SPANNER -	1	-
5	503621201	GREASE -	1	-
6	501911401	GREASE GUN -	1	-
7	583897101	DIAGNOSTIC TOOL KIT -	1	-
8	576183401	CABLE ASSY *Diagnostics cable 14 Mhz*	1	-
9	522986502	WINTER KIT -	1	-
10	505166101	WINTER COVER -	1	-
11	503405901	WINTER PLUG -	1	-
12	503217016	SCREW CCRPANT -	2	-
13	740420100	O-RING -	2	-
14	577014003	SPIKE OUTER -	1	-
15	575793501	SCREW ITXPANM -	2	-
16	577962501	SPIKE OUTER -	1	-
17	503222401	LOCK NUT -	2	-
18	578125501	WINTER PLUG -	1	-
19	574889801	ENCLOSED KIT -	1	-
20	576952201	CABLE ASSY *Diagnostics cable 8 MHz*	1	-
21	503267201	GLUE -	1	-
22	575880701	WRENCH -	1	-
1	505126304	AIR FILTER ASSY *NYLON 80 µm Black s/n up to - 20202699999*	1	-
1	505126305	AIR FILTER ASSY *NYLON 44 µm Yellow s/n up to - 20202699999*	1	-
1	505126306	AIR FILTER ASSY	1	-

Ref.	Article N.	Description	Qty	Kit
		FELT White s/n up to - 20202699999		
1	505126307	AIR FILTER *NYLON 25 µm Orange s/n up to - 20202699999*	1	-
1	590458801	AIR FILTER *NYLON 64 µm Black s/n from 20202700001 -*	1	-
1	590458802	AIR FILTER *NYLON 25 µm Yellow s/n from 20202700001 -*	1	-
1	590458803	AIR FILTER ASSY *Non Woven Nature s/n from 20202700001 -*	1	-
2	525397905	FILTER HOLDER ASSY *s/n up to - 20202699999*	1	-
2	597275501	FILTER HOLDER ASSY *s/n from 20202700001 -*	1	-
3	505176901	SHACKLE *s/n up to - 20202699999*	1	-
4	510017202	CHOKE CONTROL ASSY	1	-
5	505156201	SCREW	1	-
6	525588101	SEALING	1	-
7	503936601	PURGE	1	-
8	574353503	SCREW ITXSCM	2	-
9	525344303	FUEL HOSE *s/n from 20173800688*	1	-
9	589357101	VENTILATING HOSE *s/n up to - 20154500384*	1	-
9	587645404	VENTILATING HOSE *s/n from 20154500385*	1	-
10	579194101	CARBURETTOR *s/n up to - 20121499999 (ZAMA EL44)*	1	-
10	501463308	CARBURETTOR KIT *From s/n 20121500001-*	1	-
11	526818101	SCREW ITXSCM	4	-
12	505165202	FLANGE	1	-
13	503226503	SQUARE NUT	2	-
14	583964103	INLET PIPE	1	-
14	583964104	INLET PIPE *Cold resistant*	1	-
15	520290901	INTERMEDIATE WALL	1	-
16	525619201	SEALING	1	-
17	525619001	SEALING	1	-
18	523056801	FUEL HOSE	1	-

Ref.	Article N.	Description	Qty	Kit
20	577536401	WIRING ASSY *s/n from 20121500001 -*	1	-
21	582025101	SUPPORT SLEEVE	1	-
22	598934501	FILTER UNIT	1	-
23	731231401	HEXAGON NUT *s/n from 20202700001 -*	1	-
1	598934701	FILTER UNIT	1	-
1	579194101	CARBURETTOR *s/n up to - 20121499999 (ZAMA EL44)*	1	-
1	501463308	CARBURETTOR KIT	1	-
4	522517401	DIAPHRAGM	1	-
5	522517501	GASKET	1	-
6	503479701	VALVE	1	-
7	503665901	LEVER	1	-
8	537383401	SPRING	1	-
12	576414201	MAIN NOZZLE	1	-
17	503481801	SCREW	3	-
21	522517801	THROTTLE LEVER	1	-
26	503535701	STRAINER	1	-
27	537383101	DIAPHRAGM PUMP	1	-
28	537403301	DIAPHRAGM	1	-
29	537020101	GASKET	1	-
32	503479001	SCREW	1	-
46	537177001	VALVE	1	-
50	522518901	GASKET KIT *B=set of gaskets*	1	-
51	582025101	SUPPORT SLEEVE	1	-
1	505200902	HAND GUARD	1	-
2	526834501	SCREW	2	-
3	577780201	BUSHING	2	-
4	505197301	NUT	2	-
5	501846104	CLUTCH COVER ASSY	1	-
6	503751801	PIN	1	-
7	526221801	SCREW CITXPANT	5	-
8	505199301	KNEE JOINT ASSY	1	-
9	503908301	BRAKE SPRING	1	-
10	505199502	BRAKE BAND ASSY	1	-
11	505201601	GUARD	1	-
12	505199703	COVER	1	-

Ref.	Article N.	Description	Qty	Kit
14	523058001	LABEL *- up to s/n 20202399999*	1	-
15	575260404	CHAIN TENSIONER KIT	1	-
16	740480702	O-RING	1	-
17	503230063	WASHER	1	-
20	537017401	BEARING SLEEVE	1	-
22	505199801	CHAIN GUIDE	1	-
1	589809002	CLUTCH ASSY	1	-
2	502164701	CLUTCH SPRING *s/n from 20164100193 -*	3	-
2	580653502	CLUTCH SPRING *s/n from 20132500001 - up to s/n 20164100192*	3	-
3	575261005	CLUTCH DRUM ASSY *- up to s/n 20202200048 .325 x7*	1	-
3	575261006	CLUTCH DRUM *- up to s/n 20202200048 3/8 x7*	1	-
3	575261009	CLUTCH DRUM ASSY	1	-
3	575261010	CLUTCH DRUM ASSY	1	-
4	501457402	RIM SPROCKET *.325x7*	1	-
4	501598002	RIM SPROCKET *3/8x7*	1	-
5	503253401	NEEDLE BEARING	1	-
6	505200801	WORM WHEEL *- up to s/n 20202200048*	1	-
6	586201701	WORM WHEEL *s/n from 20202200049 - .325*	1	-
6	587633001	WORM WHEEL *s/n from 20202200049 - 3/8*	1	-
7	505199908	OIL PUMP ASSY	1	-
8	505200202	PUMP PISTON	1	-
9	505200301	CASING	1	-
10	503230060	WASHER	2	-
11	503891601	SPRING	1	-
12	505157001	ADJUSTMENT SCREW	1	-
14	526818102	SCREW ITXSCM	2	-
15	505200402	OIL HOSE	1	-
16	504710003	OIL PLUMMET	1	-
17	720123300	PARALLEL PIN	2	-
18	503891501	SPRING	1	-
19	505200101	PUMP CYLINDER	1	-

Ref.	Article N.	Description	Qty	Kit
20	503624902	SEALING PLUG	1	-
21	598937705	CLUTCH DRUM ASSY	1	-
21	598937707	CLUTCH DRUM ASSY	1	-
1	588193901	CARBURETTOR AREA BASE	1	-
2	525755202	SCREW ITXSCFM	4	-
3	503869301	SUPPORT	2	-
4	581559201	BELLOWS	1	-
5	575380224	CRANKCASE ASSY	1	-
6	505201101	CHAIN GUIDE PLATE	1	-
7	575793501	SCREW ITXPANM	2	-
8	537403501	FILTER	1	-
9	530026119	CHECK VALVE	1	-
10	537210701	SPRING GUIDE	1	-
11	503436501	POSITION SPRING	1	-
12	505201201	CATCH	1	-
13	503751801	PIN	1	-
14	593806001	GUIDE BUSHING	2	-
15	505217301	BAR BOLT	2	-
16	525824401	SCREW ITXSCM	2	-
17	575841104	SCREW ITXSCM	6	-
19	577935201	SPIKE	1	-
20	537377902	CHAIN CATCHER	1	-
21	525798103	SCREW ITXSCFT	1	-
22	505125801	DEFLECTION LIMITER	1	-
23	595303003	SNAP LOCKING	1	-
24	588065501	AIR NOZZLE	1	-
25	526818101	SCREW ITXSCM	1	-
26	522620003	TANK CAP ASSY	1	-
27	589241101	GASKET	1	-
28	503578901	HOLDER	1	-
29	525391201	RADIAL SEAL *- up to s/n 20202399999*	1	-
30	525887401	SCREW CITXPANT	1	-
31	575270003	GASKET KIT *A=set of gaskets*	1	-
32	574889801	ENCLOSED KIT	1	-
33	596911301	PROTECTIVE CAP *- up to s/n 20224908629*	1	-
1	575545214	CRANKSHAFT ASSY	1	-

Ref.	Article N.	Description	Qty	Kit
		- up to s/n 20202399999		
2	505133505	BALL BEARING	1	-
3	525434204	BALL BEARING	1	-
4	503256302	NEEDLE BEARING	1	-
5	525391201	RADIAL SEAL *- up to s/n 20202399999*	1	-
6	505416101	RADIAL SEAL	1	-
7	575545218	CRANKSHAFT ASSY *s/n from 20202400001 -*	1	-
1	587248504	CYLINDER COVER ASSY *s/n up to - 20202699999*	1	-
2	587149501	LABEL -	1	-
3	587248703	CYLINDER COVER ASSY -	1	-
1	531008615	SPARK PLUG -	1	-
2	582392701	SCREW -	4	-
3	575276901	DECOMPRESSION VALVE -	1	-
4	503552201	PLUG -	1	-
5	576717602	SLEEVE -	4	-
6	510164901	GASKET -	1	-
7	575355806	CYLINDER ASSY -	1	-
8	584807806	PISTON ASSY -	1	-
9	505215701	PISTON RING -	1	-
10	737441000	SNAP RING -	2	-
11	503256302	NEEDLE BEARING -	1	-
12	575270003	GASKET KIT *A=set of gaskets*	1	-
13	520291101	BUSHING -	1	-
1	525887402	SCREW CITXPANT	1	-

Ref.	Article N.	Description	Qty	Kit
2	504106301	HANDLE INSERT	1	-
4	575382205	FUEL TANK ASSY	1	-
5	501152901	TANK VENT ASSY	1	-
6	544099801	THROTTLE LOCKOUT	1	-
7	544099901	SPRING	1	-
8	505157701	THROTTLE	1	-
9	720182520	PARALLEL PIN	1	-
10	521887901	THROTTLE CABLE ASSY	1	-
11	525798103	SCREW ITXSCFT	1	-
12	573993503	FUEL HOSE	1	-
13	503443203	FUEL FILTER *18-40 µm (Blue)*	1	-
14	505165901	COVER	1	-
15	586312103	ANTIVIBRATION ELEMENT	1	-
16	505128702	ANTIVIBRATION ELEMENT	1	-
17	523085501	DEFLECTION LIMITER	1	-
18	501007601	SUPPORT	1	-
19	522620003	TANK CAP ASSY	1	-
20	589241101	GASKET	1	-
21	503578901	HOLDER	1	-
22	525798103	SCREW ITXSCFT	1	-
23	577844301	DECAL	1	-
24	529578202	FUEL HOSE ASSY *From s/n 20161000481 - with magnet*	1	-
1	575388905	FRONT HANDLE	1	-
2	525798103	SCREW ITXSCFT	2	-
3	525798101	SCREW ITXSCFT	3	-
4	505129705	ANTIVIBRATION ELEMENT	1	-
1	581914802	MUFFLER KIT -	1	-
2	724128759	SCREW CRPANM -	1	-
3	505171301	SPARK ARRESTER -	1	-
4	525825106	SCREW ITXSCM *s/n from 20132500001 -*	2	-
5	577656301	SLEEVE *s/n up to - 20132499999*	2	-
6	581918501	GASKET -	1	-

Ref.	Article N.	Description	Qty	Kit
7	585178701	HEAT DEFLECTOR -	1	-
8	577902201	WASHER *s/n up to - 20132499999*	2	-
9	525762501	SCREW ITXSCM -	2	-
10	575270003	GASKET KIT *A=set of gaskets*	1	-
11	725537655	SCREW IHSCM *s/n up to - 20132499999*	2	-
1	505157501	AIR CONDUCTOR -	1	-
2	505159207	STARTER ASSY -	1	-
3	537232501	STARTER HANDLE -	1	-
4	505305125	STARTER ROPE -	1	-
5	576356601	SCREW ITXSCT -	1	-
6	537283201	SLEEVE -	1	-
7	505158101	STARTER PULLEY ASSY -	1	-
8	525887401	SCREW CITXPANT -	2	-
9	598750301	SPRING CASSETTE ASSY -	1	-
10	525824501	SCREW CITXPANMO -	4	-
11	505159102	STARTER HOUSING -	1	-
12	523035601	LABEL -	1	-
1	522795107	IGNITION MODULE ASSY *s/n up to - 20121499999 (14MHz)*	1	-
1	596214001	IGNITION MODULE *s/n from 20121500001 - (8MHz)*	1	-
2	501485404	SPARK PLUG CAP ASSY	1	-
3	525755203	SCREW ITXSCFM	2	-
4	575430601	WIRING ASSY *s/n up to - 20121499999 (14MHz)*	1	-
4	577967601	WIRING ASSY	1	-

Ref.	Article N.	Description	Qty	Kit
		s/n from 20121500001 - (8MHz)		
5	505178201	CABLE HOLDER	1	-
6	585321801	NUT	1	-
7	504872403	FLYWHEEL ASSY	1	-
8	503230042	WASHER	2	-
9	501673501	SPRING	2	-
10	501673201	PAWL	2	-
11	506006901	SCREW	2	-
12	504043505	CABLE COVER	1	-
13	503238501	SHRINKAGE HOSE	2	-
14	525887401	SCREW CITXPANT	1	-