Product Catalog: Husqvarna/562 XP® / 562 XP® G / 562 XP® W / 562 XP® GW

ACCESSORIES

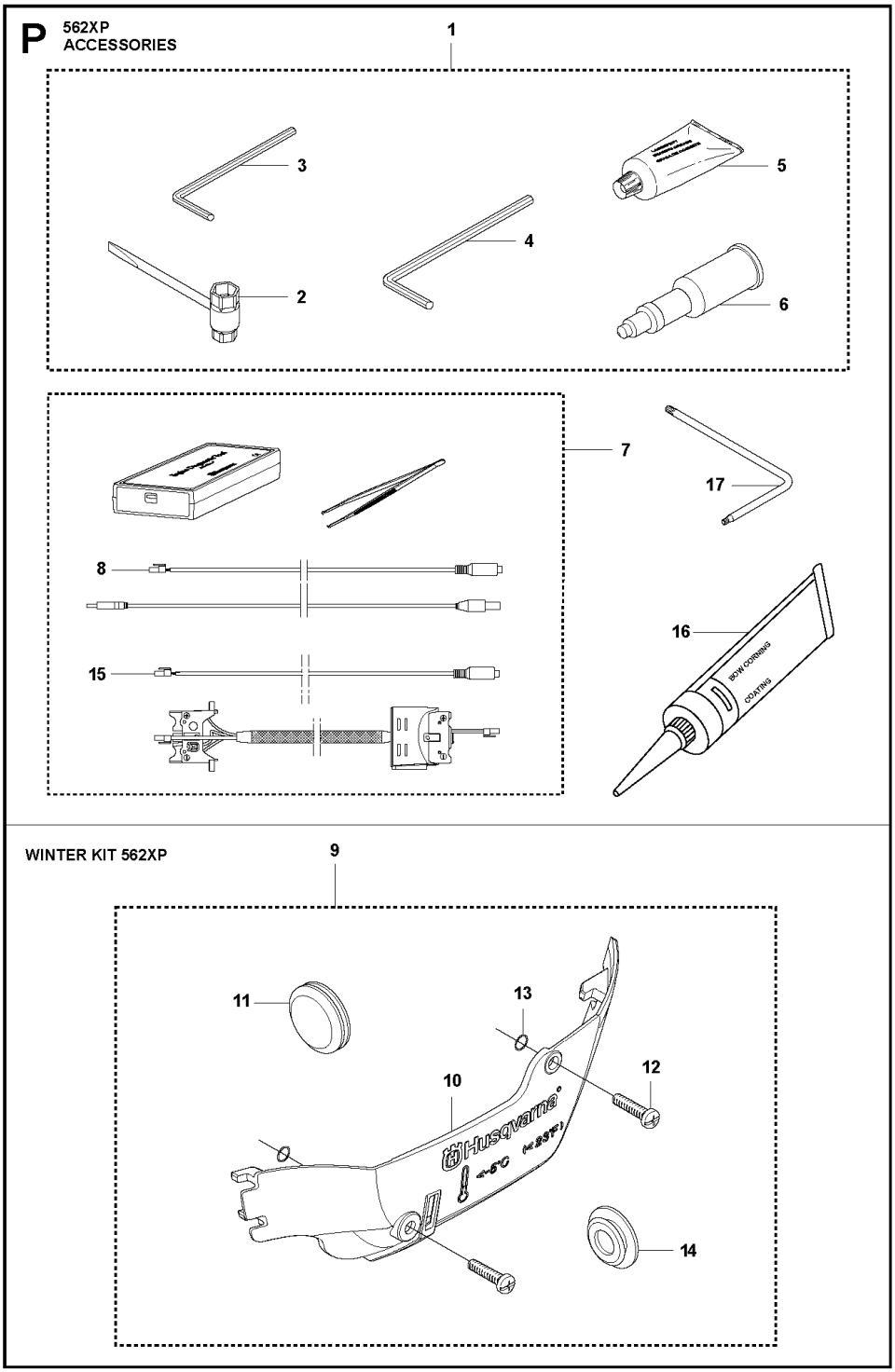

Ref.	Article N.	Description	Qty	Kit
1	575439201	TOOL -	1	-
2	522521101	COMBINATION WRENCH -	1	-
3	503558601	SPANNER -	1	-
4	503558602	SPANNER -	1	-
5	503621201	GREASE -	1	-
6	501911401	GREASE GUN -	1	-
7	583897101	DIAGNOSTIC TOOL KIT -	1	-
8	576183401	CABLE ASSY *Diagnostics cable 14 Mhz*	1	-
9	522986502	WINTER KIT -	1	-
10	505166101	WINTER COVER -	1	-
11	503405901	WINTER PLUG -	1	-
12	503217016	SCREW CCRPANT -	2	-
13	740420100	O-RING -	2	-
14	578125501	WINTER PLUG -	1	-
15	576952201	CABLE ASSY *Diagnostics cable 8 MHz*	1	-
16	503267201	GLUE -	1	-
17	575880701	WRENCH -	1	-
1	579194101	CARBURETTOR *s/n up to - 20121401172 (ZAMA EL44)*	1	-
1	501463307	CARBURETTOR KIT	1	-
4	522517401	DIAPHRAGM	1	-
5	522517501	GASKET	1	-
6	503479701	VALVE	1	-
7	503665901	LEVER	1	-
8	537383401	SPRING	1	-

Ref.	Article N.	Description	Qty	Kit
12	576414201	MAIN NOZZLE	1	-
17	503481801	SCREW	3	-
21	522517801	THROTTLE LEVER	1	-
26	503535701	STRAINER	1	-
27	537383101	DIAPHRAGM PUMP	1	-
28	537403301	DIAPHRAGM	1	-
29	537020101	GASKET	1	-
32	503479001	SCREW	1	-
46	537177001	VALVE	1	-
50	522518901	GASKET KIT *B=set of gaskets*	1	-
51	582025101	SUPPORT SLEEVE	1	-
1	525250602	HAND GUARD -	1	-
2	526834501	SCREW -	2	-
3	577780201	BUSHING -	2	-
4	505197301	NUT -	2	-
5	525743305	CLUTCH COVER ASSY -	1	-
6	503751801	PIN -	1	-
7	526221801	SCREW CITXPANT -	5	-
8	505199301	KNEE JOINT ASSY -	1	-
9	503908301	BRAKE SPRING -	1	-
10	505199502	BRAKE BAND ASSY -	1	-
11	505201601	GUARD -	1	-
12	505199703	COVER -	1	-
14	523058001	LABEL *- up to s/n 20202399999*	1	-
15	575260402	CHAIN TENSIONER KIT -	1	-
16	740480702	O-RING -	1	-

Ref.	Article N.	Description	Qty	Kit
17	503230063	WASHER -	1	-
20	537017401	BEARING SLEEVE -	1	-
22	525388701	CHAIN GUIDE -	1	-
23	575793501	SCREW ITXPANM -	2	-
24	577975201	SPIKE OUTER -	1	-
25	503222401	LOCK NUT -	2	-
1	589809002	CLUTCH ASSY -	1	-
2	580653502	CLUTCH SPRING *s/n from 20133400001 - up to s/n 20164100192*	3	-
2	502164701	CLUTCH SPRING *s/n from 20164100193 -*	1	-
3	575261006	CLUTCH DRUM *- up to s/n 20202200048 3/8 x7*	1	-
3	575261005	CLUTCH DRUM ASSY *- up to s/n 20202200048 .325 x7*	1	-
3	575261010	CLUTCH DRUM ASSY -	1	-
4	501457402	RIM SPROCKET -	1	-
4	501598002	RIM SPROCKET *3/8x7*	1	-
5	503253401	NEEDLE BEARING -	1	-
6	577601101	WORM WHEEL *- up to s/n 20202200048*	1	-
6	586204601	WORM WHEEL *s/n from 20202200049 - 3/8*	1	-
7	505199909	OIL PUMP ASSY -	1	-
8	505200203	PUMP PISTON -	1	-
9	505200301	CASING -	1	-
10	503230060	WASHER -	2	-
11	503891601	SPRING	1	-

Ref.	Article N.	Description	Qty	Kit
		-		
12	505157001	ADJUSTMENT SCREW -	1	-
14	526818102	SCREW ITXSCM -	2	-
15	575847801	OIL HOSE -	1	-
16	504710003	OIL PLUMMET -	1	-
17	720123300	PARALLEL PIN -	2	-
18	503891501	SPRING -	1	-
19	505200101	PUMP CYLINDER -	1	-
20	503624903	SEALING PLUG -	1	-
21	598937706	CLUTCH DRUM ASSY -	1	-
1	588193901	CARBURETTOR AREA BASE	1	-
2	525755202	SCREW ITXSCFM	4	-
3	503869301	SUPPORT	2	-
4	581559201	BELLOWS	1	-
5	575380226	CRANKCASE ASSY	1	-
6	522742901	CHAIN GUIDE PLATE	1	-
7	575793501	SCREW ITXPANM	2	-
8	537403501	FILTER	1	-
9	530026119	CHECK VALVE	1	-
10	537210701	SPRING GUIDE	1	-
11	503436501	POSITION SPRING	1	-
12	505201201	CATCH	1	-
13	503751801	PIN	1	-
14	593806001	GUIDE BUSHING	2	-
15	522893801	BAR BOLT	2	-
16	525824401	SCREW ITXSCM	2	-
17	575841104	SCREW ITXSCM	6	-
18	537088301	GROMMET	1	-
19	577935201	SPIKE	1	-
20	522893901	CHAIN CATCHER	1	-
21	525798103	SCREW ITXSCFT	1	-

Ref.	Article N.	Description	Qty	Kit
22	505125801	DEFLECTION LIMITER	1	-
23	595303003	SNAP LOCKING	1	-
24	588065501	AIR NOZZLE	1	-
25	526818101	SCREW ITXSCM	1	-
26	522620003	TANK CAP ASSY	1	-
27	589241101	GASKET	1	-
28	503578901	HOLDER	1	-
29	525391201	RADIAL SEAL *- up to s/n 20202399999*	2	-
30	525887401	SCREW CITXPANT	1	-
31	575270003	GASKET KIT *A=set of gaskets*	1	-
32	525347601	BUMPER	1	-
33	577386801	CHAIN GUIDE	1	-
34	525887401	SCREW CITXPANT	1	-
35	526221801	SCREW CITXPANT	1	-
36	596911301	PROTECTIVE CAP *-up to s/n 20230403564*	1	-
1	575545215	CRANKSHAFT ASSY *- up to s/n 20202399999*	1	-
2	505133505	BALL BEARING	1	-
3	505133601	CUP	2	-
4	503256302	NEEDLE BEARING	1	-
5	525434204	BALL BEARING	2	-
6	525391201	RADIAL SEAL *- up to s/n 20202399999*	1	-
7	505416101	RADIAL SEAL	1	-
8	575545222	CRANKSHAFT ASSY *s/n from 20202400001 -*	1	-
1	587248702	CYLINDER COVER ASSY -	1	-
2	587149501	LABEL -	1	-
1	574519601	SPARK PLUG	1	-
2	582392701	SCREW	4	-
3	575276901	DECOMPRESSION VALVE	1	-
4	503552201	PLUG	1	-
5	576717602	SLEEVE	4	-
6	510164901	GASKET	1	-
7	575355805	CYLINDER ASSY	1	-

Ref.	Article N.	Description	Qty	Kit
		up to s/n - 201399999		
8	584807806	PISTON ASSY *up to s/n - 201399999*	1	-
9	505215701	PISTON RING *up to s/n - 20222500120*	1	-
10	737441000	SNAP RING	2	-
11	503256302	NEEDLE BEARING	1	-
12	575270003	GASKET KIT *A=set of gaskets*	1	-
13	520291101	BUSHING	1	-
14	575355807	CYLINDER ASSY *s/n from 20141400001 -*	1	-
15	529504701	PISTON ASSY *s/n from 20141400001 -*	1	-
16	599998401	PISTON RING *s/n from 20222500121 -*	1	-
1	525887402	SCREW CITXPANT	1	-
2	504106301	HANDLE INSERT	1	-
4	575382205	FUEL TANK ASSY	1	-
5	501152901	TANK VENT ASSY	1	-
6	544099801	THROTTLE LOCKOUT	1	-
7	544099901	SPRING	1	-
8	505157701	THROTTLE	1	-
9	720182520	PARALLEL PIN	1	-
10	521887901	THROTTLE CABLE ASSY	1	-
11	525798102	SCREW ITXSCFT	1	-
12	573993503	FUEL HOSE	1	-
13	503443203	FUEL FILTER *18-40 µm (Blue)*	1	-
14	505165901	COVER *not XPW*	1	-
15	586312103	ANTIVIBRATION ELEMENT	1	-
16	505128702	ANTIVIBRATION ELEMENT	1	-
17	523085501	DEFLECTION LIMITER	1	-
18	501007601	SUPPORT	1	-
19	522620003	TANK CAP ASSY	1	-
20	589241101	GASKET	1	-
21	503578901	HOLDER	1	-
22	525798103	SCREW ITXSCFT	1	-
23	577844301	DECAL	1	-

Ref.	Article N.	Description	Qty	Kit
24	529578202	FUEL HOSE ASSY *From s/n 20161000481- with magnet*	1	-
1	586146304	HANDLE SYSTEM -	1	-
2	525798103	SCREW ITXSCFT -	3	-
3	510097801	CONTACT PLATE -	1	-
4	537252501	CONTACT PLATE -	1	-
5	525887401	SCREW CITXPANT -	1	-
6	505157403	COVER -	1	-
7	525798101	SCREW ITXSCFT -	2	-
8	505129705	ANTIVIBRATION ELEMENT -	1	-
9	505156904	FRONT HANDLE ASSY *incl. 5743863-01*	1	-
11	537088301	GROMMET -	1	-
12	576873004	SPIKE -	1	-
13	575793501	SCREW ITXPANM -	2	-
14	503222401	LOCK NUT -	2	-
15	577976301	SPIKE OUTER -	1	-
16	577976101	SPIKE -	1	-
17	525755103	SCREW ITXSCFM -	1	-
18	537024401	WEAR PROTECTION -	1	-
19	537089201	CHAIN CATCHER -	1	-
20	503222401	LOCK NUT -	1	-
1	576945104	SCREW KIT *Only screws*	1	-
2	525798103	SCREW ITXSCFT	3	-

Ref.	Article N.	Description	Qty	Kit
		-		
3	525798101	SCREW ITXSCFT -	1	-
4	505129705	ANTIVIBRATION ELEMENT -	1	-
5	505156903	FRONT HANDLE ASSY *incl. 5743863-01*	1	-
6	576873004	SPIKE -	1	-
7	575793501	SCREW ITXPANM -	2	-
8	503222401	LOCK NUT -	2	-
9	577976301	SPIKE OUTER *Spike Wrap*	1	-
10	577976101	SPIKE *Spike Wrap*	1	-
11	525755103	SCREW ITXSCFM -	1	-
12	537024401	WEAR PROTECTION -	1	-
13	537089201	CHAIN CATCHER -	1	-
14	503222401	LOCK NUT -	1	-
15	588966401	HANDLE -	1	-
1	575388905	FRONT HANDLE	1	-
2	525798103	SCREW ITXSCFT	2	-
3	525798101	SCREW ITXSCFT	3	-
4	505129705	ANTIVIBRATION ELEMENT	1	-
1	522741901	HANDLE INSERT -	1	-
2	578864601	THERMOSTAT ASSY -	1	-
3	537210801	RETAINER -	1	-
4	522611401	GENERATOR STATOR -	1	-
5	526818102	SCREW ITXSCM -	2	-

Ref.	Article N.	Description	Qty	Kit
6	588168602	FOIL ELEMENT -	1	-
7	575388904	FRONT HANDLE -	1	-
8	525798103	SCREW ITXSCFT -	2	-
9	505157403	COVER -	1	-
10	537252501	CONTACT PLATE -	1	-
11	510097801	CONTACT PLATE -	1	-
12	525887402	SCREW CITXPANT -	1	-
13	504872404	FLYWHEEL ASSY -	1	-
14	503220401	NUT -	1	-
15	503230042	WASHER -	2	-
16	501673501	SPRING -	2	-
17	501673201	PAWL -	2	-
18	506006901	SCREW -	2	-
19	505129705	ANTIVIBRATION ELEMENT -	1	-
20	525798101	SCREW ITXSCFT -	3	-
21	537088301	GROMMET -	1	-
22	582829601	THERMOSTAT ASSY *s/n up to 20164199999*	1	-
1	522795106	IGNITION MODULE ASSY *s/n up to - 20121401172 (14MHz)*	1	-
1	587306701	IGNITION MODULE *s/n from 20121401173 - (8MHz)*	1	-
2	501485404	SPARK PLUG CAP ASSY	1	-
3	525755203	SCREW ITXSCFM	2	-
4	575430601	WIRING ASSY *s/n up to - 20121401172 (14MHz)*	1	-
4	577967601	WIRING ASSY	1	-

Ref.	Article N.	Description	Qty	Kit
		s/n from 20121401173 - (8MHz)		
5	505178201	CABLE HOLDER	1	-
6	585321801	NUT	1	-
7	504872403	FLYWHEEL ASSY *XP*	1	-
7	504872404	FLYWHEEL ASSY *XPG*	1	-
8	503230042	WASHER	2	-
9	501673501	SPRING	2	-
10	501673201	PAWL	2	-
11	506006901	SCREW	2	-
12	504043505	CABLE COVER	1	-
13	503238501	SHRINKAGE HOSE	2	-
14	525887401	SCREW CITXPANT	1	-
1	581914802	MUFFLER KIT -	1	-
2	724128759	SCREW CRPANM -	1	-
3	505171301	SPARK ARRESTER -	1	-
4	525825106	SCREW ITXSCM *s/n from 20133400001 -*	2	-
5	577656301	SLEEVE *s/n up to - 20133399999*	2	-
6	581918501	GASKET -	1	-
7	585178701	HEAT DEFLECTOR -	1	-
8	577902201	WASHER *s/n up to - 20133399999*	2	-
9	525762501	SCREW ITXSCM -	2	-
10	575270003	GASKET KIT *A=set of gaskets*	1	-
11	725537655	SCREW IHSCM *s/n up to - 20133399999*	2	-
1	580663714	SHORT BLOCK	1	-
1	505157501	AIR CONDUCTOR -	1	-
2	505159207	STARTER ASSY -	1	-
3	537232501	STARTER HANDLE	1	-

Ref.	Article N.	Description	Qty	Kit
		-		
4	505305125	STARTER ROPE -	1	-
5	576356601	SCREW ITXSCT -	1	-
6	537283201	SLEEVE -	1	-
7	505158101	STARTER PULLEY ASSY -	1	-
8	525887401	SCREW CITXPANT -	2	-
9	598750301	SPRING CASSETTE ASSY -	1	-
10	525824501	SCREW CITXPANMO -	4	-
11	505159102	STARTER HOUSING -	1	-
12	523035606	LABEL *XPG*	1	-
12	523035605	LABEL *XP*	1	-
1	522675001	AIR FILTER ASSY *Nylon Mesh - 80 Micron Rating - Black - s/n up to - 20202600072*	1	-
1	522675002	AIR FILTER ASSY *Nylon Mesh - 44 Micron Rating - Yellow - s/n up to - 20202600072*	1	-
1	522675003	AIR FILTER ASSY *Non-Woven - White - s/n up to - 20202600072*	1	-
1	522675004	AIR FILTER ASSY *Nylon Mesh - 25 Micron Rating - Orange - s/n up to - 20202600072*	1	-
1	590458801	AIR FILTER *Nylon Mesh - 64 Micron Rating - Black - s/n from 20202600073 -*	1	-
1	590458802	AIR FILTER *Nylon Mesh - 25 Micron Rating - Yellow - s/n from 20202600073 -*	1	-
1	590458803	AIR FILTER ASSY *Non-Woven - Clear - s/n from 20202600073 -*	1	-
2	525397906	FILTER HOLDER ASSY *XPG s/n up to - 20202600072*	1	-
2	525397905	FILTER HOLDER ASSY *XP s/n up to - 20202600072*	1	-
2	597275501	FILTER HOLDER ASSY *XP s/n from 20202600073 -*	1	-
2	597275502	FILTER HOLDER ASSY *XPG s/n from 20202600073 -*	1	-

Ref.	Article N.	Description	Qty	Kit
3	505176901	SHACKLE *s/n up to - 20202600072*	1	-
4	510017202	CHOKE CONTROL ASSY	1	-
5	505156201	SCREW	1	-
6	525588101	SEALING	1	-
7	503936601	PURGE	1	-
8	574353503	SCREW ITXSCM	2	-
9	525344303	FUEL HOSE *XP s/n from 20173800688*	1	-
9	589357101	VENTILATING HOSE *s/n up to - 20154799999*	1	-
9	587645404	VENTILATING HOSE *s/n from 20154800001*	1	-
10	579194101	CARBURETTOR *s/n up to - 20121401172 (ZAMA EL44)*	1	-
10	501463307	CARBURETTOR KIT *s/n from 2012401173*	1	-
11	526818101	SCREW ITXSCM	4	-
12	505165202	FLANGE	1	-
13	503226503	SQUARE NUT	2	-
14	583964103	INLET PIPE	1	-
14	583964104	INLET PIPE *Cold resistant*	1	-
15	520290901	INTERMEDIATE WALL	1	-
16	525619201	SEALING	1	-
17	525619001	SEALING	1	-
18	523056801	FUEL HOSE	1	-
20	577536401	WIRING ASSY *s/n from 20121401173 -*	1	-
21	582025101	SUPPORT SLEEVE	1	-
22	598934501	FILTER UNIT *XP*	1	-
22	598934502	FILTER UNIT *XPG*	1	-
23	731231401	HEXAGON NUT *s/n from 20202600073 -*	1	-

CARBURETOR DETAILS

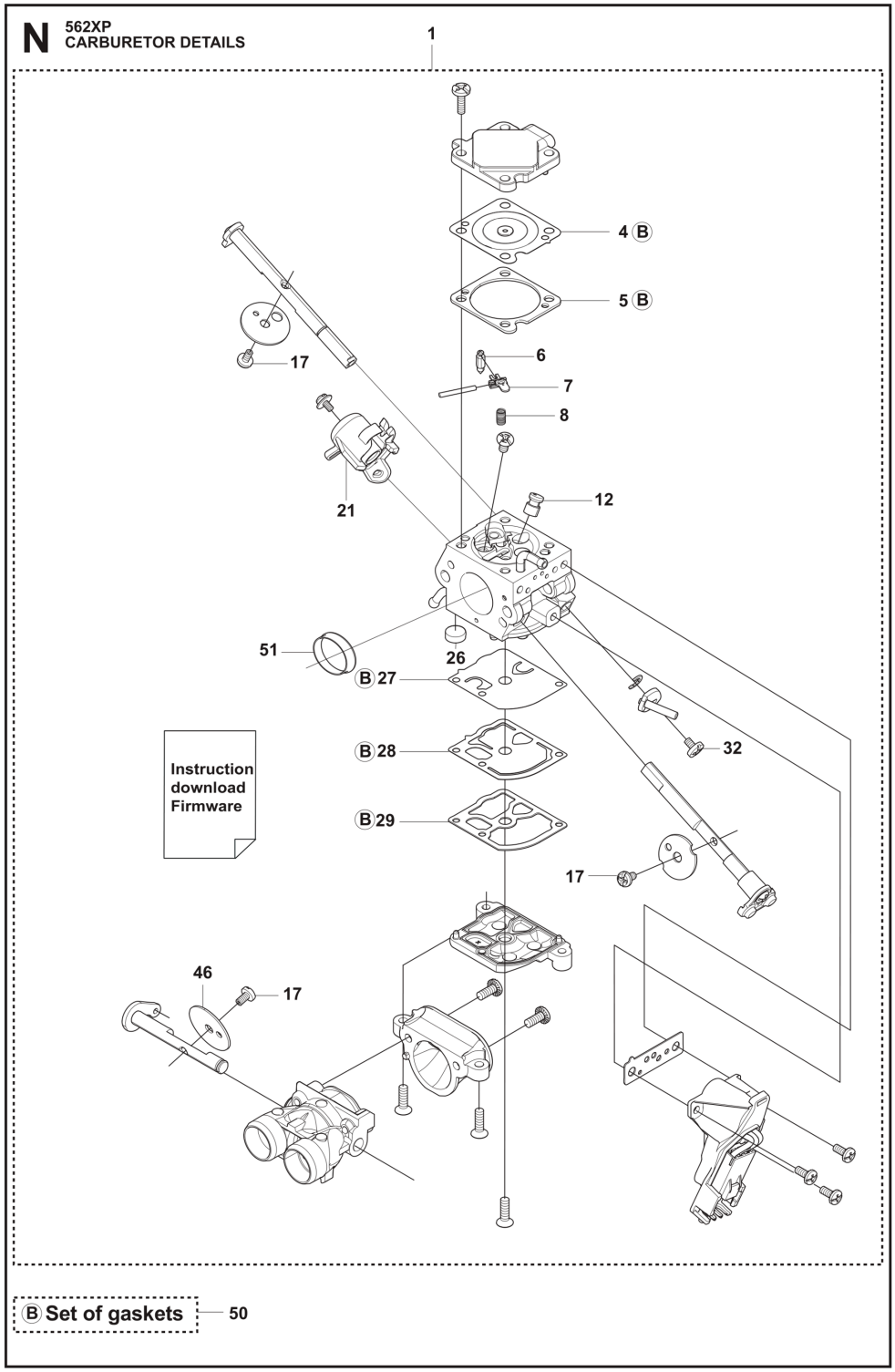

Ref.	Article N.	Description	Qty	Kit
1	575439201	TOOL -	1	-
2	522521101	COMBINATION WRENCH -	1	-
3	503558601	SPANNER -	1	-

Ref.	Article N.	Description	Qty	Kit
4	503558602	SPANNER -	1	-
5	503621201	GREASE -	1	-
6	501911401	GREASE GUN -	1	-
7	583897101	DIAGNOSTIC TOOL KIT -	1	-
8	576183401	CABLE ASSY *Diagnostics cable 14 Mhz*	1	-
9	522986502	WINTER KIT -	1	-
10	505166101	WINTER COVER -	1	-
11	503405901	WINTER PLUG -	1	-
12	503217016	SCREW CCRPANT -	2	-
13	740420100	O-RING -	2	-
14	578125501	WINTER PLUG -	1	-
15	576952201	CABLE ASSY *Diagnostics cable 8 MHz*	1	-
16	503267201	GLUE -	1	-
17	575880701	WRENCH -	1	-
1	579194101	CARBURETTOR *s/n up to - 20121401172 (ZAMA EL44)*	1	-
1	501463307	CARBURETTOR KIT	1	-
4	522517401	DIAPHRAGM	1	-
5	522517501	GASKET	1	-
6	503479701	VALVE	1	-
7	503665901	LEVER	1	-
8	537383401	SPRING	1	-
12	576414201	MAIN NOZZLE	1	-
17	503481801	SCREW	3	-
21	522517801	THROTTLE LEVER	1	-
26	503535701	STRAINER	1	-
27	537383101	DIAPHRAGM PUMP	1	-
28	537403301	DIAPHRAGM	1	-

Ref.	Article N.	Description	Qty	Kit
29	537020101	GASKET	1	-
32	503479001	SCREW	1	-
46	537177001	VALVE	1	-
50	522518901	GASKET KIT *B=set of gaskets*	1	-
51	582025101	SUPPORT SLEEVE	1	-
1	525250602	HAND GUARD -	1	-
2	526834501	SCREW -	2	-
3	577780201	BUSHING -	2	-
4	505197301	NUT -	2	-
5	525743305	CLUTCH COVER ASSY -	1	-
6	503751801	PIN -	1	-
7	526221801	SCREW CITXPANT -	5	-
8	505199301	KNEE JOINT ASSY -	1	-
9	503908301	BRAKE SPRING -	1	-
10	505199502	BRAKE BAND ASSY -	1	-
11	505201601	GUARD -	1	-
12	505199703	COVER -	1	-
14	523058001	LABEL *- up to s/n 20202399999*	1	-
15	575260402	CHAIN TENSIONER KIT -	1	-
16	740480702	O-RING -	1	-
17	503230063	WASHER -	1	-
20	537017401	BEARING SLEEVE -	1	-
22	525388701	CHAIN GUIDE -	1	-

Ref.	Article N.	Description	Qty	Kit
23	575793501	SCREW ITXPANM -	2	-
24	577975201	SPIKE OUTER -	1	-
25	503222401	LOCK NUT -	2	-
1	589809002	CLUTCH ASSY -	1	-
2	580653502	CLUTCH SPRING *s/n from 20133400001 - up to s/n 20164100192*	3	-
2	502164701	CLUTCH SPRING *s/n from 20164100193 -*	1	-
3	575261006	CLUTCH DRUM *- up to s/n 20202200048 3/8 x7*	1	-
3	575261005	CLUTCH DRUM ASSY *- up to s/n 20202200048 .325 x7*	1	-
3	575261010	CLUTCH DRUM ASSY -	1	-
4	501457402	RIM SPROCKET -	1	-
4	501598002	RIM SPROCKET *3/8x7*	1	-
5	503253401	NEEDLE BEARING -	1	-
6	577601101	WORM WHEEL *- up to s/n 20202200048*	1	-
6	586204601	WORM WHEEL *s/n from 20202200049 - 3/8*	1	-
7	505199909	OIL PUMP ASSY -	1	-
8	505200203	PUMP PISTON -	1	-
9	505200301	CASING -	1	-
10	503230060	WASHER -	2	-
11	503891601	SPRING -	1	-
12	505157001	ADJUSTMENT SCREW -	1	-
14	526818102	SCREW ITXSCM -	2	-
15	575847801	OIL HOSE	1	-

Ref.	Article N.	Description	Qty	Kit
		-		
16	504710003	OIL PLUMMET -	1	-
17	720123300	PARALLEL PIN -	2	-
18	503891501	SPRING -	1	-
19	505200101	PUMP CYLINDER -	1	-
20	503624903	SEALING PLUG -	1	-
21	598937706	CLUTCH DRUM ASSY -	1	-
1	588193901	CARBURETTOR AREA BASE	1	-
2	525755202	SCREW ITXSCFM	4	-
3	503869301	SUPPORT	2	-
4	581559201	BELLOWS	1	-
5	575380226	CRANKCASE ASSY	1	-
6	522742901	CHAIN GUIDE PLATE	1	-
7	575793501	SCREW ITXPANM	2	-
8	537403501	FILTER	1	-
9	530026119	CHECK VALVE	1	-
10	537210701	SPRING GUIDE	1	-
11	503436501	POSITION SPRING	1	-
12	505201201	CATCH	1	-
13	503751801	PIN	1	-
14	593806001	GUIDE BUSHING	2	-
15	522893801	BAR BOLT	2	-
16	525824401	SCREW ITXSCM	2	-
17	575841104	SCREW ITXSCM	6	-
18	537088301	GROMMET	1	-
19	577935201	SPIKE	1	-
20	522893901	CHAIN CATCHER	1	-
21	525798103	SCREW ITXSCFT	1	-
22	505125801	DEFLECTION LIMITER	1	-
23	595303003	SNAP LOCKING	1	-
24	588065501	AIR NOZZLE	1	-
25	526818101	SCREW ITXSCM	1	-
26	522620003	TANK CAP ASSY	1	-
27	589241101	GASKET	1	-

Ref.	Article N.	Description	Qty	Kit
28	503578901	HOLDER	1	-
29	525391201	RADIAL SEAL *- up to s/n 20202399999*	2	-
30	525887401	SCREW CITXPANT	1	-
31	575270003	GASKET KIT *A=set of gaskets*	1	-
32	525347601	BUMPER	1	-
33	577386801	CHAIN GUIDE	1	-
34	525887401	SCREW CITXPANT	1	-
35	526221801	SCREW CITXPANT	1	-
36	596911301	PROTECTIVE CAP *-up to s/n 20230403564*	1	-
1	575545215	CRANKSHAFT ASSY *- up to s/n 20202399999*	1	-
2	505133505	BALL BEARING	1	-
3	505133601	CUP	2	-
4	503256302	NEEDLE BEARING	1	-
5	525434204	BALL BEARING	2	-
6	525391201	RADIAL SEAL *- up to s/n 20202399999*	1	-
7	505416101	RADIAL SEAL	1	-
8	575545222	CRANKSHAFT ASSY *s/n from 20202400001 -*	1	-
1	587248702	CYLINDER COVER ASSY -	1	-
2	587149501	LABEL -	1	-
1	574519601	SPARK PLUG	1	-
2	582392701	SCREW	4	-
3	575276901	DECOMPRESSION VALVE	1	-
4	503552201	PLUG	1	-
5	576717602	SLEEVE	4	-
6	510164901	GASKET	1	-
7	575355805	CYLINDER ASSY *up to s/n - 201399999*	1	-
8	584807806	PISTON ASSY *up to s/n - 201399999*	1	-
9	505215701	PISTON RING *up to s/n - 20222500120*	1	-
10	737441000	SNAP RING	2	-
11	503256302	NEEDLE BEARING	1	-

Ref.	Article N.	Description	Qty	Kit
12	575270003	GASKET KIT *A=set of gaskets*	1	-
13	520291101	BUSHING	1	-
14	575355807	CYLINDER ASSY *s/n from 20141400001 -*	1	-
15	529504701	PISTON ASSY *s/n from 20141400001 -*	1	-
16	599998401	PISTON RING *s/n from 20222500121 -*	1	-
1	525887402	SCREW CITXPANT	1	-
2	504106301	HANDLE INSERT	1	-
4	575382205	FUEL TANK ASSY	1	-
5	501152901	TANK VENT ASSY	1	-
6	544099801	THROTTLE LOCKOUT	1	-
7	544099901	SPRING	1	-
8	505157701	THROTTLE	1	-
9	720182520	PARALLEL PIN	1	-
10	521887901	THROTTLE CABLE ASSY	1	-
11	525798102	SCREW ITXSCFT	1	-
12	573993503	FUEL HOSE	1	-
13	503443203	FUEL FILTER *18-40 µm (Blue)*	1	-
14	505165901	COVER *not XPW*	1	-
15	586312103	ANTIVIBRATION ELEMENT	1	-
16	505128702	ANTIVIBRATION ELEMENT	1	-
17	523085501	DEFLECTION LIMITER	1	-
18	501007601	SUPPORT	1	-
19	522620003	TANK CAP ASSY	1	-
20	589241101	GASKET	1	-
21	503578901	HOLDER	1	-
22	525798103	SCREW ITXSCFT	1	-
23	577844301	DECAL	1	-
24	529578202	FUEL HOSE ASSY *From s/n 20161000481- with magnet*	1	-
1	586146304	HANDLE SYSTEM -	1	-
2	525798103	SCREW ITXSCFT -	3	-
3	510097801	CONTACT PLATE -	1	-

Ref.	Article N.	Description	Qty	Kit
4	537252501	CONTACT PLATE -	1	-
5	525887401	SCREW CITXPANT -	1	-
6	505157403	COVER -	1	-
7	525798101	SCREW ITXSCFT -	2	-
8	505129705	ANTIVIBRATION ELEMENT -	1	-
9	505156904	FRONT HANDLE ASSY *incl. 5743863-01*	1	-
11	537088301	GROMMET -	1	-
12	576873004	SPIKE -	1	-
13	575793501	SCREW ITXPANM -	2	-
14	503222401	LOCK NUT -	2	-
15	577976301	SPIKE OUTER -	1	-
16	577976101	SPIKE -	1	-
17	525755103	SCREW ITXSCFM -	1	-
18	537024401	WEAR PROTECTION -	1	-
19	537089201	CHAIN CATCHER -	1	-
20	503222401	LOCK NUT -	1	-
1	576945104	SCREW KIT *Only screws*	1	-
2	525798103	SCREW ITXSCFT -	3	-
3	525798101	SCREW ITXSCFT -	1	-
4	505129705	ANTIVIBRATION ELEMENT -	1	-
5	505156903	FRONT HANDLE ASSY *incl. 5743863-01*	1	-
6	576873004	SPIKE	1	-

Ref.	Article N.	Description	Qty	Kit
		-		
7	575793501	SCREW ITXPANM -	2	-
8	503222401	LOCK NUT -	2	-
9	577976301	SPIKE OUTER *Spike Wrap*	1	-
10	577976101	SPIKE *Spike Wrap*	1	-
11	525755103	SCREW ITXSCFM -	1	-
12	537024401	WEAR PROTECTION -	1	-
13	537089201	CHAIN CATCHER -	1	-
14	503222401	LOCK NUT -	1	-
15	588966401	HANDLE -	1	-
1	575388905	FRONT HANDLE	1	-
2	525798103	SCREW ITXSCFT	2	-
3	525798101	SCREW ITXSCFT	3	-
4	505129705	ANTIVIBRATION ELEMENT	1	-
1	522741901	HANDLE INSERT -	1	-
2	578864601	THERMOSTAT ASSY -	1	-
3	537210801	RETAINER -	1	-
4	522611401	GENERATOR STATOR -	1	-
5	526818102	SCREW ITXSCM -	2	-
6	588168602	FOIL ELEMENT -	1	-
7	575388904	FRONT HANDLE -	1	-
8	525798103	SCREW ITXSCFT -	2	-
9	505157403	COVER -	1	-

Ref.	Article N.	Description	Qty	Kit
10	537252501	CONTACT PLATE -	1	-
11	510097801	CONTACT PLATE -	1	-
12	525887402	SCREW CITXPANT -	1	-
13	504872404	FLYWHEEL ASSY -	1	-
14	503220401	NUT -	1	-
15	503230042	WASHER -	2	-
16	501673501	SPRING -	2	-
17	501673201	PAWL -	2	-
18	506006901	SCREW -	2	-
19	505129705	ANTIVIBRATION ELEMENT -	1	-
20	525798101	SCREW ITXSCFT -	3	-
21	537088301	GROMMET -	1	-
22	582829601	THERMOSTAT ASSY *s/n up to 20164199999*	1	-
1	522795106	IGNITION MODULE ASSY *s/n up to - 20121401172 (14MHz)*	1	-
1	587306701	IGNITION MODULE *s/n from 20121401173 - (8MHz)*	1	-
2	501485404	SPARK PLUG CAP ASSY	1	-
3	525755203	SCREW ITXSCFM	2	-
4	575430601	WIRING ASSY *s/n up to - 20121401172 (14MHz)*	1	-
4	577967601	WIRING ASSY *s/n from 20121401173 - (8MHz)*	1	-
5	505178201	CABLE HOLDER	1	-
6	585321801	NUT	1	-
7	504872403	FLYWHEEL ASSY *XP*	1	-
7	504872404	FLYWHEEL ASSY *XPG*	1	-

Ref.	Article N.	Description	Qty	Kit
8	503230042	WASHER	2	-
9	501673501	SPRING	2	-
10	501673201	PAWL	2	-
11	506006901	SCREW	2	-
12	504043505	CABLE COVER	1	-
13	503238501	SHRINKAGE HOSE	2	-
14	525887401	SCREW CITXPANT	1	-
1	581914802	MUFFLER KIT -	1	-
2	724128759	SCREW CRPANM -	1	-
3	505171301	SPARK ARRESTER -	1	-
4	525825106	SCREW ITXSCM *s/n from 20133400001 -*	2	-
5	577656301	SLEEVE *s/n up to - 20133399999*	2	-
6	581918501	GASKET -	1	-
7	585178701	HEAT DEFLECTOR -	1	-
8	577902201	WASHER *s/n up to - 20133399999*	2	-
9	525762501	SCREW ITXSCM -	2	-
10	575270003	GASKET KIT *A=set of gaskets*	1	-
11	725537655	SCREW IHSCM *s/n up to - 20133399999*	2	-
1	580663714	SHORT BLOCK	1	-
1	505157501	AIR CONDUCTOR -	1	-
2	505159207	STARTER ASSY -	1	-
3	537232501	STARTER HANDLE -	1	-
4	505305125	STARTER ROPE -	1	-
5	576356601	SCREW ITXSCT -	1	-
6	537283201	SLEEVE -	1	-

Ref.	Article N.	Description	Qty	Kit
7	505158101	STARTER PULLEY ASSY -	1	-
8	525887401	SCREW CITXPANT -	2	-
9	598750301	SPRING CASSETTE ASSY -	1	-
10	525824501	SCREW CITXPANMO -	4	-
11	505159102	STARTER HOUSING -	1	-
12	523035606	LABEL *XPG*	1	-
12	523035605	LABEL *XP*	1	-
1	522675001	AIR FILTER ASSY *Nylon Mesh - 80 Micron Rating - Black - s/n up to - 20202600072*	1	-
1	522675002	AIR FILTER ASSY *Nylon Mesh - 44 Micron Rating - Yellow - s/n up to - 20202600072*	1	-
1	522675003	AIR FILTER ASSY *Non-Woven - White - s/n up to - 20202600072*	1	-
1	522675004	AIR FILTER ASSY *Nylon Mesh - 25 Micron Rating - Orange - s/n up to - 20202600072*	1	-
1	590458801	AIR FILTER *Nylon Mesh - 64 Micron Rating - Black - s/n from 20202600073 -*	1	-
1	590458802	AIR FILTER *Nylon Mesh - 25 Micron Rating - Yellow - s/n from 20202600073 -*	1	-
1	590458803	AIR FILTER ASSY *Non-Woven - Clear - s/n from 20202600073 -*	1	-
2	525397906	FILTER HOLDER ASSY *XPG s/n up to - 20202600072*	1	-
2	525397905	FILTER HOLDER ASSY *XP s/n up to - 20202600072*	1	-
2	597275501	FILTER HOLDER ASSY *XP s/n from 20202600073 -*	1	-
2	597275502	FILTER HOLDER ASSY *XPG s/n from 20202600073 -*	1	-
3	505176901	SHACKLE *s/n up to - 20202600072*	1	-
4	510017202	CHOKE CONTROL ASSY	1	-
5	505156201	SCREW	1	-
6	525588101	SEALING	1	-
7	503936601	PURGE	1	-

Ref.	Article N.	Description	Qty	Kit
8	574353503	SCREW ITXSCM	2	-
9	525344303	FUEL HOSE *XP s/n from 20173800688*	1	-
9	589357101	VENTILATING HOSE *s/n up to - 20154799999*	1	-
9	587645404	VENTILATING HOSE *s/n from 20154800001*	1	-
10	579194101	CARBURETTOR *s/n up to - 20121401172 (ZAMA EL44)*	1	-
10	501463307	CARBURETTOR KIT *s/n from 2012401173*	1	-
11	526818101	SCREW ITXSCM	4	-
12	505165202	FLANGE	1	-
13	503226503	SQUARE NUT	2	-
14	583964103	INLET PIPE	1	-
14	583964104	INLET PIPE *Cold resistant*	1	-
15	520290901	INTERMEDIATE WALL	1	-
16	525619201	SEALING	1	-
17	525619001	SEALING	1	-
18	523056801	FUEL HOSE	1	-
20	577536401	WIRING ASSY *s/n from 20121401173 -*	1	-
21	582025101	SUPPORT SLEEVE	1	-
22	598934501	FILTER UNIT *XP*	1	-
22	598934502	FILTER UNIT *XPG*	1	-
23	731231401	HEXAGON NUT *s/n from 20202600073 -*	1	-

CHAIN BRAKE AND CLUTCH COVER

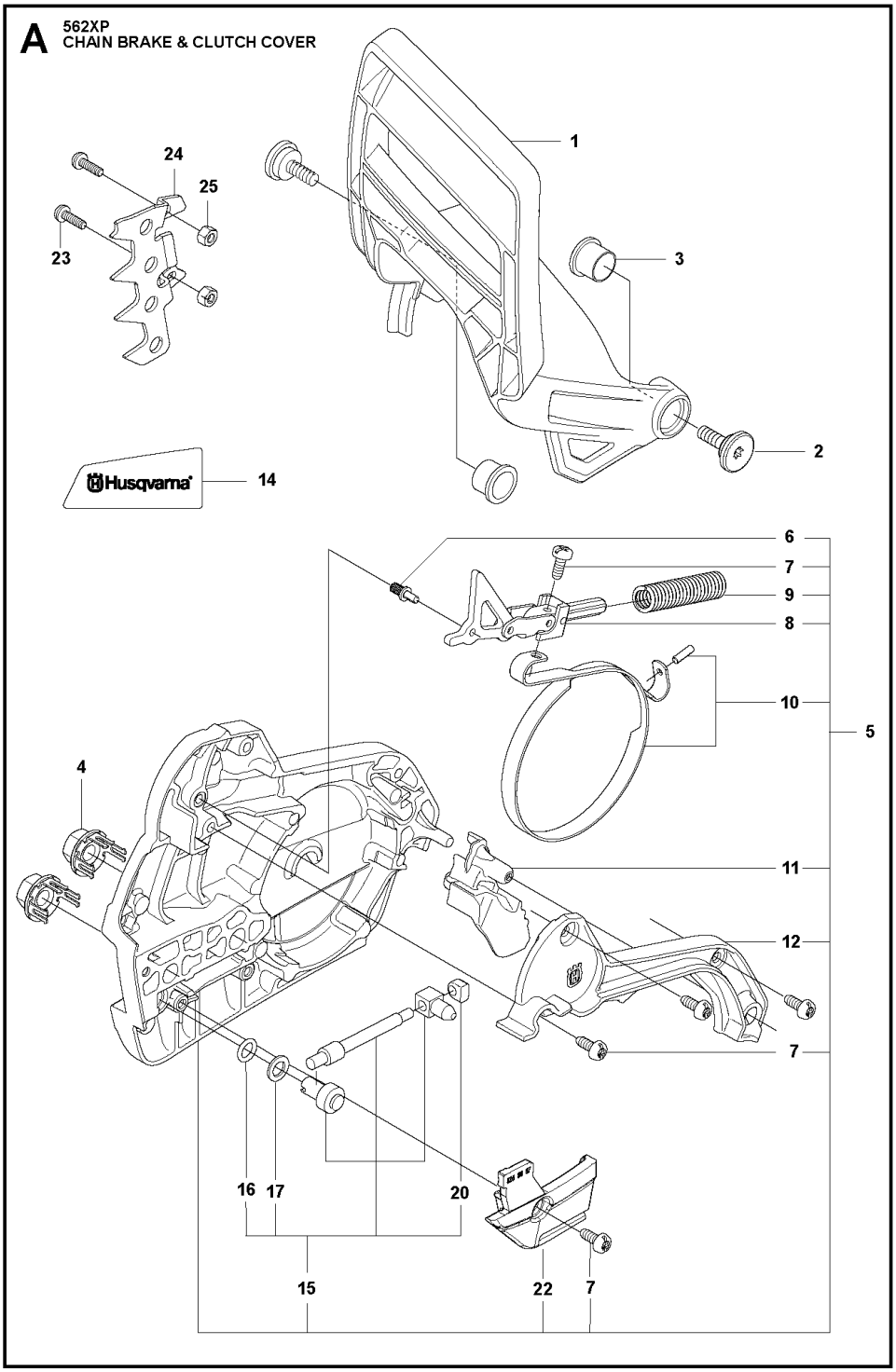

Ref.	Article N.	Description	Qty	Kit
1	575439201	TOOL -	1	-
2	522521101	COMBINATION WRENCH -	1	-
3	503558601	SPANNER -	1	-

Ref.	Article N.	Description	Qty	Kit
4	503558602	SPANNER -	1	-
5	503621201	GREASE -	1	-
6	501911401	GREASE GUN -	1	-
7	583897101	DIAGNOSTIC TOOL KIT -	1	-
8	576183401	CABLE ASSY *Diagnostics cable 14 Mhz*	1	-
9	522986502	WINTER KIT -	1	-
10	505166101	WINTER COVER -	1	-
11	503405901	WINTER PLUG -	1	-
12	503217016	SCREW CCRPANT -	2	-
13	740420100	O-RING -	2	-
14	578125501	WINTER PLUG -	1	-
15	576952201	CABLE ASSY *Diagnostics cable 8 MHz*	1	-
16	503267201	GLUE -	1	-
17	575880701	WRENCH -	1	-
1	579194101	CARBURETTOR *s/n up to - 20121401172 (ZAMA EL44)*	1	-
1	501463307	CARBURETTOR KIT	1	-
4	522517401	DIAPHRAGM	1	-
5	522517501	GASKET	1	-
6	503479701	VALVE	1	-
7	503665901	LEVER	1	-
8	537383401	SPRING	1	-
12	576414201	MAIN NOZZLE	1	-
17	503481801	SCREW	3	-
21	522517801	THROTTLE LEVER	1	-
26	503535701	STRAINER	1	-
27	537383101	DIAPHRAGM PUMP	1	-
28	537403301	DIAPHRAGM	1	-

Ref.	Article N.	Description	Qty	Kit
29	537020101	GASKET	1	-
32	503479001	SCREW	1	-
46	537177001	VALVE	1	-
50	522518901	GASKET KIT *B=set of gaskets*	1	-
51	582025101	SUPPORT SLEEVE	1	-
1	525250602	HAND GUARD -	1	-
2	526834501	SCREW -	2	-
3	577780201	BUSHING -	2	-
4	505197301	NUT -	2	-
5	525743305	CLUTCH COVER ASSY -	1	-
6	503751801	PIN -	1	-
7	526221801	SCREW CITXPANT -	5	-
8	505199301	KNEE JOINT ASSY -	1	-
9	503908301	BRAKE SPRING -	1	-
10	505199502	BRAKE BAND ASSY -	1	-
11	505201601	GUARD -	1	-
12	505199703	COVER -	1	-
14	523058001	LABEL *- up to s/n 20202399999*	1	-
15	575260402	CHAIN TENSIONER KIT -	1	-
16	740480702	O-RING -	1	-
17	503230063	WASHER -	1	-
20	537017401	BEARING SLEEVE -	1	-
22	525388701	CHAIN GUIDE -	1	-

Ref.	Article N.	Description	Qty	Kit
23	575793501	SCREW ITXPANM -	2	-
24	577975201	SPIKE OUTER -	1	-
25	503222401	LOCK NUT -	2	-
1	589809002	CLUTCH ASSY -	1	-
2	580653502	CLUTCH SPRING *s/n from 20133400001 - up to s/n 20164100192*	3	-
2	502164701	CLUTCH SPRING *s/n from 20164100193 -*	1	-
3	575261006	CLUTCH DRUM *- up to s/n 20202200048 3/8 x7*	1	-
3	575261005	CLUTCH DRUM ASSY *- up to s/n 20202200048 .325 x7*	1	-
3	575261010	CLUTCH DRUM ASSY -	1	-
4	501457402	RIM SPROCKET -	1	-
4	501598002	RIM SPROCKET *3/8x7*	1	-
5	503253401	NEEDLE BEARING -	1	-
6	577601101	WORM WHEEL *- up to s/n 20202200048*	1	-
6	586204601	WORM WHEEL *s/n from 20202200049 - 3/8*	1	-
7	505199909	OIL PUMP ASSY -	1	-
8	505200203	PUMP PISTON -	1	-
9	505200301	CASING -	1	-
10	503230060	WASHER -	2	-
11	503891601	SPRING -	1	-
12	505157001	ADJUSTMENT SCREW -	1	-
14	526818102	SCREW ITXSCM -	2	-
15	575847801	OIL HOSE	1	-

Ref.	Article N.	Description	Qty	Kit
		-		
16	504710003	OIL PLUMMET -	1	-
17	720123300	PARALLEL PIN -	2	-
18	503891501	SPRING -	1	-
19	505200101	PUMP CYLINDER -	1	-
20	503624903	SEALING PLUG -	1	-
21	598937706	CLUTCH DRUM ASSY -	1	-
1	588193901	CARBURETTOR AREA BASE	1	-
2	525755202	SCREW ITXSCFM	4	-
3	503869301	SUPPORT	2	-
4	581559201	BELLOWS	1	-
5	575380226	CRANKCASE ASSY	1	-
6	522742901	CHAIN GUIDE PLATE	1	-
7	575793501	SCREW ITXPANM	2	-
8	537403501	FILTER	1	-
9	530026119	CHECK VALVE	1	-
10	537210701	SPRING GUIDE	1	-
11	503436501	POSITION SPRING	1	-
12	505201201	CATCH	1	-
13	503751801	PIN	1	-
14	593806001	GUIDE BUSHING	2	-
15	522893801	BAR BOLT	2	-
16	525824401	SCREW ITXSCM	2	-
17	575841104	SCREW ITXSCM	6	-
18	537088301	GROMMET	1	-
19	577935201	SPIKE	1	-
20	522893901	CHAIN CATCHER	1	-
21	525798103	SCREW ITXSCFT	1	-
22	505125801	DEFLECTION LIMITER	1	-
23	595303003	SNAP LOCKING	1	-
24	588065501	AIR NOZZLE	1	-
25	526818101	SCREW ITXSCM	1	-
26	522620003	TANK CAP ASSY	1	-
27	589241101	GASKET	1	-

Ref.	Article N.	Description	Qty	Kit
28	503578901	HOLDER	1	-
29	525391201	RADIAL SEAL *- up to s/n 20202399999*	2	-
30	525887401	SCREW CITXPANT	1	-
31	575270003	GASKET KIT *A=set of gaskets*	1	-
32	525347601	BUMPER	1	-
33	577386801	CHAIN GUIDE	1	-
34	525887401	SCREW CITXPANT	1	-
35	526221801	SCREW CITXPANT	1	-
36	596911301	PROTECTIVE CAP *-up to s/n 20230403564*	1	-
1	575545215	CRANKSHAFT ASSY *- up to s/n 20202399999*	1	-
2	505133505	BALL BEARING	1	-
3	505133601	CUP	2	-
4	503256302	NEEDLE BEARING	1	-
5	525434204	BALL BEARING	2	-
6	525391201	RADIAL SEAL *- up to s/n 20202399999*	1	-
7	505416101	RADIAL SEAL	1	-
8	575545222	CRANKSHAFT ASSY *s/n from 20202400001 -*	1	-
1	587248702	CYLINDER COVER ASSY -	1	-
2	587149501	LABEL -	1	-
1	574519601	SPARK PLUG	1	-
2	582392701	SCREW	4	-
3	575276901	DECOMPRESSION VALVE	1	-
4	503552201	PLUG	1	-
5	576717602	SLEEVE	4	-
6	510164901	GASKET	1	-
7	575355805	CYLINDER ASSY *up to s/n - 201399999*	1	-
8	584807806	PISTON ASSY *up to s/n - 201399999*	1	-
9	505215701	PISTON RING *up to s/n - 20222500120*	1	-
10	737441000	SNAP RING	2	-
11	503256302	NEEDLE BEARING	1	-

Ref.	Article N.	Description	Qty	Kit
12	575270003	GASKET KIT *A=set of gaskets*	1	-
13	520291101	BUSHING	1	-
14	575355807	CYLINDER ASSY *s/n from 20141400001 -*	1	-
15	529504701	PISTON ASSY *s/n from 20141400001 -*	1	-
16	599998401	PISTON RING *s/n from 20222500121 -*	1	-
1	525887402	SCREW CITXPANT	1	-
2	504106301	HANDLE INSERT	1	-
4	575382205	FUEL TANK ASSY	1	-
5	501152901	TANK VENT ASSY	1	-
6	544099801	THROTTLE LOCKOUT	1	-
7	544099901	SPRING	1	-
8	505157701	THROTTLE	1	-
9	720182520	PARALLEL PIN	1	-
10	521887901	THROTTLE CABLE ASSY	1	-
11	525798102	SCREW ITXSCFT	1	-
12	573993503	FUEL HOSE	1	-
13	503443203	FUEL FILTER *18-40 µm (Blue)*	1	-
14	505165901	COVER *not XPW*	1	-
15	586312103	ANTIVIBRATION ELEMENT	1	-
16	505128702	ANTIVIBRATION ELEMENT	1	-
17	523085501	DEFLECTION LIMITER	1	-
18	501007601	SUPPORT	1	-
19	522620003	TANK CAP ASSY	1	-
20	589241101	GASKET	1	-
21	503578901	HOLDER	1	-
22	525798103	SCREW ITXSCFT	1	-
23	577844301	DECAL	1	-
24	529578202	FUEL HOSE ASSY *From s/n 20161000481- with magnet*	1	-
1	586146304	HANDLE SYSTEM -	1	-
2	525798103	SCREW ITXSCFT -	3	-
3	510097801	CONTACT PLATE -	1	-

Ref.	Article N.	Description	Qty	Kit
4	537252501	CONTACT PLATE -	1	-
5	525887401	SCREW CITXPANT -	1	-
6	505157403	COVER -	1	-
7	525798101	SCREW ITXSCFT -	2	-
8	505129705	ANTIVIBRATION ELEMENT -	1	-
9	505156904	FRONT HANDLE ASSY *incl. 5743863-01*	1	-
11	537088301	GROMMET -	1	-
12	576873004	SPIKE -	1	-
13	575793501	SCREW ITXPANM -	2	-
14	503222401	LOCK NUT -	2	-
15	577976301	SPIKE OUTER -	1	-
16	577976101	SPIKE -	1	-
17	525755103	SCREW ITXSCFM -	1	-
18	537024401	WEAR PROTECTION -	1	-
19	537089201	CHAIN CATCHER -	1	-
20	503222401	LOCK NUT -	1	-
1	576945104	SCREW KIT *Only screws*	1	-
2	525798103	SCREW ITXSCFT -	3	-
3	525798101	SCREW ITXSCFT -	1	-
4	505129705	ANTIVIBRATION ELEMENT -	1	-
5	505156903	FRONT HANDLE ASSY *incl. 5743863-01*	1	-
6	576873004	SPIKE	1	-

Ref.	Article N.	Description	Qty	Kit
		-		
7	575793501	SCREW ITXPANM -	2	-
8	503222401	LOCK NUT -	2	-
9	577976301	SPIKE OUTER *Spike Wrap*	1	-
10	577976101	SPIKE *Spike Wrap*	1	-
11	525755103	SCREW ITXSCFM -	1	-
12	537024401	WEAR PROTECTION -	1	-
13	537089201	CHAIN CATCHER -	1	-
14	503222401	LOCK NUT -	1	-
15	588966401	HANDLE -	1	-
1	575388905	FRONT HANDLE	1	-
2	525798103	SCREW ITXSCFT	2	-
3	525798101	SCREW ITXSCFT	3	-
4	505129705	ANTIVIBRATION ELEMENT	1	-
1	522741901	HANDLE INSERT -	1	-
2	578864601	THERMOSTAT ASSY -	1	-
3	537210801	RETAINER -	1	-
4	522611401	GENERATOR STATOR -	1	-
5	526818102	SCREW ITXSCM -	2	-
6	588168602	FOIL ELEMENT -	1	-
7	575388904	FRONT HANDLE -	1	-
8	525798103	SCREW ITXSCFT -	2	-
9	505157403	COVER -	1	-

Ref.	Article N.	Description	Qty	Kit
10	537252501	CONTACT PLATE -	1	-
11	510097801	CONTACT PLATE -	1	-
12	525887402	SCREW CITXPANT -	1	-
13	504872404	FLYWHEEL ASSY -	1	-
14	503220401	NUT -	1	-
15	503230042	WASHER -	2	-
16	501673501	SPRING -	2	-
17	501673201	PAWL -	2	-
18	506006901	SCREW -	2	-
19	505129705	ANTIVIBRATION ELEMENT -	1	-
20	525798101	SCREW ITXSCFT -	3	-
21	537088301	GROMMET -	1	-
22	582829601	THERMOSTAT ASSY *s/n up to 20164199999*	1	-
1	522795106	IGNITION MODULE ASSY *s/n up to - 20121401172 (14MHz)*	1	-
1	587306701	IGNITION MODULE *s/n from 20121401173 - (8MHz)*	1	-
2	501485404	SPARK PLUG CAP ASSY	1	-
3	525755203	SCREW ITXSCFM	2	-
4	575430601	WIRING ASSY *s/n up to - 20121401172 (14MHz)*	1	-
4	577967601	WIRING ASSY *s/n from 20121401173 - (8MHz)*	1	-
5	505178201	CABLE HOLDER	1	-
6	585321801	NUT	1	-
7	504872403	FLYWHEEL ASSY *XP*	1	-
7	504872404	FLYWHEEL ASSY *XPG*	1	-

Ref.	Article N.	Description	Qty	Kit
8	503230042	WASHER	2	-
9	501673501	SPRING	2	-
10	501673201	PAWL	2	-
11	506006901	SCREW	2	-
12	504043505	CABLE COVER	1	-
13	503238501	SHRINKAGE HOSE	2	-
14	525887401	SCREW CITXPANT	1	-
1	581914802	MUFFLER KIT -	1	-
2	724128759	SCREW CRPANM -	1	-
3	505171301	SPARK ARRESTER -	1	-
4	525825106	SCREW ITXSCM *s/n from 20133400001 -*	2	-
5	577656301	SLEEVE *s/n up to - 20133399999*	2	-
6	581918501	GASKET -	1	-
7	585178701	HEAT DEFLECTOR -	1	-
8	577902201	WASHER *s/n up to - 20133399999*	2	-
9	525762501	SCREW ITXSCM -	2	-
10	575270003	GASKET KIT *A=set of gaskets*	1	-
11	725537655	SCREW IHSCM *s/n up to - 20133399999*	2	-
1	580663714	SHORT BLOCK	1	-
1	505157501	AIR CONDUCTOR -	1	-
2	505159207	STARTER ASSY -	1	-
3	537232501	STARTER HANDLE -	1	-
4	505305125	STARTER ROPE -	1	-
5	576356601	SCREW ITXSCT -	1	-
6	537283201	SLEEVE -	1	-

Ref.	Article N.	Description	Qty	Kit
7	505158101	STARTER PULLEY ASSY -	1	-
8	525887401	SCREW CITXPANT -	2	-
9	598750301	SPRING CASSETTE ASSY -	1	-
10	525824501	SCREW CITXPANMO -	4	-
11	505159102	STARTER HOUSING -	1	-
12	523035606	LABEL *XPG*	1	-
12	523035605	LABEL *XP*	1	-
1	522675001	AIR FILTER ASSY *Nylon Mesh - 80 Micron Rating - Black - s/n up to - 20202600072*	1	-
1	522675002	AIR FILTER ASSY *Nylon Mesh - 44 Micron Rating - Yellow - s/n up to - 20202600072*	1	-
1	522675003	AIR FILTER ASSY *Non-Woven - White - s/n up to - 20202600072*	1	-
1	522675004	AIR FILTER ASSY *Nylon Mesh - 25 Micron Rating - Orange - s/n up to - 20202600072*	1	-
1	590458801	AIR FILTER *Nylon Mesh - 64 Micron Rating - Black - s/n from 20202600073 -*	1	-
1	590458802	AIR FILTER *Nylon Mesh - 25 Micron Rating - Yellow - s/n from 20202600073 -*	1	-
1	590458803	AIR FILTER ASSY *Non-Woven - Clear - s/n from 20202600073 -*	1	-
2	525397906	FILTER HOLDER ASSY *XPG s/n up to - 20202600072*	1	-
2	525397905	FILTER HOLDER ASSY *XP s/n up to - 20202600072*	1	-
2	597275501	FILTER HOLDER ASSY *XP s/n from 20202600073 -*	1	-
2	597275502	FILTER HOLDER ASSY *XPG s/n from 20202600073 -*	1	-
3	505176901	SHACKLE *s/n up to - 20202600072*	1	-
4	510017202	CHOKE CONTROL ASSY	1	-
5	505156201	SCREW	1	-
6	525588101	SEALING	1	-
7	503936601	PURGE	1	-

Ref.	Article N.	Description	Qty	Kit
8	574353503	SCREW ITXSCM	2	-
9	525344303	FUEL HOSE *XP s/n from 20173800688*	1	-
9	589357101	VENTILATING HOSE *s/n up to - 20154799999*	1	-
9	587645404	VENTILATING HOSE *s/n from 20154800001*	1	-
10	579194101	CARBURETTOR *s/n up to - 20121401172 (ZAMA EL44)*	1	-
10	501463307	CARBURETTOR KIT *s/n from 2012401173*	1	-
11	526818101	SCREW ITXSCM	4	-
12	505165202	FLANGE	1	-
13	503226503	SQUARE NUT	2	-
14	583964103	INLET PIPE	1	-
14	583964104	INLET PIPE *Cold resistant*	1	-
15	520290901	INTERMEDIATE WALL	1	-
16	525619201	SEALING	1	-
17	525619001	SEALING	1	-
18	523056801	FUEL HOSE	1	-
20	577536401	WIRING ASSY *s/n from 20121401173 -*	1	-
21	582025101	SUPPORT SLEEVE	1	-
22	598934501	FILTER UNIT *XP*	1	-
22	598934502	FILTER UNIT *XPG*	1	-
23	731231401	HEXAGON NUT *s/n from 20202600073 -*	1	-

CLUTCH AND OIL PUMP

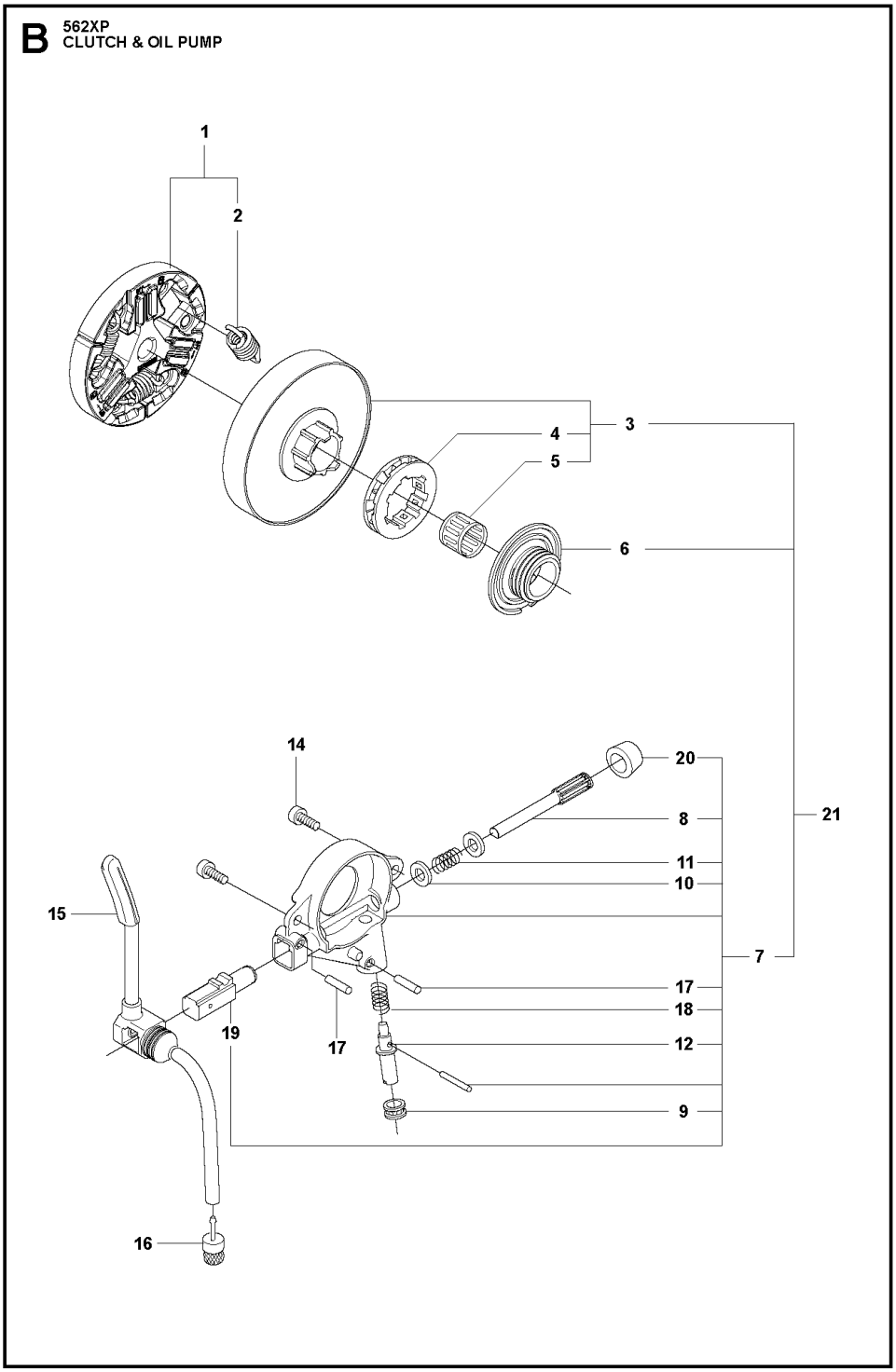

Ref.	Article N.	Description	Qty	Kit
1	575439201	TOOL -	1	-
2	522521101	COMBINATION WRENCH -	1	-
3	503558601	SPANNER -	1	-

Ref.	Article N.	Description	Qty	Kit
4	503558602	SPANNER -	1	-
5	503621201	GREASE -	1	-
6	501911401	GREASE GUN -	1	-
7	583897101	DIAGNOSTIC TOOL KIT -	1	-
8	576183401	CABLE ASSY *Diagnostics cable 14 Mhz*	1	-
9	522986502	WINTER KIT -	1	-
10	505166101	WINTER COVER -	1	-
11	503405901	WINTER PLUG -	1	-
12	503217016	SCREW CCRPANT -	2	-
13	740420100	O-RING -	2	-
14	578125501	WINTER PLUG -	1	-
15	576952201	CABLE ASSY *Diagnostics cable 8 MHz*	1	-
16	503267201	GLUE -	1	-
17	575880701	WRENCH -	1	-
1	579194101	CARBURETTOR *s/n up to - 20121401172 (ZAMA EL44)*	1	-
1	501463307	CARBURETTOR KIT	1	-
4	522517401	DIAPHRAGM	1	-
5	522517501	GASKET	1	-
6	503479701	VALVE	1	-
7	503665901	LEVER	1	-
8	537383401	SPRING	1	-
12	576414201	MAIN NOZZLE	1	-
17	503481801	SCREW	3	-
21	522517801	THROTTLE LEVER	1	-
26	503535701	STRAINER	1	-
27	537383101	DIAPHRAGM PUMP	1	-
28	537403301	DIAPHRAGM	1	-

Ref.	Article N.	Description	Qty	Kit
29	537020101	GASKET	1	-
32	503479001	SCREW	1	-
46	537177001	VALVE	1	-
50	522518901	GASKET KIT *B=set of gaskets*	1	-
51	582025101	SUPPORT SLEEVE	1	-
1	525250602	HAND GUARD -	1	-
2	526834501	SCREW -	2	-
3	577780201	BUSHING -	2	-
4	505197301	NUT -	2	-
5	525743305	CLUTCH COVER ASSY -	1	-
6	503751801	PIN -	1	-
7	526221801	SCREW CITXPANT -	5	-
8	505199301	KNEE JOINT ASSY -	1	-
9	503908301	BRAKE SPRING -	1	-
10	505199502	BRAKE BAND ASSY -	1	-
11	505201601	GUARD -	1	-
12	505199703	COVER -	1	-
14	523058001	LABEL *- up to s/n 20202399999*	1	-
15	575260402	CHAIN TENSIONER KIT -	1	-
16	740480702	O-RING -	1	-
17	503230063	WASHER -	1	-
20	537017401	BEARING SLEEVE -	1	-
22	525388701	CHAIN GUIDE -	1	-

Ref.	Article N.	Description	Qty	Kit
23	575793501	SCREW ITXPANM -	2	-
24	577975201	SPIKE OUTER -	1	-
25	503222401	LOCK NUT -	2	-
1	589809002	CLUTCH ASSY -	1	-
2	580653502	CLUTCH SPRING *s/n from 20133400001 - up to s/n 20164100192*	3	-
2	502164701	CLUTCH SPRING *s/n from 20164100193 -*	1	-
3	575261006	CLUTCH DRUM *- up to s/n 20202200048 3/8 x7*	1	-
3	575261005	CLUTCH DRUM ASSY *- up to s/n 20202200048 .325 x7*	1	-
3	575261010	CLUTCH DRUM ASSY -	1	-
4	501457402	RIM SPROCKET -	1	-
4	501598002	RIM SPROCKET *3/8x7*	1	-
5	503253401	NEEDLE BEARING -	1	-
6	577601101	WORM WHEEL *- up to s/n 20202200048*	1	-
6	586204601	WORM WHEEL *s/n from 20202200049 - 3/8*	1	-
7	505199909	OIL PUMP ASSY -	1	-
8	505200203	PUMP PISTON -	1	-
9	505200301	CASING -	1	-
10	503230060	WASHER -	2	-
11	503891601	SPRING -	1	-
12	505157001	ADJUSTMENT SCREW -	1	-
14	526818102	SCREW ITXSCM -	2	-
15	575847801	OIL HOSE	1	-

Ref.	Article N.	Description	Qty	Kit
		-		
16	504710003	OIL PLUMMET -	1	-
17	720123300	PARALLEL PIN -	2	-
18	503891501	SPRING -	1	-
19	505200101	PUMP CYLINDER -	1	-
20	503624903	SEALING PLUG -	1	-
21	598937706	CLUTCH DRUM ASSY -	1	-
1	588193901	CARBURETTOR AREA BASE	1	-
2	525755202	SCREW ITXSCFM	4	-
3	503869301	SUPPORT	2	-
4	581559201	BELLOWS	1	-
5	575380226	CRANKCASE ASSY	1	-
6	522742901	CHAIN GUIDE PLATE	1	-
7	575793501	SCREW ITXPANM	2	-
8	537403501	FILTER	1	-
9	530026119	CHECK VALVE	1	-
10	537210701	SPRING GUIDE	1	-
11	503436501	POSITION SPRING	1	-
12	505201201	CATCH	1	-
13	503751801	PIN	1	-
14	593806001	GUIDE BUSHING	2	-
15	522893801	BAR BOLT	2	-
16	525824401	SCREW ITXSCM	2	-
17	575841104	SCREW ITXSCM	6	-
18	537088301	GROMMET	1	-
19	577935201	SPIKE	1	-
20	522893901	CHAIN CATCHER	1	-
21	525798103	SCREW ITXSCFT	1	-
22	505125801	DEFLECTION LIMITER	1	-
23	595303003	SNAP LOCKING	1	-
24	588065501	AIR NOZZLE	1	-
25	526818101	SCREW ITXSCM	1	-
26	522620003	TANK CAP ASSY	1	-
27	589241101	GASKET	1	-

Ref.	Article N.	Description	Qty	Kit
28	503578901	HOLDER	1	-
29	525391201	RADIAL SEAL *- up to s/n 20202399999*	2	-
30	525887401	SCREW CITXPANT	1	-
31	575270003	GASKET KIT *A=set of gaskets*	1	-
32	525347601	BUMPER	1	-
33	577386801	CHAIN GUIDE	1	-
34	525887401	SCREW CITXPANT	1	-
35	526221801	SCREW CITXPANT	1	-
36	596911301	PROTECTIVE CAP *-up to s/n 20230403564*	1	-
1	575545215	CRANKSHAFT ASSY *- up to s/n 20202399999*	1	-
2	505133505	BALL BEARING	1	-
3	505133601	CUP	2	-
4	503256302	NEEDLE BEARING	1	-
5	525434204	BALL BEARING	2	-
6	525391201	RADIAL SEAL *- up to s/n 20202399999*	1	-
7	505416101	RADIAL SEAL	1	-
8	575545222	CRANKSHAFT ASSY *s/n from 20202400001 -*	1	-
1	587248702	CYLINDER COVER ASSY -	1	-
2	587149501	LABEL -	1	-
1	574519601	SPARK PLUG	1	-
2	582392701	SCREW	4	-
3	575276901	DECOMPRESSION VALVE	1	-
4	503552201	PLUG	1	-
5	576717602	SLEEVE	4	-
6	510164901	GASKET	1	-
7	575355805	CYLINDER ASSY *up to s/n - 201399999*	1	-
8	584807806	PISTON ASSY *up to s/n - 201399999*	1	-
9	505215701	PISTON RING *up to s/n - 20222500120*	1	-
10	737441000	SNAP RING	2	-
11	503256302	NEEDLE BEARING	1	-

Ref.	Article N.	Description	Qty	Kit
12	575270003	GASKET KIT *A=set of gaskets*	1	-
13	520291101	BUSHING	1	-
14	575355807	CYLINDER ASSY *s/n from 20141400001 -*	1	-
15	529504701	PISTON ASSY *s/n from 20141400001 -*	1	-
16	599998401	PISTON RING *s/n from 20222500121 -*	1	-
1	525887402	SCREW CITXPANT	1	-
2	504106301	HANDLE INSERT	1	-
4	575382205	FUEL TANK ASSY	1	-
5	501152901	TANK VENT ASSY	1	-
6	544099801	THROTTLE LOCKOUT	1	-
7	544099901	SPRING	1	-
8	505157701	THROTTLE	1	-
9	720182520	PARALLEL PIN	1	-
10	521887901	THROTTLE CABLE ASSY	1	-
11	525798102	SCREW ITXSCFT	1	-
12	573993503	FUEL HOSE	1	-
13	503443203	FUEL FILTER *18-40 µm (Blue)*	1	-
14	505165901	COVER *not XPW*	1	-
15	586312103	ANTIVIBRATION ELEMENT	1	-
16	505128702	ANTIVIBRATION ELEMENT	1	-
17	523085501	DEFLECTION LIMITER	1	-
18	501007601	SUPPORT	1	-
19	522620003	TANK CAP ASSY	1	-
20	589241101	GASKET	1	-
21	503578901	HOLDER	1	-
22	525798103	SCREW ITXSCFT	1	-
23	577844301	DECAL	1	-
24	529578202	FUEL HOSE ASSY *From s/n 20161000481- with magnet*	1	-
1	586146304	HANDLE SYSTEM -	1	-
2	525798103	SCREW ITXSCFT -	3	-
3	510097801	CONTACT PLATE -	1	-

Ref.	Article N.	Description	Qty	Kit
4	537252501	CONTACT PLATE -	1	-
5	525887401	SCREW CITXPANT -	1	-
6	505157403	COVER -	1	-
7	525798101	SCREW ITXSCFT -	2	-
8	505129705	ANTIVIBRATION ELEMENT -	1	-
9	505156904	FRONT HANDLE ASSY *incl. 5743863-01*	1	-
11	537088301	GROMMET -	1	-
12	576873004	SPIKE -	1	-
13	575793501	SCREW ITXPANM -	2	-
14	503222401	LOCK NUT -	2	-
15	577976301	SPIKE OUTER -	1	-
16	577976101	SPIKE -	1	-
17	525755103	SCREW ITXSCFM -	1	-
18	537024401	WEAR PROTECTION -	1	-
19	537089201	CHAIN CATCHER -	1	-
20	503222401	LOCK NUT -	1	-
1	576945104	SCREW KIT *Only screws*	1	-
2	525798103	SCREW ITXSCFT -	3	-
3	525798101	SCREW ITXSCFT -	1	-
4	505129705	ANTIVIBRATION ELEMENT -	1	-
5	505156903	FRONT HANDLE ASSY *incl. 5743863-01*	1	-
6	576873004	SPIKE	1	-

Ref.	Article N.	Description	Qty	Kit
		-		
7	575793501	SCREW ITXPANM -	2	-
8	503222401	LOCK NUT -	2	-
9	577976301	SPIKE OUTER *Spike Wrap*	1	-
10	577976101	SPIKE *Spike Wrap*	1	-
11	525755103	SCREW ITXSCFM -	1	-
12	537024401	WEAR PROTECTION -	1	-
13	537089201	CHAIN CATCHER -	1	-
14	503222401	LOCK NUT -	1	-
15	588966401	HANDLE -	1	-
1	575388905	FRONT HANDLE	1	-
2	525798103	SCREW ITXSCFT	2	-
3	525798101	SCREW ITXSCFT	3	-
4	505129705	ANTIVIBRATION ELEMENT	1	-
1	522741901	HANDLE INSERT -	1	-
2	578864601	THERMOSTAT ASSY -	1	-
3	537210801	RETAINER -	1	-
4	522611401	GENERATOR STATOR -	1	-
5	526818102	SCREW ITXSCM -	2	-
6	588168602	FOIL ELEMENT -	1	-
7	575388904	FRONT HANDLE -	1	-
8	525798103	SCREW ITXSCFT -	2	-
9	505157403	COVER -	1	-

Ref.	Article N.	Description	Qty	Kit
10	537252501	CONTACT PLATE -	1	-
11	510097801	CONTACT PLATE -	1	-
12	525887402	SCREW CITXPANT -	1	-
13	504872404	FLYWHEEL ASSY -	1	-
14	503220401	NUT -	1	-
15	503230042	WASHER -	2	-
16	501673501	SPRING -	2	-
17	501673201	PAWL -	2	-
18	506006901	SCREW -	2	-
19	505129705	ANTIVIBRATION ELEMENT -	1	-
20	525798101	SCREW ITXSCFT -	3	-
21	537088301	GROMMET -	1	-
22	582829601	THERMOSTAT ASSY *s/n up to 20164199999*	1	-
1	522795106	IGNITION MODULE ASSY *s/n up to - 20121401172 (14MHz)*	1	-
1	587306701	IGNITION MODULE *s/n from 20121401173 - (8MHz)*	1	-
2	501485404	SPARK PLUG CAP ASSY	1	-
3	525755203	SCREW ITXSCFM	2	-
4	575430601	WIRING ASSY *s/n up to - 20121401172 (14MHz)*	1	-
4	577967601	WIRING ASSY *s/n from 20121401173 - (8MHz)*	1	-
5	505178201	CABLE HOLDER	1	-
6	585321801	NUT	1	-
7	504872403	FLYWHEEL ASSY *XP*	1	-
7	504872404	FLYWHEEL ASSY *XPG*	1	-

Ref.	Article N.	Description	Qty	Kit
8	503230042	WASHER	2	-
9	501673501	SPRING	2	-
10	501673201	PAWL	2	-
11	506006901	SCREW	2	-
12	504043505	CABLE COVER	1	-
13	503238501	SHRINKAGE HOSE	2	-
14	525887401	SCREW CITXPANT	1	-
1	581914802	MUFFLER KIT -	1	-
2	724128759	SCREW CRPANM -	1	-
3	505171301	SPARK ARRESTER -	1	-
4	525825106	SCREW ITXSCM *s/n from 20133400001 -*	2	-
5	577656301	SLEEVE *s/n up to - 20133399999*	2	-
6	581918501	GASKET -	1	-
7	585178701	HEAT DEFLECTOR -	1	-
8	577902201	WASHER *s/n up to - 20133399999*	2	-
9	525762501	SCREW ITXSCM -	2	-
10	575270003	GASKET KIT *A=set of gaskets*	1	-
11	725537655	SCREW IHSCM *s/n up to - 20133399999*	2	-
1	580663714	SHORT BLOCK	1	-
1	505157501	AIR CONDUCTOR -	1	-
2	505159207	STARTER ASSY -	1	-
3	537232501	STARTER HANDLE -	1	-
4	505305125	STARTER ROPE -	1	-
5	576356601	SCREW ITXSCT -	1	-
6	537283201	SLEEVE -	1	-

Ref.	Article N.	Description	Qty	Kit
7	505158101	STARTER PULLEY ASSY -	1	-
8	525887401	SCREW CITXPANT -	2	-
9	598750301	SPRING CASSETTE ASSY -	1	-
10	525824501	SCREW CITXPANMO -	4	-
11	505159102	STARTER HOUSING -	1	-
12	523035606	LABEL *XPG*	1	-
12	523035605	LABEL *XP*	1	-
1	522675001	AIR FILTER ASSY *Nylon Mesh - 80 Micron Rating - Black - s/n up to - 20202600072*	1	-
1	522675002	AIR FILTER ASSY *Nylon Mesh - 44 Micron Rating - Yellow - s/n up to - 20202600072*	1	-
1	522675003	AIR FILTER ASSY *Non-Woven - White - s/n up to - 20202600072*	1	-
1	522675004	AIR FILTER ASSY *Nylon Mesh - 25 Micron Rating - Orange - s/n up to - 20202600072*	1	-
1	590458801	AIR FILTER *Nylon Mesh - 64 Micron Rating - Black - s/n from 20202600073 -*	1	-
1	590458802	AIR FILTER *Nylon Mesh - 25 Micron Rating - Yellow - s/n from 20202600073 -*	1	-
1	590458803	AIR FILTER ASSY *Non-Woven - Clear - s/n from 20202600073 -*	1	-
2	525397906	FILTER HOLDER ASSY *XPG s/n up to - 20202600072*	1	-
2	525397905	FILTER HOLDER ASSY *XP s/n up to - 20202600072*	1	-
2	597275501	FILTER HOLDER ASSY *XP s/n from 20202600073 -*	1	-
2	597275502	FILTER HOLDER ASSY *XPG s/n from 20202600073 -*	1	-
3	505176901	SHACKLE *s/n up to - 20202600072*	1	-
4	510017202	CHOKE CONTROL ASSY	1	-
5	505156201	SCREW	1	-
6	525588101	SEALING	1	-
7	503936601	PURGE	1	-

Ref.	Article N.	Description	Qty	Kit
8	574353503	SCREW ITXSCM	2	-
9	525344303	FUEL HOSE *XP s/n from 20173800688*	1	-
9	589357101	VENTILATING HOSE *s/n up to - 20154799999*	1	-
9	587645404	VENTILATING HOSE *s/n from 20154800001*	1	-
10	579194101	CARBURETTOR *s/n up to - 20121401172 (ZAMA EL44)*	1	-
10	501463307	CARBURETTOR KIT *s/n from 2012401173*	1	-
11	526818101	SCREW ITXSCM	4	-
12	505165202	FLANGE	1	-
13	503226503	SQUARE NUT	2	-
14	583964103	INLET PIPE	1	-
14	583964104	INLET PIPE *Cold resistant*	1	-
15	520290901	INTERMEDIATE WALL	1	-
16	525619201	SEALING	1	-
17	525619001	SEALING	1	-
18	523056801	FUEL HOSE	1	-
20	577536401	WIRING ASSY *s/n from 20121401173 -*	1	-
21	582025101	SUPPORT SLEEVE	1	-
22	598934501	FILTER UNIT *XP*	1	-
22	598934502	FILTER UNIT *XPG*	1	-
23	731231401	HEXAGON NUT *s/n from 20202600073 -*	1	-

CRANKCASE

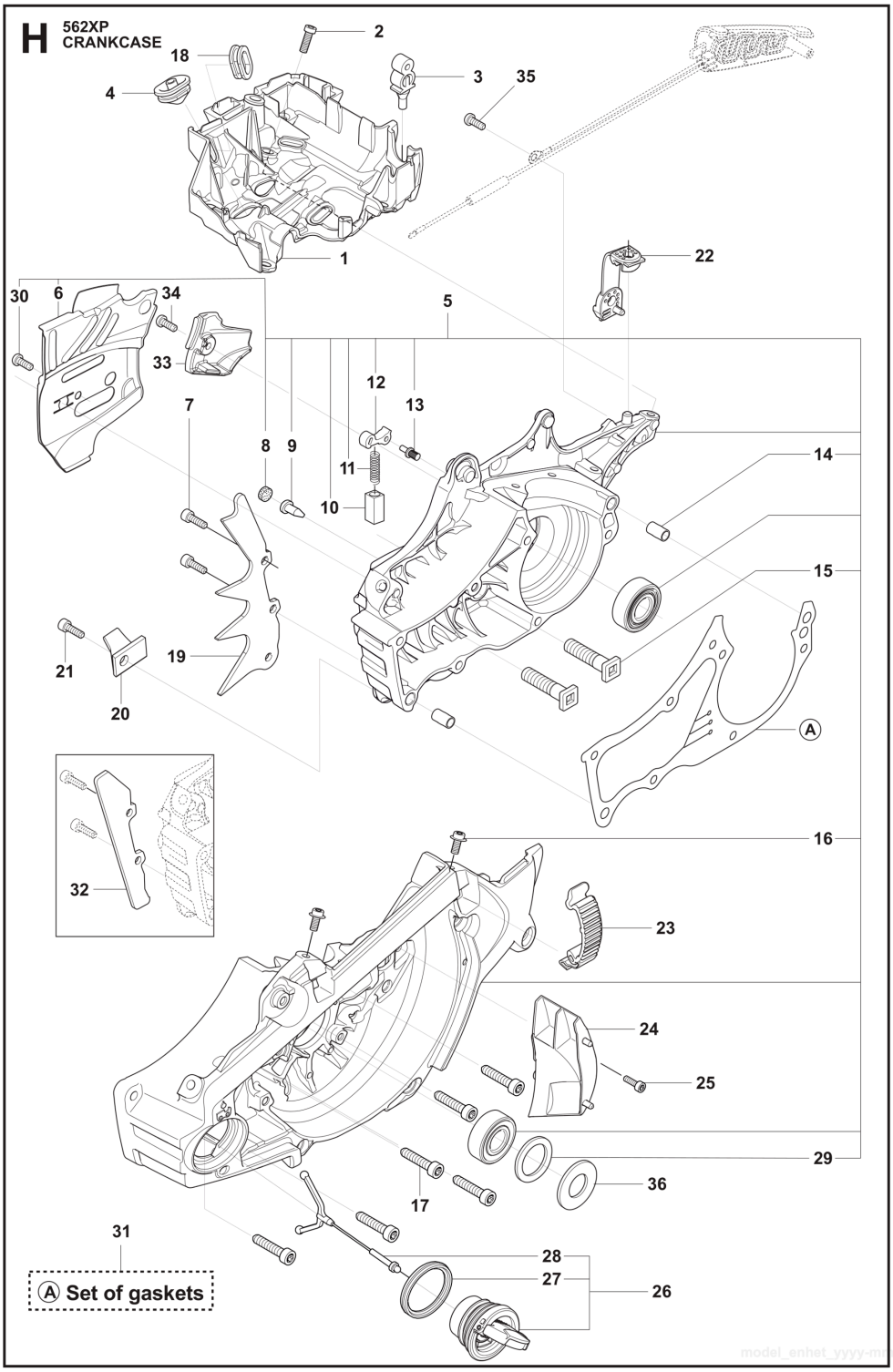

Ref.	Article N.	Description	Qty	Kit
1	575439201	TOOL -	1	-
2	522521101	COMBINATION WRENCH -	1	-
3	503558601	SPANNER -	1	-

Ref.	Article N.	Description	Qty	Kit
4	503558602	SPANNER -	1	-
5	503621201	GREASE -	1	-
6	501911401	GREASE GUN -	1	-
7	583897101	DIAGNOSTIC TOOL KIT -	1	-
8	576183401	CABLE ASSY *Diagnostics cable 14 Mhz*	1	-
9	522986502	WINTER KIT -	1	-
10	505166101	WINTER COVER -	1	-
11	503405901	WINTER PLUG -	1	-
12	503217016	SCREW CCRPANT -	2	-
13	740420100	O-RING -	2	-
14	578125501	WINTER PLUG -	1	-
15	576952201	CABLE ASSY *Diagnostics cable 8 MHz*	1	-
16	503267201	GLUE -	1	-
17	575880701	WRENCH -	1	-
1	579194101	CARBURETTOR *s/n up to - 20121401172 (ZAMA EL44)*	1	-
1	501463307	CARBURETTOR KIT	1	-
4	522517401	DIAPHRAGM	1	-
5	522517501	GASKET	1	-
6	503479701	VALVE	1	-
7	503665901	LEVER	1	-
8	537383401	SPRING	1	-
12	576414201	MAIN NOZZLE	1	-
17	503481801	SCREW	3	-
21	522517801	THROTTLE LEVER	1	-
26	503535701	STRAINER	1	-
27	537383101	DIAPHRAGM PUMP	1	-
28	537403301	DIAPHRAGM	1	-

Ref.	Article N.	Description	Qty	Kit
29	537020101	GASKET	1	-
32	503479001	SCREW	1	-
46	537177001	VALVE	1	-
50	522518901	GASKET KIT *B=set of gaskets*	1	-
51	582025101	SUPPORT SLEEVE	1	-
1	525250602	HAND GUARD -	1	-
2	526834501	SCREW -	2	-
3	577780201	BUSHING -	2	-
4	505197301	NUT -	2	-
5	525743305	CLUTCH COVER ASSY -	1	-
6	503751801	PIN -	1	-
7	526221801	SCREW CITXPANT -	5	-
8	505199301	KNEE JOINT ASSY -	1	-
9	503908301	BRAKE SPRING -	1	-
10	505199502	BRAKE BAND ASSY -	1	-
11	505201601	GUARD -	1	-
12	505199703	COVER -	1	-
14	523058001	LABEL *- up to s/n 20202399999*	1	-
15	575260402	CHAIN TENSIONER KIT -	1	-
16	740480702	O-RING -	1	-
17	503230063	WASHER -	1	-
20	537017401	BEARING SLEEVE -	1	-
22	525388701	CHAIN GUIDE -	1	-

Ref.	Article N.	Description	Qty	Kit
23	575793501	SCREW ITXPANM -	2	-
24	577975201	SPIKE OUTER -	1	-
25	503222401	LOCK NUT -	2	-
1	589809002	CLUTCH ASSY -	1	-
2	580653502	CLUTCH SPRING *s/n from 20133400001 - up to s/n 20164100192*	3	-
2	502164701	CLUTCH SPRING *s/n from 20164100193 -*	1	-
3	575261006	CLUTCH DRUM *- up to s/n 20202200048 3/8 x7*	1	-
3	575261005	CLUTCH DRUM ASSY *- up to s/n 20202200048 .325 x7*	1	-
3	575261010	CLUTCH DRUM ASSY -	1	-
4	501457402	RIM SPROCKET -	1	-
4	501598002	RIM SPROCKET *3/8x7*	1	-
5	503253401	NEEDLE BEARING -	1	-
6	577601101	WORM WHEEL *- up to s/n 20202200048*	1	-
6	586204601	WORM WHEEL *s/n from 20202200049 - 3/8*	1	-
7	505199909	OIL PUMP ASSY -	1	-
8	505200203	PUMP PISTON -	1	-
9	505200301	CASING -	1	-
10	503230060	WASHER -	2	-
11	503891601	SPRING -	1	-
12	505157001	ADJUSTMENT SCREW -	1	-
14	526818102	SCREW ITXSCM -	2	-
15	575847801	OIL HOSE	1	-

Ref.	Article N.	Description	Qty	Kit
		-		
16	504710003	OIL PLUMMET -	1	-
17	720123300	PARALLEL PIN -	2	-
18	503891501	SPRING -	1	-
19	505200101	PUMP CYLINDER -	1	-
20	503624903	SEALING PLUG -	1	-
21	598937706	CLUTCH DRUM ASSY -	1	-
1	588193901	CARBURETTOR AREA BASE	1	-
2	525755202	SCREW ITXSCFM	4	-
3	503869301	SUPPORT	2	-
4	581559201	BELLOWS	1	-
5	575380226	CRANKCASE ASSY	1	-
6	522742901	CHAIN GUIDE PLATE	1	-
7	575793501	SCREW ITXPANM	2	-
8	537403501	FILTER	1	-
9	530026119	CHECK VALVE	1	-
10	537210701	SPRING GUIDE	1	-
11	503436501	POSITION SPRING	1	-
12	505201201	CATCH	1	-
13	503751801	PIN	1	-
14	593806001	GUIDE BUSHING	2	-
15	522893801	BAR BOLT	2	-
16	525824401	SCREW ITXSCM	2	-
17	575841104	SCREW ITXSCM	6	-
18	537088301	GROMMET	1	-
19	577935201	SPIKE	1	-
20	522893901	CHAIN CATCHER	1	-
21	525798103	SCREW ITXSCFT	1	-
22	505125801	DEFLECTION LIMITER	1	-
23	595303003	SNAP LOCKING	1	-
24	588065501	AIR NOZZLE	1	-
25	526818101	SCREW ITXSCM	1	-
26	522620003	TANK CAP ASSY	1	-
27	589241101	GASKET	1	-

Ref.	Article N.	Description	Qty	Kit
28	503578901	HOLDER	1	-
29	525391201	RADIAL SEAL *- up to s/n 20202399999*	2	-
30	525887401	SCREW CITXPANT	1	-
31	575270003	GASKET KIT *A=set of gaskets*	1	-
32	525347601	BUMPER	1	-
33	577386801	CHAIN GUIDE	1	-
34	525887401	SCREW CITXPANT	1	-
35	526221801	SCREW CITXPANT	1	-
36	596911301	PROTECTIVE CAP *-up to s/n 20230403564*	1	-
1	575545215	CRANKSHAFT ASSY *- up to s/n 20202399999*	1	-
2	505133505	BALL BEARING	1	-
3	505133601	CUP	2	-
4	503256302	NEEDLE BEARING	1	-
5	525434204	BALL BEARING	2	-
6	525391201	RADIAL SEAL *- up to s/n 20202399999*	1	-
7	505416101	RADIAL SEAL	1	-
8	575545222	CRANKSHAFT ASSY *s/n from 20202400001 -*	1	-
1	587248702	CYLINDER COVER ASSY -	1	-
2	587149501	LABEL -	1	-
1	574519601	SPARK PLUG	1	-
2	582392701	SCREW	4	-
3	575276901	DECOMPRESSION VALVE	1	-
4	503552201	PLUG	1	-
5	576717602	SLEEVE	4	-
6	510164901	GASKET	1	-
7	575355805	CYLINDER ASSY *up to s/n - 201399999*	1	-
8	584807806	PISTON ASSY *up to s/n - 201399999*	1	-
9	505215701	PISTON RING *up to s/n - 20222500120*	1	-
10	737441000	SNAP RING	2	-
11	503256302	NEEDLE BEARING	1	-

Ref.	Article N.	Description	Qty	Kit
12	575270003	GASKET KIT *A=set of gaskets*	1	-
13	520291101	BUSHING	1	-
14	575355807	CYLINDER ASSY *s/n from 20141400001 -*	1	-
15	529504701	PISTON ASSY *s/n from 20141400001 -*	1	-
16	599998401	PISTON RING *s/n from 20222500121 -*	1	-
1	525887402	SCREW CITXPANT	1	-
2	504106301	HANDLE INSERT	1	-
4	575382205	FUEL TANK ASSY	1	-
5	501152901	TANK VENT ASSY	1	-
6	544099801	THROTTLE LOCKOUT	1	-
7	544099901	SPRING	1	-
8	505157701	THROTTLE	1	-
9	720182520	PARALLEL PIN	1	-
10	521887901	THROTTLE CABLE ASSY	1	-
11	525798102	SCREW ITXSCFT	1	-
12	573993503	FUEL HOSE	1	-
13	503443203	FUEL FILTER *18-40 µm (Blue)*	1	-
14	505165901	COVER *not XPW*	1	-
15	586312103	ANTIVIBRATION ELEMENT	1	-
16	505128702	ANTIVIBRATION ELEMENT	1	-
17	523085501	DEFLECTION LIMITER	1	-
18	501007601	SUPPORT	1	-
19	522620003	TANK CAP ASSY	1	-
20	589241101	GASKET	1	-
21	503578901	HOLDER	1	-
22	525798103	SCREW ITXSCFT	1	-
23	577844301	DECAL	1	-
24	529578202	FUEL HOSE ASSY *From s/n 20161000481- with magnet*	1	-
1	586146304	HANDLE SYSTEM -	1	-
2	525798103	SCREW ITXSCFT -	3	-
3	510097801	CONTACT PLATE -	1	-

Ref.	Article N.	Description	Qty	Kit
4	537252501	CONTACT PLATE -	1	-
5	525887401	SCREW CITXPANT -	1	-
6	505157403	COVER -	1	-
7	525798101	SCREW ITXSCFT -	2	-
8	505129705	ANTIVIBRATION ELEMENT -	1	-
9	505156904	FRONT HANDLE ASSY *incl. 5743863-01*	1	-
11	537088301	GROMMET -	1	-
12	576873004	SPIKE -	1	-
13	575793501	SCREW ITXPANM -	2	-
14	503222401	LOCK NUT -	2	-
15	577976301	SPIKE OUTER -	1	-
16	577976101	SPIKE -	1	-
17	525755103	SCREW ITXSCFM -	1	-
18	537024401	WEAR PROTECTION -	1	-
19	537089201	CHAIN CATCHER -	1	-
20	503222401	LOCK NUT -	1	-
1	576945104	SCREW KIT *Only screws*	1	-
2	525798103	SCREW ITXSCFT -	3	-
3	525798101	SCREW ITXSCFT -	1	-
4	505129705	ANTIVIBRATION ELEMENT -	1	-
5	505156903	FRONT HANDLE ASSY *incl. 5743863-01*	1	-
6	576873004	SPIKE	1	-

Ref.	Article N.	Description	Qty	Kit
		-		
7	575793501	SCREW ITXPANM -	2	-
8	503222401	LOCK NUT -	2	-
9	577976301	SPIKE OUTER *Spike Wrap*	1	-
10	577976101	SPIKE *Spike Wrap*	1	-
11	525755103	SCREW ITXSCFM -	1	-
12	537024401	WEAR PROTECTION -	1	-
13	537089201	CHAIN CATCHER -	1	-
14	503222401	LOCK NUT -	1	-
15	588966401	HANDLE -	1	-
1	575388905	FRONT HANDLE	1	-
2	525798103	SCREW ITXSCFT	2	-
3	525798101	SCREW ITXSCFT	3	-
4	505129705	ANTIVIBRATION ELEMENT	1	-
1	522741901	HANDLE INSERT -	1	-
2	578864601	THERMOSTAT ASSY -	1	-
3	537210801	RETAINER -	1	-
4	522611401	GENERATOR STATOR -	1	-
5	526818102	SCREW ITXSCM -	2	-
6	588168602	FOIL ELEMENT -	1	-
7	575388904	FRONT HANDLE -	1	-
8	525798103	SCREW ITXSCFT -	2	-
9	505157403	COVER -	1	-

Ref.	Article N.	Description	Qty	Kit
10	537252501	CONTACT PLATE -	1	-
11	510097801	CONTACT PLATE -	1	-
12	525887402	SCREW CITXPANT -	1	-
13	504872404	FLYWHEEL ASSY -	1	-
14	503220401	NUT -	1	-
15	503230042	WASHER -	2	-
16	501673501	SPRING -	2	-
17	501673201	PAWL -	2	-
18	506006901	SCREW -	2	-
19	505129705	ANTIVIBRATION ELEMENT -	1	-
20	525798101	SCREW ITXSCFT -	3	-
21	537088301	GROMMET -	1	-
22	582829601	THERMOSTAT ASSY *s/n up to 20164199999*	1	-
1	522795106	IGNITION MODULE ASSY *s/n up to - 20121401172 (14MHz)*	1	-
1	587306701	IGNITION MODULE *s/n from 20121401173 - (8MHz)*	1	-
2	501485404	SPARK PLUG CAP ASSY	1	-
3	525755203	SCREW ITXSCFM	2	-
4	575430601	WIRING ASSY *s/n up to - 20121401172 (14MHz)*	1	-
4	577967601	WIRING ASSY *s/n from 20121401173 - (8MHz)*	1	-
5	505178201	CABLE HOLDER	1	-
6	585321801	NUT	1	-
7	504872403	FLYWHEEL ASSY *XP*	1	-
7	504872404	FLYWHEEL ASSY *XPG*	1	-

Ref.	Article N.	Description	Qty	Kit
8	503230042	WASHER	2	-
9	501673501	SPRING	2	-
10	501673201	PAWL	2	-
11	506006901	SCREW	2	-
12	504043505	CABLE COVER	1	-
13	503238501	SHRINKAGE HOSE	2	-
14	525887401	SCREW CITXPANT	1	-
1	581914802	MUFFLER KIT -	1	-
2	724128759	SCREW CRPANM -	1	-
3	505171301	SPARK ARRESTER -	1	-
4	525825106	SCREW ITXSCM *s/n from 20133400001 -*	2	-
5	577656301	SLEEVE *s/n up to - 20133399999*	2	-
6	581918501	GASKET -	1	-
7	585178701	HEAT DEFLECTOR -	1	-
8	577902201	WASHER *s/n up to - 20133399999*	2	-
9	525762501	SCREW ITXSCM -	2	-
10	575270003	GASKET KIT *A=set of gaskets*	1	-
11	725537655	SCREW IHSCM *s/n up to - 20133399999*	2	-
1	580663714	SHORT BLOCK	1	-
1	505157501	AIR CONDUCTOR -	1	-
2	505159207	STARTER ASSY -	1	-
3	537232501	STARTER HANDLE -	1	-
4	505305125	STARTER ROPE -	1	-
5	576356601	SCREW ITXSCT -	1	-
6	537283201	SLEEVE -	1	-

Ref.	Article N.	Description	Qty	Kit
7	505158101	STARTER PULLEY ASSY -	1	-
8	525887401	SCREW CITXPANT -	2	-
9	598750301	SPRING CASSETTE ASSY -	1	-
10	525824501	SCREW CITXPANMO -	4	-
11	505159102	STARTER HOUSING -	1	-
12	523035606	LABEL *XPG*	1	-
12	523035605	LABEL *XP*	1	-
1	522675001	AIR FILTER ASSY *Nylon Mesh - 80 Micron Rating - Black - s/n up to - 20202600072*	1	-
1	522675002	AIR FILTER ASSY *Nylon Mesh - 44 Micron Rating - Yellow - s/n up to - 20202600072*	1	-
1	522675003	AIR FILTER ASSY *Non-Woven - White - s/n up to - 20202600072*	1	-
1	522675004	AIR FILTER ASSY *Nylon Mesh - 25 Micron Rating - Orange - s/n up to - 20202600072*	1	-
1	590458801	AIR FILTER *Nylon Mesh - 64 Micron Rating - Black - s/n from 20202600073 -*	1	-
1	590458802	AIR FILTER *Nylon Mesh - 25 Micron Rating - Yellow - s/n from 20202600073 -*	1	-
1	590458803	AIR FILTER ASSY *Non-Woven - Clear - s/n from 20202600073 -*	1	-
2	525397906	FILTER HOLDER ASSY *XPG s/n up to - 20202600072*	1	-
2	525397905	FILTER HOLDER ASSY *XP s/n up to - 20202600072*	1	-
2	597275501	FILTER HOLDER ASSY *XP s/n from 20202600073 -*	1	-
2	597275502	FILTER HOLDER ASSY *XPG s/n from 20202600073 -*	1	-
3	505176901	SHACKLE *s/n up to - 20202600072*	1	-
4	510017202	CHOKE CONTROL ASSY	1	-
5	505156201	SCREW	1	-
6	525588101	SEALING	1	-
7	503936601	PURGE	1	-

Ref.	Article N.	Description	Qty	Kit
8	574353503	SCREW ITXSCM	2	-
9	525344303	FUEL HOSE *XP s/n from 20173800688*	1	-
9	589357101	VENTILATING HOSE *s/n up to - 20154799999*	1	-
9	587645404	VENTILATING HOSE *s/n from 20154800001*	1	-
10	579194101	CARBURETTOR *s/n up to - 20121401172 (ZAMA EL44)*	1	-
10	501463307	CARBURETTOR KIT *s/n from 2012401173*	1	-
11	526818101	SCREW ITXSCM	4	-
12	505165202	FLANGE	1	-
13	503226503	SQUARE NUT	2	-
14	583964103	INLET PIPE	1	-
14	583964104	INLET PIPE *Cold resistant*	1	-
15	520290901	INTERMEDIATE WALL	1	-
16	525619201	SEALING	1	-
17	525619001	SEALING	1	-
18	523056801	FUEL HOSE	1	-
20	577536401	WIRING ASSY *s/n from 20121401173 -*	1	-
21	582025101	SUPPORT SLEEVE	1	-
22	598934501	FILTER UNIT *XP*	1	-
22	598934502	FILTER UNIT *XPG*	1	-
23	731231401	HEXAGON NUT *s/n from 20202600073 -*	1	-

CRANKSHAFT

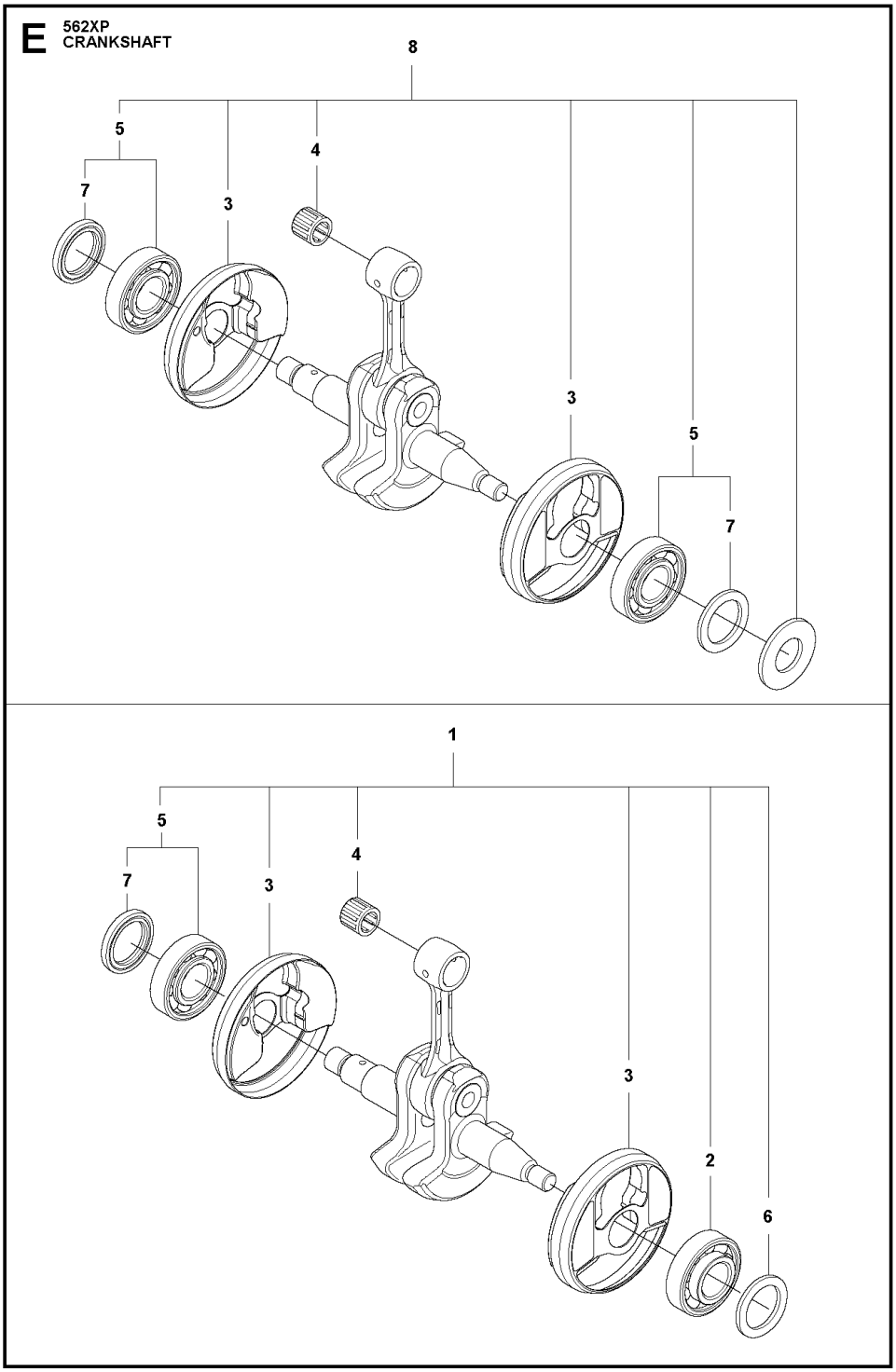

Ref.	Article N.	Description	Qty	Kit
1	575439201	TOOL -	1	-
2	522521101	COMBINATION WRENCH -	1	-
3	503558601	SPANNER -	1	-

Ref.	Article N.	Description	Qty	Kit
4	503558602	SPANNER -	1	-
5	503621201	GREASE -	1	-
6	501911401	GREASE GUN -	1	-
7	583897101	DIAGNOSTIC TOOL KIT -	1	-
8	576183401	CABLE ASSY *Diagnostics cable 14 Mhz*	1	-
9	522986502	WINTER KIT -	1	-
10	505166101	WINTER COVER -	1	-
11	503405901	WINTER PLUG -	1	-
12	503217016	SCREW CCRPANT -	2	-
13	740420100	O-RING -	2	-
14	578125501	WINTER PLUG -	1	-
15	576952201	CABLE ASSY *Diagnostics cable 8 MHz*	1	-
16	503267201	GLUE -	1	-
17	575880701	WRENCH -	1	-
1	579194101	CARBURETTOR *s/n up to - 20121401172 (ZAMA EL44)*	1	-
1	501463307	CARBURETTOR KIT	1	-
4	522517401	DIAPHRAGM	1	-
5	522517501	GASKET	1	-
6	503479701	VALVE	1	-
7	503665901	LEVER	1	-
8	537383401	SPRING	1	-
12	576414201	MAIN NOZZLE	1	-
17	503481801	SCREW	3	-
21	522517801	THROTTLE LEVER	1	-
26	503535701	STRAINER	1	-
27	537383101	DIAPHRAGM PUMP	1	-
28	537403301	DIAPHRAGM	1	-

Ref.	Article N.	Description	Qty	Kit
29	537020101	GASKET	1	-
32	503479001	SCREW	1	-
46	537177001	VALVE	1	-
50	522518901	GASKET KIT *B=set of gaskets*	1	-
51	582025101	SUPPORT SLEEVE	1	-
1	525250602	HAND GUARD -	1	-
2	526834501	SCREW -	2	-
3	577780201	BUSHING -	2	-
4	505197301	NUT -	2	-
5	525743305	CLUTCH COVER ASSY -	1	-
6	503751801	PIN -	1	-
7	526221801	SCREW CITXPANT -	5	-
8	505199301	KNEE JOINT ASSY -	1	-
9	503908301	BRAKE SPRING -	1	-
10	505199502	BRAKE BAND ASSY -	1	-
11	505201601	GUARD -	1	-
12	505199703	COVER -	1	-
14	523058001	LABEL *- up to s/n 20202399999*	1	-
15	575260402	CHAIN TENSIONER KIT -	1	-
16	740480702	O-RING -	1	-
17	503230063	WASHER -	1	-
20	537017401	BEARING SLEEVE -	1	-
22	525388701	CHAIN GUIDE -	1	-

Ref.	Article N.	Description	Qty	Kit
23	575793501	SCREW ITXPANM -	2	-
24	577975201	SPIKE OUTER -	1	-
25	503222401	LOCK NUT -	2	-
1	589809002	CLUTCH ASSY -	1	-
2	580653502	CLUTCH SPRING *s/n from 20133400001 - up to s/n 20164100192*	3	-
2	502164701	CLUTCH SPRING *s/n from 20164100193 -*	1	-
3	575261006	CLUTCH DRUM *- up to s/n 20202200048 3/8 x7*	1	-
3	575261005	CLUTCH DRUM ASSY *- up to s/n 20202200048 .325 x7*	1	-
3	575261010	CLUTCH DRUM ASSY -	1	-
4	501457402	RIM SPROCKET -	1	-
4	501598002	RIM SPROCKET *3/8x7*	1	-
5	503253401	NEEDLE BEARING -	1	-
6	577601101	WORM WHEEL *- up to s/n 20202200048*	1	-
6	586204601	WORM WHEEL *s/n from 20202200049 - 3/8*	1	-
7	505199909	OIL PUMP ASSY -	1	-
8	505200203	PUMP PISTON -	1	-
9	505200301	CASING -	1	-
10	503230060	WASHER -	2	-
11	503891601	SPRING -	1	-
12	505157001	ADJUSTMENT SCREW -	1	-
14	526818102	SCREW ITXSCM -	2	-
15	575847801	OIL HOSE	1	-

Ref.	Article N.	Description	Qty	Kit
		-		
16	504710003	OIL PLUMMET -	1	-
17	720123300	PARALLEL PIN -	2	-
18	503891501	SPRING -	1	-
19	505200101	PUMP CYLINDER -	1	-
20	503624903	SEALING PLUG -	1	-
21	598937706	CLUTCH DRUM ASSY -	1	-
1	588193901	CARBURETTOR AREA BASE	1	-
2	525755202	SCREW ITXSCFM	4	-
3	503869301	SUPPORT	2	-
4	581559201	BELLOWS	1	-
5	575380226	CRANKCASE ASSY	1	-
6	522742901	CHAIN GUIDE PLATE	1	-
7	575793501	SCREW ITXPANM	2	-
8	537403501	FILTER	1	-
9	530026119	CHECK VALVE	1	-
10	537210701	SPRING GUIDE	1	-
11	503436501	POSITION SPRING	1	-
12	505201201	CATCH	1	-
13	503751801	PIN	1	-
14	593806001	GUIDE BUSHING	2	-
15	522893801	BAR BOLT	2	-
16	525824401	SCREW ITXSCM	2	-
17	575841104	SCREW ITXSCM	6	-
18	537088301	GROMMET	1	-
19	577935201	SPIKE	1	-
20	522893901	CHAIN CATCHER	1	-
21	525798103	SCREW ITXSCFT	1	-
22	505125801	DEFLECTION LIMITER	1	-
23	595303003	SNAP LOCKING	1	-
24	588065501	AIR NOZZLE	1	-
25	526818101	SCREW ITXSCM	1	-
26	522620003	TANK CAP ASSY	1	-
27	589241101	GASKET	1	-

Ref.	Article N.	Description	Qty	Kit
28	503578901	HOLDER	1	-
29	525391201	RADIAL SEAL *- up to s/n 20202399999*	2	-
30	525887401	SCREW CITXPANT	1	-
31	575270003	GASKET KIT *A=set of gaskets*	1	-
32	525347601	BUMPER	1	-
33	577386801	CHAIN GUIDE	1	-
34	525887401	SCREW CITXPANT	1	-
35	526221801	SCREW CITXPANT	1	-
36	596911301	PROTECTIVE CAP *-up to s/n 20230403564*	1	-
1	575545215	CRANKSHAFT ASSY *- up to s/n 20202399999*	1	-
2	505133505	BALL BEARING	1	-
3	505133601	CUP	2	-
4	503256302	NEEDLE BEARING	1	-
5	525434204	BALL BEARING	2	-
6	525391201	RADIAL SEAL *- up to s/n 20202399999*	1	-
7	505416101	RADIAL SEAL	1	-
8	575545222	CRANKSHAFT ASSY *s/n from 20202400001 -*	1	-
1	587248702	CYLINDER COVER ASSY -	1	-
2	587149501	LABEL -	1	-
1	574519601	SPARK PLUG	1	-
2	582392701	SCREW	4	-
3	575276901	DECOMPRESSION VALVE	1	-
4	503552201	PLUG	1	-
5	576717602	SLEEVE	4	-
6	510164901	GASKET	1	-
7	575355805	CYLINDER ASSY *up to s/n - 201399999*	1	-
8	584807806	PISTON ASSY *up to s/n - 201399999*	1	-
9	505215701	PISTON RING *up to s/n - 20222500120*	1	-
10	737441000	SNAP RING	2	-
11	503256302	NEEDLE BEARING	1	-

Ref.	Article N.	Description	Qty	Kit
12	575270003	GASKET KIT *A=set of gaskets*	1	-
13	520291101	BUSHING	1	-
14	575355807	CYLINDER ASSY *s/n from 20141400001 -*	1	-
15	529504701	PISTON ASSY *s/n from 20141400001 -*	1	-
16	599998401	PISTON RING *s/n from 20222500121 -*	1	-
1	525887402	SCREW CITXPANT	1	-
2	504106301	HANDLE INSERT	1	-
4	575382205	FUEL TANK ASSY	1	-
5	501152901	TANK VENT ASSY	1	-
6	544099801	THROTTLE LOCKOUT	1	-
7	544099901	SPRING	1	-
8	505157701	THROTTLE	1	-
9	720182520	PARALLEL PIN	1	-
10	521887901	THROTTLE CABLE ASSY	1	-
11	525798102	SCREW ITXSCFT	1	-
12	573993503	FUEL HOSE	1	-
13	503443203	FUEL FILTER *18-40 µm (Blue)*	1	-
14	505165901	COVER *not XPW*	1	-
15	586312103	ANTIVIBRATION ELEMENT	1	-
16	505128702	ANTIVIBRATION ELEMENT	1	-
17	523085501	DEFLECTION LIMITER	1	-
18	501007601	SUPPORT	1	-
19	522620003	TANK CAP ASSY	1	-
20	589241101	GASKET	1	-
21	503578901	HOLDER	1	-
22	525798103	SCREW ITXSCFT	1	-
23	577844301	DECAL	1	-
24	529578202	FUEL HOSE ASSY *From s/n 20161000481- with magnet*	1	-
1	586146304	HANDLE SYSTEM -	1	-
2	525798103	SCREW ITXSCFT -	3	-
3	510097801	CONTACT PLATE -	1	-

Ref.	Article N.	Description	Qty	Kit
4	537252501	CONTACT PLATE -	1	-
5	525887401	SCREW CITXPANT -	1	-
6	505157403	COVER -	1	-
7	525798101	SCREW ITXSCFT -	2	-
8	505129705	ANTIVIBRATION ELEMENT -	1	-
9	505156904	FRONT HANDLE ASSY *incl. 5743863-01*	1	-
11	537088301	GROMMET -	1	-
12	576873004	SPIKE -	1	-
13	575793501	SCREW ITXPANM -	2	-
14	503222401	LOCK NUT -	2	-
15	577976301	SPIKE OUTER -	1	-
16	577976101	SPIKE -	1	-
17	525755103	SCREW ITXSCFM -	1	-
18	537024401	WEAR PROTECTION -	1	-
19	537089201	CHAIN CATCHER -	1	-
20	503222401	LOCK NUT -	1	-
1	576945104	SCREW KIT *Only screws*	1	-
2	525798103	SCREW ITXSCFT -	3	-
3	525798101	SCREW ITXSCFT -	1	-
4	505129705	ANTIVIBRATION ELEMENT -	1	-
5	505156903	FRONT HANDLE ASSY *incl. 5743863-01*	1	-
6	576873004	SPIKE	1	-

Ref.	Article N.	Description	Qty	Kit
		-		
7	575793501	SCREW ITXPANM -	2	-
8	503222401	LOCK NUT -	2	-
9	577976301	SPIKE OUTER *Spike Wrap*	1	-
10	577976101	SPIKE *Spike Wrap*	1	-
11	525755103	SCREW ITXSCFM -	1	-
12	537024401	WEAR PROTECTION -	1	-
13	537089201	CHAIN CATCHER -	1	-
14	503222401	LOCK NUT -	1	-
15	588966401	HANDLE -	1	-
1	575388905	FRONT HANDLE	1	-
2	525798103	SCREW ITXSCFT	2	-
3	525798101	SCREW ITXSCFT	3	-
4	505129705	ANTIVIBRATION ELEMENT	1	-
1	522741901	HANDLE INSERT -	1	-
2	578864601	THERMOSTAT ASSY -	1	-
3	537210801	RETAINER -	1	-
4	522611401	GENERATOR STATOR -	1	-
5	526818102	SCREW ITXSCM -	2	-
6	588168602	FOIL ELEMENT -	1	-
7	575388904	FRONT HANDLE -	1	-
8	525798103	SCREW ITXSCFT -	2	-
9	505157403	COVER -	1	-

Ref.	Article N.	Description	Qty	Kit
10	537252501	CONTACT PLATE -	1	-
11	510097801	CONTACT PLATE -	1	-
12	525887402	SCREW CITXPANT -	1	-
13	504872404	FLYWHEEL ASSY -	1	-
14	503220401	NUT -	1	-
15	503230042	WASHER -	2	-
16	501673501	SPRING -	2	-
17	501673201	PAWL -	2	-
18	506006901	SCREW -	2	-
19	505129705	ANTIVIBRATION ELEMENT -	1	-
20	525798101	SCREW ITXSCFT -	3	-
21	537088301	GROMMET -	1	-
22	582829601	THERMOSTAT ASSY *s/n up to 20164199999*	1	-
1	522795106	IGNITION MODULE ASSY *s/n up to - 20121401172 (14MHz)*	1	-
1	587306701	IGNITION MODULE *s/n from 20121401173 - (8MHz)*	1	-
2	501485404	SPARK PLUG CAP ASSY	1	-
3	525755203	SCREW ITXSCFM	2	-
4	575430601	WIRING ASSY *s/n up to - 20121401172 (14MHz)*	1	-
4	577967601	WIRING ASSY *s/n from 20121401173 - (8MHz)*	1	-
5	505178201	CABLE HOLDER	1	-
6	585321801	NUT	1	-
7	504872403	FLYWHEEL ASSY *XP*	1	-
7	504872404	FLYWHEEL ASSY *XPG*	1	-

Ref.	Article N.	Description	Qty	Kit
8	503230042	WASHER	2	-
9	501673501	SPRING	2	-
10	501673201	PAWL	2	-
11	506006901	SCREW	2	-
12	504043505	CABLE COVER	1	-
13	503238501	SHRINKAGE HOSE	2	-
14	525887401	SCREW CITXPANT	1	-
1	581914802	MUFFLER KIT -	1	-
2	724128759	SCREW CRPANM -	1	-
3	505171301	SPARK ARRESTER -	1	-
4	525825106	SCREW ITXSCM *s/n from 20133400001 -*	2	-
5	577656301	SLEEVE *s/n up to - 20133399999*	2	-
6	581918501	GASKET -	1	-
7	585178701	HEAT DEFLECTOR -	1	-
8	577902201	WASHER *s/n up to - 20133399999*	2	-
9	525762501	SCREW ITXSCM -	2	-
10	575270003	GASKET KIT *A=set of gaskets*	1	-
11	725537655	SCREW IHSCM *s/n up to - 20133399999*	2	-
1	580663714	SHORT BLOCK	1	-
1	505157501	AIR CONDUCTOR -	1	-
2	505159207	STARTER ASSY -	1	-
3	537232501	STARTER HANDLE -	1	-
4	505305125	STARTER ROPE -	1	-
5	576356601	SCREW ITXSCT -	1	-
6	537283201	SLEEVE -	1	-

Ref.	Article N.	Description	Qty	Kit
7	505158101	STARTER PULLEY ASSY -	1	-
8	525887401	SCREW CITXPANT -	2	-
9	598750301	SPRING CASSETTE ASSY -	1	-
10	525824501	SCREW CITXPANMO -	4	-
11	505159102	STARTER HOUSING -	1	-
12	523035606	LABEL *XPG*	1	-
12	523035605	LABEL *XP*	1	-
1	522675001	AIR FILTER ASSY *Nylon Mesh - 80 Micron Rating - Black - s/n up to - 20202600072*	1	-
1	522675002	AIR FILTER ASSY *Nylon Mesh - 44 Micron Rating - Yellow - s/n up to - 20202600072*	1	-
1	522675003	AIR FILTER ASSY *Non-Woven - White - s/n up to - 20202600072*	1	-
1	522675004	AIR FILTER ASSY *Nylon Mesh - 25 Micron Rating - Orange - s/n up to - 20202600072*	1	-
1	590458801	AIR FILTER *Nylon Mesh - 64 Micron Rating - Black - s/n from 20202600073 -*	1	-
1	590458802	AIR FILTER *Nylon Mesh - 25 Micron Rating - Yellow - s/n from 20202600073 -*	1	-
1	590458803	AIR FILTER ASSY *Non-Woven - Clear - s/n from 20202600073 -*	1	-
2	525397906	FILTER HOLDER ASSY *XPG s/n up to - 20202600072*	1	-
2	525397905	FILTER HOLDER ASSY *XP s/n up to - 20202600072*	1	-
2	597275501	FILTER HOLDER ASSY *XP s/n from 20202600073 -*	1	-
2	597275502	FILTER HOLDER ASSY *XPG s/n from 20202600073 -*	1	-
3	505176901	SHACKLE *s/n up to - 20202600072*	1	-
4	510017202	CHOKE CONTROL ASSY	1	-
5	505156201	SCREW	1	-
6	525588101	SEALING	1	-
7	503936601	PURGE	1	-

Ref.	Article N.	Description	Qty	Kit
8	574353503	SCREW ITXSCM	2	-
9	525344303	FUEL HOSE *XP s/n from 20173800688*	1	-
9	589357101	VENTILATING HOSE *s/n up to - 20154799999*	1	-
9	587645404	VENTILATING HOSE *s/n from 20154800001*	1	-
10	579194101	CARBURETTOR *s/n up to - 20121401172 (ZAMA EL44)*	1	-
10	501463307	CARBURETTOR KIT *s/n from 2012401173*	1	-
11	526818101	SCREW ITXSCM	4	-
12	505165202	FLANGE	1	-
13	503226503	SQUARE NUT	2	-
14	583964103	INLET PIPE	1	-
14	583964104	INLET PIPE *Cold resistant*	1	-
15	520290901	INTERMEDIATE WALL	1	-
16	525619201	SEALING	1	-
17	525619001	SEALING	1	-
18	523056801	FUEL HOSE	1	-
20	577536401	WIRING ASSY *s/n from 20121401173 -*	1	-
21	582025101	SUPPORT SLEEVE	1	-
22	598934501	FILTER UNIT *XP*	1	-
22	598934502	FILTER UNIT *XPG*	1	-
23	731231401	HEXAGON NUT *s/n from 20202600073 -*	1	-

CYLINDER COVER

C 562XP
CYLINDER COVER

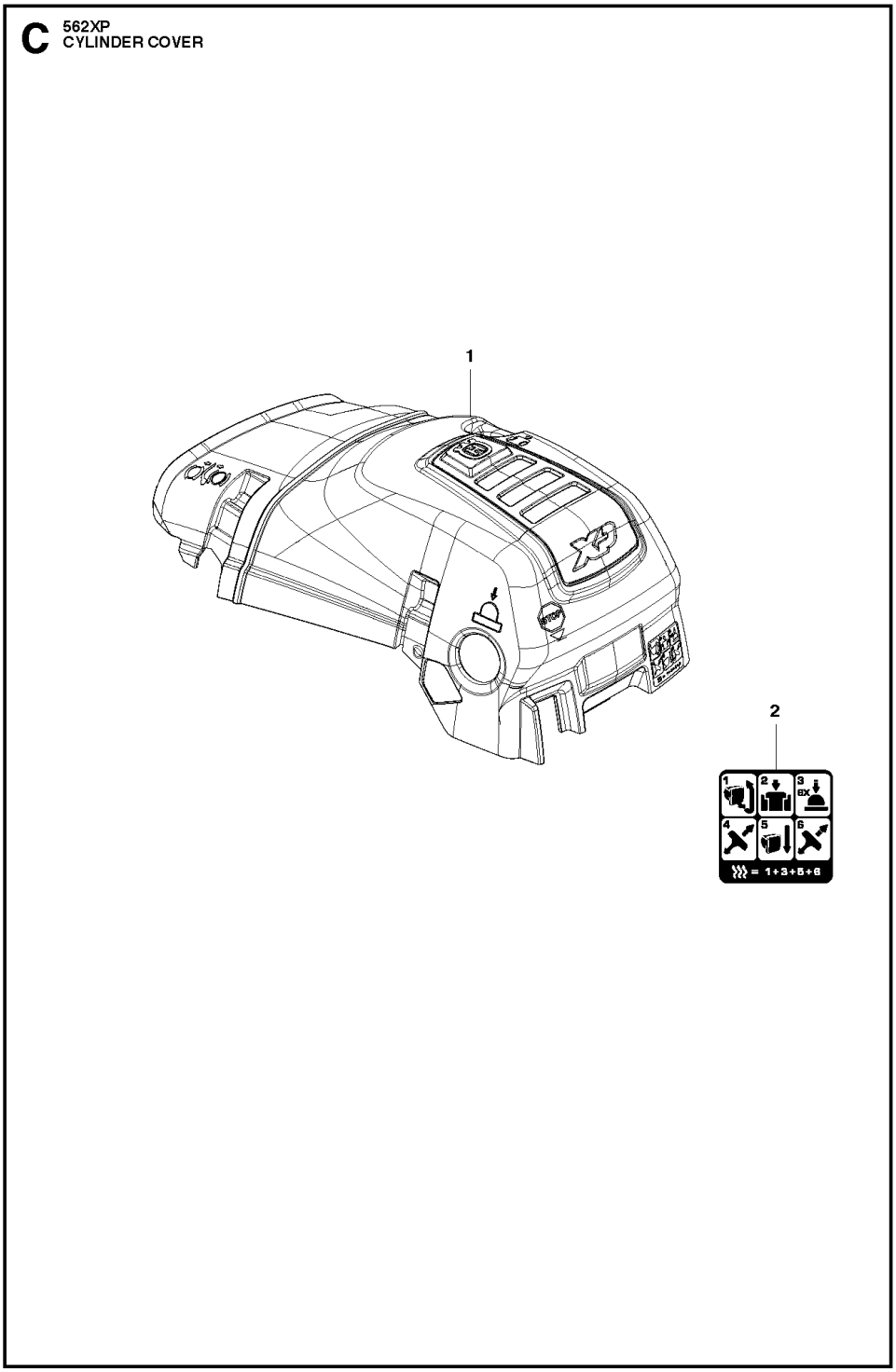

Ref.	Article N.	Description	Qty	Kit
1	575439201	TOOL -	1	-
2	522521101	COMBINATION WRENCH -	1	-
3	503558601	SPANNER -	1	-

Ref.	Article N.	Description	Qty	Kit
4	503558602	SPANNER -	1	-
5	503621201	GREASE -	1	-
6	501911401	GREASE GUN -	1	-
7	583897101	DIAGNOSTIC TOOL KIT -	1	-
8	576183401	CABLE ASSY *Diagnostics cable 14 Mhz*	1	-
9	522986502	WINTER KIT -	1	-
10	505166101	WINTER COVER -	1	-
11	503405901	WINTER PLUG -	1	-
12	503217016	SCREW CCRPANT -	2	-
13	740420100	O-RING -	2	-
14	578125501	WINTER PLUG -	1	-
15	576952201	CABLE ASSY *Diagnostics cable 8 MHz*	1	-
16	503267201	GLUE -	1	-
17	575880701	WRENCH -	1	-
1	579194101	CARBURETTOR *s/n up to - 20121401172 (ZAMA EL44)*	1	-
1	501463307	CARBURETTOR KIT	1	-
4	522517401	DIAPHRAGM	1	-
5	522517501	GASKET	1	-
6	503479701	VALVE	1	-
7	503665901	LEVER	1	-
8	537383401	SPRING	1	-
12	576414201	MAIN NOZZLE	1	-
17	503481801	SCREW	3	-
21	522517801	THROTTLE LEVER	1	-
26	503535701	STRAINER	1	-
27	537383101	DIAPHRAGM PUMP	1	-
28	537403301	DIAPHRAGM	1	-

Ref.	Article N.	Description	Qty	Kit
29	537020101	GASKET	1	-
32	503479001	SCREW	1	-
46	537177001	VALVE	1	-
50	522518901	GASKET KIT *B=set of gaskets*	1	-
51	582025101	SUPPORT SLEEVE	1	-
1	525250602	HAND GUARD -	1	-
2	526834501	SCREW -	2	-
3	577780201	BUSHING -	2	-
4	505197301	NUT -	2	-
5	525743305	CLUTCH COVER ASSY -	1	-
6	503751801	PIN -	1	-
7	526221801	SCREW CITXPANT -	5	-
8	505199301	KNEE JOINT ASSY -	1	-
9	503908301	BRAKE SPRING -	1	-
10	505199502	BRAKE BAND ASSY -	1	-
11	505201601	GUARD -	1	-
12	505199703	COVER -	1	-
14	523058001	LABEL *- up to s/n 20202399999*	1	-
15	575260402	CHAIN TENSIONER KIT -	1	-
16	740480702	O-RING -	1	-
17	503230063	WASHER -	1	-
20	537017401	BEARING SLEEVE -	1	-
22	525388701	CHAIN GUIDE -	1	-

Ref.	Article N.	Description	Qty	Kit
23	575793501	SCREW ITXPANM -	2	-
24	577975201	SPIKE OUTER -	1	-
25	503222401	LOCK NUT -	2	-
1	589809002	CLUTCH ASSY -	1	-
2	580653502	CLUTCH SPRING *s/n from 20133400001 - up to s/n 20164100192*	3	-
2	502164701	CLUTCH SPRING *s/n from 20164100193 -*	1	-
3	575261006	CLUTCH DRUM *- up to s/n 20202200048 3/8 x7*	1	-
3	575261005	CLUTCH DRUM ASSY *- up to s/n 20202200048 .325 x7*	1	-
3	575261010	CLUTCH DRUM ASSY -	1	-
4	501457402	RIM SPROCKET -	1	-
4	501598002	RIM SPROCKET *3/8x7*	1	-
5	503253401	NEEDLE BEARING -	1	-
6	577601101	WORM WHEEL *- up to s/n 20202200048*	1	-
6	586204601	WORM WHEEL *s/n from 20202200049 - 3/8*	1	-
7	505199909	OIL PUMP ASSY -	1	-
8	505200203	PUMP PISTON -	1	-
9	505200301	CASING -	1	-
10	503230060	WASHER -	2	-
11	503891601	SPRING -	1	-
12	505157001	ADJUSTMENT SCREW -	1	-
14	526818102	SCREW ITXSCM -	2	-
15	575847801	OIL HOSE	1	-

Ref.	Article N.	Description	Qty	Kit
		-		
16	504710003	OIL PLUMMET -	1	-
17	720123300	PARALLEL PIN -	2	-
18	503891501	SPRING -	1	-
19	505200101	PUMP CYLINDER -	1	-
20	503624903	SEALING PLUG -	1	-
21	598937706	CLUTCH DRUM ASSY -	1	-
1	588193901	CARBURETTOR AREA BASE	1	-
2	525755202	SCREW ITXSCFM	4	-
3	503869301	SUPPORT	2	-
4	581559201	BELLOWS	1	-
5	575380226	CRANKCASE ASSY	1	-
6	522742901	CHAIN GUIDE PLATE	1	-
7	575793501	SCREW ITXPANM	2	-
8	537403501	FILTER	1	-
9	530026119	CHECK VALVE	1	-
10	537210701	SPRING GUIDE	1	-
11	503436501	POSITION SPRING	1	-
12	505201201	CATCH	1	-
13	503751801	PIN	1	-
14	593806001	GUIDE BUSHING	2	-
15	522893801	BAR BOLT	2	-
16	525824401	SCREW ITXSCM	2	-
17	575841104	SCREW ITXSCM	6	-
18	537088301	GROMMET	1	-
19	577935201	SPIKE	1	-
20	522893901	CHAIN CATCHER	1	-
21	525798103	SCREW ITXSCFT	1	-
22	505125801	DEFLECTION LIMITER	1	-
23	595303003	SNAP LOCKING	1	-
24	588065501	AIR NOZZLE	1	-
25	526818101	SCREW ITXSCM	1	-
26	522620003	TANK CAP ASSY	1	-
27	589241101	GASKET	1	-

Ref.	Article N.	Description	Qty	Kit
28	503578901	HOLDER	1	-
29	525391201	RADIAL SEAL *- up to s/n 20202399999*	2	-
30	525887401	SCREW CITXPANT	1	-
31	575270003	GASKET KIT *A=set of gaskets*	1	-
32	525347601	BUMPER	1	-
33	577386801	CHAIN GUIDE	1	-
34	525887401	SCREW CITXPANT	1	-
35	526221801	SCREW CITXPANT	1	-
36	596911301	PROTECTIVE CAP *-up to s/n 20230403564*	1	-
1	575545215	CRANKSHAFT ASSY *- up to s/n 20202399999*	1	-
2	505133505	BALL BEARING	1	-
3	505133601	CUP	2	-
4	503256302	NEEDLE BEARING	1	-
5	525434204	BALL BEARING	2	-
6	525391201	RADIAL SEAL *- up to s/n 20202399999*	1	-
7	505416101	RADIAL SEAL	1	-
8	575545222	CRANKSHAFT ASSY *s/n from 20202400001 -*	1	-
1	587248702	CYLINDER COVER ASSY -	1	-
2	587149501	LABEL -	1	-
1	574519601	SPARK PLUG	1	-
2	582392701	SCREW	4	-
3	575276901	DECOMPRESSION VALVE	1	-
4	503552201	PLUG	1	-
5	576717602	SLEEVE	4	-
6	510164901	GASKET	1	-
7	575355805	CYLINDER ASSY *up to s/n - 201399999*	1	-
8	584807806	PISTON ASSY *up to s/n - 201399999*	1	-
9	505215701	PISTON RING *up to s/n - 20222500120*	1	-
10	737441000	SNAP RING	2	-
11	503256302	NEEDLE BEARING	1	-

Ref.	Article N.	Description	Qty	Kit
12	575270003	GASKET KIT *A=set of gaskets*	1	-
13	520291101	BUSHING	1	-
14	575355807	CYLINDER ASSY *s/n from 20141400001 -*	1	-
15	529504701	PISTON ASSY *s/n from 20141400001 -*	1	-
16	599998401	PISTON RING *s/n from 20222500121 -*	1	-
1	525887402	SCREW CITXPANT	1	-
2	504106301	HANDLE INSERT	1	-
4	575382205	FUEL TANK ASSY	1	-
5	501152901	TANK VENT ASSY	1	-
6	544099801	THROTTLE LOCKOUT	1	-
7	544099901	SPRING	1	-
8	505157701	THROTTLE	1	-
9	720182520	PARALLEL PIN	1	-
10	521887901	THROTTLE CABLE ASSY	1	-
11	525798102	SCREW ITXSCFT	1	-
12	573993503	FUEL HOSE	1	-
13	503443203	FUEL FILTER *18-40 µm (Blue)*	1	-
14	505165901	COVER *not XPW*	1	-
15	586312103	ANTIVIBRATION ELEMENT	1	-
16	505128702	ANTIVIBRATION ELEMENT	1	-
17	523085501	DEFLECTION LIMITER	1	-
18	501007601	SUPPORT	1	-
19	522620003	TANK CAP ASSY	1	-
20	589241101	GASKET	1	-
21	503578901	HOLDER	1	-
22	525798103	SCREW ITXSCFT	1	-
23	577844301	DECAL	1	-
24	529578202	FUEL HOSE ASSY *From s/n 20161000481- with magnet*	1	-
1	586146304	HANDLE SYSTEM -	1	-
2	525798103	SCREW ITXSCFT -	3	-
3	510097801	CONTACT PLATE -	1	-

Ref.	Article N.	Description	Qty	Kit
4	537252501	CONTACT PLATE -	1	-
5	525887401	SCREW CITXPANT -	1	-
6	505157403	COVER -	1	-
7	525798101	SCREW ITXSCFT -	2	-
8	505129705	ANTIVIBRATION ELEMENT -	1	-
9	505156904	FRONT HANDLE ASSY *incl. 5743863-01*	1	-
11	537088301	GROMMET -	1	-
12	576873004	SPIKE -	1	-
13	575793501	SCREW ITXPANM -	2	-
14	503222401	LOCK NUT -	2	-
15	577976301	SPIKE OUTER -	1	-
16	577976101	SPIKE -	1	-
17	525755103	SCREW ITXSCFM -	1	-
18	537024401	WEAR PROTECTION -	1	-
19	537089201	CHAIN CATCHER -	1	-
20	503222401	LOCK NUT -	1	-
1	576945104	SCREW KIT *Only screws*	1	-
2	525798103	SCREW ITXSCFT -	3	-
3	525798101	SCREW ITXSCFT -	1	-
4	505129705	ANTIVIBRATION ELEMENT -	1	-
5	505156903	FRONT HANDLE ASSY *incl. 5743863-01*	1	-
6	576873004	SPIKE	1	-

Ref.	Article N.	Description	Qty	Kit
		-		
7	575793501	SCREW ITXPANM -	2	-
8	503222401	LOCK NUT -	2	-
9	577976301	SPIKE OUTER *Spike Wrap*	1	-
10	577976101	SPIKE *Spike Wrap*	1	-
11	525755103	SCREW ITXSCFM -	1	-
12	537024401	WEAR PROTECTION -	1	-
13	537089201	CHAIN CATCHER -	1	-
14	503222401	LOCK NUT -	1	-
15	588966401	HANDLE -	1	-
1	575388905	FRONT HANDLE	1	-
2	525798103	SCREW ITXSCFT	2	-
3	525798101	SCREW ITXSCFT	3	-
4	505129705	ANTIVIBRATION ELEMENT	1	-
1	522741901	HANDLE INSERT -	1	-
2	578864601	THERMOSTAT ASSY -	1	-
3	537210801	RETAINER -	1	-
4	522611401	GENERATOR STATOR -	1	-
5	526818102	SCREW ITXSCM -	2	-
6	588168602	FOIL ELEMENT -	1	-
7	575388904	FRONT HANDLE -	1	-
8	525798103	SCREW ITXSCFT -	2	-
9	505157403	COVER -	1	-

Ref.	Article N.	Description	Qty	Kit
10	537252501	CONTACT PLATE -	1	-
11	510097801	CONTACT PLATE -	1	-
12	525887402	SCREW CITXPANT -	1	-
13	504872404	FLYWHEEL ASSY -	1	-
14	503220401	NUT -	1	-
15	503230042	WASHER -	2	-
16	501673501	SPRING -	2	-
17	501673201	PAWL -	2	-
18	506006901	SCREW -	2	-
19	505129705	ANTIVIBRATION ELEMENT -	1	-
20	525798101	SCREW ITXSCFT -	3	-
21	537088301	GROMMET -	1	-
22	582829601	THERMOSTAT ASSY *s/n up to 20164199999*	1	-
1	522795106	IGNITION MODULE ASSY *s/n up to - 20121401172 (14MHz)*	1	-
1	587306701	IGNITION MODULE *s/n from 20121401173 - (8MHz)*	1	-
2	501485404	SPARK PLUG CAP ASSY	1	-
3	525755203	SCREW ITXSCFM	2	-
4	575430601	WIRING ASSY *s/n up to - 20121401172 (14MHz)*	1	-
4	577967601	WIRING ASSY *s/n from 20121401173 - (8MHz)*	1	-
5	505178201	CABLE HOLDER	1	-
6	585321801	NUT	1	-
7	504872403	FLYWHEEL ASSY *XP*	1	-
7	504872404	FLYWHEEL ASSY *XPG*	1	-

Ref.	Article N.	Description	Qty	Kit
8	503230042	WASHER	2	-
9	501673501	SPRING	2	-
10	501673201	PAWL	2	-
11	506006901	SCREW	2	-
12	504043505	CABLE COVER	1	-
13	503238501	SHRINKAGE HOSE	2	-
14	525887401	SCREW CITXPANT	1	-
1	581914802	MUFFLER KIT -	1	-
2	724128759	SCREW CRPANM -	1	-
3	505171301	SPARK ARRESTER -	1	-
4	525825106	SCREW ITXSCM *s/n from 20133400001 -*	2	-
5	577656301	SLEEVE *s/n up to - 20133399999*	2	-
6	581918501	GASKET -	1	-
7	585178701	HEAT DEFLECTOR -	1	-
8	577902201	WASHER *s/n up to - 20133399999*	2	-
9	525762501	SCREW ITXSCM -	2	-
10	575270003	GASKET KIT *A=set of gaskets*	1	-
11	725537655	SCREW IHSCM *s/n up to - 20133399999*	2	-
1	580663714	SHORT BLOCK	1	-
1	505157501	AIR CONDUCTOR -	1	-
2	505159207	STARTER ASSY -	1	-
3	537232501	STARTER HANDLE -	1	-
4	505305125	STARTER ROPE -	1	-
5	576356601	SCREW ITXSCT -	1	-
6	537283201	SLEEVE -	1	-

Ref.	Article N.	Description	Qty	Kit
7	505158101	STARTER PULLEY ASSY -	1	-
8	525887401	SCREW CITXPANT -	2	-
9	598750301	SPRING CASSETTE ASSY -	1	-
10	525824501	SCREW CITXPANMO -	4	-
11	505159102	STARTER HOUSING -	1	-
12	523035606	LABEL *XPG*	1	-
12	523035605	LABEL *XP*	1	-
1	522675001	AIR FILTER ASSY *Nylon Mesh - 80 Micron Rating - Black - s/n up to - 20202600072*	1	-
1	522675002	AIR FILTER ASSY *Nylon Mesh - 44 Micron Rating - Yellow - s/n up to - 20202600072*	1	-
1	522675003	AIR FILTER ASSY *Non-Woven - White - s/n up to - 20202600072*	1	-
1	522675004	AIR FILTER ASSY *Nylon Mesh - 25 Micron Rating - Orange - s/n up to - 20202600072*	1	-
1	590458801	AIR FILTER *Nylon Mesh - 64 Micron Rating - Black - s/n from 20202600073 -*	1	-
1	590458802	AIR FILTER *Nylon Mesh - 25 Micron Rating - Yellow - s/n from 20202600073 -*	1	-
1	590458803	AIR FILTER ASSY *Non-Woven - Clear - s/n from 20202600073 -*	1	-
2	525397906	FILTER HOLDER ASSY *XPG s/n up to - 20202600072*	1	-
2	525397905	FILTER HOLDER ASSY *XP s/n up to - 20202600072*	1	-
2	597275501	FILTER HOLDER ASSY *XP s/n from 20202600073 -*	1	-
2	597275502	FILTER HOLDER ASSY *XPG s/n from 20202600073 -*	1	-
3	505176901	SHACKLE *s/n up to - 20202600072*	1	-
4	510017202	CHOKE CONTROL ASSY	1	-
5	505156201	SCREW	1	-
6	525588101	SEALING	1	-
7	503936601	PURGE	1	-

Ref.	Article N.	Description	Qty	Kit
8	574353503	SCREW ITXSCM	2	-
9	525344303	FUEL HOSE *XP s/n from 20173800688*	1	-
9	589357101	VENTILATING HOSE *s/n up to - 20154799999*	1	-
9	587645404	VENTILATING HOSE *s/n from 20154800001*	1	-
10	579194101	CARBURETTOR *s/n up to - 20121401172 (ZAMA EL44)*	1	-
10	501463307	CARBURETTOR KIT *s/n from 2012401173*	1	-
11	526818101	SCREW ITXSCM	4	-
12	505165202	FLANGE	1	-
13	503226503	SQUARE NUT	2	-
14	583964103	INLET PIPE	1	-
14	583964104	INLET PIPE *Cold resistant*	1	-
15	520290901	INTERMEDIATE WALL	1	-
16	525619201	SEALING	1	-
17	525619001	SEALING	1	-
18	523056801	FUEL HOSE	1	-
20	577536401	WIRING ASSY *s/n from 20121401173 -*	1	-
21	582025101	SUPPORT SLEEVE	1	-
22	598934501	FILTER UNIT *XP*	1	-
22	598934502	FILTER UNIT *XPG*	1	-
23	731231401	HEXAGON NUT *s/n from 20202600073 -*	1	-

CYLINDER PISTON

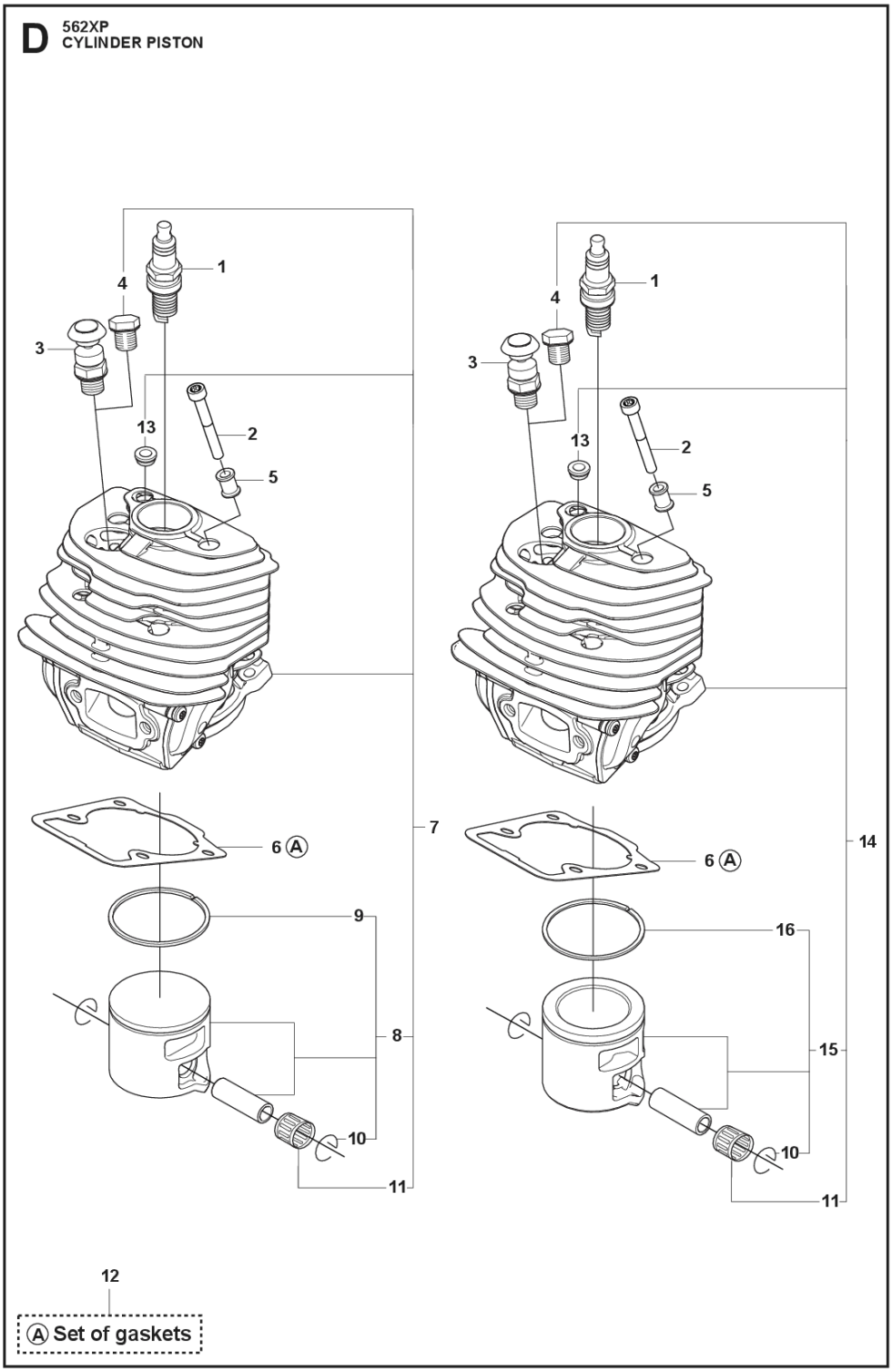

Ref.	Article N.	Description	Qty	Kit
1	575439201	TOOL -	1	-
2	522521101	COMBINATION WRENCH -	1	-
3	503558601	SPANNER -	1	-

Ref.	Article N.	Description	Qty	Kit
4	503558602	SPANNER -	1	-
5	503621201	GREASE -	1	-
6	501911401	GREASE GUN -	1	-
7	583897101	DIAGNOSTIC TOOL KIT -	1	-
8	576183401	CABLE ASSY *Diagnostics cable 14 Mhz*	1	-
9	522986502	WINTER KIT -	1	-
10	505166101	WINTER COVER -	1	-
11	503405901	WINTER PLUG -	1	-
12	503217016	SCREW CCRPANT -	2	-
13	740420100	O-RING -	2	-
14	578125501	WINTER PLUG -	1	-
15	576952201	CABLE ASSY *Diagnostics cable 8 MHz*	1	-
16	503267201	GLUE -	1	-
17	575880701	WRENCH -	1	-
1	579194101	CARBURETTOR *s/n up to - 20121401172 (ZAMA EL44)*	1	-
1	501463307	CARBURETTOR KIT	1	-
4	522517401	DIAPHRAGM	1	-
5	522517501	GASKET	1	-
6	503479701	VALVE	1	-
7	503665901	LEVER	1	-
8	537383401	SPRING	1	-
12	576414201	MAIN NOZZLE	1	-
17	503481801	SCREW	3	-
21	522517801	THROTTLE LEVER	1	-
26	503535701	STRAINER	1	-
27	537383101	DIAPHRAGM PUMP	1	-
28	537403301	DIAPHRAGM	1	-

Ref.	Article N.	Description	Qty	Kit
29	537020101	GASKET	1	-
32	503479001	SCREW	1	-
46	537177001	VALVE	1	-
50	522518901	GASKET KIT *B=set of gaskets*	1	-
51	582025101	SUPPORT SLEEVE	1	-
1	525250602	HAND GUARD -	1	-
2	526834501	SCREW -	2	-
3	577780201	BUSHING -	2	-
4	505197301	NUT -	2	-
5	525743305	CLUTCH COVER ASSY -	1	-
6	503751801	PIN -	1	-
7	526221801	SCREW CITXPANT -	5	-
8	505199301	KNEE JOINT ASSY -	1	-
9	503908301	BRAKE SPRING -	1	-
10	505199502	BRAKE BAND ASSY -	1	-
11	505201601	GUARD -	1	-
12	505199703	COVER -	1	-
14	523058001	LABEL *- up to s/n 20202399999*	1	-
15	575260402	CHAIN TENSIONER KIT -	1	-
16	740480702	O-RING -	1	-
17	503230063	WASHER -	1	-
20	537017401	BEARING SLEEVE -	1	-
22	525388701	CHAIN GUIDE -	1	-

Ref.	Article N.	Description	Qty	Kit
23	575793501	SCREW ITXPANM -	2	-
24	577975201	SPIKE OUTER -	1	-
25	503222401	LOCK NUT -	2	-
1	589809002	CLUTCH ASSY -	1	-
2	580653502	CLUTCH SPRING *s/n from 20133400001 - up to s/n 20164100192*	3	-
2	502164701	CLUTCH SPRING *s/n from 20164100193 -*	1	-
3	575261006	CLUTCH DRUM *- up to s/n 20202200048 3/8 x7*	1	-
3	575261005	CLUTCH DRUM ASSY *- up to s/n 20202200048 .325 x7*	1	-
3	575261010	CLUTCH DRUM ASSY -	1	-
4	501457402	RIM SPROCKET -	1	-
4	501598002	RIM SPROCKET *3/8x7*	1	-
5	503253401	NEEDLE BEARING -	1	-
6	577601101	WORM WHEEL *- up to s/n 20202200048*	1	-
6	586204601	WORM WHEEL *s/n from 20202200049 - 3/8*	1	-
7	505199909	OIL PUMP ASSY -	1	-
8	505200203	PUMP PISTON -	1	-
9	505200301	CASING -	1	-
10	503230060	WASHER -	2	-
11	503891601	SPRING -	1	-
12	505157001	ADJUSTMENT SCREW -	1	-
14	526818102	SCREW ITXSCM -	2	-
15	575847801	OIL HOSE	1	-

Ref.	Article N.	Description	Qty	Kit
		-		
16	504710003	OIL PLUMMET -	1	-
17	720123300	PARALLEL PIN -	2	-
18	503891501	SPRING -	1	-
19	505200101	PUMP CYLINDER -	1	-
20	503624903	SEALING PLUG -	1	-
21	598937706	CLUTCH DRUM ASSY -	1	-
1	588193901	CARBURETTOR AREA BASE	1	-
2	525755202	SCREW ITXSCFM	4	-
3	503869301	SUPPORT	2	-
4	581559201	BELLOWS	1	-
5	575380226	CRANKCASE ASSY	1	-
6	522742901	CHAIN GUIDE PLATE	1	-
7	575793501	SCREW ITXPANM	2	-
8	537403501	FILTER	1	-
9	530026119	CHECK VALVE	1	-
10	537210701	SPRING GUIDE	1	-
11	503436501	POSITION SPRING	1	-
12	505201201	CATCH	1	-
13	503751801	PIN	1	-
14	593806001	GUIDE BUSHING	2	-
15	522893801	BAR BOLT	2	-
16	525824401	SCREW ITXSCM	2	-
17	575841104	SCREW ITXSCM	6	-
18	537088301	GROMMET	1	-
19	577935201	SPIKE	1	-
20	522893901	CHAIN CATCHER	1	-
21	525798103	SCREW ITXSCFT	1	-
22	505125801	DEFLECTION LIMITER	1	-
23	595303003	SNAP LOCKING	1	-
24	588065501	AIR NOZZLE	1	-
25	526818101	SCREW ITXSCM	1	-
26	522620003	TANK CAP ASSY	1	-
27	589241101	GASKET	1	-

Ref.	Article N.	Description	Qty	Kit
28	503578901	HOLDER	1	-
29	525391201	RADIAL SEAL *- up to s/n 20202399999*	2	-
30	525887401	SCREW CITXPANT	1	-
31	575270003	GASKET KIT *A=set of gaskets*	1	-
32	525347601	BUMPER	1	-
33	577386801	CHAIN GUIDE	1	-
34	525887401	SCREW CITXPANT	1	-
35	526221801	SCREW CITXPANT	1	-
36	596911301	PROTECTIVE CAP *-up to s/n 20230403564*	1	-
1	575545215	CRANKSHAFT ASSY *- up to s/n 20202399999*	1	-
2	505133505	BALL BEARING	1	-
3	505133601	CUP	2	-
4	503256302	NEEDLE BEARING	1	-
5	525434204	BALL BEARING	2	-
6	525391201	RADIAL SEAL *- up to s/n 20202399999*	1	-
7	505416101	RADIAL SEAL	1	-
8	575545222	CRANKSHAFT ASSY *s/n from 20202400001 -*	1	-
1	587248702	CYLINDER COVER ASSY -	1	-
2	587149501	LABEL -	1	-
1	574519601	SPARK PLUG	1	-
2	582392701	SCREW	4	-
3	575276901	DECOMPRESSION VALVE	1	-
4	503552201	PLUG	1	-
5	576717602	SLEEVE	4	-
6	510164901	GASKET	1	-
7	575355805	CYLINDER ASSY *up to s/n - 201399999*	1	-
8	584807806	PISTON ASSY *up to s/n - 201399999*	1	-
9	505215701	PISTON RING *up to s/n - 20222500120*	1	-
10	737441000	SNAP RING	2	-
11	503256302	NEEDLE BEARING	1	-

Ref.	Article N.	Description	Qty	Kit
12	575270003	GASKET KIT *A=set of gaskets*	1	-
13	520291101	BUSHING	1	-
14	575355807	CYLINDER ASSY *s/n from 20141400001 -*	1	-
15	529504701	PISTON ASSY *s/n from 20141400001 -*	1	-
16	599998401	PISTON RING *s/n from 20222500121 -*	1	-
1	525887402	SCREW CITXPANT	1	-
2	504106301	HANDLE INSERT	1	-
4	575382205	FUEL TANK ASSY	1	-
5	501152901	TANK VENT ASSY	1	-
6	544099801	THROTTLE LOCKOUT	1	-
7	544099901	SPRING	1	-
8	505157701	THROTTLE	1	-
9	720182520	PARALLEL PIN	1	-
10	521887901	THROTTLE CABLE ASSY	1	-
11	525798102	SCREW ITXSCFT	1	-
12	573993503	FUEL HOSE	1	-
13	503443203	FUEL FILTER *18-40 µm (Blue)*	1	-
14	505165901	COVER *not XPW*	1	-
15	586312103	ANTIVIBRATION ELEMENT	1	-
16	505128702	ANTIVIBRATION ELEMENT	1	-
17	523085501	DEFLECTION LIMITER	1	-
18	501007601	SUPPORT	1	-
19	522620003	TANK CAP ASSY	1	-
20	589241101	GASKET	1	-
21	503578901	HOLDER	1	-
22	525798103	SCREW ITXSCFT	1	-
23	577844301	DECAL	1	-
24	529578202	FUEL HOSE ASSY *From s/n 20161000481- with magnet*	1	-
1	586146304	HANDLE SYSTEM -	1	-
2	525798103	SCREW ITXSCFT -	3	-
3	510097801	CONTACT PLATE -	1	-

Ref.	Article N.	Description	Qty	Kit
4	537252501	CONTACT PLATE -	1	-
5	525887401	SCREW CITXPANT -	1	-
6	505157403	COVER -	1	-
7	525798101	SCREW ITXSCFT -	2	-
8	505129705	ANTIVIBRATION ELEMENT -	1	-
9	505156904	FRONT HANDLE ASSY *incl. 5743863-01*	1	-
11	537088301	GROMMET -	1	-
12	576873004	SPIKE -	1	-
13	575793501	SCREW ITXPANM -	2	-
14	503222401	LOCK NUT -	2	-
15	577976301	SPIKE OUTER -	1	-
16	577976101	SPIKE -	1	-
17	525755103	SCREW ITXSCFM -	1	-
18	537024401	WEAR PROTECTION -	1	-
19	537089201	CHAIN CATCHER -	1	-
20	503222401	LOCK NUT -	1	-
1	576945104	SCREW KIT *Only screws*	1	-
2	525798103	SCREW ITXSCFT -	3	-
3	525798101	SCREW ITXSCFT -	1	-
4	505129705	ANTIVIBRATION ELEMENT -	1	-
5	505156903	FRONT HANDLE ASSY *incl. 5743863-01*	1	-
6	576873004	SPIKE	1	-

Ref.	Article N.	Description	Qty	Kit
		-		
7	575793501	SCREW ITXPANM -	2	-
8	503222401	LOCK NUT -	2	-
9	577976301	SPIKE OUTER *Spike Wrap*	1	-
10	577976101	SPIKE *Spike Wrap*	1	-
11	525755103	SCREW ITXSCFM -	1	-
12	537024401	WEAR PROTECTION -	1	-
13	537089201	CHAIN CATCHER -	1	-
14	503222401	LOCK NUT -	1	-
15	588966401	HANDLE -	1	-
1	575388905	FRONT HANDLE	1	-
2	525798103	SCREW ITXSCFT	2	-
3	525798101	SCREW ITXSCFT	3	-
4	505129705	ANTIVIBRATION ELEMENT	1	-
1	522741901	HANDLE INSERT -	1	-
2	578864601	THERMOSTAT ASSY -	1	-
3	537210801	RETAINER -	1	-
4	522611401	GENERATOR STATOR -	1	-
5	526818102	SCREW ITXSCM -	2	-
6	588168602	FOIL ELEMENT -	1	-
7	575388904	FRONT HANDLE -	1	-
8	525798103	SCREW ITXSCFT -	2	-
9	505157403	COVER -	1	-

Ref.	Article N.	Description	Qty	Kit
10	537252501	CONTACT PLATE -	1	-
11	510097801	CONTACT PLATE -	1	-
12	525887402	SCREW CITXPANT -	1	-
13	504872404	FLYWHEEL ASSY -	1	-
14	503220401	NUT -	1	-
15	503230042	WASHER -	2	-
16	501673501	SPRING -	2	-
17	501673201	PAWL -	2	-
18	506006901	SCREW -	2	-
19	505129705	ANTIVIBRATION ELEMENT -	1	-
20	525798101	SCREW ITXSCFT -	3	-
21	537088301	GROMMET -	1	-
22	582829601	THERMOSTAT ASSY *s/n up to 20164199999*	1	-
1	522795106	IGNITION MODULE ASSY *s/n up to - 20121401172 (14MHz)*	1	-
1	587306701	IGNITION MODULE *s/n from 20121401173 - (8MHz)*	1	-
2	501485404	SPARK PLUG CAP ASSY	1	-
3	525755203	SCREW ITXSCFM	2	-
4	575430601	WIRING ASSY *s/n up to - 20121401172 (14MHz)*	1	-
4	577967601	WIRING ASSY *s/n from 20121401173 - (8MHz)*	1	-
5	505178201	CABLE HOLDER	1	-
6	585321801	NUT	1	-
7	504872403	FLYWHEEL ASSY *XP*	1	-
7	504872404	FLYWHEEL ASSY *XPG*	1	-

Ref.	Article N.	Description	Qty	Kit
8	503230042	WASHER	2	-
9	501673501	SPRING	2	-
10	501673201	PAWL	2	-
11	506006901	SCREW	2	-
12	504043505	CABLE COVER	1	-
13	503238501	SHRINKAGE HOSE	2	-
14	525887401	SCREW CITXPANT	1	-
1	581914802	MUFFLER KIT -	1	-
2	724128759	SCREW CRPANM -	1	-
3	505171301	SPARK ARRESTER -	1	-
4	525825106	SCREW ITXSCM *s/n from 20133400001 -*	2	-
5	577656301	SLEEVE *s/n up to - 20133399999*	2	-
6	581918501	GASKET -	1	-
7	585178701	HEAT DEFLECTOR -	1	-
8	577902201	WASHER *s/n up to - 20133399999*	2	-
9	525762501	SCREW ITXSCM -	2	-
10	575270003	GASKET KIT *A=set of gaskets*	1	-
11	725537655	SCREW IHSCM *s/n up to - 20133399999*	2	-
1	580663714	SHORT BLOCK	1	-
1	505157501	AIR CONDUCTOR -	1	-
2	505159207	STARTER ASSY -	1	-
3	537232501	STARTER HANDLE -	1	-
4	505305125	STARTER ROPE -	1	-
5	576356601	SCREW ITXSCT -	1	-
6	537283201	SLEEVE -	1	-

Ref.	Article N.	Description	Qty	Kit
7	505158101	STARTER PULLEY ASSY -	1	-
8	525887401	SCREW CITXPANT -	2	-
9	598750301	SPRING CASSETTE ASSY -	1	-
10	525824501	SCREW CITXPANMO -	4	-
11	505159102	STARTER HOUSING -	1	-
12	523035606	LABEL *XPG*	1	-
12	523035605	LABEL *XP*	1	-
1	522675001	AIR FILTER ASSY *Nylon Mesh - 80 Micron Rating - Black - s/n up to - 20202600072*	1	-
1	522675002	AIR FILTER ASSY *Nylon Mesh - 44 Micron Rating - Yellow - s/n up to - 20202600072*	1	-
1	522675003	AIR FILTER ASSY *Non-Woven - White - s/n up to - 20202600072*	1	-
1	522675004	AIR FILTER ASSY *Nylon Mesh - 25 Micron Rating - Orange - s/n up to - 20202600072*	1	-
1	590458801	AIR FILTER *Nylon Mesh - 64 Micron Rating - Black - s/n from 20202600073 -*	1	-
1	590458802	AIR FILTER *Nylon Mesh - 25 Micron Rating - Yellow - s/n from 20202600073 -*	1	-
1	590458803	AIR FILTER ASSY *Non-Woven - Clear - s/n from 20202600073 -*	1	-
2	525397906	FILTER HOLDER ASSY *XPG s/n up to - 20202600072*	1	-
2	525397905	FILTER HOLDER ASSY *XP s/n up to - 20202600072*	1	-
2	597275501	FILTER HOLDER ASSY *XP s/n from 20202600073 -*	1	-
2	597275502	FILTER HOLDER ASSY *XPG s/n from 20202600073 -*	1	-
3	505176901	SHACKLE *s/n up to - 20202600072*	1	-
4	510017202	CHOKE CONTROL ASSY	1	-
5	505156201	SCREW	1	-
6	525588101	SEALING	1	-
7	503936601	PURGE	1	-

Ref.	Article N.	Description	Qty	Kit
8	574353503	SCREW ITXSCM	2	-
9	525344303	FUEL HOSE *XP s/n from 20173800688*	1	-
9	589357101	VENTILATING HOSE *s/n up to - 20154799999*	1	-
9	587645404	VENTILATING HOSE *s/n from 20154800001*	1	-
10	579194101	CARBURETTOR *s/n up to - 20121401172 (ZAMA EL44)*	1	-
10	501463307	CARBURETTOR KIT *s/n from 2012401173*	1	-
11	526818101	SCREW ITXSCM	4	-
12	505165202	FLANGE	1	-
13	503226503	SQUARE NUT	2	-
14	583964103	INLET PIPE	1	-
14	583964104	INLET PIPE *Cold resistant*	1	-
15	520290901	INTERMEDIATE WALL	1	-
16	525619201	SEALING	1	-
17	525619001	SEALING	1	-
18	523056801	FUEL HOSE	1	-
20	577536401	WIRING ASSY *s/n from 20121401173 -*	1	-
21	582025101	SUPPORT SLEEVE	1	-
22	598934501	FILTER UNIT *XP*	1	-
22	598934502	FILTER UNIT *XPG*	1	-
23	731231401	HEXAGON NUT *s/n from 20202600073 -*	1	-

FUEL TANK

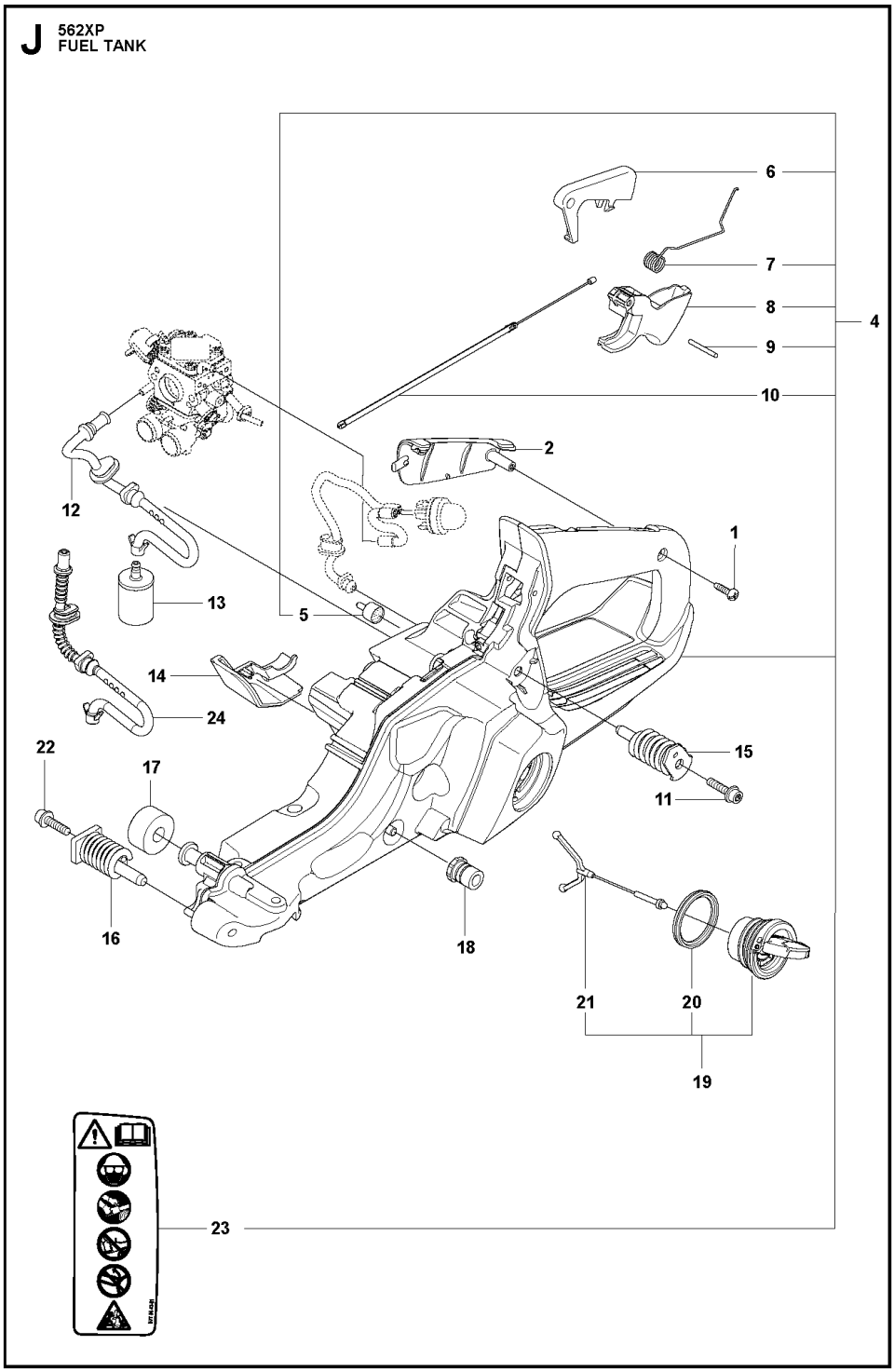

Ref.	Article N.	Description	Qty	Kit
1	575439201	TOOL -	1	-
2	522521101	COMBINATION WRENCH -	1	-
3	503558601	SPANNER -	1	-

Ref.	Article N.	Description	Qty	Kit
4	503558602	SPANNER -	1	-
5	503621201	GREASE -	1	-
6	501911401	GREASE GUN -	1	-
7	583897101	DIAGNOSTIC TOOL KIT -	1	-
8	576183401	CABLE ASSY *Diagnostics cable 14 Mhz*	1	-
9	522986502	WINTER KIT -	1	-
10	505166101	WINTER COVER -	1	-
11	503405901	WINTER PLUG -	1	-
12	503217016	SCREW CCRPANT -	2	-
13	740420100	O-RING -	2	-
14	578125501	WINTER PLUG -	1	-
15	576952201	CABLE ASSY *Diagnostics cable 8 MHz*	1	-
16	503267201	GLUE -	1	-
17	575880701	WRENCH -	1	-
1	579194101	CARBURETTOR *s/n up to - 20121401172 (ZAMA EL44)*	1	-
1	501463307	CARBURETTOR KIT	1	-
4	522517401	DIAPHRAGM	1	-
5	522517501	GASKET	1	-
6	503479701	VALVE	1	-
7	503665901	LEVER	1	-
8	537383401	SPRING	1	-
12	576414201	MAIN NOZZLE	1	-
17	503481801	SCREW	3	-
21	522517801	THROTTLE LEVER	1	-
26	503535701	STRAINER	1	-
27	537383101	DIAPHRAGM PUMP	1	-
28	537403301	DIAPHRAGM	1	-

Ref.	Article N.	Description	Qty	Kit
29	537020101	GASKET	1	-
32	503479001	SCREW	1	-
46	537177001	VALVE	1	-
50	522518901	GASKET KIT *B=set of gaskets*	1	-
51	582025101	SUPPORT SLEEVE	1	-
1	525250602	HAND GUARD -	1	-
2	526834501	SCREW -	2	-
3	577780201	BUSHING -	2	-
4	505197301	NUT -	2	-
5	525743305	CLUTCH COVER ASSY -	1	-
6	503751801	PIN -	1	-
7	526221801	SCREW CITXPANT -	5	-
8	505199301	KNEE JOINT ASSY -	1	-
9	503908301	BRAKE SPRING -	1	-
10	505199502	BRAKE BAND ASSY -	1	-
11	505201601	GUARD -	1	-
12	505199703	COVER -	1	-
14	523058001	LABEL *- up to s/n 20202399999*	1	-
15	575260402	CHAIN TENSIONER KIT -	1	-
16	740480702	O-RING -	1	-
17	503230063	WASHER -	1	-
20	537017401	BEARING SLEEVE -	1	-
22	525388701	CHAIN GUIDE -	1	-

Ref.	Article N.	Description	Qty	Kit
23	575793501	SCREW ITXPANM -	2	-
24	577975201	SPIKE OUTER -	1	-
25	503222401	LOCK NUT -	2	-
1	589809002	CLUTCH ASSY -	1	-
2	580653502	CLUTCH SPRING *s/n from 20133400001 - up to s/n 20164100192*	3	-
2	502164701	CLUTCH SPRING *s/n from 20164100193 -*	1	-
3	575261006	CLUTCH DRUM *- up to s/n 20202200048 3/8 x7*	1	-
3	575261005	CLUTCH DRUM ASSY *- up to s/n 20202200048 .325 x7*	1	-
3	575261010	CLUTCH DRUM ASSY -	1	-
4	501457402	RIM SPROCKET -	1	-
4	501598002	RIM SPROCKET *3/8x7*	1	-
5	503253401	NEEDLE BEARING -	1	-
6	577601101	WORM WHEEL *- up to s/n 20202200048*	1	-
6	586204601	WORM WHEEL *s/n from 20202200049 - 3/8*	1	-
7	505199909	OIL PUMP ASSY -	1	-
8	505200203	PUMP PISTON -	1	-
9	505200301	CASING -	1	-
10	503230060	WASHER -	2	-
11	503891601	SPRING -	1	-
12	505157001	ADJUSTMENT SCREW -	1	-
14	526818102	SCREW ITXSCM -	2	-
15	575847801	OIL HOSE	1	-

Ref.	Article N.	Description	Qty	Kit
		-		
16	504710003	OIL PLUMMET -	1	-
17	720123300	PARALLEL PIN -	2	-
18	503891501	SPRING -	1	-
19	505200101	PUMP CYLINDER -	1	-
20	503624903	SEALING PLUG -	1	-
21	598937706	CLUTCH DRUM ASSY -	1	-
1	588193901	CARBURETTOR AREA BASE	1	-
2	525755202	SCREW ITXSCFM	4	-
3	503869301	SUPPORT	2	-
4	581559201	BELLOWS	1	-
5	575380226	CRANKCASE ASSY	1	-
6	522742901	CHAIN GUIDE PLATE	1	-
7	575793501	SCREW ITXPANM	2	-
8	537403501	FILTER	1	-
9	530026119	CHECK VALVE	1	-
10	537210701	SPRING GUIDE	1	-
11	503436501	POSITION SPRING	1	-
12	505201201	CATCH	1	-
13	503751801	PIN	1	-
14	593806001	GUIDE BUSHING	2	-
15	522893801	BAR BOLT	2	-
16	525824401	SCREW ITXSCM	2	-
17	575841104	SCREW ITXSCM	6	-
18	537088301	GROMMET	1	-
19	577935201	SPIKE	1	-
20	522893901	CHAIN CATCHER	1	-
21	525798103	SCREW ITXSCFT	1	-
22	505125801	DEFLECTION LIMITER	1	-
23	595303003	SNAP LOCKING	1	-
24	588065501	AIR NOZZLE	1	-
25	526818101	SCREW ITXSCM	1	-
26	522620003	TANK CAP ASSY	1	-
27	589241101	GASKET	1	-

Ref.	Article N.	Description	Qty	Kit
28	503578901	HOLDER	1	-
29	525391201	RADIAL SEAL *- up to s/n 20202399999*	2	-
30	525887401	SCREW CITXPANT	1	-
31	575270003	GASKET KIT *A=set of gaskets*	1	-
32	525347601	BUMPER	1	-
33	577386801	CHAIN GUIDE	1	-
34	525887401	SCREW CITXPANT	1	-
35	526221801	SCREW CITXPANT	1	-
36	596911301	PROTECTIVE CAP *-up to s/n 20230403564*	1	-
1	575545215	CRANKSHAFT ASSY *- up to s/n 20202399999*	1	-
2	505133505	BALL BEARING	1	-
3	505133601	CUP	2	-
4	503256302	NEEDLE BEARING	1	-
5	525434204	BALL BEARING	2	-
6	525391201	RADIAL SEAL *- up to s/n 20202399999*	1	-
7	505416101	RADIAL SEAL	1	-
8	575545222	CRANKSHAFT ASSY *s/n from 20202400001 -*	1	-
1	587248702	CYLINDER COVER ASSY -	1	-
2	587149501	LABEL -	1	-
1	574519601	SPARK PLUG	1	-
2	582392701	SCREW	4	-
3	575276901	DECOMPRESSION VALVE	1	-
4	503552201	PLUG	1	-
5	576717602	SLEEVE	4	-
6	510164901	GASKET	1	-
7	575355805	CYLINDER ASSY *up to s/n - 201399999*	1	-
8	584807806	PISTON ASSY *up to s/n - 201399999*	1	-
9	505215701	PISTON RING *up to s/n - 20222500120*	1	-
10	737441000	SNAP RING	2	-
11	503256302	NEEDLE BEARING	1	-

Ref.	Article N.	Description	Qty	Kit
12	575270003	GASKET KIT *A=set of gaskets*	1	-
13	520291101	BUSHING	1	-
14	575355807	CYLINDER ASSY *s/n from 20141400001 -*	1	-
15	529504701	PISTON ASSY *s/n from 20141400001 -*	1	-
16	599998401	PISTON RING *s/n from 20222500121 -*	1	-
1	525887402	SCREW CITXPANT	1	-
2	504106301	HANDLE INSERT	1	-
4	575382205	FUEL TANK ASSY	1	-
5	501152901	TANK VENT ASSY	1	-
6	544099801	THROTTLE LOCKOUT	1	-
7	544099901	SPRING	1	-
8	505157701	THROTTLE	1	-
9	720182520	PARALLEL PIN	1	-
10	521887901	THROTTLE CABLE ASSY	1	-
11	525798102	SCREW ITXSCFT	1	-
12	573993503	FUEL HOSE	1	-
13	503443203	FUEL FILTER *18-40 µm (Blue)*	1	-
14	505165901	COVER *not XPW*	1	-
15	586312103	ANTIVIBRATION ELEMENT	1	-
16	505128702	ANTIVIBRATION ELEMENT	1	-
17	523085501	DEFLECTION LIMITER	1	-
18	501007601	SUPPORT	1	-
19	522620003	TANK CAP ASSY	1	-
20	589241101	GASKET	1	-
21	503578901	HOLDER	1	-
22	525798103	SCREW ITXSCFT	1	-
23	577844301	DECAL	1	-
24	529578202	FUEL HOSE ASSY *From s/n 20161000481- with magnet*	1	-
1	586146304	HANDLE SYSTEM -	1	-
2	525798103	SCREW ITXSCFT -	3	-
3	510097801	CONTACT PLATE -	1	-

Ref.	Article N.	Description	Qty	Kit
4	537252501	CONTACT PLATE -	1	-
5	525887401	SCREW CITXPANT -	1	-
6	505157403	COVER -	1	-
7	525798101	SCREW ITXSCFT -	2	-
8	505129705	ANTIVIBRATION ELEMENT -	1	-
9	505156904	FRONT HANDLE ASSY *incl. 5743863-01*	1	-
11	537088301	GROMMET -	1	-
12	576873004	SPIKE -	1	-
13	575793501	SCREW ITXPANM -	2	-
14	503222401	LOCK NUT -	2	-
15	577976301	SPIKE OUTER -	1	-
16	577976101	SPIKE -	1	-
17	525755103	SCREW ITXSCFM -	1	-
18	537024401	WEAR PROTECTION -	1	-
19	537089201	CHAIN CATCHER -	1	-
20	503222401	LOCK NUT -	1	-
1	576945104	SCREW KIT *Only screws*	1	-
2	525798103	SCREW ITXSCFT -	3	-
3	525798101	SCREW ITXSCFT -	1	-
4	505129705	ANTIVIBRATION ELEMENT -	1	-
5	505156903	FRONT HANDLE ASSY *incl. 5743863-01*	1	-
6	576873004	SPIKE	1	-

Ref.	Article N.	Description	Qty	Kit
		-		
7	575793501	SCREW ITXPANM -	2	-
8	503222401	LOCK NUT -	2	-
9	577976301	SPIKE OUTER *Spike Wrap*	1	-
10	577976101	SPIKE *Spike Wrap*	1	-
11	525755103	SCREW ITXSCFM -	1	-
12	537024401	WEAR PROTECTION -	1	-
13	537089201	CHAIN CATCHER -	1	-
14	503222401	LOCK NUT -	1	-
15	588966401	HANDLE -	1	-
1	575388905	FRONT HANDLE	1	-
2	525798103	SCREW ITXSCFT	2	-
3	525798101	SCREW ITXSCFT	3	-
4	505129705	ANTIVIBRATION ELEMENT	1	-
1	522741901	HANDLE INSERT -	1	-
2	578864601	THERMOSTAT ASSY -	1	-
3	537210801	RETAINER -	1	-
4	522611401	GENERATOR STATOR -	1	-
5	526818102	SCREW ITXSCM -	2	-
6	588168602	FOIL ELEMENT -	1	-
7	575388904	FRONT HANDLE -	1	-
8	525798103	SCREW ITXSCFT -	2	-
9	505157403	COVER -	1	-

Ref.	Article N.	Description	Qty	Kit
10	537252501	CONTACT PLATE -	1	-
11	510097801	CONTACT PLATE -	1	-
12	525887402	SCREW CITXPANT -	1	-
13	504872404	FLYWHEEL ASSY -	1	-
14	503220401	NUT -	1	-
15	503230042	WASHER -	2	-
16	501673501	SPRING -	2	-
17	501673201	PAWL -	2	-
18	506006901	SCREW -	2	-
19	505129705	ANTIVIBRATION ELEMENT -	1	-
20	525798101	SCREW ITXSCFT -	3	-
21	537088301	GROMMET -	1	-
22	582829601	THERMOSTAT ASSY *s/n up to 20164199999*	1	-
1	522795106	IGNITION MODULE ASSY *s/n up to - 20121401172 (14MHz)*	1	-
1	587306701	IGNITION MODULE *s/n from 20121401173 - (8MHz)*	1	-
2	501485404	SPARK PLUG CAP ASSY	1	-
3	525755203	SCREW ITXSCFM	2	-
4	575430601	WIRING ASSY *s/n up to - 20121401172 (14MHz)*	1	-
4	577967601	WIRING ASSY *s/n from 20121401173 - (8MHz)*	1	-
5	505178201	CABLE HOLDER	1	-
6	585321801	NUT	1	-
7	504872403	FLYWHEEL ASSY *XP*	1	-
7	504872404	FLYWHEEL ASSY *XPG*	1	-

Ref.	Article N.	Description	Qty	Kit
8	503230042	WASHER	2	-
9	501673501	SPRING	2	-
10	501673201	PAWL	2	-
11	506006901	SCREW	2	-
12	504043505	CABLE COVER	1	-
13	503238501	SHRINKAGE HOSE	2	-
14	525887401	SCREW CITXPANT	1	-
1	581914802	MUFFLER KIT -	1	-
2	724128759	SCREW CRPANM -	1	-
3	505171301	SPARK ARRESTER -	1	-
4	525825106	SCREW ITXSCM *s/n from 20133400001 -*	2	-
5	577656301	SLEEVE *s/n up to - 20133399999*	2	-
6	581918501	GASKET -	1	-
7	585178701	HEAT DEFLECTOR -	1	-
8	577902201	WASHER *s/n up to - 20133399999*	2	-
9	525762501	SCREW ITXSCM -	2	-
10	575270003	GASKET KIT *A=set of gaskets*	1	-
11	725537655	SCREW IHSCM *s/n up to - 20133399999*	2	-
1	580663714	SHORT BLOCK	1	-
1	505157501	AIR CONDUCTOR -	1	-
2	505159207	STARTER ASSY -	1	-
3	537232501	STARTER HANDLE -	1	-
4	505305125	STARTER ROPE -	1	-
5	576356601	SCREW ITXSCT -	1	-
6	537283201	SLEEVE -	1	-

Ref.	Article N.	Description	Qty	Kit
7	505158101	STARTER PULLEY ASSY -	1	-
8	525887401	SCREW CITXPANT -	2	-
9	598750301	SPRING CASSETTE ASSY -	1	-
10	525824501	SCREW CITXPANMO -	4	-
11	505159102	STARTER HOUSING -	1	-
12	523035606	LABEL *XPG*	1	-
12	523035605	LABEL *XP*	1	-
1	522675001	AIR FILTER ASSY *Nylon Mesh - 80 Micron Rating - Black - s/n up to - 20202600072*	1	-
1	522675002	AIR FILTER ASSY *Nylon Mesh - 44 Micron Rating - Yellow - s/n up to - 20202600072*	1	-
1	522675003	AIR FILTER ASSY *Non-Woven - White - s/n up to - 20202600072*	1	-
1	522675004	AIR FILTER ASSY *Nylon Mesh - 25 Micron Rating - Orange - s/n up to - 20202600072*	1	-
1	590458801	AIR FILTER *Nylon Mesh - 64 Micron Rating - Black - s/n from 20202600073 -*	1	-
1	590458802	AIR FILTER *Nylon Mesh - 25 Micron Rating - Yellow - s/n from 20202600073 -*	1	-
1	590458803	AIR FILTER ASSY *Non-Woven - Clear - s/n from 20202600073 -*	1	-
2	525397906	FILTER HOLDER ASSY *XPG s/n up to - 20202600072*	1	-
2	525397905	FILTER HOLDER ASSY *XP s/n up to - 20202600072*	1	-
2	597275501	FILTER HOLDER ASSY *XP s/n from 20202600073 -*	1	-
2	597275502	FILTER HOLDER ASSY *XPG s/n from 20202600073 -*	1	-
3	505176901	SHACKLE *s/n up to - 20202600072*	1	-
4	510017202	CHOKE CONTROL ASSY	1	-
5	505156201	SCREW	1	-
6	525588101	SEALING	1	-
7	503936601	PURGE	1	-

Ref.	Article N.	Description	Qty	Kit
8	574353503	SCREW ITXSCM	2	-
9	525344303	FUEL HOSE *XP s/n from 20173800688*	1	-
9	589357101	VENTILATING HOSE *s/n up to - 20154799999*	1	-
9	587645404	VENTILATING HOSE *s/n from 20154800001*	1	-
10	579194101	CARBURETTOR *s/n up to - 20121401172 (ZAMA EL44)*	1	-
10	501463307	CARBURETTOR KIT *s/n from 2012401173*	1	-
11	526818101	SCREW ITXSCM	4	-
12	505165202	FLANGE	1	-
13	503226503	SQUARE NUT	2	-
14	583964103	INLET PIPE	1	-
14	583964104	INLET PIPE *Cold resistant*	1	-
15	520290901	INTERMEDIATE WALL	1	-
16	525619201	SEALING	1	-
17	525619001	SEALING	1	-
18	523056801	FUEL HOSE	1	-
20	577536401	WIRING ASSY *s/n from 20121401173 -*	1	-
21	582025101	SUPPORT SLEEVE	1	-
22	598934501	FILTER UNIT *XP*	1	-
22	598934502	FILTER UNIT *XPG*	1	-
23	731231401	HEXAGON NUT *s/n from 20202600073 -*	1	-

HANDLE WRAP HEATED

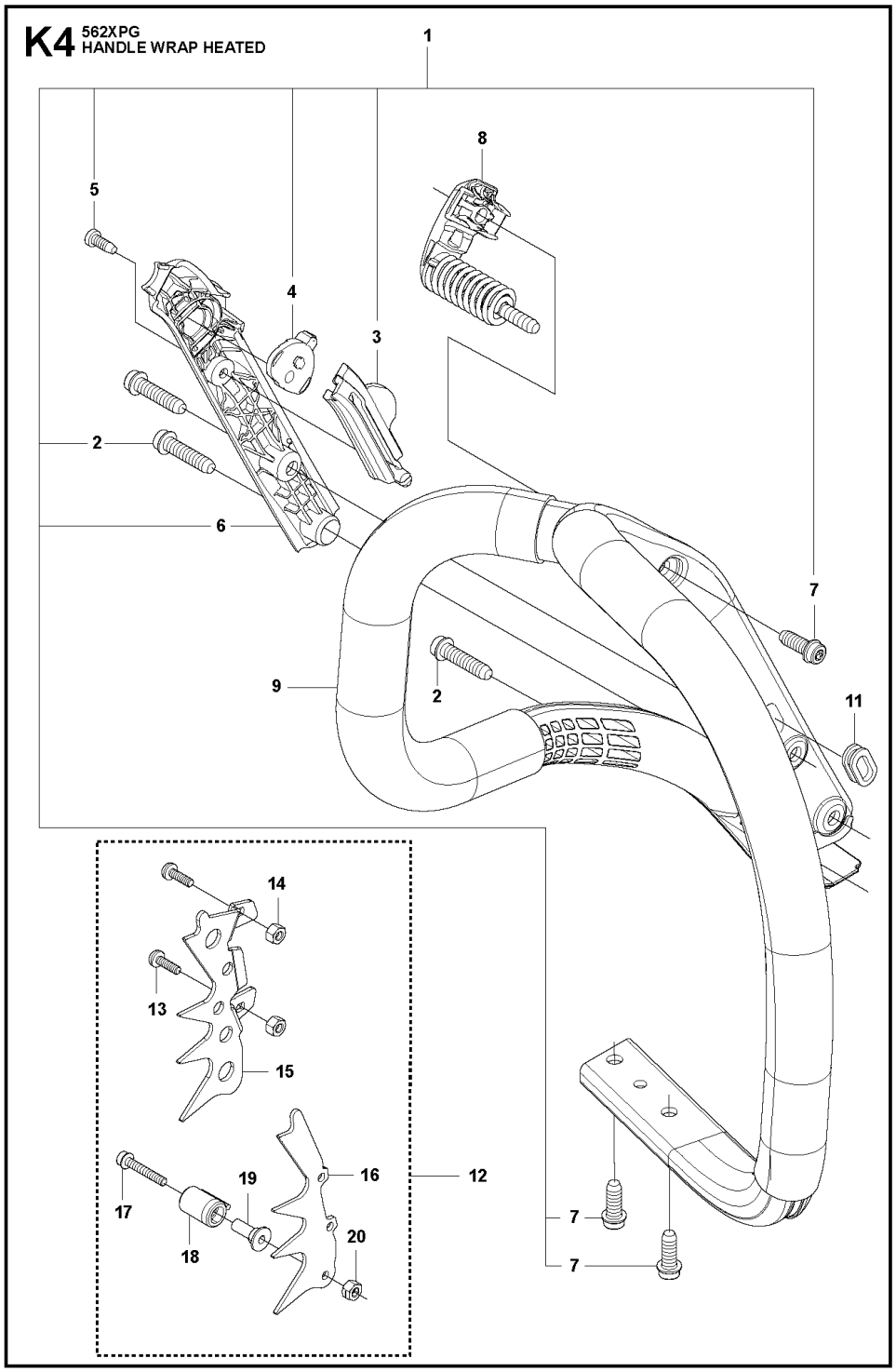

Ref.	Article N.	Description	Qty	Kit
1	575439201	TOOL -	1	-
2	522521101	COMBINATION WRENCH -	1	-
3	503558601	SPANNER -	1	-

Ref.	Article N.	Description	Qty	Kit
4	503558602	SPANNER -	1	-
5	503621201	GREASE -	1	-
6	501911401	GREASE GUN -	1	-
7	583897101	DIAGNOSTIC TOOL KIT -	1	-
8	576183401	CABLE ASSY *Diagnostics cable 14 Mhz*	1	-
9	522986502	WINTER KIT -	1	-
10	505166101	WINTER COVER -	1	-
11	503405901	WINTER PLUG -	1	-
12	503217016	SCREW CCRPANT -	2	-
13	740420100	O-RING -	2	-
14	578125501	WINTER PLUG -	1	-
15	576952201	CABLE ASSY *Diagnostics cable 8 MHz*	1	-
16	503267201	GLUE -	1	-
17	575880701	WRENCH -	1	-
1	579194101	CARBURETTOR *s/n up to - 20121401172 (ZAMA EL44)*	1	-
1	501463307	CARBURETTOR KIT	1	-
4	522517401	DIAPHRAGM	1	-
5	522517501	GASKET	1	-
6	503479701	VALVE	1	-
7	503665901	LEVER	1	-
8	537383401	SPRING	1	-
12	576414201	MAIN NOZZLE	1	-
17	503481801	SCREW	3	-
21	522517801	THROTTLE LEVER	1	-
26	503535701	STRAINER	1	-
27	537383101	DIAPHRAGM PUMP	1	-
28	537403301	DIAPHRAGM	1	-

Ref.	Article N.	Description	Qty	Kit
29	537020101	GASKET	1	-
32	503479001	SCREW	1	-
46	537177001	VALVE	1	-
50	522518901	GASKET KIT *B=set of gaskets*	1	-
51	582025101	SUPPORT SLEEVE	1	-
1	525250602	HAND GUARD -	1	-
2	526834501	SCREW -	2	-
3	577780201	BUSHING -	2	-
4	505197301	NUT -	2	-
5	525743305	CLUTCH COVER ASSY -	1	-
6	503751801	PIN -	1	-
7	526221801	SCREW CITXPANT -	5	-
8	505199301	KNEE JOINT ASSY -	1	-
9	503908301	BRAKE SPRING -	1	-
10	505199502	BRAKE BAND ASSY -	1	-
11	505201601	GUARD -	1	-
12	505199703	COVER -	1	-
14	523058001	LABEL *- up to s/n 20202399999*	1	-
15	575260402	CHAIN TENSIONER KIT -	1	-
16	740480702	O-RING -	1	-
17	503230063	WASHER -	1	-
20	537017401	BEARING SLEEVE -	1	-
22	525388701	CHAIN GUIDE -	1	-

Ref.	Article N.	Description	Qty	Kit
23	575793501	SCREW ITXPANM -	2	-
24	577975201	SPIKE OUTER -	1	-
25	503222401	LOCK NUT -	2	-
1	589809002	CLUTCH ASSY -	1	-
2	580653502	CLUTCH SPRING *s/n from 20133400001 - up to s/n 20164100192*	3	-
2	502164701	CLUTCH SPRING *s/n from 20164100193 -*	1	-
3	575261006	CLUTCH DRUM *- up to s/n 20202200048 3/8 x7*	1	-
3	575261005	CLUTCH DRUM ASSY *- up to s/n 20202200048 .325 x7*	1	-
3	575261010	CLUTCH DRUM ASSY -	1	-
4	501457402	RIM SPROCKET -	1	-
4	501598002	RIM SPROCKET *3/8x7*	1	-
5	503253401	NEEDLE BEARING -	1	-
6	577601101	WORM WHEEL *- up to s/n 20202200048*	1	-
6	586204601	WORM WHEEL *s/n from 20202200049 - 3/8*	1	-
7	505199909	OIL PUMP ASSY -	1	-
8	505200203	PUMP PISTON -	1	-
9	505200301	CASING -	1	-
10	503230060	WASHER -	2	-
11	503891601	SPRING -	1	-
12	505157001	ADJUSTMENT SCREW -	1	-
14	526818102	SCREW ITXSCM -	2	-
15	575847801	OIL HOSE	1	-

Ref.	Article N.	Description	Qty	Kit
		-		
16	504710003	OIL PLUMMET -	1	-
17	720123300	PARALLEL PIN -	2	-
18	503891501	SPRING -	1	-
19	505200101	PUMP CYLINDER -	1	-
20	503624903	SEALING PLUG -	1	-
21	598937706	CLUTCH DRUM ASSY -	1	-
1	588193901	CARBURETTOR AREA BASE	1	-
2	525755202	SCREW ITXSCFM	4	-
3	503869301	SUPPORT	2	-
4	581559201	BELLOWS	1	-
5	575380226	CRANKCASE ASSY	1	-
6	522742901	CHAIN GUIDE PLATE	1	-
7	575793501	SCREW ITXPANM	2	-
8	537403501	FILTER	1	-
9	530026119	CHECK VALVE	1	-
10	537210701	SPRING GUIDE	1	-
11	503436501	POSITION SPRING	1	-
12	505201201	CATCH	1	-
13	503751801	PIN	1	-
14	593806001	GUIDE BUSHING	2	-
15	522893801	BAR BOLT	2	-
16	525824401	SCREW ITXSCM	2	-
17	575841104	SCREW ITXSCM	6	-
18	537088301	GROMMET	1	-
19	577935201	SPIKE	1	-
20	522893901	CHAIN CATCHER	1	-
21	525798103	SCREW ITXSCFT	1	-
22	505125801	DEFLECTION LIMITER	1	-
23	595303003	SNAP LOCKING	1	-
24	588065501	AIR NOZZLE	1	-
25	526818101	SCREW ITXSCM	1	-
26	522620003	TANK CAP ASSY	1	-
27	589241101	GASKET	1	-

Ref.	Article N.	Description	Qty	Kit
28	503578901	HOLDER	1	-
29	525391201	RADIAL SEAL *- up to s/n 20202399999*	2	-
30	525887401	SCREW CITXPANT	1	-
31	575270003	GASKET KIT *A=set of gaskets*	1	-
32	525347601	BUMPER	1	-
33	577386801	CHAIN GUIDE	1	-
34	525887401	SCREW CITXPANT	1	-
35	526221801	SCREW CITXPANT	1	-
36	596911301	PROTECTIVE CAP *-up to s/n 20230403564*	1	-
1	575545215	CRANKSHAFT ASSY *- up to s/n 20202399999*	1	-
2	505133505	BALL BEARING	1	-
3	505133601	CUP	2	-
4	503256302	NEEDLE BEARING	1	-
5	525434204	BALL BEARING	2	-
6	525391201	RADIAL SEAL *- up to s/n 20202399999*	1	-
7	505416101	RADIAL SEAL	1	-
8	575545222	CRANKSHAFT ASSY *s/n from 20202400001 -*	1	-
1	587248702	CYLINDER COVER ASSY -	1	-
2	587149501	LABEL -	1	-
1	574519601	SPARK PLUG	1	-
2	582392701	SCREW	4	-
3	575276901	DECOMPRESSION VALVE	1	-
4	503552201	PLUG	1	-
5	576717602	SLEEVE	4	-
6	510164901	GASKET	1	-
7	575355805	CYLINDER ASSY *up to s/n - 201399999*	1	-
8	584807806	PISTON ASSY *up to s/n - 201399999*	1	-
9	505215701	PISTON RING *up to s/n - 20222500120*	1	-
10	737441000	SNAP RING	2	-
11	503256302	NEEDLE BEARING	1	-

Ref.	Article N.	Description	Qty	Kit
12	575270003	GASKET KIT *A=set of gaskets*	1	-
13	520291101	BUSHING	1	-
14	575355807	CYLINDER ASSY *s/n from 20141400001 -*	1	-
15	529504701	PISTON ASSY *s/n from 20141400001 -*	1	-
16	599998401	PISTON RING *s/n from 20222500121 -*	1	-
1	525887402	SCREW CITXPANT	1	-
2	504106301	HANDLE INSERT	1	-
4	575382205	FUEL TANK ASSY	1	-
5	501152901	TANK VENT ASSY	1	-
6	544099801	THROTTLE LOCKOUT	1	-
7	544099901	SPRING	1	-
8	505157701	THROTTLE	1	-
9	720182520	PARALLEL PIN	1	-
10	521887901	THROTTLE CABLE ASSY	1	-
11	525798102	SCREW ITXSCFT	1	-
12	573993503	FUEL HOSE	1	-
13	503443203	FUEL FILTER *18-40 µm (Blue)*	1	-
14	505165901	COVER *not XPW*	1	-
15	586312103	ANTIVIBRATION ELEMENT	1	-
16	505128702	ANTIVIBRATION ELEMENT	1	-
17	523085501	DEFLECTION LIMITER	1	-
18	501007601	SUPPORT	1	-
19	522620003	TANK CAP ASSY	1	-
20	589241101	GASKET	1	-
21	503578901	HOLDER	1	-
22	525798103	SCREW ITXSCFT	1	-
23	577844301	DECAL	1	-
24	529578202	FUEL HOSE ASSY *From s/n 20161000481- with magnet*	1	-
1	586146304	HANDLE SYSTEM -	1	-
2	525798103	SCREW ITXSCFT -	3	-
3	510097801	CONTACT PLATE -	1	-

Ref.	Article N.	Description	Qty	Kit
4	537252501	CONTACT PLATE -	1	-
5	525887401	SCREW CITXPANT -	1	-
6	505157403	COVER -	1	-
7	525798101	SCREW ITXSCFT -	2	-
8	505129705	ANTIVIBRATION ELEMENT -	1	-
9	505156904	FRONT HANDLE ASSY *incl. 5743863-01*	1	-
11	537088301	GROMMET -	1	-
12	576873004	SPIKE -	1	-
13	575793501	SCREW ITXPANM -	2	-
14	503222401	LOCK NUT -	2	-
15	577976301	SPIKE OUTER -	1	-
16	577976101	SPIKE -	1	-
17	525755103	SCREW ITXSCFM -	1	-
18	537024401	WEAR PROTECTION -	1	-
19	537089201	CHAIN CATCHER -	1	-
20	503222401	LOCK NUT -	1	-
1	576945104	SCREW KIT *Only screws*	1	-
2	525798103	SCREW ITXSCFT -	3	-
3	525798101	SCREW ITXSCFT -	1	-
4	505129705	ANTIVIBRATION ELEMENT -	1	-
5	505156903	FRONT HANDLE ASSY *incl. 5743863-01*	1	-
6	576873004	SPIKE	1	-

Ref.	Article N.	Description	Qty	Kit
		-		
7	575793501	SCREW ITXPANM -	2	-
8	503222401	LOCK NUT -	2	-
9	577976301	SPIKE OUTER *Spike Wrap*	1	-
10	577976101	SPIKE *Spike Wrap*	1	-
11	525755103	SCREW ITXSCFM -	1	-
12	537024401	WEAR PROTECTION -	1	-
13	537089201	CHAIN CATCHER -	1	-
14	503222401	LOCK NUT -	1	-
15	588966401	HANDLE -	1	-
1	575388905	FRONT HANDLE	1	-
2	525798103	SCREW ITXSCFT	2	-
3	525798101	SCREW ITXSCFT	3	-
4	505129705	ANTIVIBRATION ELEMENT	1	-
1	522741901	HANDLE INSERT -	1	-
2	578864601	THERMOSTAT ASSY -	1	-
3	537210801	RETAINER -	1	-
4	522611401	GENERATOR STATOR -	1	-
5	526818102	SCREW ITXSCM -	2	-
6	588168602	FOIL ELEMENT -	1	-
7	575388904	FRONT HANDLE -	1	-
8	525798103	SCREW ITXSCFT -	2	-
9	505157403	COVER -	1	-

Ref.	Article N.	Description	Qty	Kit
10	537252501	CONTACT PLATE -	1	-
11	510097801	CONTACT PLATE -	1	-
12	525887402	SCREW CITXPANT -	1	-
13	504872404	FLYWHEEL ASSY -	1	-
14	503220401	NUT -	1	-
15	503230042	WASHER -	2	-
16	501673501	SPRING -	2	-
17	501673201	PAWL -	2	-
18	506006901	SCREW -	2	-
19	505129705	ANTIVIBRATION ELEMENT -	1	-
20	525798101	SCREW ITXSCFT -	3	-
21	537088301	GROMMET -	1	-
22	582829601	THERMOSTAT ASSY *s/n up to 20164199999*	1	-
1	522795106	IGNITION MODULE ASSY *s/n up to - 20121401172 (14MHz)*	1	-
1	587306701	IGNITION MODULE *s/n from 20121401173 - (8MHz)*	1	-
2	501485404	SPARK PLUG CAP ASSY	1	-
3	525755203	SCREW ITXSCFM	2	-
4	575430601	WIRING ASSY *s/n up to - 20121401172 (14MHz)*	1	-
4	577967601	WIRING ASSY *s/n from 20121401173 - (8MHz)*	1	-
5	505178201	CABLE HOLDER	1	-
6	585321801	NUT	1	-
7	504872403	FLYWHEEL ASSY *XP*	1	-
7	504872404	FLYWHEEL ASSY *XPG*	1	-

Ref.	Article N.	Description	Qty	Kit
8	503230042	WASHER	2	-
9	501673501	SPRING	2	-
10	501673201	PAWL	2	-
11	506006901	SCREW	2	-
12	504043505	CABLE COVER	1	-
13	503238501	SHRINKAGE HOSE	2	-
14	525887401	SCREW CITXPANT	1	-
1	581914802	MUFFLER KIT -	1	-
2	724128759	SCREW CRPANM -	1	-
3	505171301	SPARK ARRESTER -	1	-
4	525825106	SCREW ITXSCM *s/n from 20133400001 -*	2	-
5	577656301	SLEEVE *s/n up to - 20133399999*	2	-
6	581918501	GASKET -	1	-
7	585178701	HEAT DEFLECTOR -	1	-
8	577902201	WASHER *s/n up to - 20133399999*	2	-
9	525762501	SCREW ITXSCM -	2	-
10	575270003	GASKET KIT *A=set of gaskets*	1	-
11	725537655	SCREW IHSCM *s/n up to - 20133399999*	2	-
1	580663714	SHORT BLOCK	1	-
1	505157501	AIR CONDUCTOR -	1	-
2	505159207	STARTER ASSY -	1	-
3	537232501	STARTER HANDLE -	1	-
4	505305125	STARTER ROPE -	1	-
5	576356601	SCREW ITXSCT -	1	-
6	537283201	SLEEVE -	1	-

Ref.	Article N.	Description	Qty	Kit
7	505158101	STARTER PULLEY ASSY -	1	-
8	525887401	SCREW CITXPANT -	2	-
9	598750301	SPRING CASSETTE ASSY -	1	-
10	525824501	SCREW CITXPANMO -	4	-
11	505159102	STARTER HOUSING -	1	-
12	523035606	LABEL *XPG*	1	-
12	523035605	LABEL *XP*	1	-
1	522675001	AIR FILTER ASSY *Nylon Mesh - 80 Micron Rating - Black - s/n up to - 20202600072*	1	-
1	522675002	AIR FILTER ASSY *Nylon Mesh - 44 Micron Rating - Yellow - s/n up to - 20202600072*	1	-
1	522675003	AIR FILTER ASSY *Non-Woven - White - s/n up to - 20202600072*	1	-
1	522675004	AIR FILTER ASSY *Nylon Mesh - 25 Micron Rating - Orange - s/n up to - 20202600072*	1	-
1	590458801	AIR FILTER *Nylon Mesh - 64 Micron Rating - Black - s/n from 20202600073 -*	1	-
1	590458802	AIR FILTER *Nylon Mesh - 25 Micron Rating - Yellow - s/n from 20202600073 -*	1	-
1	590458803	AIR FILTER ASSY *Non-Woven - Clear - s/n from 20202600073 -*	1	-
2	525397906	FILTER HOLDER ASSY *XPG s/n up to - 20202600072*	1	-
2	525397905	FILTER HOLDER ASSY *XP s/n up to - 20202600072*	1	-
2	597275501	FILTER HOLDER ASSY *XP s/n from 20202600073 -*	1	-
2	597275502	FILTER HOLDER ASSY *XPG s/n from 20202600073 -*	1	-
3	505176901	SHACKLE *s/n up to - 20202600072*	1	-
4	510017202	CHOKE CONTROL ASSY	1	-
5	505156201	SCREW	1	-
6	525588101	SEALING	1	-
7	503936601	PURGE	1	-

Ref.	Article N.	Description	Qty	Kit
8	574353503	SCREW ITXSCM	2	-
9	525344303	FUEL HOSE *XP s/n from 20173800688*	1	-
9	589357101	VENTILATING HOSE *s/n up to - 20154799999*	1	-
9	587645404	VENTILATING HOSE *s/n from 20154800001*	1	-
10	579194101	CARBURETTOR *s/n up to - 20121401172 (ZAMA EL44)*	1	-
10	501463307	CARBURETTOR KIT *s/n from 2012401173*	1	-
11	526818101	SCREW ITXSCM	4	-
12	505165202	FLANGE	1	-
13	503226503	SQUARE NUT	2	-
14	583964103	INLET PIPE	1	-
14	583964104	INLET PIPE *Cold resistant*	1	-
15	520290901	INTERMEDIATE WALL	1	-
16	525619201	SEALING	1	-
17	525619001	SEALING	1	-
18	523056801	FUEL HOSE	1	-
20	577536401	WIRING ASSY *s/n from 20121401173 -*	1	-
21	582025101	SUPPORT SLEEVE	1	-
22	598934501	FILTER UNIT *XP*	1	-
22	598934502	FILTER UNIT *XPG*	1	-
23	731231401	HEXAGON NUT *s/n from 20202600073 -*	1	-

HANDLE WRAP

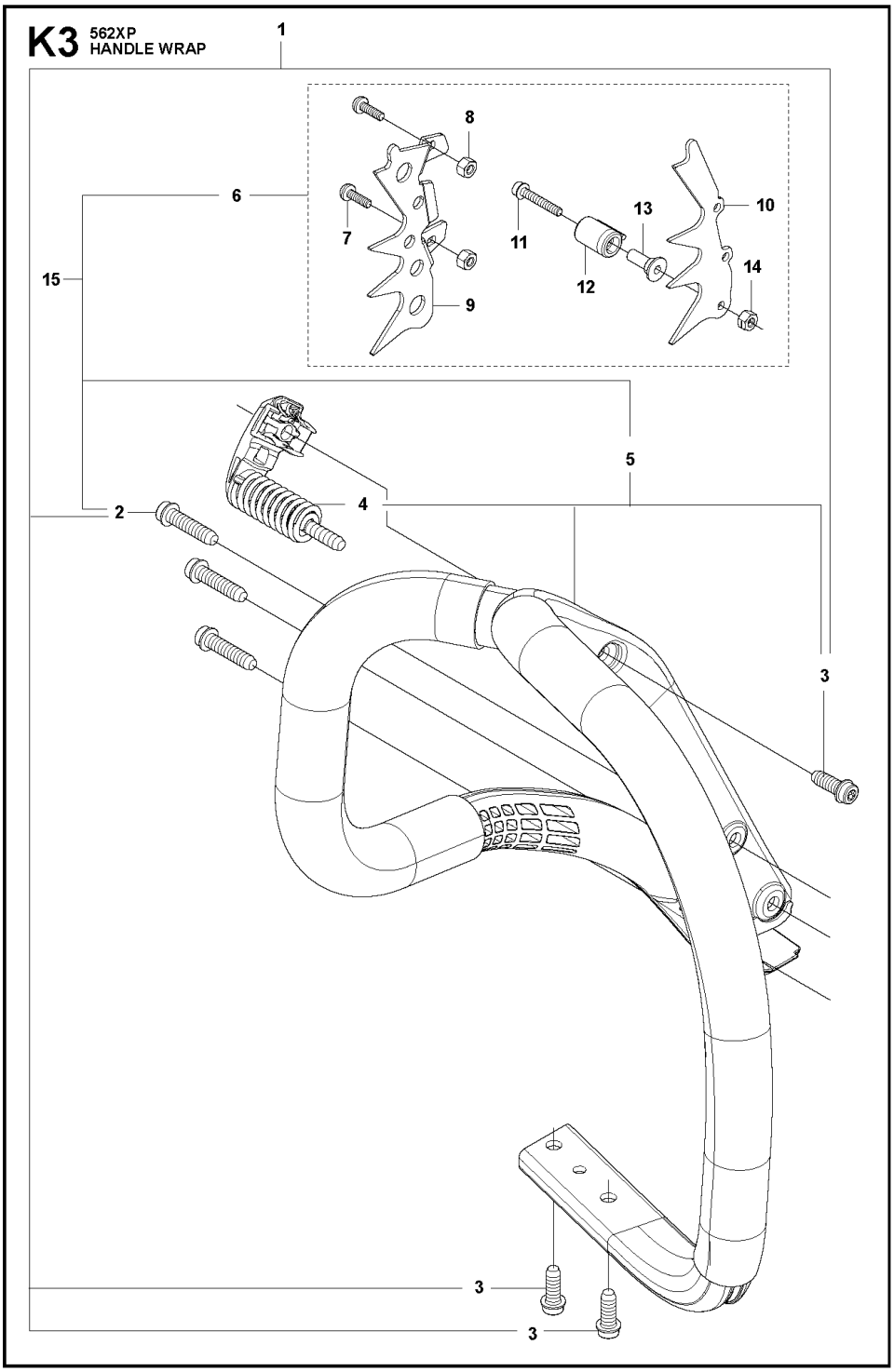

Ref.	Article N.	Description	Qty	Kit
1	575439201	TOOL -	1	-
2	522521101	COMBINATION WRENCH -	1	-
3	503558601	SPANNER -	1	-

Ref.	Article N.	Description	Qty	Kit
4	503558602	SPANNER -	1	-
5	503621201	GREASE -	1	-
6	501911401	GREASE GUN -	1	-
7	583897101	DIAGNOSTIC TOOL KIT -	1	-
8	576183401	CABLE ASSY *Diagnostics cable 14 Mhz*	1	-
9	522986502	WINTER KIT -	1	-
10	505166101	WINTER COVER -	1	-
11	503405901	WINTER PLUG -	1	-
12	503217016	SCREW CCRPANT -	2	-
13	740420100	O-RING -	2	-
14	578125501	WINTER PLUG -	1	-
15	576952201	CABLE ASSY *Diagnostics cable 8 MHz*	1	-
16	503267201	GLUE -	1	-
17	575880701	WRENCH -	1	-
1	579194101	CARBURETTOR *s/n up to - 20121401172 (ZAMA EL44)*	1	-
1	501463307	CARBURETTOR KIT	1	-
4	522517401	DIAPHRAGM	1	-
5	522517501	GASKET	1	-
6	503479701	VALVE	1	-
7	503665901	LEVER	1	-
8	537383401	SPRING	1	-
12	576414201	MAIN NOZZLE	1	-
17	503481801	SCREW	3	-
21	522517801	THROTTLE LEVER	1	-
26	503535701	STRAINER	1	-
27	537383101	DIAPHRAGM PUMP	1	-
28	537403301	DIAPHRAGM	1	-

Ref.	Article N.	Description	Qty	Kit
29	537020101	GASKET	1	-
32	503479001	SCREW	1	-
46	537177001	VALVE	1	-
50	522518901	GASKET KIT *B=set of gaskets*	1	-
51	582025101	SUPPORT SLEEVE	1	-
1	525250602	HAND GUARD -	1	-
2	526834501	SCREW -	2	-
3	577780201	BUSHING -	2	-
4	505197301	NUT -	2	-
5	525743305	CLUTCH COVER ASSY -	1	-
6	503751801	PIN -	1	-
7	526221801	SCREW CITXPANT -	5	-
8	505199301	KNEE JOINT ASSY -	1	-
9	503908301	BRAKE SPRING -	1	-
10	505199502	BRAKE BAND ASSY -	1	-
11	505201601	GUARD -	1	-
12	505199703	COVER -	1	-
14	523058001	LABEL *- up to s/n 20202399999*	1	-
15	575260402	CHAIN TENSIONER KIT -	1	-
16	740480702	O-RING -	1	-
17	503230063	WASHER -	1	-
20	537017401	BEARING SLEEVE -	1	-
22	525388701	CHAIN GUIDE -	1	-

Ref.	Article N.	Description	Qty	Kit
23	575793501	SCREW ITXPANM -	2	-
24	577975201	SPIKE OUTER -	1	-
25	503222401	LOCK NUT -	2	-
1	589809002	CLUTCH ASSY -	1	-
2	580653502	CLUTCH SPRING *s/n from 20133400001 - up to s/n 20164100192*	3	-
2	502164701	CLUTCH SPRING *s/n from 20164100193 -*	1	-
3	575261006	CLUTCH DRUM *- up to s/n 20202200048 3/8 x7*	1	-
3	575261005	CLUTCH DRUM ASSY *- up to s/n 20202200048 .325 x7*	1	-
3	575261010	CLUTCH DRUM ASSY -	1	-
4	501457402	RIM SPROCKET -	1	-
4	501598002	RIM SPROCKET *3/8x7*	1	-
5	503253401	NEEDLE BEARING -	1	-
6	577601101	WORM WHEEL *- up to s/n 20202200048*	1	-
6	586204601	WORM WHEEL *s/n from 20202200049 - 3/8*	1	-
7	505199909	OIL PUMP ASSY -	1	-
8	505200203	PUMP PISTON -	1	-
9	505200301	CASING -	1	-
10	503230060	WASHER -	2	-
11	503891601	SPRING -	1	-
12	505157001	ADJUSTMENT SCREW -	1	-
14	526818102	SCREW ITXSCM -	2	-
15	575847801	OIL HOSE	1	-

Ref.	Article N.	Description	Qty	Kit
		-		
16	504710003	OIL PLUMMET -	1	-
17	720123300	PARALLEL PIN -	2	-
18	503891501	SPRING -	1	-
19	505200101	PUMP CYLINDER -	1	-
20	503624903	SEALING PLUG -	1	-
21	598937706	CLUTCH DRUM ASSY -	1	-
1	588193901	CARBURETTOR AREA BASE	1	-
2	525755202	SCREW ITXSCFM	4	-
3	503869301	SUPPORT	2	-
4	581559201	BELLOWS	1	-
5	575380226	CRANKCASE ASSY	1	-
6	522742901	CHAIN GUIDE PLATE	1	-
7	575793501	SCREW ITXPANM	2	-
8	537403501	FILTER	1	-
9	530026119	CHECK VALVE	1	-
10	537210701	SPRING GUIDE	1	-
11	503436501	POSITION SPRING	1	-
12	505201201	CATCH	1	-
13	503751801	PIN	1	-
14	593806001	GUIDE BUSHING	2	-
15	522893801	BAR BOLT	2	-
16	525824401	SCREW ITXSCM	2	-
17	575841104	SCREW ITXSCM	6	-
18	537088301	GROMMET	1	-
19	577935201	SPIKE	1	-
20	522893901	CHAIN CATCHER	1	-
21	525798103	SCREW ITXSCFT	1	-
22	505125801	DEFLECTION LIMITER	1	-
23	595303003	SNAP LOCKING	1	-
24	588065501	AIR NOZZLE	1	-
25	526818101	SCREW ITXSCM	1	-
26	522620003	TANK CAP ASSY	1	-
27	589241101	GASKET	1	-

Ref.	Article N.	Description	Qty	Kit
28	503578901	HOLDER	1	-
29	525391201	RADIAL SEAL *- up to s/n 20202399999*	2	-
30	525887401	SCREW CITXPANT	1	-
31	575270003	GASKET KIT *A=set of gaskets*	1	-
32	525347601	BUMPER	1	-
33	577386801	CHAIN GUIDE	1	-
34	525887401	SCREW CITXPANT	1	-
35	526221801	SCREW CITXPANT	1	-
36	596911301	PROTECTIVE CAP *-up to s/n 20230403564*	1	-
1	575545215	CRANKSHAFT ASSY *- up to s/n 20202399999*	1	-
2	505133505	BALL BEARING	1	-
3	505133601	CUP	2	-
4	503256302	NEEDLE BEARING	1	-
5	525434204	BALL BEARING	2	-
6	525391201	RADIAL SEAL *- up to s/n 20202399999*	1	-
7	505416101	RADIAL SEAL	1	-
8	575545222	CRANKSHAFT ASSY *s/n from 20202400001 -*	1	-
1	587248702	CYLINDER COVER ASSY -	1	-
2	587149501	LABEL -	1	-
1	574519601	SPARK PLUG	1	-
2	582392701	SCREW	4	-
3	575276901	DECOMPRESSION VALVE	1	-
4	503552201	PLUG	1	-
5	576717602	SLEEVE	4	-
6	510164901	GASKET	1	-
7	575355805	CYLINDER ASSY *up to s/n - 201399999*	1	-
8	584807806	PISTON ASSY *up to s/n - 201399999*	1	-
9	505215701	PISTON RING *up to s/n - 20222500120*	1	-
10	737441000	SNAP RING	2	-
11	503256302	NEEDLE BEARING	1	-

Ref.	Article N.	Description	Qty	Kit
12	575270003	GASKET KIT *A=set of gaskets*	1	-
13	520291101	BUSHING	1	-
14	575355807	CYLINDER ASSY *s/n from 20141400001 -*	1	-
15	529504701	PISTON ASSY *s/n from 20141400001 -*	1	-
16	599998401	PISTON RING *s/n from 20222500121 -*	1	-
1	525887402	SCREW CITXPANT	1	-
2	504106301	HANDLE INSERT	1	-
4	575382205	FUEL TANK ASSY	1	-
5	501152901	TANK VENT ASSY	1	-
6	544099801	THROTTLE LOCKOUT	1	-
7	544099901	SPRING	1	-
8	505157701	THROTTLE	1	-
9	720182520	PARALLEL PIN	1	-
10	521887901	THROTTLE CABLE ASSY	1	-
11	525798102	SCREW ITXSCFT	1	-
12	573993503	FUEL HOSE	1	-
13	503443203	FUEL FILTER *18-40 µm (Blue)*	1	-
14	505165901	COVER *not XPW*	1	-
15	586312103	ANTIVIBRATION ELEMENT	1	-
16	505128702	ANTIVIBRATION ELEMENT	1	-
17	523085501	DEFLECTION LIMITER	1	-
18	501007601	SUPPORT	1	-
19	522620003	TANK CAP ASSY	1	-
20	589241101	GASKET	1	-
21	503578901	HOLDER	1	-
22	525798103	SCREW ITXSCFT	1	-
23	577844301	DECAL	1	-
24	529578202	FUEL HOSE ASSY *From s/n 20161000481- with magnet*	1	-
1	586146304	HANDLE SYSTEM -	1	-
2	525798103	SCREW ITXSCFT -	3	-
3	510097801	CONTACT PLATE -	1	-

Ref.	Article N.	Description	Qty	Kit
4	537252501	CONTACT PLATE -	1	-
5	525887401	SCREW CITXPANT -	1	-
6	505157403	COVER -	1	-
7	525798101	SCREW ITXSCFT -	2	-
8	505129705	ANTIVIBRATION ELEMENT -	1	-
9	505156904	FRONT HANDLE ASSY *incl. 5743863-01*	1	-
11	537088301	GROMMET -	1	-
12	576873004	SPIKE -	1	-
13	575793501	SCREW ITXPANM -	2	-
14	503222401	LOCK NUT -	2	-
15	577976301	SPIKE OUTER -	1	-
16	577976101	SPIKE -	1	-
17	525755103	SCREW ITXSCFM -	1	-
18	537024401	WEAR PROTECTION -	1	-
19	537089201	CHAIN CATCHER -	1	-
20	503222401	LOCK NUT -	1	-
1	576945104	SCREW KIT *Only screws*	1	-
2	525798103	SCREW ITXSCFT -	3	-
3	525798101	SCREW ITXSCFT -	1	-
4	505129705	ANTIVIBRATION ELEMENT -	1	-
5	505156903	FRONT HANDLE ASSY *incl. 5743863-01*	1	-
6	576873004	SPIKE	1	-

Ref.	Article N.	Description	Qty	Kit
		-		
7	575793501	SCREW ITXPANM -	2	-
8	503222401	LOCK NUT -	2	-
9	577976301	SPIKE OUTER *Spike Wrap*	1	-
10	577976101	SPIKE *Spike Wrap*	1	-
11	525755103	SCREW ITXSCFM -	1	-
12	537024401	WEAR PROTECTION -	1	-
13	537089201	CHAIN CATCHER -	1	-
14	503222401	LOCK NUT -	1	-
15	588966401	HANDLE -	1	-
1	575388905	FRONT HANDLE	1	-
2	525798103	SCREW ITXSCFT	2	-
3	525798101	SCREW ITXSCFT	3	-
4	505129705	ANTIVIBRATION ELEMENT	1	-
1	522741901	HANDLE INSERT -	1	-
2	578864601	THERMOSTAT ASSY -	1	-
3	537210801	RETAINER -	1	-
4	522611401	GENERATOR STATOR -	1	-
5	526818102	SCREW ITXSCM -	2	-
6	588168602	FOIL ELEMENT -	1	-
7	575388904	FRONT HANDLE -	1	-
8	525798103	SCREW ITXSCFT -	2	-
9	505157403	COVER -	1	-

Ref.	Article N.	Description	Qty	Kit
10	537252501	CONTACT PLATE -	1	-
11	510097801	CONTACT PLATE -	1	-
12	525887402	SCREW CITXPANT -	1	-
13	504872404	FLYWHEEL ASSY -	1	-
14	503220401	NUT -	1	-
15	503230042	WASHER -	2	-
16	501673501	SPRING -	2	-
17	501673201	PAWL -	2	-
18	506006901	SCREW -	2	-
19	505129705	ANTIVIBRATION ELEMENT -	1	-
20	525798101	SCREW ITXSCFT -	3	-
21	537088301	GROMMET -	1	-
22	582829601	THERMOSTAT ASSY *s/n up to 20164199999*	1	-
1	522795106	IGNITION MODULE ASSY *s/n up to - 20121401172 (14MHz)*	1	-
1	587306701	IGNITION MODULE *s/n from 20121401173 - (8MHz)*	1	-
2	501485404	SPARK PLUG CAP ASSY	1	-
3	525755203	SCREW ITXSCFM	2	-
4	575430601	WIRING ASSY *s/n up to - 20121401172 (14MHz)*	1	-
4	577967601	WIRING ASSY *s/n from 20121401173 - (8MHz)*	1	-
5	505178201	CABLE HOLDER	1	-
6	585321801	NUT	1	-
7	504872403	FLYWHEEL ASSY *XP*	1	-
7	504872404	FLYWHEEL ASSY *XPG*	1	-

Ref.	Article N.	Description	Qty	Kit
8	503230042	WASHER	2	-
9	501673501	SPRING	2	-
10	501673201	PAWL	2	-
11	506006901	SCREW	2	-
12	504043505	CABLE COVER	1	-
13	503238501	SHRINKAGE HOSE	2	-
14	525887401	SCREW CITXPANT	1	-
1	581914802	MUFFLER KIT -	1	-
2	724128759	SCREW CRPANM -	1	-
3	505171301	SPARK ARRESTER -	1	-
4	525825106	SCREW ITXSCM *s/n from 20133400001 -*	2	-
5	577656301	SLEEVE *s/n up to - 20133399999*	2	-
6	581918501	GASKET -	1	-
7	585178701	HEAT DEFLECTOR -	1	-
8	577902201	WASHER *s/n up to - 20133399999*	2	-
9	525762501	SCREW ITXSCM -	2	-
10	575270003	GASKET KIT *A=set of gaskets*	1	-
11	725537655	SCREW IHSCM *s/n up to - 20133399999*	2	-
1	580663714	SHORT BLOCK	1	-
1	505157501	AIR CONDUCTOR -	1	-
2	505159207	STARTER ASSY -	1	-
3	537232501	STARTER HANDLE -	1	-
4	505305125	STARTER ROPE -	1	-
5	576356601	SCREW ITXSCT -	1	-
6	537283201	SLEEVE -	1	-

Ref.	Article N.	Description	Qty	Kit
7	505158101	STARTER PULLEY ASSY -	1	-
8	525887401	SCREW CITXPANT -	2	-
9	598750301	SPRING CASSETTE ASSY -	1	-
10	525824501	SCREW CITXPANMO -	4	-
11	505159102	STARTER HOUSING -	1	-
12	523035606	LABEL *XPG*	1	-
12	523035605	LABEL *XP*	1	-
1	522675001	AIR FILTER ASSY *Nylon Mesh - 80 Micron Rating - Black - s/n up to - 20202600072*	1	-
1	522675002	AIR FILTER ASSY *Nylon Mesh - 44 Micron Rating - Yellow - s/n up to - 20202600072*	1	-
1	522675003	AIR FILTER ASSY *Non-Woven - White - s/n up to - 20202600072*	1	-
1	522675004	AIR FILTER ASSY *Nylon Mesh - 25 Micron Rating - Orange - s/n up to - 20202600072*	1	-
1	590458801	AIR FILTER *Nylon Mesh - 64 Micron Rating - Black - s/n from 20202600073 -*	1	-
1	590458802	AIR FILTER *Nylon Mesh - 25 Micron Rating - Yellow - s/n from 20202600073 -*	1	-
1	590458803	AIR FILTER ASSY *Non-Woven - Clear - s/n from 20202600073 -*	1	-
2	525397906	FILTER HOLDER ASSY *XPG s/n up to - 20202600072*	1	-
2	525397905	FILTER HOLDER ASSY *XP s/n up to - 20202600072*	1	-
2	597275501	FILTER HOLDER ASSY *XP s/n from 20202600073 -*	1	-
2	597275502	FILTER HOLDER ASSY *XPG s/n from 20202600073 -*	1	-
3	505176901	SHACKLE *s/n up to - 20202600072*	1	-
4	510017202	CHOKE CONTROL ASSY	1	-
5	505156201	SCREW	1	-
6	525588101	SEALING	1	-
7	503936601	PURGE	1	-

Ref.	Article N.	Description	Qty	Kit
8	574353503	SCREW ITXSCM	2	-
9	525344303	FUEL HOSE *XP s/n from 20173800688*	1	-
9	589357101	VENTILATING HOSE *s/n up to - 20154799999*	1	-
9	587645404	VENTILATING HOSE *s/n from 20154800001*	1	-
10	579194101	CARBURETTOR *s/n up to - 20121401172 (ZAMA EL44)*	1	-
10	501463307	CARBURETTOR KIT *s/n from 2012401173*	1	-
11	526818101	SCREW ITXSCM	4	-
12	505165202	FLANGE	1	-
13	503226503	SQUARE NUT	2	-
14	583964103	INLET PIPE	1	-
14	583964104	INLET PIPE *Cold resistant*	1	-
15	520290901	INTERMEDIATE WALL	1	-
16	525619201	SEALING	1	-
17	525619001	SEALING	1	-
18	523056801	FUEL HOSE	1	-
20	577536401	WIRING ASSY *s/n from 20121401173 -*	1	-
21	582025101	SUPPORT SLEEVE	1	-
22	598934501	FILTER UNIT *XP*	1	-
22	598934502	FILTER UNIT *XPG*	1	-
23	731231401	HEXAGON NUT *s/n from 20202600073 -*	1	-

HANDLE

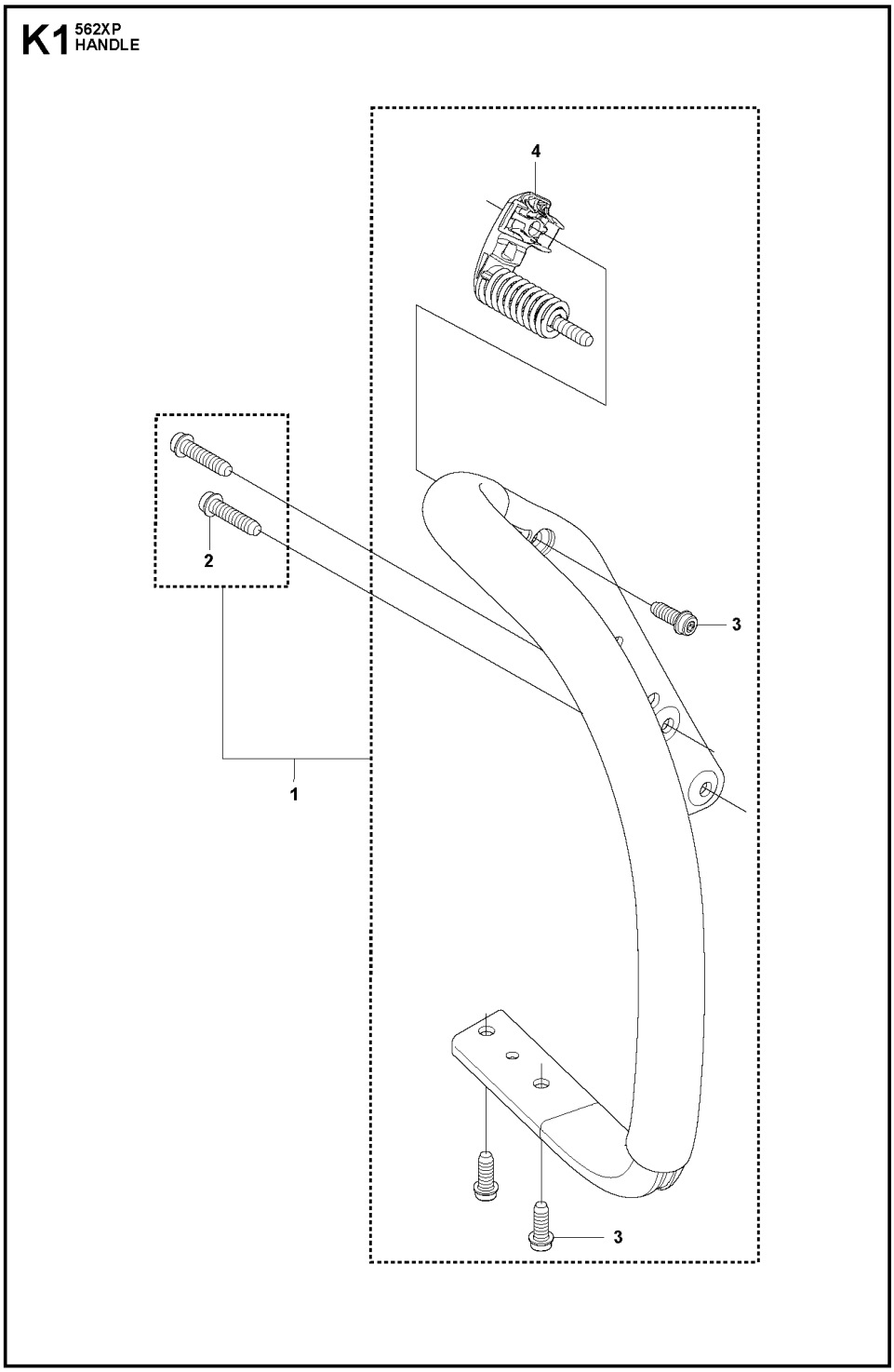

Ref.	Article N.	Description	Qty	Kit
1	575439201	TOOL -	1	-
2	522521101	COMBINATION WRENCH -	1	-
3	503558601	SPANNER -	1	-

Ref.	Article N.	Description	Qty	Kit
4	503558602	SPANNER -	1	-
5	503621201	GREASE -	1	-
6	501911401	GREASE GUN -	1	-
7	583897101	DIAGNOSTIC TOOL KIT -	1	-
8	576183401	CABLE ASSY *Diagnostics cable 14 Mhz*	1	-
9	522986502	WINTER KIT -	1	-
10	505166101	WINTER COVER -	1	-
11	503405901	WINTER PLUG -	1	-
12	503217016	SCREW CCRPANT -	2	-
13	740420100	O-RING -	2	-
14	578125501	WINTER PLUG -	1	-
15	576952201	CABLE ASSY *Diagnostics cable 8 MHz*	1	-
16	503267201	GLUE -	1	-
17	575880701	WRENCH -	1	-
1	579194101	CARBURETTOR *s/n up to - 20121401172 (ZAMA EL44)*	1	-
1	501463307	CARBURETTOR KIT	1	-
4	522517401	DIAPHRAGM	1	-
5	522517501	GASKET	1	-
6	503479701	VALVE	1	-
7	503665901	LEVER	1	-
8	537383401	SPRING	1	-
12	576414201	MAIN NOZZLE	1	-
17	503481801	SCREW	3	-
21	522517801	THROTTLE LEVER	1	-
26	503535701	STRAINER	1	-
27	537383101	DIAPHRAGM PUMP	1	-
28	537403301	DIAPHRAGM	1	-

Ref.	Article N.	Description	Qty	Kit
29	537020101	GASKET	1	-
32	503479001	SCREW	1	-
46	537177001	VALVE	1	-
50	522518901	GASKET KIT *B=set of gaskets*	1	-
51	582025101	SUPPORT SLEEVE	1	-
1	525250602	HAND GUARD -	1	-
2	526834501	SCREW -	2	-
3	577780201	BUSHING -	2	-
4	505197301	NUT -	2	-
5	525743305	CLUTCH COVER ASSY -	1	-
6	503751801	PIN -	1	-
7	526221801	SCREW CITXPANT -	5	-
8	505199301	KNEE JOINT ASSY -	1	-
9	503908301	BRAKE SPRING -	1	-
10	505199502	BRAKE BAND ASSY -	1	-
11	505201601	GUARD -	1	-
12	505199703	COVER -	1	-
14	523058001	LABEL *- up to s/n 20202399999*	1	-
15	575260402	CHAIN TENSIONER KIT -	1	-
16	740480702	O-RING -	1	-
17	503230063	WASHER -	1	-
20	537017401	BEARING SLEEVE -	1	-
22	525388701	CHAIN GUIDE -	1	-

Ref.	Article N.	Description	Qty	Kit
23	575793501	SCREW ITXPANM -	2	-
24	577975201	SPIKE OUTER -	1	-
25	503222401	LOCK NUT -	2	-
1	589809002	CLUTCH ASSY -	1	-
2	580653502	CLUTCH SPRING *s/n from 20133400001 - up to s/n 20164100192*	3	-
2	502164701	CLUTCH SPRING *s/n from 20164100193 -*	1	-
3	575261006	CLUTCH DRUM *- up to s/n 20202200048 3/8 x7*	1	-
3	575261005	CLUTCH DRUM ASSY *- up to s/n 20202200048 .325 x7*	1	-
3	575261010	CLUTCH DRUM ASSY -	1	-
4	501457402	RIM SPROCKET -	1	-
4	501598002	RIM SPROCKET *3/8x7*	1	-
5	503253401	NEEDLE BEARING -	1	-
6	577601101	WORM WHEEL *- up to s/n 20202200048*	1	-
6	586204601	WORM WHEEL *s/n from 20202200049 - 3/8*	1	-
7	505199909	OIL PUMP ASSY -	1	-
8	505200203	PUMP PISTON -	1	-
9	505200301	CASING -	1	-
10	503230060	WASHER -	2	-
11	503891601	SPRING -	1	-
12	505157001	ADJUSTMENT SCREW -	1	-
14	526818102	SCREW ITXSCM -	2	-
15	575847801	OIL HOSE	1	-

Ref.	Article N.	Description	Qty	Kit
		-		
16	504710003	OIL PLUMMET -	1	-
17	720123300	PARALLEL PIN -	2	-
18	503891501	SPRING -	1	-
19	505200101	PUMP CYLINDER -	1	-
20	503624903	SEALING PLUG -	1	-
21	598937706	CLUTCH DRUM ASSY -	1	-
1	588193901	CARBURETTOR AREA BASE	1	-
2	525755202	SCREW ITXSCFM	4	-
3	503869301	SUPPORT	2	-
4	581559201	BELLOWS	1	-
5	575380226	CRANKCASE ASSY	1	-
6	522742901	CHAIN GUIDE PLATE	1	-
7	575793501	SCREW ITXPANM	2	-
8	537403501	FILTER	1	-
9	530026119	CHECK VALVE	1	-
10	537210701	SPRING GUIDE	1	-
11	503436501	POSITION SPRING	1	-
12	505201201	CATCH	1	-
13	503751801	PIN	1	-
14	593806001	GUIDE BUSHING	2	-
15	522893801	BAR BOLT	2	-
16	525824401	SCREW ITXSCM	2	-
17	575841104	SCREW ITXSCM	6	-
18	537088301	GROMMET	1	-
19	577935201	SPIKE	1	-
20	522893901	CHAIN CATCHER	1	-
21	525798103	SCREW ITXSCFT	1	-
22	505125801	DEFLECTION LIMITER	1	-
23	595303003	SNAP LOCKING	1	-
24	588065501	AIR NOZZLE	1	-
25	526818101	SCREW ITXSCM	1	-
26	522620003	TANK CAP ASSY	1	-
27	589241101	GASKET	1	-

Ref.	Article N.	Description	Qty	Kit
28	503578901	HOLDER	1	-
29	525391201	RADIAL SEAL *- up to s/n 20202399999*	2	-
30	525887401	SCREW CITXPANT	1	-
31	575270003	GASKET KIT *A=set of gaskets*	1	-
32	525347601	BUMPER	1	-
33	577386801	CHAIN GUIDE	1	-
34	525887401	SCREW CITXPANT	1	-
35	526221801	SCREW CITXPANT	1	-
36	596911301	PROTECTIVE CAP *-up to s/n 20230403564*	1	-
1	575545215	CRANKSHAFT ASSY *- up to s/n 20202399999*	1	-
2	505133505	BALL BEARING	1	-
3	505133601	CUP	2	-
4	503256302	NEEDLE BEARING	1	-
5	525434204	BALL BEARING	2	-
6	525391201	RADIAL SEAL *- up to s/n 20202399999*	1	-
7	505416101	RADIAL SEAL	1	-
8	575545222	CRANKSHAFT ASSY *s/n from 20202400001 -*	1	-
1	587248702	CYLINDER COVER ASSY -	1	-
2	587149501	LABEL -	1	-
1	574519601	SPARK PLUG	1	-
2	582392701	SCREW	4	-
3	575276901	DECOMPRESSION VALVE	1	-
4	503552201	PLUG	1	-
5	576717602	SLEEVE	4	-
6	510164901	GASKET	1	-
7	575355805	CYLINDER ASSY *up to s/n - 201399999*	1	-
8	584807806	PISTON ASSY *up to s/n - 201399999*	1	-
9	505215701	PISTON RING *up to s/n - 20222500120*	1	-
10	737441000	SNAP RING	2	-
11	503256302	NEEDLE BEARING	1	-

Ref.	Article N.	Description	Qty	Kit
12	575270003	GASKET KIT *A=set of gaskets*	1	-
13	520291101	BUSHING	1	-
14	575355807	CYLINDER ASSY *s/n from 20141400001 -*	1	-
15	529504701	PISTON ASSY *s/n from 20141400001 -*	1	-
16	599998401	PISTON RING *s/n from 20222500121 -*	1	-
1	525887402	SCREW CITXPANT	1	-
2	504106301	HANDLE INSERT	1	-
4	575382205	FUEL TANK ASSY	1	-
5	501152901	TANK VENT ASSY	1	-
6	544099801	THROTTLE LOCKOUT	1	-
7	544099901	SPRING	1	-
8	505157701	THROTTLE	1	-
9	720182520	PARALLEL PIN	1	-
10	521887901	THROTTLE CABLE ASSY	1	-
11	525798102	SCREW ITXSCFT	1	-
12	573993503	FUEL HOSE	1	-
13	503443203	FUEL FILTER *18-40 µm (Blue)*	1	-
14	505165901	COVER *not XPW*	1	-
15	586312103	ANTIVIBRATION ELEMENT	1	-
16	505128702	ANTIVIBRATION ELEMENT	1	-
17	523085501	DEFLECTION LIMITER	1	-
18	501007601	SUPPORT	1	-
19	522620003	TANK CAP ASSY	1	-
20	589241101	GASKET	1	-
21	503578901	HOLDER	1	-
22	525798103	SCREW ITXSCFT	1	-
23	577844301	DECAL	1	-
24	529578202	FUEL HOSE ASSY *From s/n 20161000481- with magnet*	1	-
1	586146304	HANDLE SYSTEM -	1	-
2	525798103	SCREW ITXSCFT -	3	-
3	510097801	CONTACT PLATE -	1	-

Ref.	Article N.	Description	Qty	Kit
4	537252501	CONTACT PLATE -	1	-
5	525887401	SCREW CITXPANT -	1	-
6	505157403	COVER -	1	-
7	525798101	SCREW ITXSCFT -	2	-
8	505129705	ANTIVIBRATION ELEMENT -	1	-
9	505156904	FRONT HANDLE ASSY *incl. 5743863-01*	1	-
11	537088301	GROMMET -	1	-
12	576873004	SPIKE -	1	-
13	575793501	SCREW ITXPANM -	2	-
14	503222401	LOCK NUT -	2	-
15	577976301	SPIKE OUTER -	1	-
16	577976101	SPIKE -	1	-
17	525755103	SCREW ITXSCFM -	1	-
18	537024401	WEAR PROTECTION -	1	-
19	537089201	CHAIN CATCHER -	1	-
20	503222401	LOCK NUT -	1	-
1	576945104	SCREW KIT *Only screws*	1	-
2	525798103	SCREW ITXSCFT -	3	-
3	525798101	SCREW ITXSCFT -	1	-
4	505129705	ANTIVIBRATION ELEMENT -	1	-
5	505156903	FRONT HANDLE ASSY *incl. 5743863-01*	1	-
6	576873004	SPIKE	1	-

Ref.	Article N.	Description	Qty	Kit
		-		
7	575793501	SCREW ITXPANM -	2	-
8	503222401	LOCK NUT -	2	-
9	577976301	SPIKE OUTER *Spike Wrap*	1	-
10	577976101	SPIKE *Spike Wrap*	1	-
11	525755103	SCREW ITXSCFM -	1	-
12	537024401	WEAR PROTECTION -	1	-
13	537089201	CHAIN CATCHER -	1	-
14	503222401	LOCK NUT -	1	-
15	588966401	HANDLE -	1	-
1	575388905	FRONT HANDLE	1	-
2	525798103	SCREW ITXSCFT	2	-
3	525798101	SCREW ITXSCFT	3	-
4	505129705	ANTIVIBRATION ELEMENT	1	-
1	522741901	HANDLE INSERT -	1	-
2	578864601	THERMOSTAT ASSY -	1	-
3	537210801	RETAINER -	1	-
4	522611401	GENERATOR STATOR -	1	-
5	526818102	SCREW ITXSCM -	2	-
6	588168602	FOIL ELEMENT -	1	-
7	575388904	FRONT HANDLE -	1	-
8	525798103	SCREW ITXSCFT -	2	-
9	505157403	COVER -	1	-

Ref.	Article N.	Description	Qty	Kit
10	537252501	CONTACT PLATE -	1	-
11	510097801	CONTACT PLATE -	1	-
12	525887402	SCREW CITXPANT -	1	-
13	504872404	FLYWHEEL ASSY -	1	-
14	503220401	NUT -	1	-
15	503230042	WASHER -	2	-
16	501673501	SPRING -	2	-
17	501673201	PAWL -	2	-
18	506006901	SCREW -	2	-
19	505129705	ANTIVIBRATION ELEMENT -	1	-
20	525798101	SCREW ITXSCFT -	3	-
21	537088301	GROMMET -	1	-
22	582829601	THERMOSTAT ASSY *s/n up to 20164199999*	1	-
1	522795106	IGNITION MODULE ASSY *s/n up to - 20121401172 (14MHz)*	1	-
1	587306701	IGNITION MODULE *s/n from 20121401173 - (8MHz)*	1	-
2	501485404	SPARK PLUG CAP ASSY	1	-
3	525755203	SCREW ITXSCFM	2	-
4	575430601	WIRING ASSY *s/n up to - 20121401172 (14MHz)*	1	-
4	577967601	WIRING ASSY *s/n from 20121401173 - (8MHz)*	1	-
5	505178201	CABLE HOLDER	1	-
6	585321801	NUT	1	-
7	504872403	FLYWHEEL ASSY *XP*	1	-
7	504872404	FLYWHEEL ASSY *XPG*	1	-

Ref.	Article N.	Description	Qty	Kit
8	503230042	WASHER	2	-
9	501673501	SPRING	2	-
10	501673201	PAWL	2	-
11	506006901	SCREW	2	-
12	504043505	CABLE COVER	1	-
13	503238501	SHRINKAGE HOSE	2	-
14	525887401	SCREW CITXPANT	1	-
1	581914802	MUFFLER KIT -	1	-
2	724128759	SCREW CRPANM -	1	-
3	505171301	SPARK ARRESTER -	1	-
4	525825106	SCREW ITXSCM *s/n from 20133400001 -*	2	-
5	577656301	SLEEVE *s/n up to - 20133399999*	2	-
6	581918501	GASKET -	1	-
7	585178701	HEAT DEFLECTOR -	1	-
8	577902201	WASHER *s/n up to - 20133399999*	2	-
9	525762501	SCREW ITXSCM -	2	-
10	575270003	GASKET KIT *A=set of gaskets*	1	-
11	725537655	SCREW IHSCM *s/n up to - 20133399999*	2	-
1	580663714	SHORT BLOCK	1	-
1	505157501	AIR CONDUCTOR -	1	-
2	505159207	STARTER ASSY -	1	-
3	537232501	STARTER HANDLE -	1	-
4	505305125	STARTER ROPE -	1	-
5	576356601	SCREW ITXSCT -	1	-
6	537283201	SLEEVE -	1	-

Ref.	Article N.	Description	Qty	Kit
7	505158101	STARTER PULLEY ASSY -	1	-
8	525887401	SCREW CITXPANT -	2	-
9	598750301	SPRING CASSETTE ASSY -	1	-
10	525824501	SCREW CITXPANMO -	4	-
11	505159102	STARTER HOUSING -	1	-
12	523035606	LABEL *XPG*	1	-
12	523035605	LABEL *XP*	1	-
1	522675001	AIR FILTER ASSY *Nylon Mesh - 80 Micron Rating - Black - s/n up to - 20202600072*	1	-
1	522675002	AIR FILTER ASSY *Nylon Mesh - 44 Micron Rating - Yellow - s/n up to - 20202600072*	1	-
1	522675003	AIR FILTER ASSY *Non-Woven - White - s/n up to - 20202600072*	1	-
1	522675004	AIR FILTER ASSY *Nylon Mesh - 25 Micron Rating - Orange - s/n up to - 20202600072*	1	-
1	590458801	AIR FILTER *Nylon Mesh - 64 Micron Rating - Black - s/n from 20202600073 -*	1	-
1	590458802	AIR FILTER *Nylon Mesh - 25 Micron Rating - Yellow - s/n from 20202600073 -*	1	-
1	590458803	AIR FILTER ASSY *Non-Woven - Clear - s/n from 20202600073 -*	1	-
2	525397906	FILTER HOLDER ASSY *XPG s/n up to - 20202600072*	1	-
2	525397905	FILTER HOLDER ASSY *XP s/n up to - 20202600072*	1	-
2	597275501	FILTER HOLDER ASSY *XP s/n from 20202600073 -*	1	-
2	597275502	FILTER HOLDER ASSY *XPG s/n from 20202600073 -*	1	-
3	505176901	SHACKLE *s/n up to - 20202600072*	1	-
4	510017202	CHOKE CONTROL ASSY	1	-
5	505156201	SCREW	1	-
6	525588101	SEALING	1	-
7	503936601	PURGE	1	-

Ref.	Article N.	Description	Qty	Kit
8	574353503	SCREW ITXSCM	2	-
9	525344303	FUEL HOSE *XP s/n from 20173800688*	1	-
9	589357101	VENTILATING HOSE *s/n up to - 20154799999*	1	-
9	587645404	VENTILATING HOSE *s/n from 20154800001*	1	-
10	579194101	CARBURETTOR *s/n up to - 20121401172 (ZAMA EL44)*	1	-
10	501463307	CARBURETTOR KIT *s/n from 2012401173*	1	-
11	526818101	SCREW ITXSCM	4	-
12	505165202	FLANGE	1	-
13	503226503	SQUARE NUT	2	-
14	583964103	INLET PIPE	1	-
14	583964104	INLET PIPE *Cold resistant*	1	-
15	520290901	INTERMEDIATE WALL	1	-
16	525619201	SEALING	1	-
17	525619001	SEALING	1	-
18	523056801	FUEL HOSE	1	-
20	577536401	WIRING ASSY *s/n from 20121401173 -*	1	-
21	582025101	SUPPORT SLEEVE	1	-
22	598934501	FILTER UNIT *XP*	1	-
22	598934502	FILTER UNIT *XPG*	1	-
23	731231401	HEXAGON NUT *s/n from 20202600073 -*	1	-

HEATED HANDLE

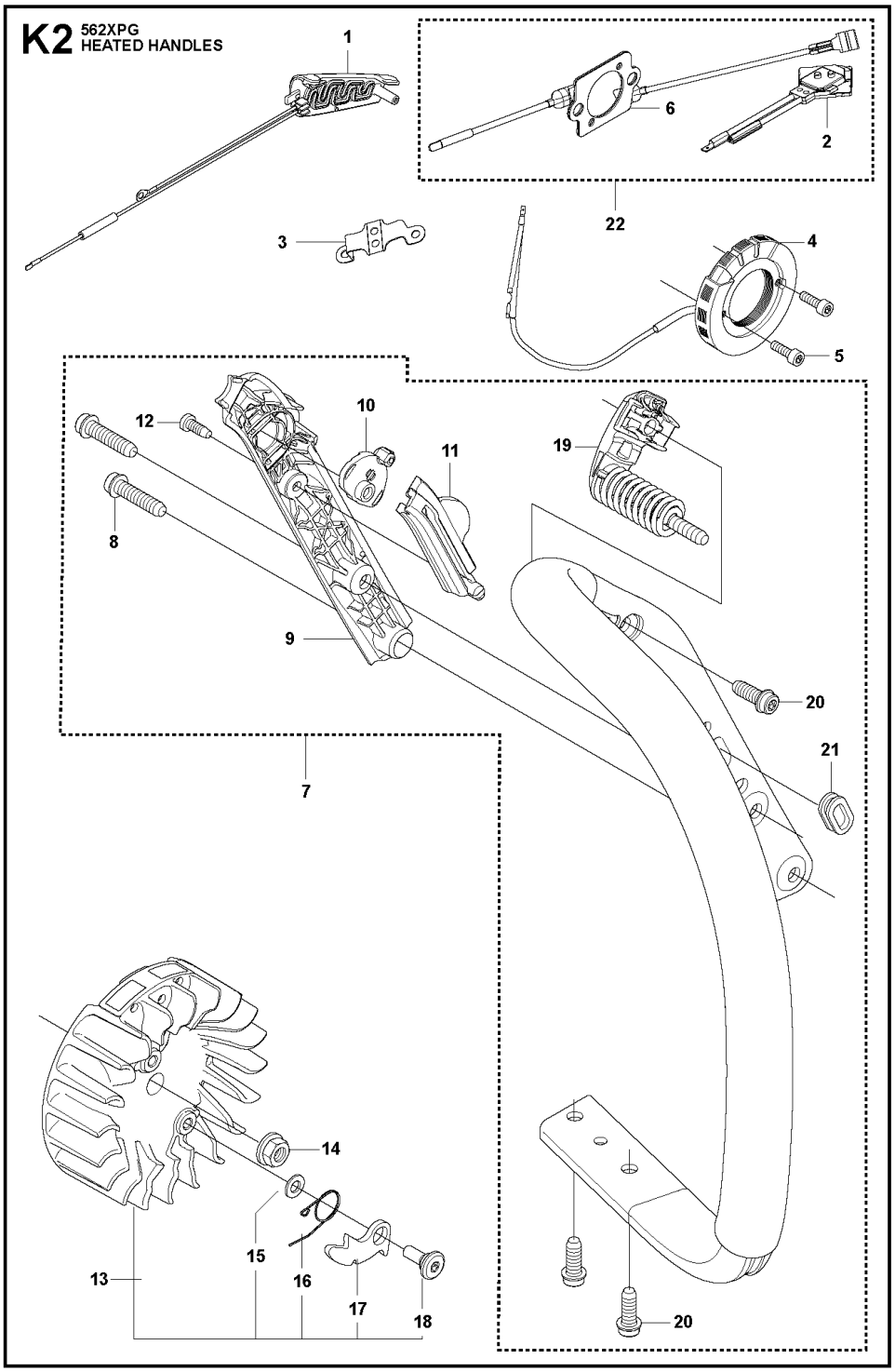

Ref.	Article N.	Description	Qty	Kit
1	575439201	TOOL -	1	-
2	522521101	COMBINATION WRENCH -	1	-
3	503558601	SPANNER -	1	-

Ref.	Article N.	Description	Qty	Kit
4	503558602	SPANNER -	1	-
5	503621201	GREASE -	1	-
6	501911401	GREASE GUN -	1	-
7	583897101	DIAGNOSTIC TOOL KIT -	1	-
8	576183401	CABLE ASSY *Diagnostics cable 14 Mhz*	1	-
9	522986502	WINTER KIT -	1	-
10	505166101	WINTER COVER -	1	-
11	503405901	WINTER PLUG -	1	-
12	503217016	SCREW CCRPANT -	2	-
13	740420100	O-RING -	2	-
14	578125501	WINTER PLUG -	1	-
15	576952201	CABLE ASSY *Diagnostics cable 8 MHz*	1	-
16	503267201	GLUE -	1	-
17	575880701	WRENCH -	1	-
1	579194101	CARBURETTOR *s/n up to - 20121401172 (ZAMA EL44)*	1	-
1	501463307	CARBURETTOR KIT	1	-
4	522517401	DIAPHRAGM	1	-
5	522517501	GASKET	1	-
6	503479701	VALVE	1	-
7	503665901	LEVER	1	-
8	537383401	SPRING	1	-
12	576414201	MAIN NOZZLE	1	-
17	503481801	SCREW	3	-
21	522517801	THROTTLE LEVER	1	-
26	503535701	STRAINER	1	-
27	537383101	DIAPHRAGM PUMP	1	-
28	537403301	DIAPHRAGM	1	-

Ref.	Article N.	Description	Qty	Kit
29	537020101	GASKET	1	-
32	503479001	SCREW	1	-
46	537177001	VALVE	1	-
50	522518901	GASKET KIT *B=set of gaskets*	1	-
51	582025101	SUPPORT SLEEVE	1	-
1	525250602	HAND GUARD -	1	-
2	526834501	SCREW -	2	-
3	577780201	BUSHING -	2	-
4	505197301	NUT -	2	-
5	525743305	CLUTCH COVER ASSY -	1	-
6	503751801	PIN -	1	-
7	526221801	SCREW CITXPANT -	5	-
8	505199301	KNEE JOINT ASSY -	1	-
9	503908301	BRAKE SPRING -	1	-
10	505199502	BRAKE BAND ASSY -	1	-
11	505201601	GUARD -	1	-
12	505199703	COVER -	1	-
14	523058001	LABEL *- up to s/n 20202399999*	1	-
15	575260402	CHAIN TENSIONER KIT -	1	-
16	740480702	O-RING -	1	-
17	503230063	WASHER -	1	-
20	537017401	BEARING SLEEVE -	1	-
22	525388701	CHAIN GUIDE -	1	-

Ref.	Article N.	Description	Qty	Kit
23	575793501	SCREW ITXPANM -	2	-
24	577975201	SPIKE OUTER -	1	-
25	503222401	LOCK NUT -	2	-
1	589809002	CLUTCH ASSY -	1	-
2	580653502	CLUTCH SPRING *s/n from 20133400001 - up to s/n 20164100192*	3	-
2	502164701	CLUTCH SPRING *s/n from 20164100193 -*	1	-
3	575261006	CLUTCH DRUM *- up to s/n 20202200048 3/8 x7*	1	-
3	575261005	CLUTCH DRUM ASSY *- up to s/n 20202200048 .325 x7*	1	-
3	575261010	CLUTCH DRUM ASSY -	1	-
4	501457402	RIM SPROCKET -	1	-
4	501598002	RIM SPROCKET *3/8x7*	1	-
5	503253401	NEEDLE BEARING -	1	-
6	577601101	WORM WHEEL *- up to s/n 20202200048*	1	-
6	586204601	WORM WHEEL *s/n from 20202200049 - 3/8*	1	-
7	505199909	OIL PUMP ASSY -	1	-
8	505200203	PUMP PISTON -	1	-
9	505200301	CASING -	1	-
10	503230060	WASHER -	2	-
11	503891601	SPRING -	1	-
12	505157001	ADJUSTMENT SCREW -	1	-
14	526818102	SCREW ITXSCM -	2	-
15	575847801	OIL HOSE	1	-

Ref.	Article N.	Description	Qty	Kit
		-		
16	504710003	OIL PLUMMET -	1	-
17	720123300	PARALLEL PIN -	2	-
18	503891501	SPRING -	1	-
19	505200101	PUMP CYLINDER -	1	-
20	503624903	SEALING PLUG -	1	-
21	598937706	CLUTCH DRUM ASSY -	1	-
1	588193901	CARBURETTOR AREA BASE	1	-
2	525755202	SCREW ITXSCFM	4	-
3	503869301	SUPPORT	2	-
4	581559201	BELLOWS	1	-
5	575380226	CRANKCASE ASSY	1	-
6	522742901	CHAIN GUIDE PLATE	1	-
7	575793501	SCREW ITXPANM	2	-
8	537403501	FILTER	1	-
9	530026119	CHECK VALVE	1	-
10	537210701	SPRING GUIDE	1	-
11	503436501	POSITION SPRING	1	-
12	505201201	CATCH	1	-
13	503751801	PIN	1	-
14	593806001	GUIDE BUSHING	2	-
15	522893801	BAR BOLT	2	-
16	525824401	SCREW ITXSCM	2	-
17	575841104	SCREW ITXSCM	6	-
18	537088301	GROMMET	1	-
19	577935201	SPIKE	1	-
20	522893901	CHAIN CATCHER	1	-
21	525798103	SCREW ITXSCFT	1	-
22	505125801	DEFLECTION LIMITER	1	-
23	595303003	SNAP LOCKING	1	-
24	588065501	AIR NOZZLE	1	-
25	526818101	SCREW ITXSCM	1	-
26	522620003	TANK CAP ASSY	1	-
27	589241101	GASKET	1	-

Ref.	Article N.	Description	Qty	Kit
28	503578901	HOLDER	1	-
29	525391201	RADIAL SEAL *- up to s/n 20202399999*	2	-
30	525887401	SCREW CITXPANT	1	-
31	575270003	GASKET KIT *A=set of gaskets*	1	-
32	525347601	BUMPER	1	-
33	577386801	CHAIN GUIDE	1	-
34	525887401	SCREW CITXPANT	1	-
35	526221801	SCREW CITXPANT	1	-
36	596911301	PROTECTIVE CAP *-up to s/n 20230403564*	1	-
1	575545215	CRANKSHAFT ASSY *- up to s/n 20202399999*	1	-
2	505133505	BALL BEARING	1	-
3	505133601	CUP	2	-
4	503256302	NEEDLE BEARING	1	-
5	525434204	BALL BEARING	2	-
6	525391201	RADIAL SEAL *- up to s/n 20202399999*	1	-
7	505416101	RADIAL SEAL	1	-
8	575545222	CRANKSHAFT ASSY *s/n from 20202400001 -*	1	-
1	587248702	CYLINDER COVER ASSY -	1	-
2	587149501	LABEL -	1	-
1	574519601	SPARK PLUG	1	-
2	582392701	SCREW	4	-
3	575276901	DECOMPRESSION VALVE	1	-
4	503552201	PLUG	1	-
5	576717602	SLEEVE	4	-
6	510164901	GASKET	1	-
7	575355805	CYLINDER ASSY *up to s/n - 201399999*	1	-
8	584807806	PISTON ASSY *up to s/n - 201399999*	1	-
9	505215701	PISTON RING *up to s/n - 20222500120*	1	-
10	737441000	SNAP RING	2	-
11	503256302	NEEDLE BEARING	1	-

Ref.	Article N.	Description	Qty	Kit
12	575270003	GASKET KIT *A=set of gaskets*	1	-
13	520291101	BUSHING	1	-
14	575355807	CYLINDER ASSY *s/n from 20141400001 -*	1	-
15	529504701	PISTON ASSY *s/n from 20141400001 -*	1	-
16	599998401	PISTON RING *s/n from 20222500121 -*	1	-
1	525887402	SCREW CITXPANT	1	-
2	504106301	HANDLE INSERT	1	-
4	575382205	FUEL TANK ASSY	1	-
5	501152901	TANK VENT ASSY	1	-
6	544099801	THROTTLE LOCKOUT	1	-
7	544099901	SPRING	1	-
8	505157701	THROTTLE	1	-
9	720182520	PARALLEL PIN	1	-
10	521887901	THROTTLE CABLE ASSY	1	-
11	525798102	SCREW ITXSCFT	1	-
12	573993503	FUEL HOSE	1	-
13	503443203	FUEL FILTER *18-40 µm (Blue)*	1	-
14	505165901	COVER *not XPW*	1	-
15	586312103	ANTIVIBRATION ELEMENT	1	-
16	505128702	ANTIVIBRATION ELEMENT	1	-
17	523085501	DEFLECTION LIMITER	1	-
18	501007601	SUPPORT	1	-
19	522620003	TANK CAP ASSY	1	-
20	589241101	GASKET	1	-
21	503578901	HOLDER	1	-
22	525798103	SCREW ITXSCFT	1	-
23	577844301	DECAL	1	-
24	529578202	FUEL HOSE ASSY *From s/n 20161000481- with magnet*	1	-
1	586146304	HANDLE SYSTEM -	1	-
2	525798103	SCREW ITXSCFT -	3	-
3	510097801	CONTACT PLATE -	1	-

Ref.	Article N.	Description	Qty	Kit
4	537252501	CONTACT PLATE -	1	-
5	525887401	SCREW CITXPANT -	1	-
6	505157403	COVER -	1	-
7	525798101	SCREW ITXSCFT -	2	-
8	505129705	ANTIVIBRATION ELEMENT -	1	-
9	505156904	FRONT HANDLE ASSY *incl. 5743863-01*	1	-
11	537088301	GROMMET -	1	-
12	576873004	SPIKE -	1	-
13	575793501	SCREW ITXPANM -	2	-
14	503222401	LOCK NUT -	2	-
15	577976301	SPIKE OUTER -	1	-
16	577976101	SPIKE -	1	-
17	525755103	SCREW ITXSCFM -	1	-
18	537024401	WEAR PROTECTION -	1	-
19	537089201	CHAIN CATCHER -	1	-
20	503222401	LOCK NUT -	1	-
1	576945104	SCREW KIT *Only screws*	1	-
2	525798103	SCREW ITXSCFT -	3	-
3	525798101	SCREW ITXSCFT -	1	-
4	505129705	ANTIVIBRATION ELEMENT -	1	-
5	505156903	FRONT HANDLE ASSY *incl. 5743863-01*	1	-
6	576873004	SPIKE	1	-

Ref.	Article N.	Description	Qty	Kit
		-		
7	575793501	SCREW ITXPANM -	2	-
8	503222401	LOCK NUT -	2	-
9	577976301	SPIKE OUTER *Spike Wrap*	1	-
10	577976101	SPIKE *Spike Wrap*	1	-
11	525755103	SCREW ITXSCFM -	1	-
12	537024401	WEAR PROTECTION -	1	-
13	537089201	CHAIN CATCHER -	1	-
14	503222401	LOCK NUT -	1	-
15	588966401	HANDLE -	1	-
1	575388905	FRONT HANDLE	1	-
2	525798103	SCREW ITXSCFT	2	-
3	525798101	SCREW ITXSCFT	3	-
4	505129705	ANTIVIBRATION ELEMENT	1	-
1	522741901	HANDLE INSERT -	1	-
2	578864601	THERMOSTAT ASSY -	1	-
3	537210801	RETAINER -	1	-
4	522611401	GENERATOR STATOR -	1	-
5	526818102	SCREW ITXSCM -	2	-
6	588168602	FOIL ELEMENT -	1	-
7	575388904	FRONT HANDLE -	1	-
8	525798103	SCREW ITXSCFT -	2	-
9	505157403	COVER -	1	-

Ref.	Article N.	Description	Qty	Kit
10	537252501	CONTACT PLATE -	1	-
11	510097801	CONTACT PLATE -	1	-
12	525887402	SCREW CITXPANT -	1	-
13	504872404	FLYWHEEL ASSY -	1	-
14	503220401	NUT -	1	-
15	503230042	WASHER -	2	-
16	501673501	SPRING -	2	-
17	501673201	PAWL -	2	-
18	506006901	SCREW -	2	-
19	505129705	ANTIVIBRATION ELEMENT -	1	-
20	525798101	SCREW ITXSCFT -	3	-
21	537088301	GROMMET -	1	-
22	582829601	THERMOSTAT ASSY *s/n up to 20164199999*	1	-
1	522795106	IGNITION MODULE ASSY *s/n up to - 20121401172 (14MHz)*	1	-
1	587306701	IGNITION MODULE *s/n from 20121401173 - (8MHz)*	1	-
2	501485404	SPARK PLUG CAP ASSY	1	-
3	525755203	SCREW ITXSCFM	2	-
4	575430601	WIRING ASSY *s/n up to - 20121401172 (14MHz)*	1	-
4	577967601	WIRING ASSY *s/n from 20121401173 - (8MHz)*	1	-
5	505178201	CABLE HOLDER	1	-
6	585321801	NUT	1	-
7	504872403	FLYWHEEL ASSY *XP*	1	-
7	504872404	FLYWHEEL ASSY *XPG*	1	-

Ref.	Article N.	Description	Qty	Kit
8	503230042	WASHER	2	-
9	501673501	SPRING	2	-
10	501673201	PAWL	2	-
11	506006901	SCREW	2	-
12	504043505	CABLE COVER	1	-
13	503238501	SHRINKAGE HOSE	2	-
14	525887401	SCREW CITXPANT	1	-
1	581914802	MUFFLER KIT -	1	-
2	724128759	SCREW CRPANM -	1	-
3	505171301	SPARK ARRESTER -	1	-
4	525825106	SCREW ITXSCM *s/n from 20133400001 -*	2	-
5	577656301	SLEEVE *s/n up to - 20133399999*	2	-
6	581918501	GASKET -	1	-
7	585178701	HEAT DEFLECTOR -	1	-
8	577902201	WASHER *s/n up to - 20133399999*	2	-
9	525762501	SCREW ITXSCM -	2	-
10	575270003	GASKET KIT *A=set of gaskets*	1	-
11	725537655	SCREW IHSCM *s/n up to - 20133399999*	2	-
1	580663714	SHORT BLOCK	1	-
1	505157501	AIR CONDUCTOR -	1	-
2	505159207	STARTER ASSY -	1	-
3	537232501	STARTER HANDLE -	1	-
4	505305125	STARTER ROPE -	1	-
5	576356601	SCREW ITXSCT -	1	-
6	537283201	SLEEVE -	1	-

Ref.	Article N.	Description	Qty	Kit
7	505158101	STARTER PULLEY ASSY -	1	-
8	525887401	SCREW CITXPANT -	2	-
9	598750301	SPRING CASSETTE ASSY -	1	-
10	525824501	SCREW CITXPANMO -	4	-
11	505159102	STARTER HOUSING -	1	-
12	523035606	LABEL *XPG*	1	-
12	523035605	LABEL *XP*	1	-
1	522675001	AIR FILTER ASSY *Nylon Mesh - 80 Micron Rating - Black - s/n up to - 20202600072*	1	-
1	522675002	AIR FILTER ASSY *Nylon Mesh - 44 Micron Rating - Yellow - s/n up to - 20202600072*	1	-
1	522675003	AIR FILTER ASSY *Non-Woven - White - s/n up to - 20202600072*	1	-
1	522675004	AIR FILTER ASSY *Nylon Mesh - 25 Micron Rating - Orange - s/n up to - 20202600072*	1	-
1	590458801	AIR FILTER *Nylon Mesh - 64 Micron Rating - Black - s/n from 20202600073 -*	1	-
1	590458802	AIR FILTER *Nylon Mesh - 25 Micron Rating - Yellow - s/n from 20202600073 -*	1	-
1	590458803	AIR FILTER ASSY *Non-Woven - Clear - s/n from 20202600073 -*	1	-
2	525397906	FILTER HOLDER ASSY *XPG s/n up to - 20202600072*	1	-
2	525397905	FILTER HOLDER ASSY *XP s/n up to - 20202600072*	1	-
2	597275501	FILTER HOLDER ASSY *XP s/n from 20202600073 -*	1	-
2	597275502	FILTER HOLDER ASSY *XPG s/n from 20202600073 -*	1	-
3	505176901	SHACKLE *s/n up to - 20202600072*	1	-
4	510017202	CHOKE CONTROL ASSY	1	-
5	505156201	SCREW	1	-
6	525588101	SEALING	1	-
7	503936601	PURGE	1	-

Ref.	Article N.	Description	Qty	Kit
8	574353503	SCREW ITXSCM	2	-
9	525344303	FUEL HOSE *XP s/n from 20173800688*	1	-
9	589357101	VENTILATING HOSE *s/n up to - 20154799999*	1	-
9	587645404	VENTILATING HOSE *s/n from 20154800001*	1	-
10	579194101	CARBURETTOR *s/n up to - 20121401172 (ZAMA EL44)*	1	-
10	501463307	CARBURETTOR KIT *s/n from 2012401173*	1	-
11	526818101	SCREW ITXSCM	4	-
12	505165202	FLANGE	1	-
13	503226503	SQUARE NUT	2	-
14	583964103	INLET PIPE	1	-
14	583964104	INLET PIPE *Cold resistant*	1	-
15	520290901	INTERMEDIATE WALL	1	-
16	525619201	SEALING	1	-
17	525619001	SEALING	1	-
18	523056801	FUEL HOSE	1	-
20	577536401	WIRING ASSY *s/n from 20121401173 -*	1	-
21	582025101	SUPPORT SLEEVE	1	-
22	598934501	FILTER UNIT *XP*	1	-
22	598934502	FILTER UNIT *XPG*	1	-
23	731231401	HEXAGON NUT *s/n from 20202600073 -*	1	-

IGNITION SYSTEM

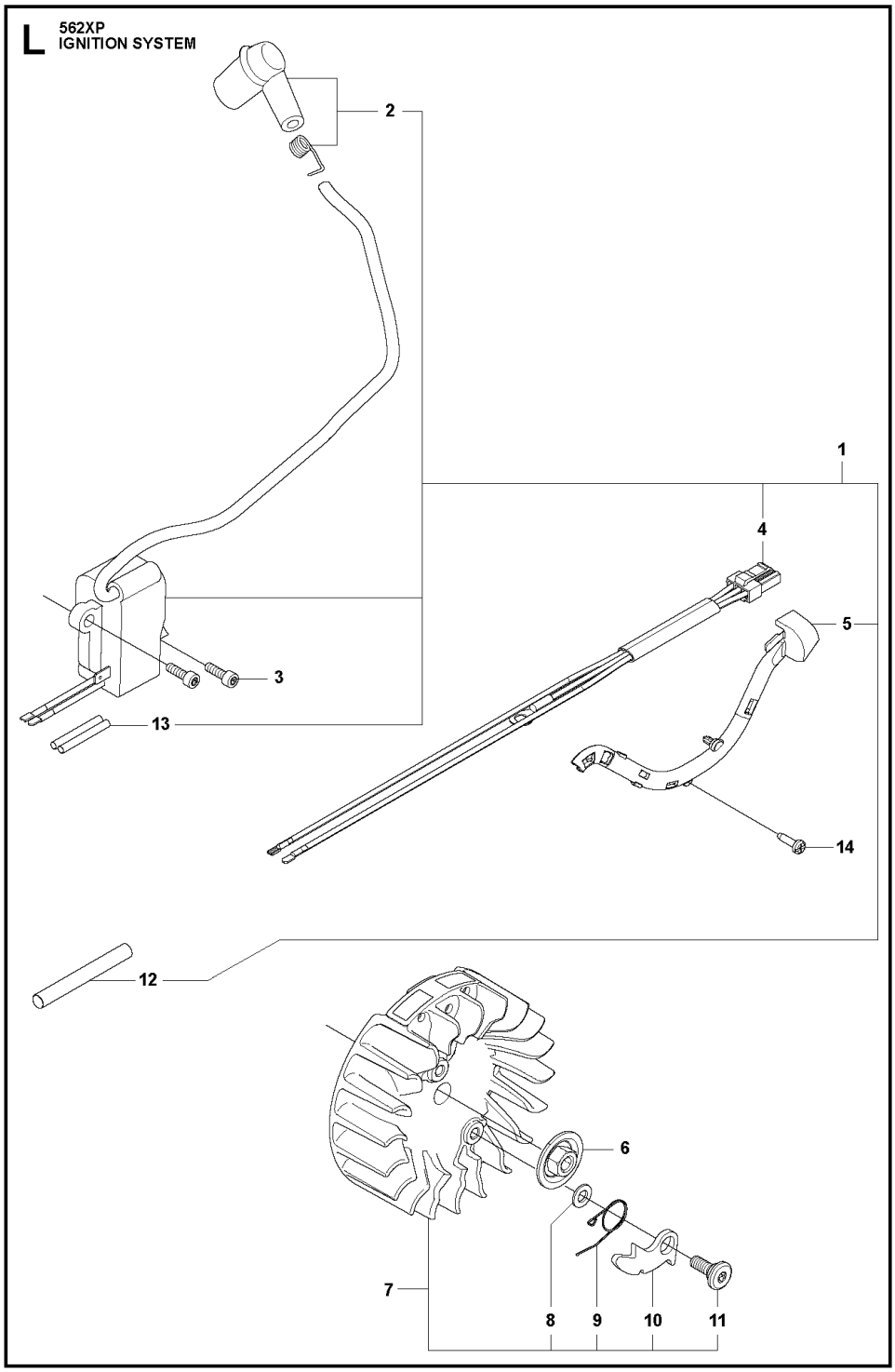

Ref.	Article N.	Description	Qty	Kit
1	575439201	TOOL -	1	-
2	522521101	COMBINATION WRENCH -	1	-
3	503558601	SPANNER -	1	-

Ref.	Article N.	Description	Qty	Kit
4	503558602	SPANNER -	1	-
5	503621201	GREASE -	1	-
6	501911401	GREASE GUN -	1	-
7	583897101	DIAGNOSTIC TOOL KIT -	1	-
8	576183401	CABLE ASSY *Diagnostics cable 14 Mhz*	1	-
9	522986502	WINTER KIT -	1	-
10	505166101	WINTER COVER -	1	-
11	503405901	WINTER PLUG -	1	-
12	503217016	SCREW CCRPANT -	2	-
13	740420100	O-RING -	2	-
14	578125501	WINTER PLUG -	1	-
15	576952201	CABLE ASSY *Diagnostics cable 8 MHz*	1	-
16	503267201	GLUE -	1	-
17	575880701	WRENCH -	1	-
1	579194101	CARBURETTOR *s/n up to - 20121401172 (ZAMA EL44)*	1	-
1	501463307	CARBURETTOR KIT	1	-
4	522517401	DIAPHRAGM	1	-
5	522517501	GASKET	1	-
6	503479701	VALVE	1	-
7	503665901	LEVER	1	-
8	537383401	SPRING	1	-
12	576414201	MAIN NOZZLE	1	-
17	503481801	SCREW	3	-
21	522517801	THROTTLE LEVER	1	-
26	503535701	STRAINER	1	-
27	537383101	DIAPHRAGM PUMP	1	-
28	537403301	DIAPHRAGM	1	-

Ref.	Article N.	Description	Qty	Kit
29	537020101	GASKET	1	-
32	503479001	SCREW	1	-
46	537177001	VALVE	1	-
50	522518901	GASKET KIT *B=set of gaskets*	1	-
51	582025101	SUPPORT SLEEVE	1	-
1	525250602	HAND GUARD -	1	-
2	526834501	SCREW -	2	-
3	577780201	BUSHING -	2	-
4	505197301	NUT -	2	-
5	525743305	CLUTCH COVER ASSY -	1	-
6	503751801	PIN -	1	-
7	526221801	SCREW CITXPANT -	5	-
8	505199301	KNEE JOINT ASSY -	1	-
9	503908301	BRAKE SPRING -	1	-
10	505199502	BRAKE BAND ASSY -	1	-
11	505201601	GUARD -	1	-
12	505199703	COVER -	1	-
14	523058001	LABEL *- up to s/n 20202399999*	1	-
15	575260402	CHAIN TENSIONER KIT -	1	-
16	740480702	O-RING -	1	-
17	503230063	WASHER -	1	-
20	537017401	BEARING SLEEVE -	1	-
22	525388701	CHAIN GUIDE -	1	-

Ref.	Article N.	Description	Qty	Kit
23	575793501	SCREW ITXPANM -	2	-
24	577975201	SPIKE OUTER -	1	-
25	503222401	LOCK NUT -	2	-
1	589809002	CLUTCH ASSY -	1	-
2	580653502	CLUTCH SPRING *s/n from 20133400001 - up to s/n 20164100192*	3	-
2	502164701	CLUTCH SPRING *s/n from 20164100193 -*	1	-
3	575261006	CLUTCH DRUM *- up to s/n 20202200048 3/8 x7*	1	-
3	575261005	CLUTCH DRUM ASSY *- up to s/n 20202200048 .325 x7*	1	-
3	575261010	CLUTCH DRUM ASSY -	1	-
4	501457402	RIM SPROCKET -	1	-
4	501598002	RIM SPROCKET *3/8x7*	1	-
5	503253401	NEEDLE BEARING -	1	-
6	577601101	WORM WHEEL *- up to s/n 20202200048*	1	-
6	586204601	WORM WHEEL *s/n from 20202200049 - 3/8*	1	-
7	505199909	OIL PUMP ASSY -	1	-
8	505200203	PUMP PISTON -	1	-
9	505200301	CASING -	1	-
10	503230060	WASHER -	2	-
11	503891601	SPRING -	1	-
12	505157001	ADJUSTMENT SCREW -	1	-
14	526818102	SCREW ITXSCM -	2	-
15	575847801	OIL HOSE	1	-

Ref.	Article N.	Description	Qty	Kit
		-		
16	504710003	OIL PLUMMET -	1	-
17	720123300	PARALLEL PIN -	2	-
18	503891501	SPRING -	1	-
19	505200101	PUMP CYLINDER -	1	-
20	503624903	SEALING PLUG -	1	-
21	598937706	CLUTCH DRUM ASSY -	1	-
1	588193901	CARBURETTOR AREA BASE	1	-
2	525755202	SCREW ITXSCFM	4	-
3	503869301	SUPPORT	2	-
4	581559201	BELLOWS	1	-
5	575380226	CRANKCASE ASSY	1	-
6	522742901	CHAIN GUIDE PLATE	1	-
7	575793501	SCREW ITXPANM	2	-
8	537403501	FILTER	1	-
9	530026119	CHECK VALVE	1	-
10	537210701	SPRING GUIDE	1	-
11	503436501	POSITION SPRING	1	-
12	505201201	CATCH	1	-
13	503751801	PIN	1	-
14	593806001	GUIDE BUSHING	2	-
15	522893801	BAR BOLT	2	-
16	525824401	SCREW ITXSCM	2	-
17	575841104	SCREW ITXSCM	6	-
18	537088301	GROMMET	1	-
19	577935201	SPIKE	1	-
20	522893901	CHAIN CATCHER	1	-
21	525798103	SCREW ITXSCFT	1	-
22	505125801	DEFLECTION LIMITER	1	-
23	595303003	SNAP LOCKING	1	-
24	588065501	AIR NOZZLE	1	-
25	526818101	SCREW ITXSCM	1	-
26	522620003	TANK CAP ASSY	1	-
27	589241101	GASKET	1	-

Ref.	Article N.	Description	Qty	Kit
28	503578901	HOLDER	1	-
29	525391201	RADIAL SEAL *- up to s/n 20202399999*	2	-
30	525887401	SCREW CITXPANT	1	-
31	575270003	GASKET KIT *A=set of gaskets*	1	-
32	525347601	BUMPER	1	-
33	577386801	CHAIN GUIDE	1	-
34	525887401	SCREW CITXPANT	1	-
35	526221801	SCREW CITXPANT	1	-
36	596911301	PROTECTIVE CAP *-up to s/n 20230403564*	1	-
1	575545215	CRANKSHAFT ASSY *- up to s/n 20202399999*	1	-
2	505133505	BALL BEARING	1	-
3	505133601	CUP	2	-
4	503256302	NEEDLE BEARING	1	-
5	525434204	BALL BEARING	2	-
6	525391201	RADIAL SEAL *- up to s/n 20202399999*	1	-
7	505416101	RADIAL SEAL	1	-
8	575545222	CRANKSHAFT ASSY *s/n from 20202400001 -*	1	-
1	587248702	CYLINDER COVER ASSY -	1	-
2	587149501	LABEL -	1	-
1	574519601	SPARK PLUG	1	-
2	582392701	SCREW	4	-
3	575276901	DECOMPRESSION VALVE	1	-
4	503552201	PLUG	1	-
5	576717602	SLEEVE	4	-
6	510164901	GASKET	1	-
7	575355805	CYLINDER ASSY *up to s/n - 201399999*	1	-
8	584807806	PISTON ASSY *up to s/n - 201399999*	1	-
9	505215701	PISTON RING *up to s/n - 20222500120*	1	-
10	737441000	SNAP RING	2	-
11	503256302	NEEDLE BEARING	1	-

Ref.	Article N.	Description	Qty	Kit
12	575270003	GASKET KIT *A=set of gaskets*	1	-
13	520291101	BUSHING	1	-
14	575355807	CYLINDER ASSY *s/n from 20141400001 -*	1	-
15	529504701	PISTON ASSY *s/n from 20141400001 -*	1	-
16	599998401	PISTON RING *s/n from 20222500121 -*	1	-
1	525887402	SCREW CITXPANT	1	-
2	504106301	HANDLE INSERT	1	-
4	575382205	FUEL TANK ASSY	1	-
5	501152901	TANK VENT ASSY	1	-
6	544099801	THROTTLE LOCKOUT	1	-
7	544099901	SPRING	1	-
8	505157701	THROTTLE	1	-
9	720182520	PARALLEL PIN	1	-
10	521887901	THROTTLE CABLE ASSY	1	-
11	525798102	SCREW ITXSCFT	1	-
12	573993503	FUEL HOSE	1	-
13	503443203	FUEL FILTER *18-40 µm (Blue)*	1	-
14	505165901	COVER *not XPW*	1	-
15	586312103	ANTIVIBRATION ELEMENT	1	-
16	505128702	ANTIVIBRATION ELEMENT	1	-
17	523085501	DEFLECTION LIMITER	1	-
18	501007601	SUPPORT	1	-
19	522620003	TANK CAP ASSY	1	-
20	589241101	GASKET	1	-
21	503578901	HOLDER	1	-
22	525798103	SCREW ITXSCFT	1	-
23	577844301	DECAL	1	-
24	529578202	FUEL HOSE ASSY *From s/n 20161000481- with magnet*	1	-
1	586146304	HANDLE SYSTEM -	1	-
2	525798103	SCREW ITXSCFT -	3	-
3	510097801	CONTACT PLATE -	1	-

Ref.	Article N.	Description	Qty	Kit
4	537252501	CONTACT PLATE -	1	-
5	525887401	SCREW CITXPANT -	1	-
6	505157403	COVER -	1	-
7	525798101	SCREW ITXSCFT -	2	-
8	505129705	ANTIVIBRATION ELEMENT -	1	-
9	505156904	FRONT HANDLE ASSY *incl. 5743863-01*	1	-
11	537088301	GROMMET -	1	-
12	576873004	SPIKE -	1	-
13	575793501	SCREW ITXPANM -	2	-
14	503222401	LOCK NUT -	2	-
15	577976301	SPIKE OUTER -	1	-
16	577976101	SPIKE -	1	-
17	525755103	SCREW ITXSCFM -	1	-
18	537024401	WEAR PROTECTION -	1	-
19	537089201	CHAIN CATCHER -	1	-
20	503222401	LOCK NUT -	1	-
1	576945104	SCREW KIT *Only screws*	1	-
2	525798103	SCREW ITXSCFT -	3	-
3	525798101	SCREW ITXSCFT -	1	-
4	505129705	ANTIVIBRATION ELEMENT -	1	-
5	505156903	FRONT HANDLE ASSY *incl. 5743863-01*	1	-
6	576873004	SPIKE	1	-

Ref.	Article N.	Description	Qty	Kit
		-		
7	575793501	SCREW ITXPANM -	2	-
8	503222401	LOCK NUT -	2	-
9	577976301	SPIKE OUTER *Spike Wrap*	1	-
10	577976101	SPIKE *Spike Wrap*	1	-
11	525755103	SCREW ITXSCFM -	1	-
12	537024401	WEAR PROTECTION -	1	-
13	537089201	CHAIN CATCHER -	1	-
14	503222401	LOCK NUT -	1	-
15	588966401	HANDLE -	1	-
1	575388905	FRONT HANDLE	1	-
2	525798103	SCREW ITXSCFT	2	-
3	525798101	SCREW ITXSCFT	3	-
4	505129705	ANTIVIBRATION ELEMENT	1	-
1	522741901	HANDLE INSERT -	1	-
2	578864601	THERMOSTAT ASSY -	1	-
3	537210801	RETAINER -	1	-
4	522611401	GENERATOR STATOR -	1	-
5	526818102	SCREW ITXSCM -	2	-
6	588168602	FOIL ELEMENT -	1	-
7	575388904	FRONT HANDLE -	1	-
8	525798103	SCREW ITXSCFT -	2	-
9	505157403	COVER -	1	-

Ref.	Article N.	Description	Qty	Kit
10	537252501	CONTACT PLATE -	1	-
11	510097801	CONTACT PLATE -	1	-
12	525887402	SCREW CITXPANT -	1	-
13	504872404	FLYWHEEL ASSY -	1	-
14	503220401	NUT -	1	-
15	503230042	WASHER -	2	-
16	501673501	SPRING -	2	-
17	501673201	PAWL -	2	-
18	506006901	SCREW -	2	-
19	505129705	ANTIVIBRATION ELEMENT -	1	-
20	525798101	SCREW ITXSCFT -	3	-
21	537088301	GROMMET -	1	-
22	582829601	THERMOSTAT ASSY *s/n up to 20164199999*	1	-
1	522795106	IGNITION MODULE ASSY *s/n up to - 20121401172 (14MHz)*	1	-
1	587306701	IGNITION MODULE *s/n from 20121401173 - (8MHz)*	1	-
2	501485404	SPARK PLUG CAP ASSY	1	-
3	525755203	SCREW ITXSCFM	2	-
4	575430601	WIRING ASSY *s/n up to - 20121401172 (14MHz)*	1	-
4	577967601	WIRING ASSY *s/n from 20121401173 - (8MHz)*	1	-
5	505178201	CABLE HOLDER	1	-
6	585321801	NUT	1	-
7	504872403	FLYWHEEL ASSY *XP*	1	-
7	504872404	FLYWHEEL ASSY *XPG*	1	-

Ref.	Article N.	Description	Qty	Kit
8	503230042	WASHER	2	-
9	501673501	SPRING	2	-
10	501673201	PAWL	2	-
11	506006901	SCREW	2	-
12	504043505	CABLE COVER	1	-
13	503238501	SHRINKAGE HOSE	2	-
14	525887401	SCREW CITXPANT	1	-
1	581914802	MUFFLER KIT -	1	-
2	724128759	SCREW CRPANM -	1	-
3	505171301	SPARK ARRESTER -	1	-
4	525825106	SCREW ITXSCM *s/n from 20133400001 -*	2	-
5	577656301	SLEEVE *s/n up to - 20133399999*	2	-
6	581918501	GASKET -	1	-
7	585178701	HEAT DEFLECTOR -	1	-
8	577902201	WASHER *s/n up to - 20133399999*	2	-
9	525762501	SCREW ITXSCM -	2	-
10	575270003	GASKET KIT *A=set of gaskets*	1	-
11	725537655	SCREW IHSCM *s/n up to - 20133399999*	2	-
1	580663714	SHORT BLOCK	1	-
1	505157501	AIR CONDUCTOR -	1	-
2	505159207	STARTER ASSY -	1	-
3	537232501	STARTER HANDLE -	1	-
4	505305125	STARTER ROPE -	1	-
5	576356601	SCREW ITXSCT -	1	-
6	537283201	SLEEVE -	1	-

Ref.	Article N.	Description	Qty	Kit
7	505158101	STARTER PULLEY ASSY -	1	-
8	525887401	SCREW CITXPANT -	2	-
9	598750301	SPRING CASSETTE ASSY -	1	-
10	525824501	SCREW CITXPANMO -	4	-
11	505159102	STARTER HOUSING -	1	-
12	523035606	LABEL *XPG*	1	-
12	523035605	LABEL *XP*	1	-
1	522675001	AIR FILTER ASSY *Nylon Mesh - 80 Micron Rating - Black - s/n up to - 20202600072*	1	-
1	522675002	AIR FILTER ASSY *Nylon Mesh - 44 Micron Rating - Yellow - s/n up to - 20202600072*	1	-
1	522675003	AIR FILTER ASSY *Non-Woven - White - s/n up to - 20202600072*	1	-
1	522675004	AIR FILTER ASSY *Nylon Mesh - 25 Micron Rating - Orange - s/n up to - 20202600072*	1	-
1	590458801	AIR FILTER *Nylon Mesh - 64 Micron Rating - Black - s/n from 20202600073 -*	1	-
1	590458802	AIR FILTER *Nylon Mesh - 25 Micron Rating - Yellow - s/n from 20202600073 -*	1	-
1	590458803	AIR FILTER ASSY *Non-Woven - Clear - s/n from 20202600073 -*	1	-
2	525397906	FILTER HOLDER ASSY *XPG s/n up to - 20202600072*	1	-
2	525397905	FILTER HOLDER ASSY *XP s/n up to - 20202600072*	1	-
2	597275501	FILTER HOLDER ASSY *XP s/n from 20202600073 -*	1	-
2	597275502	FILTER HOLDER ASSY *XPG s/n from 20202600073 -*	1	-
3	505176901	SHACKLE *s/n up to - 20202600072*	1	-
4	510017202	CHOKE CONTROL ASSY	1	-
5	505156201	SCREW	1	-
6	525588101	SEALING	1	-
7	503936601	PURGE	1	-

Ref.	Article N.	Description	Qty	Kit
8	574353503	SCREW ITXSCM	2	-
9	525344303	FUEL HOSE *XP s/n from 20173800688*	1	-
9	589357101	VENTILATING HOSE *s/n up to - 20154799999*	1	-
9	587645404	VENTILATING HOSE *s/n from 20154800001*	1	-
10	579194101	CARBURETTOR *s/n up to - 20121401172 (ZAMA EL44)*	1	-
10	501463307	CARBURETTOR KIT *s/n from 2012401173*	1	-
11	526818101	SCREW ITXSCM	4	-
12	505165202	FLANGE	1	-
13	503226503	SQUARE NUT	2	-
14	583964103	INLET PIPE	1	-
14	583964104	INLET PIPE *Cold resistant*	1	-
15	520290901	INTERMEDIATE WALL	1	-
16	525619201	SEALING	1	-
17	525619001	SEALING	1	-
18	523056801	FUEL HOSE	1	-
20	577536401	WIRING ASSY *s/n from 20121401173 -*	1	-
21	582025101	SUPPORT SLEEVE	1	-
22	598934501	FILTER UNIT *XP*	1	-
22	598934502	FILTER UNIT *XPG*	1	-
23	731231401	HEXAGON NUT *s/n from 20202600073 -*	1	-

MUFFLER

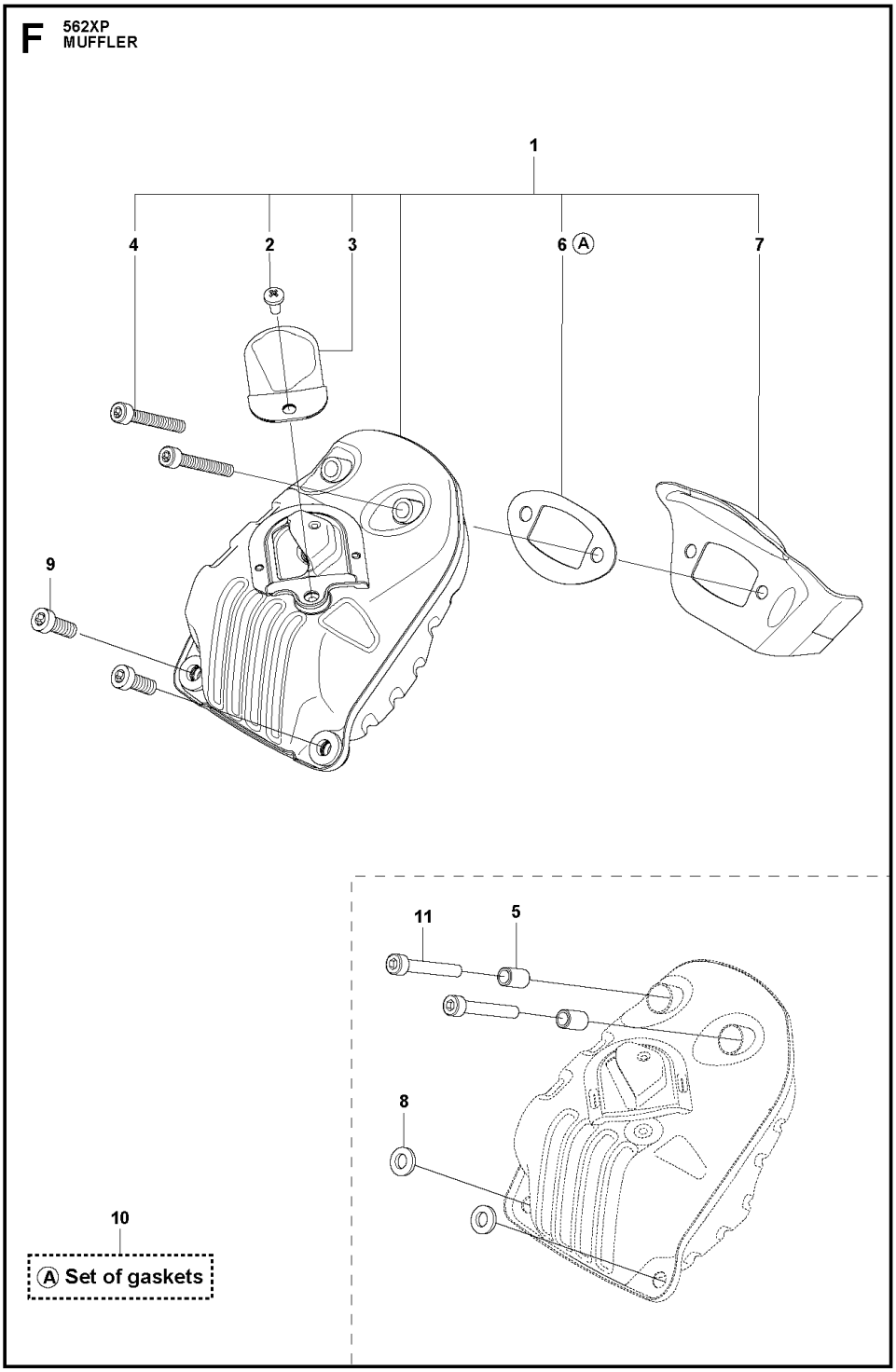

Ref.	Article N.	Description	Qty	Kit
1	575439201	TOOL -	1	-
2	522521101	COMBINATION WRENCH -	1	-
3	503558601	SPANNER -	1	-

Ref.	Article N.	Description	Qty	Kit
4	503558602	SPANNER -	1	-
5	503621201	GREASE -	1	-
6	501911401	GREASE GUN -	1	-
7	583897101	DIAGNOSTIC TOOL KIT -	1	-
8	576183401	CABLE ASSY *Diagnostics cable 14 Mhz*	1	-
9	522986502	WINTER KIT -	1	-
10	505166101	WINTER COVER -	1	-
11	503405901	WINTER PLUG -	1	-
12	503217016	SCREW CCRPANT -	2	-
13	740420100	O-RING -	2	-
14	578125501	WINTER PLUG -	1	-
15	576952201	CABLE ASSY *Diagnostics cable 8 MHz*	1	-
16	503267201	GLUE -	1	-
17	575880701	WRENCH -	1	-
1	579194101	CARBURETTOR *s/n up to - 20121401172 (ZAMA EL44)*	1	-
1	501463307	CARBURETTOR KIT	1	-
4	522517401	DIAPHRAGM	1	-
5	522517501	GASKET	1	-
6	503479701	VALVE	1	-
7	503665901	LEVER	1	-
8	537383401	SPRING	1	-
12	576414201	MAIN NOZZLE	1	-
17	503481801	SCREW	3	-
21	522517801	THROTTLE LEVER	1	-
26	503535701	STRAINER	1	-
27	537383101	DIAPHRAGM PUMP	1	-
28	537403301	DIAPHRAGM	1	-

Ref.	Article N.	Description	Qty	Kit
29	537020101	GASKET	1	-
32	503479001	SCREW	1	-
46	537177001	VALVE	1	-
50	522518901	GASKET KIT *B=set of gaskets*	1	-
51	582025101	SUPPORT SLEEVE	1	-
1	525250602	HAND GUARD -	1	-
2	526834501	SCREW -	2	-
3	577780201	BUSHING -	2	-
4	505197301	NUT -	2	-
5	525743305	CLUTCH COVER ASSY -	1	-
6	503751801	PIN -	1	-
7	526221801	SCREW CITXPANT -	5	-
8	505199301	KNEE JOINT ASSY -	1	-
9	503908301	BRAKE SPRING -	1	-
10	505199502	BRAKE BAND ASSY -	1	-
11	505201601	GUARD -	1	-
12	505199703	COVER -	1	-
14	523058001	LABEL *- up to s/n 20202399999*	1	-
15	575260402	CHAIN TENSIONER KIT -	1	-
16	740480702	O-RING -	1	-
17	503230063	WASHER -	1	-
20	537017401	BEARING SLEEVE -	1	-
22	525388701	CHAIN GUIDE -	1	-

Ref.	Article N.	Description	Qty	Kit
23	575793501	SCREW ITXPANM -	2	-
24	577975201	SPIKE OUTER -	1	-
25	503222401	LOCK NUT -	2	-
1	589809002	CLUTCH ASSY -	1	-
2	580653502	CLUTCH SPRING *s/n from 20133400001 - up to s/n 20164100192*	3	-
2	502164701	CLUTCH SPRING *s/n from 20164100193 -*	1	-
3	575261006	CLUTCH DRUM *- up to s/n 20202200048 3/8 x7*	1	-
3	575261005	CLUTCH DRUM ASSY *- up to s/n 20202200048 .325 x7*	1	-
3	575261010	CLUTCH DRUM ASSY -	1	-
4	501457402	RIM SPROCKET -	1	-
4	501598002	RIM SPROCKET *3/8x7*	1	-
5	503253401	NEEDLE BEARING -	1	-
6	577601101	WORM WHEEL *- up to s/n 20202200048*	1	-
6	586204601	WORM WHEEL *s/n from 20202200049 - 3/8*	1	-
7	505199909	OIL PUMP ASSY -	1	-
8	505200203	PUMP PISTON -	1	-
9	505200301	CASING -	1	-
10	503230060	WASHER -	2	-
11	503891601	SPRING -	1	-
12	505157001	ADJUSTMENT SCREW -	1	-
14	526818102	SCREW ITXSCM -	2	-
15	575847801	OIL HOSE	1	-

Ref.	Article N.	Description	Qty	Kit
		-		
16	504710003	OIL PLUMMET -	1	-
17	720123300	PARALLEL PIN -	2	-
18	503891501	SPRING -	1	-
19	505200101	PUMP CYLINDER -	1	-
20	503624903	SEALING PLUG -	1	-
21	598937706	CLUTCH DRUM ASSY -	1	-
1	588193901	CARBURETTOR AREA BASE	1	-
2	525755202	SCREW ITXSCFM	4	-
3	503869301	SUPPORT	2	-
4	581559201	BELLOWS	1	-
5	575380226	CRANKCASE ASSY	1	-
6	522742901	CHAIN GUIDE PLATE	1	-
7	575793501	SCREW ITXPANM	2	-
8	537403501	FILTER	1	-
9	530026119	CHECK VALVE	1	-
10	537210701	SPRING GUIDE	1	-
11	503436501	POSITION SPRING	1	-
12	505201201	CATCH	1	-
13	503751801	PIN	1	-
14	593806001	GUIDE BUSHING	2	-
15	522893801	BAR BOLT	2	-
16	525824401	SCREW ITXSCM	2	-
17	575841104	SCREW ITXSCM	6	-
18	537088301	GROMMET	1	-
19	577935201	SPIKE	1	-
20	522893901	CHAIN CATCHER	1	-
21	525798103	SCREW ITXSCFT	1	-
22	505125801	DEFLECTION LIMITER	1	-
23	595303003	SNAP LOCKING	1	-
24	588065501	AIR NOZZLE	1	-
25	526818101	SCREW ITXSCM	1	-
26	522620003	TANK CAP ASSY	1	-
27	589241101	GASKET	1	-

Ref.	Article N.	Description	Qty	Kit
28	503578901	HOLDER	1	-
29	525391201	RADIAL SEAL *- up to s/n 20202399999*	2	-
30	525887401	SCREW CITXPANT	1	-
31	575270003	GASKET KIT *A=set of gaskets*	1	-
32	525347601	BUMPER	1	-
33	577386801	CHAIN GUIDE	1	-
34	525887401	SCREW CITXPANT	1	-
35	526221801	SCREW CITXPANT	1	-
36	596911301	PROTECTIVE CAP *-up to s/n 20230403564*	1	-
1	575545215	CRANKSHAFT ASSY *- up to s/n 20202399999*	1	-
2	505133505	BALL BEARING	1	-
3	505133601	CUP	2	-
4	503256302	NEEDLE BEARING	1	-
5	525434204	BALL BEARING	2	-
6	525391201	RADIAL SEAL *- up to s/n 20202399999*	1	-
7	505416101	RADIAL SEAL	1	-
8	575545222	CRANKSHAFT ASSY *s/n from 20202400001 -*	1	-
1	587248702	CYLINDER COVER ASSY -	1	-
2	587149501	LABEL -	1	-
1	574519601	SPARK PLUG	1	-
2	582392701	SCREW	4	-
3	575276901	DECOMPRESSION VALVE	1	-
4	503552201	PLUG	1	-
5	576717602	SLEEVE	4	-
6	510164901	GASKET	1	-
7	575355805	CYLINDER ASSY *up to s/n - 201399999*	1	-
8	584807806	PISTON ASSY *up to s/n - 201399999*	1	-
9	505215701	PISTON RING *up to s/n - 20222500120*	1	-
10	737441000	SNAP RING	2	-
11	503256302	NEEDLE BEARING	1	-

Ref.	Article N.	Description	Qty	Kit
12	575270003	GASKET KIT *A=set of gaskets*	1	-
13	520291101	BUSHING	1	-
14	575355807	CYLINDER ASSY *s/n from 20141400001 -*	1	-
15	529504701	PISTON ASSY *s/n from 20141400001 -*	1	-
16	599998401	PISTON RING *s/n from 20222500121 -*	1	-
1	525887402	SCREW CITXPANT	1	-
2	504106301	HANDLE INSERT	1	-
4	575382205	FUEL TANK ASSY	1	-
5	501152901	TANK VENT ASSY	1	-
6	544099801	THROTTLE LOCKOUT	1	-
7	544099901	SPRING	1	-
8	505157701	THROTTLE	1	-
9	720182520	PARALLEL PIN	1	-
10	521887901	THROTTLE CABLE ASSY	1	-
11	525798102	SCREW ITXSCFT	1	-
12	573993503	FUEL HOSE	1	-
13	503443203	FUEL FILTER *18-40 µm (Blue)*	1	-
14	505165901	COVER *not XPW*	1	-
15	586312103	ANTIVIBRATION ELEMENT	1	-
16	505128702	ANTIVIBRATION ELEMENT	1	-
17	523085501	DEFLECTION LIMITER	1	-
18	501007601	SUPPORT	1	-
19	522620003	TANK CAP ASSY	1	-
20	589241101	GASKET	1	-
21	503578901	HOLDER	1	-
22	525798103	SCREW ITXSCFT	1	-
23	577844301	DECAL	1	-
24	529578202	FUEL HOSE ASSY *From s/n 20161000481- with magnet*	1	-
1	586146304	HANDLE SYSTEM -	1	-
2	525798103	SCREW ITXSCFT -	3	-
3	510097801	CONTACT PLATE -	1	-

Ref.	Article N.	Description	Qty	Kit
4	537252501	CONTACT PLATE -	1	-
5	525887401	SCREW CITXPANT -	1	-
6	505157403	COVER -	1	-
7	525798101	SCREW ITXSCFT -	2	-
8	505129705	ANTIVIBRATION ELEMENT -	1	-
9	505156904	FRONT HANDLE ASSY *incl. 5743863-01*	1	-
11	537088301	GROMMET -	1	-
12	576873004	SPIKE -	1	-
13	575793501	SCREW ITXPANM -	2	-
14	503222401	LOCK NUT -	2	-
15	577976301	SPIKE OUTER -	1	-
16	577976101	SPIKE -	1	-
17	525755103	SCREW ITXSCFM -	1	-
18	537024401	WEAR PROTECTION -	1	-
19	537089201	CHAIN CATCHER -	1	-
20	503222401	LOCK NUT -	1	-
1	576945104	SCREW KIT *Only screws*	1	-
2	525798103	SCREW ITXSCFT -	3	-
3	525798101	SCREW ITXSCFT -	1	-
4	505129705	ANTIVIBRATION ELEMENT -	1	-
5	505156903	FRONT HANDLE ASSY *incl. 5743863-01*	1	-
6	576873004	SPIKE	1	-

Ref.	Article N.	Description	Qty	Kit
		-		
7	575793501	SCREW ITXPANM -	2	-
8	503222401	LOCK NUT -	2	-
9	577976301	SPIKE OUTER *Spike Wrap*	1	-
10	577976101	SPIKE *Spike Wrap*	1	-
11	525755103	SCREW ITXSCFM -	1	-
12	537024401	WEAR PROTECTION -	1	-
13	537089201	CHAIN CATCHER -	1	-
14	503222401	LOCK NUT -	1	-
15	588966401	HANDLE -	1	-
1	575388905	FRONT HANDLE	1	-
2	525798103	SCREW ITXSCFT	2	-
3	525798101	SCREW ITXSCFT	3	-
4	505129705	ANTIVIBRATION ELEMENT	1	-
1	522741901	HANDLE INSERT -	1	-
2	578864601	THERMOSTAT ASSY -	1	-
3	537210801	RETAINER -	1	-
4	522611401	GENERATOR STATOR -	1	-
5	526818102	SCREW ITXSCM -	2	-
6	588168602	FOIL ELEMENT -	1	-
7	575388904	FRONT HANDLE -	1	-
8	525798103	SCREW ITXSCFT -	2	-
9	505157403	COVER -	1	-

Ref.	Article N.	Description	Qty	Kit
10	537252501	CONTACT PLATE -	1	-
11	510097801	CONTACT PLATE -	1	-
12	525887402	SCREW CITXPANT -	1	-
13	504872404	FLYWHEEL ASSY -	1	-
14	503220401	NUT -	1	-
15	503230042	WASHER -	2	-
16	501673501	SPRING -	2	-
17	501673201	PAWL -	2	-
18	506006901	SCREW -	2	-
19	505129705	ANTIVIBRATION ELEMENT -	1	-
20	525798101	SCREW ITXSCFT -	3	-
21	537088301	GROMMET -	1	-
22	582829601	THERMOSTAT ASSY *s/n up to 20164199999*	1	-
1	522795106	IGNITION MODULE ASSY *s/n up to - 20121401172 (14MHz)*	1	-
1	587306701	IGNITION MODULE *s/n from 20121401173 - (8MHz)*	1	-
2	501485404	SPARK PLUG CAP ASSY	1	-
3	525755203	SCREW ITXSCFM	2	-
4	575430601	WIRING ASSY *s/n up to - 20121401172 (14MHz)*	1	-
4	577967601	WIRING ASSY *s/n from 20121401173 - (8MHz)*	1	-
5	505178201	CABLE HOLDER	1	-
6	585321801	NUT	1	-
7	504872403	FLYWHEEL ASSY *XP*	1	-
7	504872404	FLYWHEEL ASSY *XPG*	1	-

Ref.	Article N.	Description	Qty	Kit
8	503230042	WASHER	2	-
9	501673501	SPRING	2	-
10	501673201	PAWL	2	-
11	506006901	SCREW	2	-
12	504043505	CABLE COVER	1	-
13	503238501	SHRINKAGE HOSE	2	-
14	525887401	SCREW CITXPANT	1	-
1	581914802	MUFFLER KIT -	1	-
2	724128759	SCREW CRPANM -	1	-
3	505171301	SPARK ARRESTER -	1	-
4	525825106	SCREW ITXSCM *s/n from 20133400001 -*	2	-
5	577656301	SLEEVE *s/n up to - 20133399999*	2	-
6	581918501	GASKET -	1	-
7	585178701	HEAT DEFLECTOR -	1	-
8	577902201	WASHER *s/n up to - 20133399999*	2	-
9	525762501	SCREW ITXSCM -	2	-
10	575270003	GASKET KIT *A=set of gaskets*	1	-
11	725537655	SCREW IHSCM *s/n up to - 20133399999*	2	-
1	580663714	SHORT BLOCK	1	-
1	505157501	AIR CONDUCTOR -	1	-
2	505159207	STARTER ASSY -	1	-
3	537232501	STARTER HANDLE -	1	-
4	505305125	STARTER ROPE -	1	-
5	576356601	SCREW ITXSCT -	1	-
6	537283201	SLEEVE -	1	-

Ref.	Article N.	Description	Qty	Kit
7	505158101	STARTER PULLEY ASSY -	1	-
8	525887401	SCREW CITXPANT -	2	-
9	598750301	SPRING CASSETTE ASSY -	1	-
10	525824501	SCREW CITXPANMO -	4	-
11	505159102	STARTER HOUSING -	1	-
12	523035606	LABEL *XPG*	1	-
12	523035605	LABEL *XP*	1	-
1	522675001	AIR FILTER ASSY *Nylon Mesh - 80 Micron Rating - Black - s/n up to - 20202600072*	1	-
1	522675002	AIR FILTER ASSY *Nylon Mesh - 44 Micron Rating - Yellow - s/n up to - 20202600072*	1	-
1	522675003	AIR FILTER ASSY *Non-Woven - White - s/n up to - 20202600072*	1	-
1	522675004	AIR FILTER ASSY *Nylon Mesh - 25 Micron Rating - Orange - s/n up to - 20202600072*	1	-
1	590458801	AIR FILTER *Nylon Mesh - 64 Micron Rating - Black - s/n from 20202600073 -*	1	-
1	590458802	AIR FILTER *Nylon Mesh - 25 Micron Rating - Yellow - s/n from 20202600073 -*	1	-
1	590458803	AIR FILTER ASSY *Non-Woven - Clear - s/n from 20202600073 -*	1	-
2	525397906	FILTER HOLDER ASSY *XPG s/n up to - 20202600072*	1	-
2	525397905	FILTER HOLDER ASSY *XP s/n up to - 20202600072*	1	-
2	597275501	FILTER HOLDER ASSY *XP s/n from 20202600073 -*	1	-
2	597275502	FILTER HOLDER ASSY *XPG s/n from 20202600073 -*	1	-
3	505176901	SHACKLE *s/n up to - 20202600072*	1	-
4	510017202	CHOKE CONTROL ASSY	1	-
5	505156201	SCREW	1	-
6	525588101	SEALING	1	-
7	503936601	PURGE	1	-

Ref.	Article N.	Description	Qty	Kit
8	574353503	SCREW ITXSCM	2	-
9	525344303	FUEL HOSE *XP s/n from 20173800688*	1	-
9	589357101	VENTILATING HOSE *s/n up to - 20154799999*	1	-
9	587645404	VENTILATING HOSE *s/n from 20154800001*	1	-
10	579194101	CARBURETTOR *s/n up to - 20121401172 (ZAMA EL44)*	1	-
10	501463307	CARBURETTOR KIT *s/n from 2012401173*	1	-
11	526818101	SCREW ITXSCM	4	-
12	505165202	FLANGE	1	-
13	503226503	SQUARE NUT	2	-
14	583964103	INLET PIPE	1	-
14	583964104	INLET PIPE *Cold resistant*	1	-
15	520290901	INTERMEDIATE WALL	1	-
16	525619201	SEALING	1	-
17	525619001	SEALING	1	-
18	523056801	FUEL HOSE	1	-
20	577536401	WIRING ASSY *s/n from 20121401173 -*	1	-
21	582025101	SUPPORT SLEEVE	1	-
22	598934501	FILTER UNIT *XP*	1	-
22	598934502	FILTER UNIT *XPG*	1	-
23	731231401	HEXAGON NUT *s/n from 20202600073 -*	1	-

SHORT BLOCK

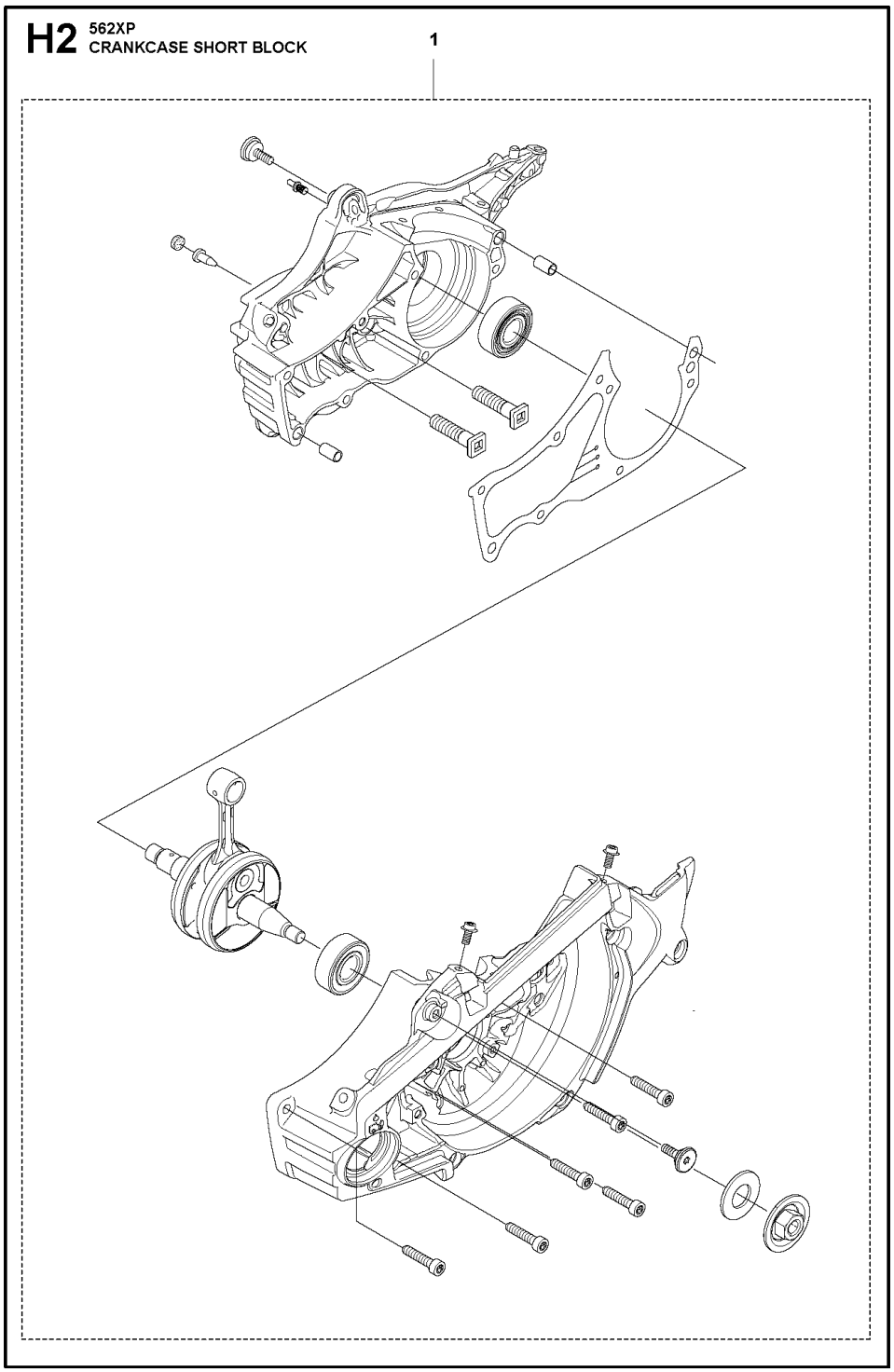

Ref.	Article N.	Description	Qty	Kit
1	575439201	TOOL -	1	-
2	522521101	COMBINATION WRENCH -	1	-
3	503558601	SPANNER -	1	-

Ref.	Article N.	Description	Qty	Kit
4	503558602	SPANNER -	1	-
5	503621201	GREASE -	1	-
6	501911401	GREASE GUN -	1	-
7	583897101	DIAGNOSTIC TOOL KIT -	1	-
8	576183401	CABLE ASSY *Diagnostics cable 14 Mhz*	1	-
9	522986502	WINTER KIT -	1	-
10	505166101	WINTER COVER -	1	-
11	503405901	WINTER PLUG -	1	-
12	503217016	SCREW CCRPANT -	2	-
13	740420100	O-RING -	2	-
14	578125501	WINTER PLUG -	1	-
15	576952201	CABLE ASSY *Diagnostics cable 8 MHz*	1	-
16	503267201	GLUE -	1	-
17	575880701	WRENCH -	1	-
1	579194101	CARBURETTOR *s/n up to - 20121401172 (ZAMA EL44)*	1	-
1	501463307	CARBURETTOR KIT	1	-
4	522517401	DIAPHRAGM	1	-
5	522517501	GASKET	1	-
6	503479701	VALVE	1	-
7	503665901	LEVER	1	-
8	537383401	SPRING	1	-
12	576414201	MAIN NOZZLE	1	-
17	503481801	SCREW	3	-
21	522517801	THROTTLE LEVER	1	-
26	503535701	STRAINER	1	-
27	537383101	DIAPHRAGM PUMP	1	-
28	537403301	DIAPHRAGM	1	-

Ref.	Article N.	Description	Qty	Kit
29	537020101	GASKET	1	-
32	503479001	SCREW	1	-
46	537177001	VALVE	1	-
50	522518901	GASKET KIT *B=set of gaskets*	1	-
51	582025101	SUPPORT SLEEVE	1	-
1	525250602	HAND GUARD -	1	-
2	526834501	SCREW -	2	-
3	577780201	BUSHING -	2	-
4	505197301	NUT -	2	-
5	525743305	CLUTCH COVER ASSY -	1	-
6	503751801	PIN -	1	-
7	526221801	SCREW CITXPANT -	5	-
8	505199301	KNEE JOINT ASSY -	1	-
9	503908301	BRAKE SPRING -	1	-
10	505199502	BRAKE BAND ASSY -	1	-
11	505201601	GUARD -	1	-
12	505199703	COVER -	1	-
14	523058001	LABEL *- up to s/n 20202399999*	1	-
15	575260402	CHAIN TENSIONER KIT -	1	-
16	740480702	O-RING -	1	-
17	503230063	WASHER -	1	-
20	537017401	BEARING SLEEVE -	1	-
22	525388701	CHAIN GUIDE -	1	-

Ref.	Article N.	Description	Qty	Kit
23	575793501	SCREW ITXPANM -	2	-
24	577975201	SPIKE OUTER -	1	-
25	503222401	LOCK NUT -	2	-
1	589809002	CLUTCH ASSY -	1	-
2	580653502	CLUTCH SPRING *s/n from 20133400001 - up to s/n 20164100192*	3	-
2	502164701	CLUTCH SPRING *s/n from 20164100193 -*	1	-
3	575261006	CLUTCH DRUM *- up to s/n 20202200048 3/8 x7*	1	-
3	575261005	CLUTCH DRUM ASSY *- up to s/n 20202200048 .325 x7*	1	-
3	575261010	CLUTCH DRUM ASSY -	1	-
4	501457402	RIM SPROCKET -	1	-
4	501598002	RIM SPROCKET *3/8x7*	1	-
5	503253401	NEEDLE BEARING -	1	-
6	577601101	WORM WHEEL *- up to s/n 20202200048*	1	-
6	586204601	WORM WHEEL *s/n from 20202200049 - 3/8*	1	-
7	505199909	OIL PUMP ASSY -	1	-
8	505200203	PUMP PISTON -	1	-
9	505200301	CASING -	1	-
10	503230060	WASHER -	2	-
11	503891601	SPRING -	1	-
12	505157001	ADJUSTMENT SCREW -	1	-
14	526818102	SCREW ITXSCM -	2	-
15	575847801	OIL HOSE	1	-

Ref.	Article N.	Description	Qty	Kit
		-		
16	504710003	OIL PLUMMET -	1	-
17	720123300	PARALLEL PIN -	2	-
18	503891501	SPRING -	1	-
19	505200101	PUMP CYLINDER -	1	-
20	503624903	SEALING PLUG -	1	-
21	598937706	CLUTCH DRUM ASSY -	1	-
1	588193901	CARBURETTOR AREA BASE	1	-
2	525755202	SCREW ITXSCFM	4	-
3	503869301	SUPPORT	2	-
4	581559201	BELLOWS	1	-
5	575380226	CRANKCASE ASSY	1	-
6	522742901	CHAIN GUIDE PLATE	1	-
7	575793501	SCREW ITXPANM	2	-
8	537403501	FILTER	1	-
9	530026119	CHECK VALVE	1	-
10	537210701	SPRING GUIDE	1	-
11	503436501	POSITION SPRING	1	-
12	505201201	CATCH	1	-
13	503751801	PIN	1	-
14	593806001	GUIDE BUSHING	2	-
15	522893801	BAR BOLT	2	-
16	525824401	SCREW ITXSCM	2	-
17	575841104	SCREW ITXSCM	6	-
18	537088301	GROMMET	1	-
19	577935201	SPIKE	1	-
20	522893901	CHAIN CATCHER	1	-
21	525798103	SCREW ITXSCFT	1	-
22	505125801	DEFLECTION LIMITER	1	-
23	595303003	SNAP LOCKING	1	-
24	588065501	AIR NOZZLE	1	-
25	526818101	SCREW ITXSCM	1	-
26	522620003	TANK CAP ASSY	1	-
27	589241101	GASKET	1	-

Ref.	Article N.	Description	Qty	Kit
28	503578901	HOLDER	1	-
29	525391201	RADIAL SEAL *- up to s/n 20202399999*	2	-
30	525887401	SCREW CITXPANT	1	-
31	575270003	GASKET KIT *A=set of gaskets*	1	-
32	525347601	BUMPER	1	-
33	577386801	CHAIN GUIDE	1	-
34	525887401	SCREW CITXPANT	1	-
35	526221801	SCREW CITXPANT	1	-
36	596911301	PROTECTIVE CAP *-up to s/n 20230403564*	1	-
1	575545215	CRANKSHAFT ASSY *- up to s/n 20202399999*	1	-
2	505133505	BALL BEARING	1	-
3	505133601	CUP	2	-
4	503256302	NEEDLE BEARING	1	-
5	525434204	BALL BEARING	2	-
6	525391201	RADIAL SEAL *- up to s/n 20202399999*	1	-
7	505416101	RADIAL SEAL	1	-
8	575545222	CRANKSHAFT ASSY *s/n from 20202400001 -*	1	-
1	587248702	CYLINDER COVER ASSY -	1	-
2	587149501	LABEL -	1	-
1	574519601	SPARK PLUG	1	-
2	582392701	SCREW	4	-
3	575276901	DECOMPRESSION VALVE	1	-
4	503552201	PLUG	1	-
5	576717602	SLEEVE	4	-
6	510164901	GASKET	1	-
7	575355805	CYLINDER ASSY *up to s/n - 201399999*	1	-
8	584807806	PISTON ASSY *up to s/n - 201399999*	1	-
9	505215701	PISTON RING *up to s/n - 20222500120*	1	-
10	737441000	SNAP RING	2	-
11	503256302	NEEDLE BEARING	1	-

Ref.	Article N.	Description	Qty	Kit
12	575270003	GASKET KIT *A=set of gaskets*	1	-
13	520291101	BUSHING	1	-
14	575355807	CYLINDER ASSY *s/n from 20141400001 -*	1	-
15	529504701	PISTON ASSY *s/n from 20141400001 -*	1	-
16	599998401	PISTON RING *s/n from 20222500121 -*	1	-
1	525887402	SCREW CITXPANT	1	-
2	504106301	HANDLE INSERT	1	-
4	575382205	FUEL TANK ASSY	1	-
5	501152901	TANK VENT ASSY	1	-
6	544099801	THROTTLE LOCKOUT	1	-
7	544099901	SPRING	1	-
8	505157701	THROTTLE	1	-
9	720182520	PARALLEL PIN	1	-
10	521887901	THROTTLE CABLE ASSY	1	-
11	525798102	SCREW ITXSCFT	1	-
12	573993503	FUEL HOSE	1	-
13	503443203	FUEL FILTER *18-40 µm (Blue)*	1	-
14	505165901	COVER *not XPW*	1	-
15	586312103	ANTIVIBRATION ELEMENT	1	-
16	505128702	ANTIVIBRATION ELEMENT	1	-
17	523085501	DEFLECTION LIMITER	1	-
18	501007601	SUPPORT	1	-
19	522620003	TANK CAP ASSY	1	-
20	589241101	GASKET	1	-
21	503578901	HOLDER	1	-
22	525798103	SCREW ITXSCFT	1	-
23	577844301	DECAL	1	-
24	529578202	FUEL HOSE ASSY *From s/n 20161000481- with magnet*	1	-
1	586146304	HANDLE SYSTEM -	1	-
2	525798103	SCREW ITXSCFT -	3	-
3	510097801	CONTACT PLATE -	1	-

Ref.	Article N.	Description	Qty	Kit
4	537252501	CONTACT PLATE -	1	-
5	525887401	SCREW CITXPANT -	1	-
6	505157403	COVER -	1	-
7	525798101	SCREW ITXSCFT -	2	-
8	505129705	ANTIVIBRATION ELEMENT -	1	-
9	505156904	FRONT HANDLE ASSY *incl. 5743863-01*	1	-
11	537088301	GROMMET -	1	-
12	576873004	SPIKE -	1	-
13	575793501	SCREW ITXPANM -	2	-
14	503222401	LOCK NUT -	2	-
15	577976301	SPIKE OUTER -	1	-
16	577976101	SPIKE -	1	-
17	525755103	SCREW ITXSCFM -	1	-
18	537024401	WEAR PROTECTION -	1	-
19	537089201	CHAIN CATCHER -	1	-
20	503222401	LOCK NUT -	1	-
1	576945104	SCREW KIT *Only screws*	1	-
2	525798103	SCREW ITXSCFT -	3	-
3	525798101	SCREW ITXSCFT -	1	-
4	505129705	ANTIVIBRATION ELEMENT -	1	-
5	505156903	FRONT HANDLE ASSY *incl. 5743863-01*	1	-
6	576873004	SPIKE	1	-

Ref.	Article N.	Description	Qty	Kit
		-		
7	575793501	SCREW ITXPANM -	2	-
8	503222401	LOCK NUT -	2	-
9	577976301	SPIKE OUTER *Spike Wrap*	1	-
10	577976101	SPIKE *Spike Wrap*	1	-
11	525755103	SCREW ITXSCFM -	1	-
12	537024401	WEAR PROTECTION -	1	-
13	537089201	CHAIN CATCHER -	1	-
14	503222401	LOCK NUT -	1	-
15	588966401	HANDLE -	1	-
1	575388905	FRONT HANDLE	1	-
2	525798103	SCREW ITXSCFT	2	-
3	525798101	SCREW ITXSCFT	3	-
4	505129705	ANTIVIBRATION ELEMENT	1	-
1	522741901	HANDLE INSERT -	1	-
2	578864601	THERMOSTAT ASSY -	1	-
3	537210801	RETAINER -	1	-
4	522611401	GENERATOR STATOR -	1	-
5	526818102	SCREW ITXSCM -	2	-
6	588168602	FOIL ELEMENT -	1	-
7	575388904	FRONT HANDLE -	1	-
8	525798103	SCREW ITXSCFT -	2	-
9	505157403	COVER -	1	-

Ref.	Article N.	Description	Qty	Kit
10	537252501	CONTACT PLATE -	1	-
11	510097801	CONTACT PLATE -	1	-
12	525887402	SCREW CITXPANT -	1	-
13	504872404	FLYWHEEL ASSY -	1	-
14	503220401	NUT -	1	-
15	503230042	WASHER -	2	-
16	501673501	SPRING -	2	-
17	501673201	PAWL -	2	-
18	506006901	SCREW -	2	-
19	505129705	ANTIVIBRATION ELEMENT -	1	-
20	525798101	SCREW ITXSCFT -	3	-
21	537088301	GROMMET -	1	-
22	582829601	THERMOSTAT ASSY *s/n up to 20164199999*	1	-
1	522795106	IGNITION MODULE ASSY *s/n up to - 20121401172 (14MHz)*	1	-
1	587306701	IGNITION MODULE *s/n from 20121401173 - (8MHz)*	1	-
2	501485404	SPARK PLUG CAP ASSY	1	-
3	525755203	SCREW ITXSCFM	2	-
4	575430601	WIRING ASSY *s/n up to - 20121401172 (14MHz)*	1	-
4	577967601	WIRING ASSY *s/n from 20121401173 - (8MHz)*	1	-
5	505178201	CABLE HOLDER	1	-
6	585321801	NUT	1	-
7	504872403	FLYWHEEL ASSY *XP*	1	-
7	504872404	FLYWHEEL ASSY *XPG*	1	-

Ref.	Article N.	Description	Qty	Kit
8	503230042	WASHER	2	-
9	501673501	SPRING	2	-
10	501673201	PAWL	2	-
11	506006901	SCREW	2	-
12	504043505	CABLE COVER	1	-
13	503238501	SHRINKAGE HOSE	2	-
14	525887401	SCREW CITXPANT	1	-
1	581914802	MUFFLER KIT -	1	-
2	724128759	SCREW CRPANM -	1	-
3	505171301	SPARK ARRESTER -	1	-
4	525825106	SCREW ITXSCM *s/n from 20133400001 -*	2	-
5	577656301	SLEEVE *s/n up to - 20133399999*	2	-
6	581918501	GASKET -	1	-
7	585178701	HEAT DEFLECTOR -	1	-
8	577902201	WASHER *s/n up to - 20133399999*	2	-
9	525762501	SCREW ITXSCM -	2	-
10	575270003	GASKET KIT *A=set of gaskets*	1	-
11	725537655	SCREW IHSCM *s/n up to - 20133399999*	2	-
1	580663714	SHORT BLOCK	1	-
1	505157501	AIR CONDUCTOR -	1	-
2	505159207	STARTER ASSY -	1	-
3	537232501	STARTER HANDLE -	1	-
4	505305125	STARTER ROPE -	1	-
5	576356601	SCREW ITXSCT -	1	-
6	537283201	SLEEVE -	1	-

Ref.	Article N.	Description	Qty	Kit
7	505158101	STARTER PULLEY ASSY -	1	-
8	525887401	SCREW CITXPANT -	2	-
9	598750301	SPRING CASSETTE ASSY -	1	-
10	525824501	SCREW CITXPANMO -	4	-
11	505159102	STARTER HOUSING -	1	-
12	523035606	LABEL *XPG*	1	-
12	523035605	LABEL *XP*	1	-
1	522675001	AIR FILTER ASSY *Nylon Mesh - 80 Micron Rating - Black - s/n up to - 20202600072*	1	-
1	522675002	AIR FILTER ASSY *Nylon Mesh - 44 Micron Rating - Yellow - s/n up to - 20202600072*	1	-
1	522675003	AIR FILTER ASSY *Non-Woven - White - s/n up to - 20202600072*	1	-
1	522675004	AIR FILTER ASSY *Nylon Mesh - 25 Micron Rating - Orange - s/n up to - 20202600072*	1	-
1	590458801	AIR FILTER *Nylon Mesh - 64 Micron Rating - Black - s/n from 20202600073 -*	1	-
1	590458802	AIR FILTER *Nylon Mesh - 25 Micron Rating - Yellow - s/n from 20202600073 -*	1	-
1	590458803	AIR FILTER ASSY *Non-Woven - Clear - s/n from 20202600073 -*	1	-
2	525397906	FILTER HOLDER ASSY *XPG s/n up to - 20202600072*	1	-
2	525397905	FILTER HOLDER ASSY *XP s/n up to - 20202600072*	1	-
2	597275501	FILTER HOLDER ASSY *XP s/n from 20202600073 -*	1	-
2	597275502	FILTER HOLDER ASSY *XPG s/n from 20202600073 -*	1	-
3	505176901	SHACKLE *s/n up to - 20202600072*	1	-
4	510017202	CHOKE CONTROL ASSY	1	-
5	505156201	SCREW	1	-
6	525588101	SEALING	1	-
7	503936601	PURGE	1	-

Ref.	Article N.	Description	Qty	Kit
8	574353503	SCREW ITXSCM	2	-
9	525344303	FUEL HOSE *XP s/n from 20173800688*	1	-
9	589357101	VENTILATING HOSE *s/n up to - 20154799999*	1	-
9	587645404	VENTILATING HOSE *s/n from 20154800001*	1	-
10	579194101	CARBURETTOR *s/n up to - 20121401172 (ZAMA EL44)*	1	-
10	501463307	CARBURETTOR KIT *s/n from 2012401173*	1	-
11	526818101	SCREW ITXSCM	4	-
12	505165202	FLANGE	1	-
13	503226503	SQUARE NUT	2	-
14	583964103	INLET PIPE	1	-
14	583964104	INLET PIPE *Cold resistant*	1	-
15	520290901	INTERMEDIATE WALL	1	-
16	525619201	SEALING	1	-
17	525619001	SEALING	1	-
18	523056801	FUEL HOSE	1	-
20	577536401	WIRING ASSY *s/n from 20121401173 -*	1	-
21	582025101	SUPPORT SLEEVE	1	-
22	598934501	FILTER UNIT *XP*	1	-
22	598934502	FILTER UNIT *XPG*	1	-
23	731231401	HEXAGON NUT *s/n from 20202600073 -*	1	-

STARTER

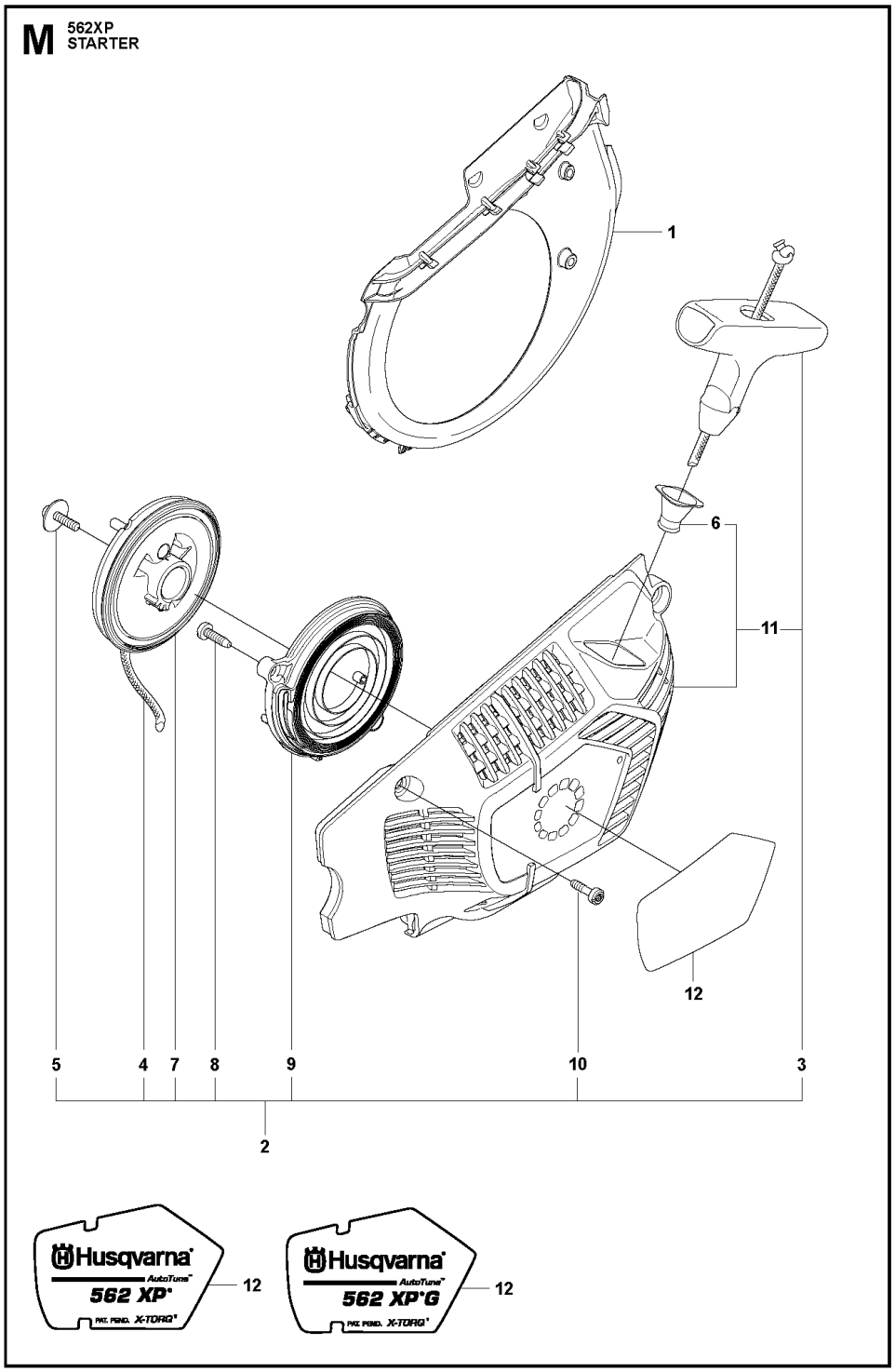

Ref.	Article N.	Description	Qty	Kit
1	575439201	TOOL -	1	-
2	522521101	COMBINATION WRENCH -	1	-
3	503558601	SPANNER -	1	-

Ref.	Article N.	Description	Qty	Kit
4	503558602	SPANNER -	1	-
5	503621201	GREASE -	1	-
6	501911401	GREASE GUN -	1	-
7	583897101	DIAGNOSTIC TOOL KIT -	1	-
8	576183401	CABLE ASSY *Diagnostics cable 14 Mhz*	1	-
9	522986502	WINTER KIT -	1	-
10	505166101	WINTER COVER -	1	-
11	503405901	WINTER PLUG -	1	-
12	503217016	SCREW CCRPANT -	2	-
13	740420100	O-RING -	2	-
14	578125501	WINTER PLUG -	1	-
15	576952201	CABLE ASSY *Diagnostics cable 8 MHz*	1	-
16	503267201	GLUE -	1	-
17	575880701	WRENCH -	1	-
1	579194101	CARBURETTOR *s/n up to - 20121401172 (ZAMA EL44)*	1	-
1	501463307	CARBURETTOR KIT	1	-
4	522517401	DIAPHRAGM	1	-
5	522517501	GASKET	1	-
6	503479701	VALVE	1	-
7	503665901	LEVER	1	-
8	537383401	SPRING	1	-
12	576414201	MAIN NOZZLE	1	-
17	503481801	SCREW	3	-
21	522517801	THROTTLE LEVER	1	-
26	503535701	STRAINER	1	-
27	537383101	DIAPHRAGM PUMP	1	-
28	537403301	DIAPHRAGM	1	-

Ref.	Article N.	Description	Qty	Kit
29	537020101	GASKET	1	-
32	503479001	SCREW	1	-
46	537177001	VALVE	1	-
50	522518901	GASKET KIT *B=set of gaskets*	1	-
51	582025101	SUPPORT SLEEVE	1	-
1	525250602	HAND GUARD -	1	-
2	526834501	SCREW -	2	-
3	577780201	BUSHING -	2	-
4	505197301	NUT -	2	-
5	525743305	CLUTCH COVER ASSY -	1	-
6	503751801	PIN -	1	-
7	526221801	SCREW CITXPANT -	5	-
8	505199301	KNEE JOINT ASSY -	1	-
9	503908301	BRAKE SPRING -	1	-
10	505199502	BRAKE BAND ASSY -	1	-
11	505201601	GUARD -	1	-
12	505199703	COVER -	1	-
14	523058001	LABEL *- up to s/n 20202399999*	1	-
15	575260402	CHAIN TENSIONER KIT -	1	-
16	740480702	O-RING -	1	-
17	503230063	WASHER -	1	-
20	537017401	BEARING SLEEVE -	1	-
22	525388701	CHAIN GUIDE -	1	-

Ref.	Article N.	Description	Qty	Kit
23	575793501	SCREW ITXPANM -	2	-
24	577975201	SPIKE OUTER -	1	-
25	503222401	LOCK NUT -	2	-
1	589809002	CLUTCH ASSY -	1	-
2	580653502	CLUTCH SPRING *s/n from 20133400001 - up to s/n 20164100192*	3	-
2	502164701	CLUTCH SPRING *s/n from 20164100193 -*	1	-
3	575261006	CLUTCH DRUM *- up to s/n 20202200048 3/8 x7*	1	-
3	575261005	CLUTCH DRUM ASSY *- up to s/n 20202200048 .325 x7*	1	-
3	575261010	CLUTCH DRUM ASSY -	1	-
4	501457402	RIM SPROCKET -	1	-
4	501598002	RIM SPROCKET *3/8x7*	1	-
5	503253401	NEEDLE BEARING -	1	-
6	577601101	WORM WHEEL *- up to s/n 20202200048*	1	-
6	586204601	WORM WHEEL *s/n from 20202200049 - 3/8*	1	-
7	505199909	OIL PUMP ASSY -	1	-
8	505200203	PUMP PISTON -	1	-
9	505200301	CASING -	1	-
10	503230060	WASHER -	2	-
11	503891601	SPRING -	1	-
12	505157001	ADJUSTMENT SCREW -	1	-
14	526818102	SCREW ITXSCM -	2	-
15	575847801	OIL HOSE	1	-

Ref.	Article N.	Description	Qty	Kit
		-		
16	504710003	OIL PLUMMET -	1	-
17	720123300	PARALLEL PIN -	2	-
18	503891501	SPRING -	1	-
19	505200101	PUMP CYLINDER -	1	-
20	503624903	SEALING PLUG -	1	-
21	598937706	CLUTCH DRUM ASSY -	1	-
1	588193901	CARBURETTOR AREA BASE	1	-
2	525755202	SCREW ITXSCFM	4	-
3	503869301	SUPPORT	2	-
4	581559201	BELLOWS	1	-
5	575380226	CRANKCASE ASSY	1	-
6	522742901	CHAIN GUIDE PLATE	1	-
7	575793501	SCREW ITXPANM	2	-
8	537403501	FILTER	1	-
9	530026119	CHECK VALVE	1	-
10	537210701	SPRING GUIDE	1	-
11	503436501	POSITION SPRING	1	-
12	505201201	CATCH	1	-
13	503751801	PIN	1	-
14	593806001	GUIDE BUSHING	2	-
15	522893801	BAR BOLT	2	-
16	525824401	SCREW ITXSCM	2	-
17	575841104	SCREW ITXSCM	6	-
18	537088301	GROMMET	1	-
19	577935201	SPIKE	1	-
20	522893901	CHAIN CATCHER	1	-
21	525798103	SCREW ITXSCFT	1	-
22	505125801	DEFLECTION LIMITER	1	-
23	595303003	SNAP LOCKING	1	-
24	588065501	AIR NOZZLE	1	-
25	526818101	SCREW ITXSCM	1	-
26	522620003	TANK CAP ASSY	1	-
27	589241101	GASKET	1	-

Ref.	Article N.	Description	Qty	Kit
28	503578901	HOLDER	1	-
29	525391201	RADIAL SEAL *- up to s/n 20202399999*	2	-
30	525887401	SCREW CITXPANT	1	-
31	575270003	GASKET KIT *A=set of gaskets*	1	-
32	525347601	BUMPER	1	-
33	577386801	CHAIN GUIDE	1	-
34	525887401	SCREW CITXPANT	1	-
35	526221801	SCREW CITXPANT	1	-
36	596911301	PROTECTIVE CAP *-up to s/n 20230403564*	1	-
1	575545215	CRANKSHAFT ASSY *- up to s/n 20202399999*	1	-
2	505133505	BALL BEARING	1	-
3	505133601	CUP	2	-
4	503256302	NEEDLE BEARING	1	-
5	525434204	BALL BEARING	2	-
6	525391201	RADIAL SEAL *- up to s/n 20202399999*	1	-
7	505416101	RADIAL SEAL	1	-
8	575545222	CRANKSHAFT ASSY *s/n from 20202400001 -*	1	-
1	587248702	CYLINDER COVER ASSY -	1	-
2	587149501	LABEL -	1	-
1	574519601	SPARK PLUG	1	-
2	582392701	SCREW	4	-
3	575276901	DECOMPRESSION VALVE	1	-
4	503552201	PLUG	1	-
5	576717602	SLEEVE	4	-
6	510164901	GASKET	1	-
7	575355805	CYLINDER ASSY *up to s/n - 201399999*	1	-
8	584807806	PISTON ASSY *up to s/n - 201399999*	1	-
9	505215701	PISTON RING *up to s/n - 20222500120*	1	-
10	737441000	SNAP RING	2	-
11	503256302	NEEDLE BEARING	1	-

Ref.	Article N.	Description	Qty	Kit
12	575270003	GASKET KIT *A=set of gaskets*	1	-
13	520291101	BUSHING	1	-
14	575355807	CYLINDER ASSY *s/n from 20141400001 -*	1	-
15	529504701	PISTON ASSY *s/n from 20141400001 -*	1	-
16	599998401	PISTON RING *s/n from 20222500121 -*	1	-
1	525887402	SCREW CITXPANT	1	-
2	504106301	HANDLE INSERT	1	-
4	575382205	FUEL TANK ASSY	1	-
5	501152901	TANK VENT ASSY	1	-
6	544099801	THROTTLE LOCKOUT	1	-
7	544099901	SPRING	1	-
8	505157701	THROTTLE	1	-
9	720182520	PARALLEL PIN	1	-
10	521887901	THROTTLE CABLE ASSY	1	-
11	525798102	SCREW ITXSCFT	1	-
12	573993503	FUEL HOSE	1	-
13	503443203	FUEL FILTER *18-40 µm (Blue)*	1	-
14	505165901	COVER *not XPW*	1	-
15	586312103	ANTIVIBRATION ELEMENT	1	-
16	505128702	ANTIVIBRATION ELEMENT	1	-
17	523085501	DEFLECTION LIMITER	1	-
18	501007601	SUPPORT	1	-
19	522620003	TANK CAP ASSY	1	-
20	589241101	GASKET	1	-
21	503578901	HOLDER	1	-
22	525798103	SCREW ITXSCFT	1	-
23	577844301	DECAL	1	-
24	529578202	FUEL HOSE ASSY *From s/n 20161000481- with magnet*	1	-
1	586146304	HANDLE SYSTEM -	1	-
2	525798103	SCREW ITXSCFT -	3	-
3	510097801	CONTACT PLATE -	1	-

Ref.	Article N.	Description	Qty	Kit
4	537252501	CONTACT PLATE -	1	-
5	525887401	SCREW CITXPANT -	1	-
6	505157403	COVER -	1	-
7	525798101	SCREW ITXSCFT -	2	-
8	505129705	ANTIVIBRATION ELEMENT -	1	-
9	505156904	FRONT HANDLE ASSY *incl. 5743863-01*	1	-
11	537088301	GROMMET -	1	-
12	576873004	SPIKE -	1	-
13	575793501	SCREW ITXPANM -	2	-
14	503222401	LOCK NUT -	2	-
15	577976301	SPIKE OUTER -	1	-
16	577976101	SPIKE -	1	-
17	525755103	SCREW ITXSCFM -	1	-
18	537024401	WEAR PROTECTION -	1	-
19	537089201	CHAIN CATCHER -	1	-
20	503222401	LOCK NUT -	1	-
1	576945104	SCREW KIT *Only screws*	1	-
2	525798103	SCREW ITXSCFT -	3	-
3	525798101	SCREW ITXSCFT -	1	-
4	505129705	ANTIVIBRATION ELEMENT -	1	-
5	505156903	FRONT HANDLE ASSY *incl. 5743863-01*	1	-
6	576873004	SPIKE	1	-

Ref.	Article N.	Description	Qty	Kit
		-		
7	575793501	SCREW ITXPANM -	2	-
8	503222401	LOCK NUT -	2	-
9	577976301	SPIKE OUTER *Spike Wrap*	1	-
10	577976101	SPIKE *Spike Wrap*	1	-
11	525755103	SCREW ITXSCFM -	1	-
12	537024401	WEAR PROTECTION -	1	-
13	537089201	CHAIN CATCHER -	1	-
14	503222401	LOCK NUT -	1	-
15	588966401	HANDLE -	1	-
1	575388905	FRONT HANDLE	1	-
2	525798103	SCREW ITXSCFT	2	-
3	525798101	SCREW ITXSCFT	3	-
4	505129705	ANTIVIBRATION ELEMENT	1	-
1	522741901	HANDLE INSERT -	1	-
2	578864601	THERMOSTAT ASSY -	1	-
3	537210801	RETAINER -	1	-
4	522611401	GENERATOR STATOR -	1	-
5	526818102	SCREW ITXSCM -	2	-
6	588168602	FOIL ELEMENT -	1	-
7	575388904	FRONT HANDLE -	1	-
8	525798103	SCREW ITXSCFT -	2	-
9	505157403	COVER -	1	-

Ref.	Article N.	Description	Qty	Kit
10	537252501	CONTACT PLATE -	1	-
11	510097801	CONTACT PLATE -	1	-
12	525887402	SCREW CITXPANT -	1	-
13	504872404	FLYWHEEL ASSY -	1	-
14	503220401	NUT -	1	-
15	503230042	WASHER -	2	-
16	501673501	SPRING -	2	-
17	501673201	PAWL -	2	-
18	506006901	SCREW -	2	-
19	505129705	ANTIVIBRATION ELEMENT -	1	-
20	525798101	SCREW ITXSCFT -	3	-
21	537088301	GROMMET -	1	-
22	582829601	THERMOSTAT ASSY *s/n up to 20164199999*	1	-
1	522795106	IGNITION MODULE ASSY *s/n up to - 20121401172 (14MHz)*	1	-
1	587306701	IGNITION MODULE *s/n from 20121401173 - (8MHz)*	1	-
2	501485404	SPARK PLUG CAP ASSY	1	-
3	525755203	SCREW ITXSCFM	2	-
4	575430601	WIRING ASSY *s/n up to - 20121401172 (14MHz)*	1	-
4	577967601	WIRING ASSY *s/n from 20121401173 - (8MHz)*	1	-
5	505178201	CABLE HOLDER	1	-
6	585321801	NUT	1	-
7	504872403	FLYWHEEL ASSY *XP*	1	-
7	504872404	FLYWHEEL ASSY *XPG*	1	-

Ref.	Article N.	Description	Qty	Kit
8	503230042	WASHER	2	-
9	501673501	SPRING	2	-
10	501673201	PAWL	2	-
11	506006901	SCREW	2	-
12	504043505	CABLE COVER	1	-
13	503238501	SHRINKAGE HOSE	2	-
14	525887401	SCREW CITXPANT	1	-
1	581914802	MUFFLER KIT -	1	-
2	724128759	SCREW CRPANM -	1	-
3	505171301	SPARK ARRESTER -	1	-
4	525825106	SCREW ITXSCM *s/n from 20133400001 -*	2	-
5	577656301	SLEEVE *s/n up to - 20133399999*	2	-
6	581918501	GASKET -	1	-
7	585178701	HEAT DEFLECTOR -	1	-
8	577902201	WASHER *s/n up to - 20133399999*	2	-
9	525762501	SCREW ITXSCM -	2	-
10	575270003	GASKET KIT *A=set of gaskets*	1	-
11	725537655	SCREW IHSCM *s/n up to - 20133399999*	2	-
1	580663714	SHORT BLOCK	1	-
1	505157501	AIR CONDUCTOR -	1	-
2	505159207	STARTER ASSY -	1	-
3	537232501	STARTER HANDLE -	1	-
4	505305125	STARTER ROPE -	1	-
5	576356601	SCREW ITXSCT -	1	-
6	537283201	SLEEVE -	1	-

Ref.	Article N.	Description	Qty	Kit
7	505158101	STARTER PULLEY ASSY -	1	-
8	525887401	SCREW CITXPANT -	2	-
9	598750301	SPRING CASSETTE ASSY -	1	-
10	525824501	SCREW CITXPANMO -	4	-
11	505159102	STARTER HOUSING -	1	-
12	523035606	LABEL *XPG*	1	-
12	523035605	LABEL *XP*	1	-
1	522675001	AIR FILTER ASSY *Nylon Mesh - 80 Micron Rating - Black - s/n up to - 20202600072*	1	-
1	522675002	AIR FILTER ASSY *Nylon Mesh - 44 Micron Rating - Yellow - s/n up to - 20202600072*	1	-
1	522675003	AIR FILTER ASSY *Non-Woven - White - s/n up to - 20202600072*	1	-
1	522675004	AIR FILTER ASSY *Nylon Mesh - 25 Micron Rating - Orange - s/n up to - 20202600072*	1	-
1	590458801	AIR FILTER *Nylon Mesh - 64 Micron Rating - Black - s/n from 20202600073 -*	1	-
1	590458802	AIR FILTER *Nylon Mesh - 25 Micron Rating - Yellow - s/n from 20202600073 -*	1	-
1	590458803	AIR FILTER ASSY *Non-Woven - Clear - s/n from 20202600073 -*	1	-
2	525397906	FILTER HOLDER ASSY *XPG s/n up to - 20202600072*	1	-
2	525397905	FILTER HOLDER ASSY *XP s/n up to - 20202600072*	1	-
2	597275501	FILTER HOLDER ASSY *XP s/n from 20202600073 -*	1	-
2	597275502	FILTER HOLDER ASSY *XPG s/n from 20202600073 -*	1	-
3	505176901	SHACKLE *s/n up to - 20202600072*	1	-
4	510017202	CHOKE CONTROL ASSY	1	-
5	505156201	SCREW	1	-
6	525588101	SEALING	1	-
7	503936601	PURGE	1	-

Ref.	Article N.	Description	Qty	Kit
8	574353503	SCREW ITXSCM	2	-
9	525344303	FUEL HOSE *XP s/n from 20173800688*	1	-
9	589357101	VENTILATING HOSE *s/n up to - 20154799999*	1	-
9	587645404	VENTILATING HOSE *s/n from 20154800001*	1	-
10	579194101	CARBURETTOR *s/n up to - 20121401172 (ZAMA EL44)*	1	-
10	501463307	CARBURETTOR KIT *s/n from 2012401173*	1	-
11	526818101	SCREW ITXSCM	4	-
12	505165202	FLANGE	1	-
13	503226503	SQUARE NUT	2	-
14	583964103	INLET PIPE	1	-
14	583964104	INLET PIPE *Cold resistant*	1	-
15	520290901	INTERMEDIATE WALL	1	-
16	525619201	SEALING	1	-
17	525619001	SEALING	1	-
18	523056801	FUEL HOSE	1	-
20	577536401	WIRING ASSY *s/n from 20121401173 -*	1	-
21	582025101	SUPPORT SLEEVE	1	-
22	598934501	FILTER UNIT *XP*	1	-
22	598934502	FILTER UNIT *XPG*	1	-
23	731231401	HEXAGON NUT *s/n from 20202600073 -*	1	-

CARBURETOR AND AIR FILTER

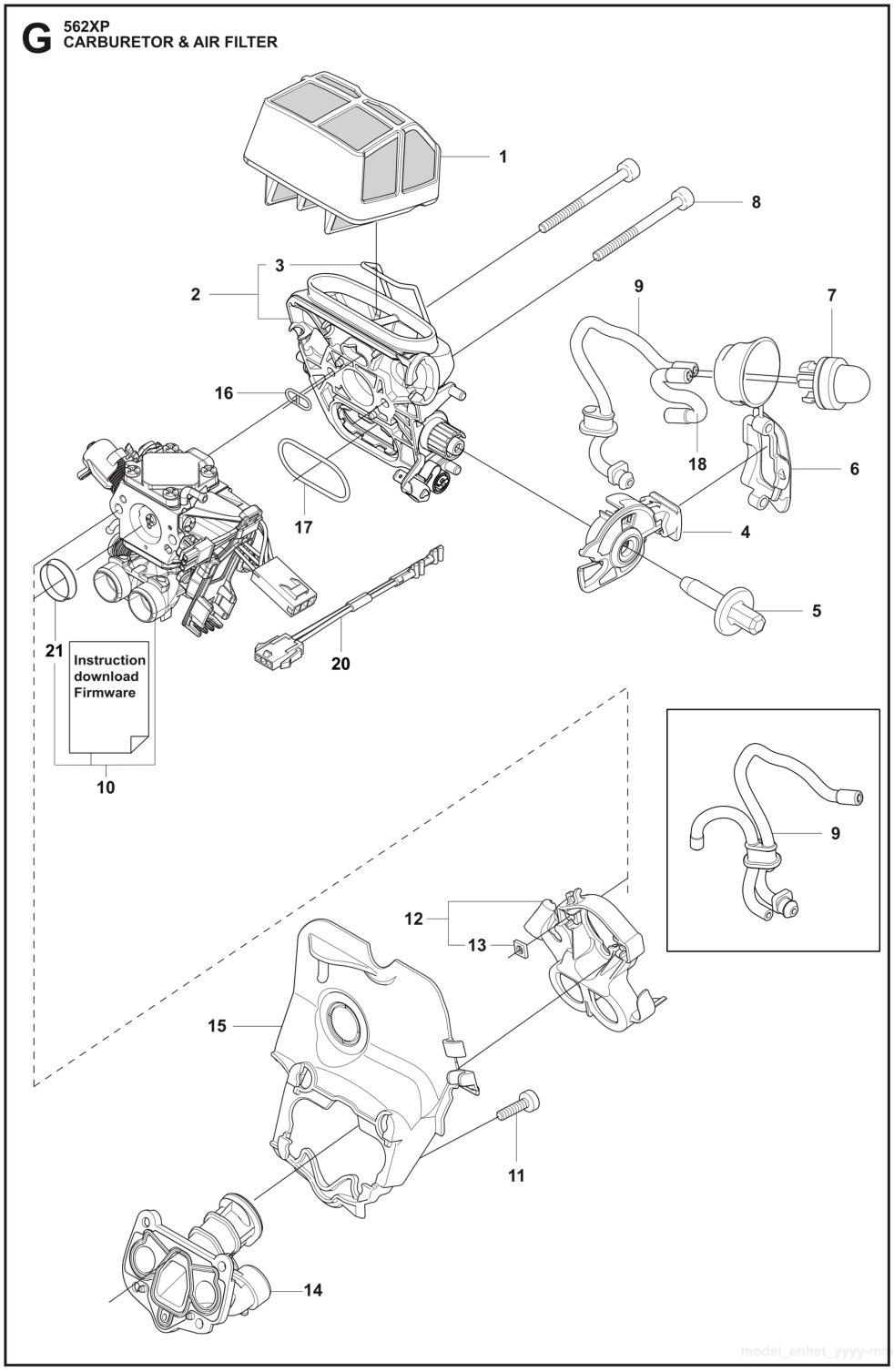

Ref.	Article N.	Description	Qty	Kit
1	575439201	TOOL -	1	-
2	522521101	COMBINATION WRENCH -	1	-
3	503558601	SPANNER -	1	-

Ref.	Article N.	Description	Qty	Kit
4	503558602	SPANNER -	1	-
5	503621201	GREASE -	1	-
6	501911401	GREASE GUN -	1	-
7	583897101	DIAGNOSTIC TOOL KIT -	1	-
8	576183401	CABLE ASSY *Diagnostics cable 14 Mhz*	1	-
9	522986502	WINTER KIT -	1	-
10	505166101	WINTER COVER -	1	-
11	503405901	WINTER PLUG -	1	-
12	503217016	SCREW CCRPANT -	2	-
13	740420100	O-RING -	2	-
14	578125501	WINTER PLUG -	1	-
15	576952201	CABLE ASSY *Diagnostics cable 8 MHz*	1	-
16	503267201	GLUE -	1	-
17	575880701	WRENCH -	1	-
1	579194101	CARBURETTOR *s/n up to - 20121401172 (ZAMA EL44)*	1	-
1	501463307	CARBURETTOR KIT	1	-
4	522517401	DIAPHRAGM	1	-
5	522517501	GASKET	1	-
6	503479701	VALVE	1	-
7	503665901	LEVER	1	-
8	537383401	SPRING	1	-
12	576414201	MAIN NOZZLE	1	-
17	503481801	SCREW	3	-
21	522517801	THROTTLE LEVER	1	-
26	503535701	STRAINER	1	-
27	537383101	DIAPHRAGM PUMP	1	-
28	537403301	DIAPHRAGM	1	-

Ref.	Article N.	Description	Qty	Kit
29	537020101	GASKET	1	-
32	503479001	SCREW	1	-
46	537177001	VALVE	1	-
50	522518901	GASKET KIT *B=set of gaskets*	1	-
51	582025101	SUPPORT SLEEVE	1	-
1	525250602	HAND GUARD -	1	-
2	526834501	SCREW -	2	-
3	577780201	BUSHING -	2	-
4	505197301	NUT -	2	-
5	525743305	CLUTCH COVER ASSY -	1	-
6	503751801	PIN -	1	-
7	526221801	SCREW CITXPANT -	5	-
8	505199301	KNEE JOINT ASSY -	1	-
9	503908301	BRAKE SPRING -	1	-
10	505199502	BRAKE BAND ASSY -	1	-
11	505201601	GUARD -	1	-
12	505199703	COVER -	1	-
14	523058001	LABEL *- up to s/n 20202399999*	1	-
15	575260402	CHAIN TENSIONER KIT -	1	-
16	740480702	O-RING -	1	-
17	503230063	WASHER -	1	-
20	537017401	BEARING SLEEVE -	1	-
22	525388701	CHAIN GUIDE -	1	-

Ref.	Article N.	Description	Qty	Kit
23	575793501	SCREW ITXPANM -	2	-
24	577975201	SPIKE OUTER -	1	-
25	503222401	LOCK NUT -	2	-
1	589809002	CLUTCH ASSY -	1	-
2	580653502	CLUTCH SPRING *s/n from 20133400001 - up to s/n 20164100192*	3	-
2	502164701	CLUTCH SPRING *s/n from 20164100193 -*	1	-
3	575261006	CLUTCH DRUM *- up to s/n 20202200048 3/8 x7*	1	-
3	575261005	CLUTCH DRUM ASSY *- up to s/n 20202200048 .325 x7*	1	-
3	575261010	CLUTCH DRUM ASSY -	1	-
4	501457402	RIM SPROCKET -	1	-
4	501598002	RIM SPROCKET *3/8x7*	1	-
5	503253401	NEEDLE BEARING -	1	-
6	577601101	WORM WHEEL *- up to s/n 20202200048*	1	-
6	586204601	WORM WHEEL *s/n from 20202200049 - 3/8*	1	-
7	505199909	OIL PUMP ASSY -	1	-
8	505200203	PUMP PISTON -	1	-
9	505200301	CASING -	1	-
10	503230060	WASHER -	2	-
11	503891601	SPRING -	1	-
12	505157001	ADJUSTMENT SCREW -	1	-
14	526818102	SCREW ITXSCM -	2	-
15	575847801	OIL HOSE	1	-

Ref.	Article N.	Description	Qty	Kit
		-		
16	504710003	OIL PLUMMET -	1	-
17	720123300	PARALLEL PIN -	2	-
18	503891501	SPRING -	1	-
19	505200101	PUMP CYLINDER -	1	-
20	503624903	SEALING PLUG -	1	-
21	598937706	CLUTCH DRUM ASSY -	1	-
1	588193901	CARBURETTOR AREA BASE	1	-
2	525755202	SCREW ITXSCFM	4	-
3	503869301	SUPPORT	2	-
4	581559201	BELLOWS	1	-
5	575380226	CRANKCASE ASSY	1	-
6	522742901	CHAIN GUIDE PLATE	1	-
7	575793501	SCREW ITXPANM	2	-
8	537403501	FILTER	1	-
9	530026119	CHECK VALVE	1	-
10	537210701	SPRING GUIDE	1	-
11	503436501	POSITION SPRING	1	-
12	505201201	CATCH	1	-
13	503751801	PIN	1	-
14	593806001	GUIDE BUSHING	2	-
15	522893801	BAR BOLT	2	-
16	525824401	SCREW ITXSCM	2	-
17	575841104	SCREW ITXSCM	6	-
18	537088301	GROMMET	1	-
19	577935201	SPIKE	1	-
20	522893901	CHAIN CATCHER	1	-
21	525798103	SCREW ITXSCFT	1	-
22	505125801	DEFLECTION LIMITER	1	-
23	595303003	SNAP LOCKING	1	-
24	588065501	AIR NOZZLE	1	-
25	526818101	SCREW ITXSCM	1	-
26	522620003	TANK CAP ASSY	1	-
27	589241101	GASKET	1	-

Ref.	Article N.	Description	Qty	Kit
28	503578901	HOLDER	1	-
29	525391201	RADIAL SEAL *- up to s/n 20202399999*	2	-
30	525887401	SCREW CITXPANT	1	-
31	575270003	GASKET KIT *A=set of gaskets*	1	-
32	525347601	BUMPER	1	-
33	577386801	CHAIN GUIDE	1	-
34	525887401	SCREW CITXPANT	1	-
35	526221801	SCREW CITXPANT	1	-
36	596911301	PROTECTIVE CAP *-up to s/n 20230403564*	1	-
1	575545215	CRANKSHAFT ASSY *- up to s/n 20202399999*	1	-
2	505133505	BALL BEARING	1	-
3	505133601	CUP	2	-
4	503256302	NEEDLE BEARING	1	-
5	525434204	BALL BEARING	2	-
6	525391201	RADIAL SEAL *- up to s/n 20202399999*	1	-
7	505416101	RADIAL SEAL	1	-
8	575545222	CRANKSHAFT ASSY *s/n from 20202400001 -*	1	-
1	587248702	CYLINDER COVER ASSY -	1	-
2	587149501	LABEL -	1	-
1	574519601	SPARK PLUG	1	-
2	582392701	SCREW	4	-
3	575276901	DECOMPRESSION VALVE	1	-
4	503552201	PLUG	1	-
5	576717602	SLEEVE	4	-
6	510164901	GASKET	1	-
7	575355805	CYLINDER ASSY *up to s/n - 201399999*	1	-
8	584807806	PISTON ASSY *up to s/n - 201399999*	1	-
9	505215701	PISTON RING *up to s/n - 20222500120*	1	-
10	737441000	SNAP RING	2	-
11	503256302	NEEDLE BEARING	1	-

Ref.	Article N.	Description	Qty	Kit
12	575270003	GASKET KIT *A=set of gaskets*	1	-
13	520291101	BUSHING	1	-
14	575355807	CYLINDER ASSY *s/n from 20141400001 -*	1	-
15	529504701	PISTON ASSY *s/n from 20141400001 -*	1	-
16	599998401	PISTON RING *s/n from 20222500121 -*	1	-
1	525887402	SCREW CITXPANT	1	-
2	504106301	HANDLE INSERT	1	-
4	575382205	FUEL TANK ASSY	1	-
5	501152901	TANK VENT ASSY	1	-
6	544099801	THROTTLE LOCKOUT	1	-
7	544099901	SPRING	1	-
8	505157701	THROTTLE	1	-
9	720182520	PARALLEL PIN	1	-
10	521887901	THROTTLE CABLE ASSY	1	-
11	525798102	SCREW ITXSCFT	1	-
12	573993503	FUEL HOSE	1	-
13	503443203	FUEL FILTER *18-40 µm (Blue)*	1	-
14	505165901	COVER *not XPW*	1	-
15	586312103	ANTIVIBRATION ELEMENT	1	-
16	505128702	ANTIVIBRATION ELEMENT	1	-
17	523085501	DEFLECTION LIMITER	1	-
18	501007601	SUPPORT	1	-
19	522620003	TANK CAP ASSY	1	-
20	589241101	GASKET	1	-
21	503578901	HOLDER	1	-
22	525798103	SCREW ITXSCFT	1	-
23	577844301	DECAL	1	-
24	529578202	FUEL HOSE ASSY *From s/n 20161000481- with magnet*	1	-
1	586146304	HANDLE SYSTEM -	1	-
2	525798103	SCREW ITXSCFT -	3	-
3	510097801	CONTACT PLATE -	1	-

Ref.	Article N.	Description	Qty	Kit
4	537252501	CONTACT PLATE -	1	-
5	525887401	SCREW CITXPANT -	1	-
6	505157403	COVER -	1	-
7	525798101	SCREW ITXSCFT -	2	-
8	505129705	ANTIVIBRATION ELEMENT -	1	-
9	505156904	FRONT HANDLE ASSY *incl. 5743863-01*	1	-
11	537088301	GROMMET -	1	-
12	576873004	SPIKE -	1	-
13	575793501	SCREW ITXPANM -	2	-
14	503222401	LOCK NUT -	2	-
15	577976301	SPIKE OUTER -	1	-
16	577976101	SPIKE -	1	-
17	525755103	SCREW ITXSCFM -	1	-
18	537024401	WEAR PROTECTION -	1	-
19	537089201	CHAIN CATCHER -	1	-
20	503222401	LOCK NUT -	1	-
1	576945104	SCREW KIT *Only screws*	1	-
2	525798103	SCREW ITXSCFT -	3	-
3	525798101	SCREW ITXSCFT -	1	-
4	505129705	ANTIVIBRATION ELEMENT -	1	-
5	505156903	FRONT HANDLE ASSY *incl. 5743863-01*	1	-
6	576873004	SPIKE	1	-

Ref.	Article N.	Description	Qty	Kit
		-		
7	575793501	SCREW ITXPANM -	2	-
8	503222401	LOCK NUT -	2	-
9	577976301	SPIKE OUTER *Spike Wrap*	1	-
10	577976101	SPIKE *Spike Wrap*	1	-
11	525755103	SCREW ITXSCFM -	1	-
12	537024401	WEAR PROTECTION -	1	-
13	537089201	CHAIN CATCHER -	1	-
14	503222401	LOCK NUT -	1	-
15	588966401	HANDLE -	1	-
1	575388905	FRONT HANDLE	1	-
2	525798103	SCREW ITXSCFT	2	-
3	525798101	SCREW ITXSCFT	3	-
4	505129705	ANTIVIBRATION ELEMENT	1	-
1	522741901	HANDLE INSERT -	1	-
2	578864601	THERMOSTAT ASSY -	1	-
3	537210801	RETAINER -	1	-
4	522611401	GENERATOR STATOR -	1	-
5	526818102	SCREW ITXSCM -	2	-
6	588168602	FOIL ELEMENT -	1	-
7	575388904	FRONT HANDLE -	1	-
8	525798103	SCREW ITXSCFT -	2	-
9	505157403	COVER -	1	-

Ref.	Article N.	Description	Qty	Kit
10	537252501	CONTACT PLATE -	1	-
11	510097801	CONTACT PLATE -	1	-
12	525887402	SCREW CITXPANT -	1	-
13	504872404	FLYWHEEL ASSY -	1	-
14	503220401	NUT -	1	-
15	503230042	WASHER -	2	-
16	501673501	SPRING -	2	-
17	501673201	PAWL -	2	-
18	506006901	SCREW -	2	-
19	505129705	ANTIVIBRATION ELEMENT -	1	-
20	525798101	SCREW ITXSCFT -	3	-
21	537088301	GROMMET -	1	-
22	582829601	THERMOSTAT ASSY *s/n up to 20164199999*	1	-
1	522795106	IGNITION MODULE ASSY *s/n up to - 20121401172 (14MHz)*	1	-
1	587306701	IGNITION MODULE *s/n from 20121401173 - (8MHz)*	1	-
2	501485404	SPARK PLUG CAP ASSY	1	-
3	525755203	SCREW ITXSCFM	2	-
4	575430601	WIRING ASSY *s/n up to - 20121401172 (14MHz)*	1	-
4	577967601	WIRING ASSY *s/n from 20121401173 - (8MHz)*	1	-
5	505178201	CABLE HOLDER	1	-
6	585321801	NUT	1	-
7	504872403	FLYWHEEL ASSY *XP*	1	-
7	504872404	FLYWHEEL ASSY *XPG*	1	-

Ref.	Article N.	Description	Qty	Kit
8	503230042	WASHER	2	-
9	501673501	SPRING	2	-
10	501673201	PAWL	2	-
11	506006901	SCREW	2	-
12	504043505	CABLE COVER	1	-
13	503238501	SHRINKAGE HOSE	2	-
14	525887401	SCREW CITXPANT	1	-
1	581914802	MUFFLER KIT -	1	-
2	724128759	SCREW CRPANM -	1	-
3	505171301	SPARK ARRESTER -	1	-
4	525825106	SCREW ITXSCM *s/n from 20133400001 -*	2	-
5	577656301	SLEEVE *s/n up to - 20133399999*	2	-
6	581918501	GASKET -	1	-
7	585178701	HEAT DEFLECTOR -	1	-
8	577902201	WASHER *s/n up to - 20133399999*	2	-
9	525762501	SCREW ITXSCM -	2	-
10	575270003	GASKET KIT *A=set of gaskets*	1	-
11	725537655	SCREW IHSCM *s/n up to - 20133399999*	2	-
1	580663714	SHORT BLOCK	1	-
1	505157501	AIR CONDUCTOR -	1	-
2	505159207	STARTER ASSY -	1	-
3	537232501	STARTER HANDLE -	1	-
4	505305125	STARTER ROPE -	1	-
5	576356601	SCREW ITXSCT -	1	-
6	537283201	SLEEVE -	1	-

Ref.	Article N.	Description	Qty	Kit
7	505158101	STARTER PULLEY ASSY -	1	-
8	525887401	SCREW CITXPANT -	2	-
9	598750301	SPRING CASSETTE ASSY -	1	-
10	525824501	SCREW CITXPANMO -	4	-
11	505159102	STARTER HOUSING -	1	-
12	523035606	LABEL *XPG*	1	-
12	523035605	LABEL *XP*	1	-
1	522675001	AIR FILTER ASSY *Nylon Mesh - 80 Micron Rating - Black - s/n up to - 20202600072*	1	-
1	522675002	AIR FILTER ASSY *Nylon Mesh - 44 Micron Rating - Yellow - s/n up to - 20202600072*	1	-
1	522675003	AIR FILTER ASSY *Non-Woven - White - s/n up to - 20202600072*	1	-
1	522675004	AIR FILTER ASSY *Nylon Mesh - 25 Micron Rating - Orange - s/n up to - 20202600072*	1	-
1	590458801	AIR FILTER *Nylon Mesh - 64 Micron Rating - Black - s/n from 20202600073 -*	1	-
1	590458802	AIR FILTER *Nylon Mesh - 25 Micron Rating - Yellow - s/n from 20202600073 -*	1	-
1	590458803	AIR FILTER ASSY *Non-Woven - Clear - s/n from 20202600073 -*	1	-
2	525397906	FILTER HOLDER ASSY *XPG s/n up to - 20202600072*	1	-
2	525397905	FILTER HOLDER ASSY *XP s/n up to - 20202600072*	1	-
2	597275501	FILTER HOLDER ASSY *XP s/n from 20202600073 -*	1	-
2	597275502	FILTER HOLDER ASSY *XPG s/n from 20202600073 -*	1	-
3	505176901	SHACKLE *s/n up to - 20202600072*	1	-
4	510017202	CHOKE CONTROL ASSY	1	-
5	505156201	SCREW	1	-
6	525588101	SEALING	1	-
7	503936601	PURGE	1	-

Ref.	Article N.	Description	Qty	Kit
8	574353503	SCREW ITXSCM	2	-
9	525344303	FUEL HOSE *XP s/n from 20173800688*	1	-
9	589357101	VENTILATING HOSE *s/n up to - 20154799999*	1	-
9	587645404	VENTILATING HOSE *s/n from 20154800001*	1	-
10	579194101	CARBURETTOR *s/n up to - 20121401172 (ZAMA EL44)*	1	-
10	501463307	CARBURETTOR KIT *s/n from 2012401173*	1	-
11	526818101	SCREW ITXSCM	4	-
12	505165202	FLANGE	1	-
13	503226503	SQUARE NUT	2	-
14	583964103	INLET PIPE	1	-
14	583964104	INLET PIPE *Cold resistant*	1	-
15	520290901	INTERMEDIATE WALL	1	-
16	525619201	SEALING	1	-
17	525619001	SEALING	1	-
18	523056801	FUEL HOSE	1	-
20	577536401	WIRING ASSY *s/n from 20121401173 -*	1	-
21	582025101	SUPPORT SLEEVE	1	-
22	598934501	FILTER UNIT *XP*	1	-
22	598934502	FILTER UNIT *XPG*	1	-
23	731231401	HEXAGON NUT *s/n from 20202600073 -*	1	-