Product Catalog: Husqvarna/572 XP® / 572 XP® G / 572 XP® W / 572 XP® GW

CARBURETOR AND AIR FILTER

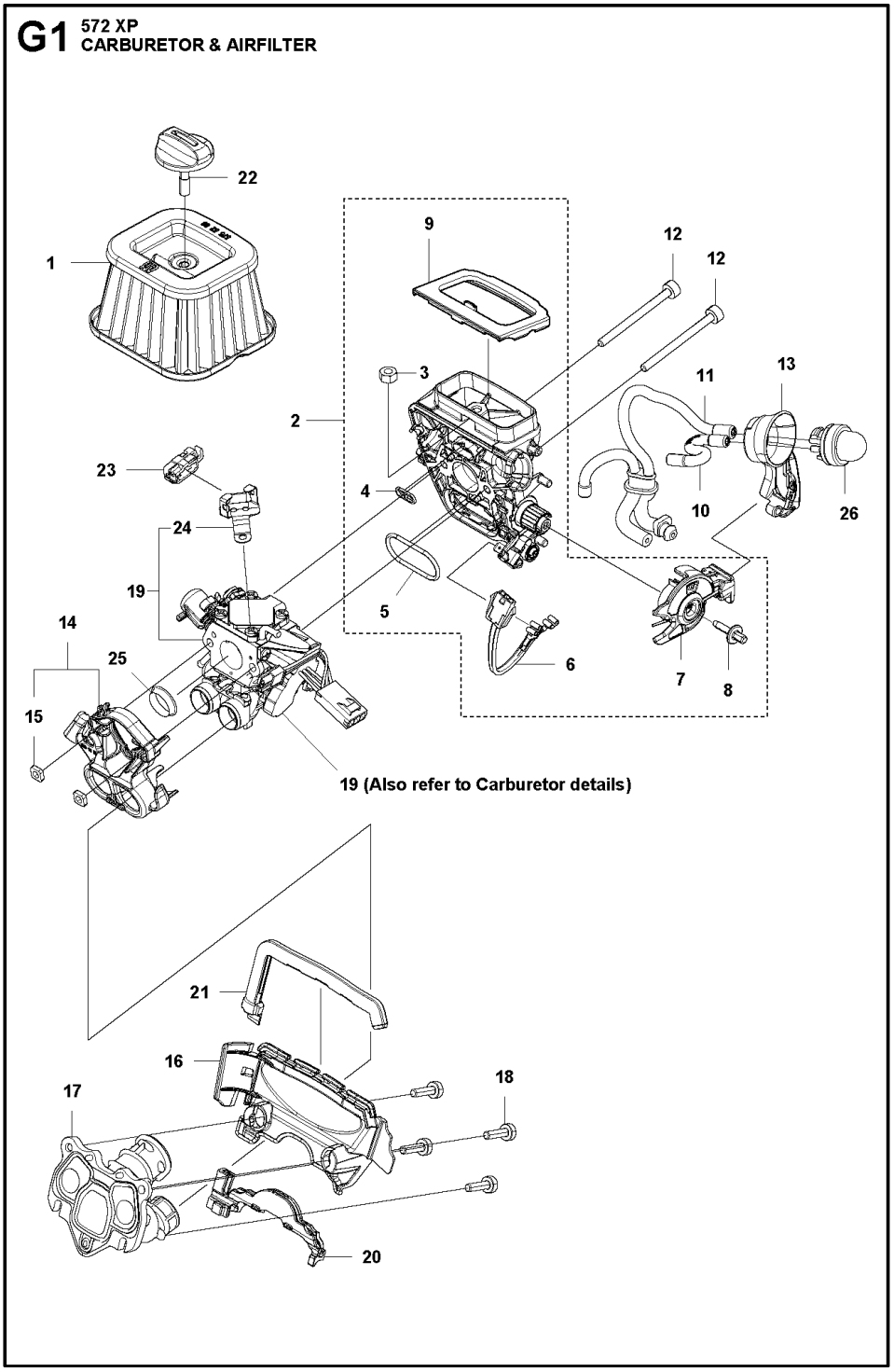

Ref.	Article N.	Description	Qty	Kit
1	596762303	AIR FILTER *Nylon Mesh - 64 Micron Rating - Black*	1	-
1	596762302	AIR FILTER *Nylon Mesh - 25 Micron Rating - Yellow*	1	-
1	596762301	AIR FILTER *Non-Woven - Clear*	1	-
2	577419005	INLET ELBOW *Std*	1	-
2	577419006	INLET ELBOW *Heated*	1	-
3	731231401	HEXAGON NUT	1	-
4	525619201	SEALING	1	-
5	525619001	SEALING	1	-
6	577536402	WIRING ASSY	1	-
7	510017202	CHOKE CONTROL ASSY	1	-
8	505156201	SCREW	1	-
9	589378401	SEALING	1	-
10	523056801	FUEL HOSE	1	-
11	525344303	FUEL HOSE	1	-
12	581143101	SCREW ITXSCFM	2	-
13	525588101	SEALING	1	-
14	505165202	FLANGE	1	-
15	503226503	SQUARE NUT	2	-
16	501182001	BAFFLE	1	-
17	575235301	INLET PIPE *Std*	1	-
17	575235302	INLET PIPE *For extrem cold conditions.*	1	-
18	526818101	SCREW ITXSCM	4	-
19	591158301	CARBURETTOR KIT *C1M-140054E*	1	-
20	582179501	SEALING	1	-
21	590059501	SEALING	1	-
22	537213205	KNOB	1	-
23	589340701	CONTACT CLAMP	1	-
24	589340601	RETAINER	1	-
25	582025101	SUPPORT SLEEVE	1	-
26	503936601	PURGE	1	-
1	591158301	CARBURETTOR KIT *C1M-140054E*	1	-

Ref.	Article N.	Description	Qty	Kit
2	522518901	GASKET KIT *GASKET KIT*	1	-
3	590191501	REPAIR KIT *Metering Kit*	1	-
4	590191601	CARBURETTOR *Throttle Lever Kit*	1	-
6	537383401	SPRING -	1	-
7	522517901	ROD -	1	-
15	522545101	SCREW -	4	-
1	576139602	HAND GUARD -	1	-
2	590105301	SCREW KIT *KIT - Screws and Bushings*	1	-
3	590110201	CHAIN BRAKE -	1	-
4	590105602	KNEE JOINT -	1	-
5	503752202	BRAKE BAND ASSY -	1	-
6	574825601	COVER -	1	-
7	582213301	SCREW -	3	-
1	577603801	CLUTCH DRUM ASSY -	1	-
2	503432001	NEEDLE HOLDER -	1	-
3	501598002	RIM SPROCKET -	1	-
4	503752401	WASHER -	1	-
5	503272101	E-CLIP -	1	-
6	586798404	CLUTCH ASSY -	1	-
7	537360601	CLUTCH SPRING -	3	-
8	582270108	PUMP PINION -	1	-
9	589028403	OIL PUMP ASSY	1	-

Ref.	Article N.	Description	Qty	Kit
		-		
10	590119703	PUMP PISTON -	1	-
11	590120101	OIL PUMP -	1	-
12	576987401	OIL PRESSURE HOSE -	1	-
13	526818102	SCREW ITXSCM -	2	-
14	588404702	OIL HOSE -	1	-
15	501544102	OIL SCREEN -	1	-
1	594907802	CLUTCH COVER ASSY *Wrap*	1	-
1	599591701	CLUTCH COVER ASSY	1	-
2	537172604	CLUTCH COVER *Wrap*	1	-
2	575236303	CLUTCH COVER	1	-
3	537174101	CHIP GUARD *Wrap*	1	-
3	575236401	CHIP GUARD	1	-
4	526221801	SCREW CITXPANT	3	-
4	525887402	SCREW CITXPANT *Wrap*	4	-
5	501517201	CHAIN GUIDE	1	-
5	537043401	CHAIN GUIDE *Wrap*	1	-
6	537016801	COVER *Wrap*	1	-
6	576424301	COVER	1	-
7	503220001	HEXAGON NUT *Wrap*	2	-
7	505197301	NUT *-up to s/n 224400900*	2	-
9	590104701	CHAIN TENSIONER KIT	1	-
10	590104801	WORM SCREW	1	-
11	590105101	WORM WHEEL	1	-
12	531012901	CHAIN BRAKE *From s/n 224400901-, 2pcs Unlosable nuts and 2pcs Snap rings*	1	-
13	531222801	SNAP RING	1	-
1	590195605	CRANKCASE ASSY	1	-

Ref.	Article N.	Description	Qty	Kit
2	537051301	BAR BOLT	2	-
3	537203001	PIN KNEE-JOINT	1	-
4	530026119	CHECK VALVE	1	-
5	537403501	FILTER	1	-
6	593806001	GUIDE BUSHING	2	-
7	522620003	TANK CAP ASSY	1	-
9	589241101	GASKET	1	-
10	503578901	HOLDER	1	-
11	575616301	CHAIN GUIDE PLATE	1	-
12	526221801	SCREW CITXPANT	1	-
13	575841104	SCREW ITXSCM	6	-
14	537377902	CHAIN CATCHER	1	-
15	525824401	SCREW ITXSCM	2	-
16	595303003	SNAP LOCKING	3	-
17	525798103	SCREW ITXSCFT	2	-
18	534114101	CARBURETTOR AREA BASE	1	-
19	583098401	FIXING WASHER	1	-
20	525755202	SCREW ITXSCFM	4	-
21	581559201	BELLOWS	1	-
22	597909701	DAMPER *Mounting*	2	-
23	589340502	AIR NOZZLE	1	-
24	574353505	SCREW ITXSCM	1	-
29	578864701	GASKET KIT	1	-
32	590261002	SPIKE *Kit - Inner Std*	1	-
33	582179601	SEALING	1	-
34	589349001	SEALING	1	-
35	590261101	GROMMET	1	-
36	582157101	GROMMET	1	-
37	589527701	GROMMET	1	-
38	501515401	SUPPORT	1	-
1	577607401	CRANKSHAFT ASSY -	1	-
2	577572401	NEEDLE BEARING -	1	-
3	587293401	BALL BEARING -	2	-
4	582812601	RADIAL SEAL -	2	-

Ref.	Article N.	Description	Qty	Kit
1	579798701	CYLINDER COVER -	1	-
1	590150305	CYLINDER ASSY *With instruction to download new Firmware*	1	-
2	547282401	PISTON ASSY *With instruction to download new Firmware*	1	-
3	576627401	PISTON RING *- up to s/n 572XPG; 20242704550, 572XP; 20242705666, Only for 576626706* *Piston assy*	2	-
3	529317601	PISTON RING *From s/n - 572XPG; 20242704551, 572XP; 20242705667, Only for 547282401* *Piston assy*	2	-
4	577572401	NEEDLE BEARING	1	-
5	737431200	SNAP RING	2	-
6	503552201	PLUG	1	-
7	584288701	DECOMPRESSION VALVE	1	-
8	503235111	SPARK PLUG	1	-
9	501811202	SCREW ITXSCM	4	-
10	589527901	SLEEVE	4	-
11	577239801	GASKET	1	-
12	578864701	GASKET KIT	1	-
1	578200701	FUEL TANK ASSY	1	-
2	501152901	TANK VENT ASSY	1	-
3	537208401	THROTTLE LOCKOUT	1	-
4	576162802	THROTTLE CABLE ASSY	1	-
5	544099901	SPRING	1	-
6	576956701	THROTTLE	1	-
7	720182520	PARALLEL PIN	1	-
8	501007601	SUPPORT	1	-
9	575010201	WEAR PROTECTION	1	-
10	523085501	DEFLECTION LIMITER	1	-
11	577062701	ANTIVIBRATION ELEMENT *Hard*	1	-
11	577062702	ANTIVIBRATION ELEMENT	1	-
12	503854103	ANTIVIBRATION ELEMENT *Hard*	1	-
12	503854104	ANTIVIBRATION ELEMENT	1	-
13	529578202	FUEL HOSE ASSY *With magnet*	1	-
14	503443201	FUEL FILTER *18-40 µm (Blue)*	1	-

Ref.	Article N.	Description	Qty	Kit
14	503443205	FUEL FILTER *18-40 µm (Blue) Mega pack (100 pcs)*	1	-
15	522620003	TANK CAP ASSY	1	-
16	589241101	GASKET	1	-
17	503578901	HOLDER	1	-
18	525887402	SCREW CITXPANT	1	-
19	537205601	COVER *H572 XP*	1	-
19	589698901	HANDLE INSERT *H572 XPG*	1	-
20	590567001	DECAL	1	-
1	579484302	FRONT HANDLE ASSY -	1	-
2	504064501	SCREW ITXPANM -	1	-
3	589699101	ANTIVIBRATION ELEMENT -	1	-
3	589699102	ANTIVIBRATION ELEMENT *Hard*	1	-
4	503226601	SQUARE NUT -	1	-
5	525798103	SCREW ITXSCFT -	3	-
6	575885703	SCREW ITXSCFM -	2	-
8	582654201	COVER -	1	-
10	537252501	CONTACT PLATE -	1	-
11	537088301	GROMMET -	1	-
12	590469101	PROTECTION -	1	-
1	579504003	FRONT HANDLE ASSY *Wrap*	1	-
2	579504002	FRONT HANDLE ASSY -	1	-
3	589699101	ANTIVIBRATION ELEMENT -	1	-
3	589699102	ANTIVIBRATION ELEMENT *Hard*	1	-
4	503226601	SQUARE NUT	1	-

Ref.	Article N.	Description	Qty	Kit
		-		
5	525798103	SCREW ITXSCFT -	3	-
6	575885703	SCREW ITXSCFM -	3	-
8	582654201	COVER -	1	-
10	537252501	CONTACT PLATE -	1	-
12	525824902	SCREW ITXSCM -	1	-
13	537331007	CLUTCH COVER ASSY -	1	-
14	503220001	HEXAGON NUT -	1	-
15	589772101	SPIKE *Kit*	1	-
16	525887402	SCREW CITXPANT -	1	-
17	503922701	SPIKE -	1	-
18	537017201	SPIKE -	1	-
19	589771301	CHAIN CATCHER -	1	-
20	537024401	WEAR PROTECTION -	1	-
21	504064501	SCREW ITXPANM -	1	-
22	590469101	PROTECTION -	1	-
23	537088301	GROMMET -	1	-
1	579504001	FRONT HANDLE ASSY -	1	-
2	504064501	SCREW ITXPANM -	1	-
3	575015301	ANTIVIBRATION ELEMENT -	0	-
3	575015303	ANTIVIBRATION ELEMENT *Hard*	1	-
4	503226601	SQUARE NUT -	1	-

Ref.	Article N.	Description	Qty	Kit
5	525798103	SCREW ITXSCFT -	3	-
6	575885703	SCREW ITXSCFM -	3	-
12	525824902	SCREW ITXSCM -	2	-
13	537331007	CLUTCH COVER ASSY -	1	-
14	503220001	HEXAGON NUT -	2	-
15	589772101	SPIKE *Kit*	1	-
16	525887402	SCREW CITXPANT -	1	-
17	503922701	SPIKE -	1	-
18	537017201	SPIKE -	1	-
19	589771301	CHAIN CATCHER -	1	-
20	537024401	WEAR PROTECTION -	1	-
1	579484303	FRONT HANDLE ASSY -	1	-
2	504064501	SCREW ITXPANM -	1	-
3	575015301	ANTIVIBRATION ELEMENT -	1	-
3	575015303	ANTIVIBRATION ELEMENT *Hard*	0	-
4	503226601	SQUARE NUT -	1	-
5	525798103	SCREW ITXSCFT -	3	-
6	575885703	SCREW ITXSCFM -	2	-
1	579484302	FRONT HANDLE ASSY -	1	-
2	504064501	SCREW ITXPANM -	1	-
3	589699101	ANTIVIBRATION ELEMENT -	1	-
3	589699102	ANTIVIBRATION ELEMENT	1	-

Ref.	Article N.	Description	Qty	Kit
		Hard		
4	503226601	SQUARE NUT -	1	-
5	525798103	SCREW ITXSCFT -	3	-
6	575885703	SCREW ITXSCFM -	2	-
8	582654201	COVER -	1	-
10	537252501	CONTACT PLATE -	1	-
11	537088301	GROMMET -	1	-
12	590688101	GENERATOR STATOR -	1	-
13	526818102	SCREW ITXSCM -	2	-
14	590688301	THERMOSTAT ASSY -	1	-
16	588168601	FOIL ELEMENT -	1	-
17	575396402	DECAL -	1	-
18	576777202	FLYWHEEL ASSY -	1	-
19	503220401	NUT -	1	-
20	590281301	PAWL *Kit*	1	-
21	589698901	HANDLE INSERT -	1	-
22	526221801	SCREW CITXPANT -	1	-
24	577419006	INLET ELBOW *Heated*	1	-
25	731231401	HEXAGON NUT -	1	-
26	589378401	SEALING -	1	-
27	525619201	SEALING -	1	-
28	525619001	SEALING -	1	-

Ref.	Article N.	Description	Qty	Kit
29	577536402	WIRING ASSY -	1	-
30	510017202	CHOKE CONTROL ASSY -	1	-
31	505156201	SCREW -	1	-
32	590469101	PROTECTION -	1	-
1	576777201	FLYWHEEL ASSY *H572 XP*	1	-
2	590281301	PAWL *Kit*	1	-
3	503220401	NUT -	1	-
4	588193102	IGNITION MODULE ASSY -	1	-
5	590298801	SPARK PLUG CAP -	1	-
6	579451801	WIRE HOLDER -	1	-
7	525824902	SCREW ITXSCM -	2	-
1	587217801	MUFFLER KIT -	1	-
2	585390001	SPARK ARRESTER -	1	-
3	724128759	SCREW CRPANM -	1	-
4	525825106	SCREW ITXSCM -	2	-
5	587351001	HEAT DEFLECTOR -	1	-
6	587350901	GASKET -	1	-
7	578864701	GASKET KIT -	1	-
8	525762503	SCREW ITXSCM -	2	-
1	582752008	CRANKCASE ASSY	1	-
1	575527604	STARTER HOUSING	1	-
2	598750301	SPRING CASSETTE ASSY	1	-
3	525887401	SCREW CITXPANT	2	-

Ref.	Article N.	Description	Qty	Kit
4	531314801	STARTER PULLEY ASSY	1	-
5	576356601	SCREW ITXSCT	1	-
6	505305125	STARTER ROPE	1	-
7	537232501	STARTER HANDLE	1	-
8	525824501	SCREW CITXPANMO	4	-
9	575525802	STARTER HOUSING	1	-
10	537283201	SLEEVE	1	-
11	575396401	DECAL *H572 XP*	1	-
12	575396402	DECAL *H572 XPG*	1	-
13	575525201	BAFFLE	1	-
1	503558513	TOOL -	1	-
2	501691701	COMBINATION WRENCH -	1	-
3	575880701	WRENCH -	1	-
4	583897101	DIAGNOSTIC TOOL KIT -	1	-
5	576183401	CABLE ASSY -	1	-
6	576952201	CABLE ASSY -	1	-
7	575527501	WINTER KIT -	1	-
8	576162601	WINTER COVER -	1	-
9	503217016	SCREW CCRPANT -	2	-
10	740420100	O-RING -	2	-
11	590261001	SPIKE *Outer, std*	1	-
12	575236501	SPIKE -	1	-
13	503222401	LOCK NUT -	2	-
14	525755202	SCREW ITXSCFM -	2	-
15	589772101	SPIKE -	1	-

Ref.	Article N.	Description	Qty	Kit
16	589771301	CHAIN CATCHER -	1	-
17	537024401	WEAR PROTECTION -	1	-
18	537017201	SPIKE -	1	-
19	503922701	SPIKE -	1	-
20	525887402	SCREW CITXPANT -	1	-
21	525824902	SCREW ITXSCM -	2	-
22	503220001	HEXAGON NUT -	2	-

CARBURETOR DETAILS

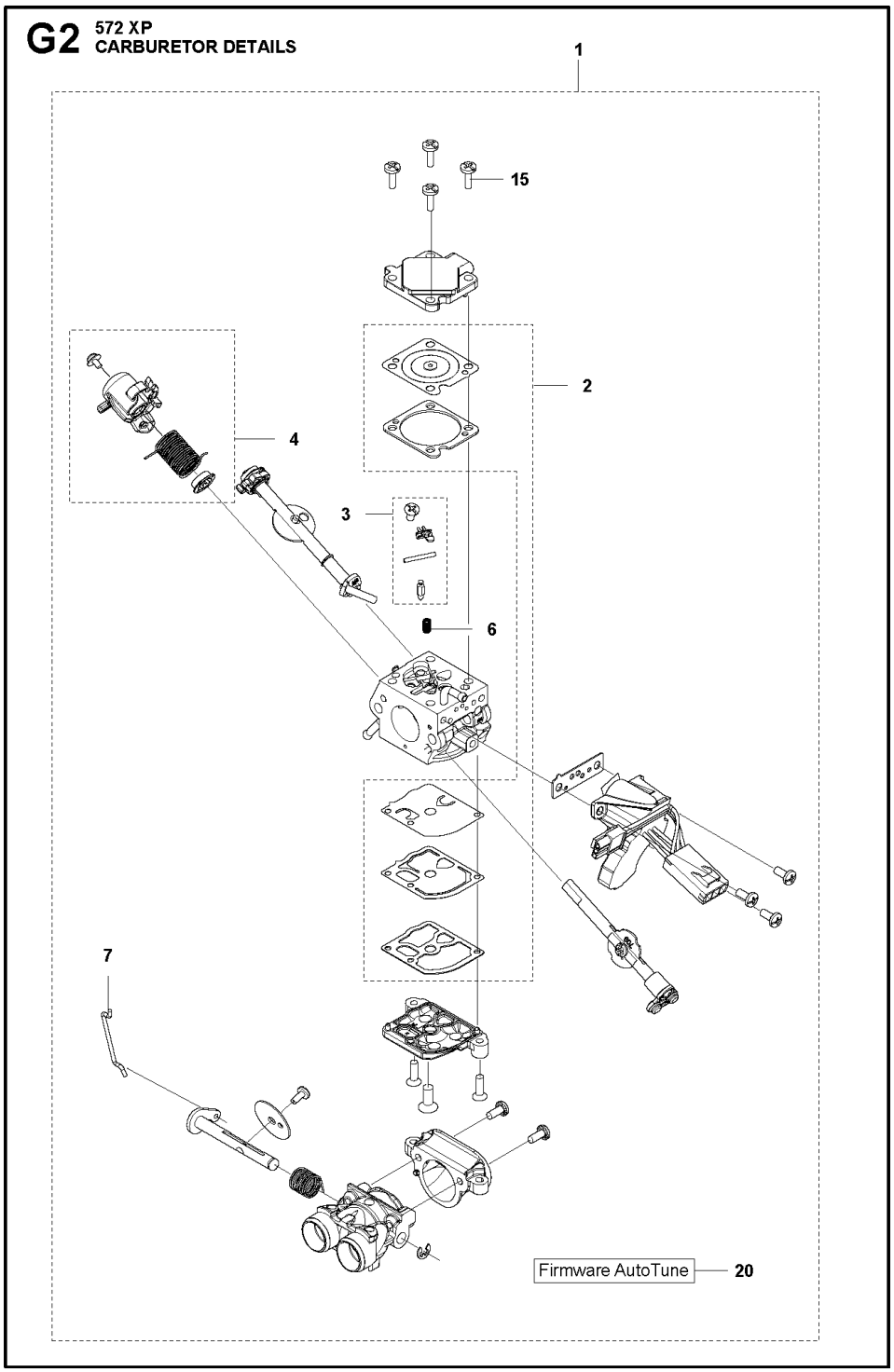

Ref.	Article N.	Description	Qty	Kit
1	596762303	AIR FILTER *Nylon Mesh - 64 Micron Rating - Black*	1	-
1	596762302	AIR FILTER *Nylon Mesh - 25 Micron Rating - Yellow*	1	-
1	596762301	AIR FILTER *Non-Woven - Clear*	1	-

Ref.	Article N.	Description	Qty	Kit
2	577419005	INLET ELBOW *Std*	1	-
2	577419006	INLET ELBOW *Heated*	1	-
3	731231401	HEXAGON NUT	1	-
4	525619201	SEALING	1	-
5	525619001	SEALING	1	-
6	577536402	WIRING ASSY	1	-
7	510017202	CHOKE CONTROL ASSY	1	-
8	505156201	SCREW	1	-
9	589378401	SEALING	1	-
10	523056801	FUEL HOSE	1	-
11	525344303	FUEL HOSE	1	-
12	581143101	SCREW ITXSCFM	2	-
13	525588101	SEALING	1	-
14	505165202	FLANGE	1	-
15	503226503	SQUARE NUT	2	-
16	501182001	BAFFLE	1	-
17	575235301	INLET PIPE *Std*	1	-
17	575235302	INLET PIPE *For extrem cold conditions.*	1	-
18	526818101	SCREW ITXSCM	4	-
19	591158301	CARBURETTOR KIT *C1M-140054E*	1	-
20	582179501	SEALING	1	-
21	590059501	SEALING	1	-
22	537213205	KNOB	1	-
23	589340701	CONTACT CLAMP	1	-
24	589340601	RETAINER	1	-
25	582025101	SUPPORT SLEEVE	1	-
26	503936601	PURGE	1	-
1	591158301	CARBURETTOR KIT *C1M-140054E*	1	-
2	522518901	GASKET KIT *GASKET KIT*	1	-
3	590191501	REPAIR KIT *Metering Kit*	1	-
4	590191601	CARBURETTOR *Throttle Lever Kit*	1	-

Ref.	Article N.	Description	Qty	Kit
6	537383401	SPRING -	1	-
7	522517901	ROD -	1	-
15	522545101	SCREW -	4	-
1	576139602	HAND GUARD -	1	-
2	590105301	SCREW KIT *KIT - Screws and Bushings*	1	-
3	590110201	CHAIN BRAKE -	1	-
4	590105602	KNEE JOINT -	1	-
5	503752202	BRAKE BAND ASSY -	1	-
6	574825601	COVER -	1	-
7	582213301	SCREW -	3	-
1	577603801	CLUTCH DRUM ASSY -	1	-
2	503432001	NEEDLE HOLDER -	1	-
3	501598002	RIM SPROCKET -	1	-
4	503752401	WASHER -	1	-
5	503272101	E-CLIP -	1	-
6	586798404	CLUTCH ASSY -	1	-
7	537360601	CLUTCH SPRING -	3	-
8	582270108	PUMP PINION -	1	-
9	589028403	OIL PUMP ASSY -	1	-
10	590119703	PUMP PISTON -	1	-
11	590120101	OIL PUMP -	1	-
12	576987401	OIL PRESSURE HOSE	1	-

Ref.	Article N.	Description	Qty	Kit
		-		
13	526818102	SCREW ITXSCM -	2	-
14	588404702	OIL HOSE -	1	-
15	501544102	OIL SCREEN -	1	-
1	594907802	CLUTCH COVER ASSY *Wrap*	1	-
1	599591701	CLUTCH COVER ASSY	1	-
2	537172604	CLUTCH COVER *Wrap*	1	-
2	575236303	CLUTCH COVER	1	-
3	537174101	CHIP GUARD *Wrap*	1	-
3	575236401	CHIP GUARD	1	-
4	526221801	SCREW CITXPANT	3	-
4	525887402	SCREW CITXPANT *Wrap*	4	-
5	501517201	CHAIN GUIDE	1	-
5	537043401	CHAIN GUIDE *Wrap*	1	-
6	537016801	COVER *Wrap*	1	-
6	576424301	COVER	1	-
7	503220001	HEXAGON NUT *Wrap*	2	-
7	505197301	NUT *-up to s/n 224400900*	2	-
9	590104701	CHAIN TENSIONER KIT	1	-
10	590104801	WORM SCREW	1	-
11	590105101	WORM WHEEL	1	-
12	531012901	CHAIN BRAKE *From s/n 224400901-, 2pcs Unlosable nuts and 2pcs Snap rings*	1	-
13	531222801	SNAP RING	1	-
1	590195605	CRANKCASE ASSY	1	-
2	537051301	BAR BOLT	2	-
3	537203001	PIN KNEE-JOINT	1	-
4	530026119	CHECK VALVE	1	-
5	537403501	FILTER	1	-
6	593806001	GUIDE BUSHING	2	-

Ref.	Article N.	Description	Qty	Kit
7	522620003	TANK CAP ASSY	1	-
9	589241101	GASKET	1	-
10	503578901	HOLDER	1	-
11	575616301	CHAIN GUIDE PLATE	1	-
12	526221801	SCREW CITXPANT	1	-
13	575841104	SCREW ITXSCM	6	-
14	537377902	CHAIN CATCHER	1	-
15	525824401	SCREW ITXSCM	2	-
16	595303003	SNAP LOCKING	3	-
17	525798103	SCREW ITXSCFT	2	-
18	534114101	CARBURETTOR AREA BASE	1	-
19	583098401	FIXING WASHER	1	-
20	525755202	SCREW ITXSCFM	4	-
21	581559201	BELLOWS	1	-
22	597909701	DAMPER *Mounting*	2	-
23	589340502	AIR NOZZLE	1	-
24	574353505	SCREW ITXSCM	1	-
29	578864701	GASKET KIT	1	-
32	590261002	SPIKE *Kit - Inner Std*	1	-
33	582179601	SEALING	1	-
34	589349001	SEALING	1	-
35	590261101	GROMMET	1	-
36	582157101	GROMMET	1	-
37	589527701	GROMMET	1	-
38	501515401	SUPPORT	1	-
1	577607401	CRANKSHAFT ASSY -	1	-
2	577572401	NEEDLE BEARING -	1	-
3	587293401	BALL BEARING -	2	-
4	582812601	RADIAL SEAL -	2	-
1	579798701	CYLINDER COVER -	1	-
1	590150305	CYLINDER ASSY *With instruction to download new Firmware*	1	-
2	547282401	PISTON ASSY	1	-

Ref.	Article N.	Description	Qty	Kit
		With instruction to download new Firmware		
3	576627401	PISTON RING *- up to s/n 572XPG; 20242704550, 572XP; 20242705666, Only for 576626706* *Piston assy*	2	-
3	529317601	PISTON RING *From s/n - 572XPG; 20242704551, 572XP; 20242705667, Only for 547282401* *Piston assy*	2	-
4	577572401	NEEDLE BEARING	1	-
5	737431200	SNAP RING	2	-
6	503552201	PLUG	1	-
7	584288701	DECOMPRESSION VALVE	1	-
8	503235111	SPARK PLUG	1	-
9	501811202	SCREW ITXSCM	4	-
10	589527901	SLEEVE	4	-
11	577239801	GASKET	1	-
12	578864701	GASKET KIT	1	-
1	578200701	FUEL TANK ASSY	1	-
2	501152901	TANK VENT ASSY	1	-
3	537208401	THROTTLE LOCKOUT	1	-
4	576162802	THROTTLE CABLE ASSY	1	-
5	544099901	SPRING	1	-
6	576956701	THROTTLE	1	-
7	720182520	PARALLEL PIN	1	-
8	501007601	SUPPORT	1	-
9	575010201	WEAR PROTECTION	1	-
10	523085501	DEFLECTION LIMITER	1	-
11	577062701	ANTIVIBRATION ELEMENT *Hard*	1	-
11	577062702	ANTIVIBRATION ELEMENT	1	-
12	503854103	ANTIVIBRATION ELEMENT *Hard*	1	-
12	503854104	ANTIVIBRATION ELEMENT	1	-
13	529578202	FUEL HOSE ASSY *With magnet*	1	-
14	503443201	FUEL FILTER *18-40 µm (Blue)*	1	-
14	503443205	FUEL FILTER *18-40 µm (Blue) Mega pack (100 pcs)*	1	-
15	522620003	TANK CAP ASSY	1	-
16	589241101	GASKET	1	-

Ref.	Article N.	Description	Qty	Kit
17	503578901	HOLDER	1	-
18	525887402	SCREW CITXPANT	1	-
19	537205601	COVER *H572 XP*	1	-
19	589698901	HANDLE INSERT *H572 XPG*	1	-
20	590567001	DECAL	1	-
1	579484302	FRONT HANDLE ASSY -	1	-
2	504064501	SCREW ITXPANM -	1	-
3	589699101	ANTIVIBRATION ELEMENT -	1	-
3	589699102	ANTIVIBRATION ELEMENT *Hard*	1	-
4	503226601	SQUARE NUT -	1	-
5	525798103	SCREW ITXSCFT -	3	-
6	575885703	SCREW ITXSCFM -	2	-
8	582654201	COVER -	1	-
10	537252501	CONTACT PLATE -	1	-
11	537088301	GROMMET -	1	-
12	590469101	PROTECTION -	1	-
1	579504003	FRONT HANDLE ASSY *Wrap*	1	-
2	579504002	FRONT HANDLE ASSY -	1	-
3	589699101	ANTIVIBRATION ELEMENT -	1	-
3	589699102	ANTIVIBRATION ELEMENT *Hard*	1	-
4	503226601	SQUARE NUT -	1	-
5	525798103	SCREW ITXSCFT -	3	-
6	575885703	SCREW ITXSCFM -	3	-

Ref.	Article N.	Description	Qty	Kit
8	582654201	COVER -	1	-
10	537252501	CONTACT PLATE -	1	-
12	525824902	SCREW ITXSCM -	1	-
13	537331007	CLUTCH COVER ASSY -	1	-
14	503220001	HEXAGON NUT -	1	-
15	589772101	SPIKE *Kit*	1	-
16	525887402	SCREW CITXPANT -	1	-
17	503922701	SPIKE -	1	-
18	537017201	SPIKE -	1	-
19	589771301	CHAIN CATCHER -	1	-
20	537024401	WEAR PROTECTION -	1	-
21	504064501	SCREW ITXPANM -	1	-
22	590469101	PROTECTION -	1	-
23	537088301	GROMMET -	1	-
1	579504001	FRONT HANDLE ASSY -	1	-
2	504064501	SCREW ITXPANM -	1	-
3	575015301	ANTIVIBRATION ELEMENT -	0	-
3	575015303	ANTIVIBRATION ELEMENT *Hard*	1	-
4	503226601	SQUARE NUT -	1	-
5	525798103	SCREW ITXSCFT -	3	-
6	575885703	SCREW ITXSCFM -	3	-
12	525824902	SCREW ITXSCM	2	-

Ref.	Article N.	Description	Qty	Kit
		-		
13	537331007	CLUTCH COVER ASSY -	1	-
14	503220001	HEXAGON NUT -	2	-
15	589772101	SPIKE *Kit*	1	-
16	525887402	SCREW CITXPANT -	1	-
17	503922701	SPIKE -	1	-
18	537017201	SPIKE -	1	-
19	589771301	CHAIN CATCHER -	1	-
20	537024401	WEAR PROTECTION -	1	-
1	579484303	FRONT HANDLE ASSY -	1	-
2	504064501	SCREW ITXPANM -	1	-
3	575015301	ANTIVIBRATION ELEMENT -	1	-
3	575015303	ANTIVIBRATION ELEMENT *Hard*	0	-
4	503226601	SQUARE NUT -	1	-
5	525798103	SCREW ITXSCFT -	3	-
6	575885703	SCREW ITXSCFM -	2	-
1	579484302	FRONT HANDLE ASSY -	1	-
2	504064501	SCREW ITXPANM -	1	-
3	589699101	ANTIVIBRATION ELEMENT -	1	-
3	589699102	ANTIVIBRATION ELEMENT *Hard*	1	-
4	503226601	SQUARE NUT -	1	-
5	525798103	SCREW ITXSCFT -	3	-

Ref.	Article N.	Description	Qty	Kit
6	575885703	SCREW ITXSCFM -	2	-
8	582654201	COVER -	1	-
10	537252501	CONTACT PLATE -	1	-
11	537088301	GROMMET -	1	-
12	590688101	GENERATOR STATOR -	1	-
13	526818102	SCREW ITXSCM -	2	-
14	590688301	THERMOSTAT ASSY -	1	-
16	588168601	FOIL ELEMENT -	1	-
17	575396402	DECAL -	1	-
18	576777202	FLYWHEEL ASSY -	1	-
19	503220401	NUT -	1	-
20	590281301	PAWL *Kit*	1	-
21	589698901	HANDLE INSERT -	1	-
22	526221801	SCREW CITXPANT -	1	-
24	577419006	INLET ELBOW *Heated*	1	-
25	731231401	HEXAGON NUT -	1	-
26	589378401	SEALING -	1	-
27	525619201	SEALING -	1	-
28	525619001	SEALING -	1	-
29	577536402	WIRING ASSY -	1	-
30	510017202	CHOKE CONTROL ASSY -	1	-
31	505156201	SCREW	1	-

Ref.	Article N.	Description	Qty	Kit
		-		
32	590469101	PROTECTION -	1	-
1	576777201	FLYWHEEL ASSY *H572 XP*	1	-
2	590281301	PAWL *Kit*	1	-
3	503220401	NUT -	1	-
4	588193102	IGNITION MODULE ASSY -	1	-
5	590298801	SPARK PLUG CAP -	1	-
6	579451801	WIRE HOLDER -	1	-
7	525824902	SCREW ITXSCM -	2	-
1	587217801	MUFFLER KIT -	1	-
2	585390001	SPARK ARRESTER -	1	-
3	724128759	SCREW CRPANM -	1	-
4	525825106	SCREW ITXSCM -	2	-
5	587351001	HEAT DEFLECTOR -	1	-
6	587350901	GASKET -	1	-
7	578864701	GASKET KIT -	1	-
8	525762503	SCREW ITXSCM -	2	-
1	582752008	CRANKCASE ASSY	1	-
1	575527604	STARTER HOUSING	1	-
2	598750301	SPRING CASSETTE ASSY	1	-
3	525887401	SCREW CITXPANT	2	-
4	531314801	STARTER PULLEY ASSY	1	-
5	576356601	SCREW ITXSCT	1	-
6	505305125	STARTER ROPE	1	-
7	537232501	STARTER HANDLE	1	-
8	525824501	SCREW CITXPANMO	4	-

Ref.	Article N.	Description	Qty	Kit
9	575525802	STARTER HOUSING	1	-
10	537283201	SLEEVE	1	-
11	575396401	DECAL *H572 XP*	1	-
12	575396402	DECAL *H572 XPG*	1	-
13	575525201	BAFFLE	1	-
1	503558513	TOOL -	1	-
2	501691701	COMBINATION WRENCH -	1	-
3	575880701	WRENCH -	1	-
4	583897101	DIAGNOSTIC TOOL KIT -	1	-
5	576183401	CABLE ASSY -	1	-
6	576952201	CABLE ASSY -	1	-
7	575527501	WINTER KIT -	1	-
8	576162601	WINTER COVER -	1	-
9	503217016	SCREW CCRPANT -	2	-
10	740420100	O-RING -	2	-
11	590261001	SPIKE *Outer, std*	1	-
12	575236501	SPIKE -	1	-
13	503222401	LOCK NUT -	2	-
14	525755202	SCREW ITXSCFM -	2	-
15	589772101	SPIKE -	1	-
16	589771301	CHAIN CATCHER -	1	-
17	537024401	WEAR PROTECTION -	1	-
18	537017201	SPIKE -	1	-

Ref.	Article N.	Description	Qty	Kit
19	503922701	SPIKE -	1	-
20	525887402	SCREW CITXPANT -	1	-
21	525824902	SCREW ITXSCM -	2	-
22	503220001	HEXAGON NUT -	2	-

CHAIN BRAKE

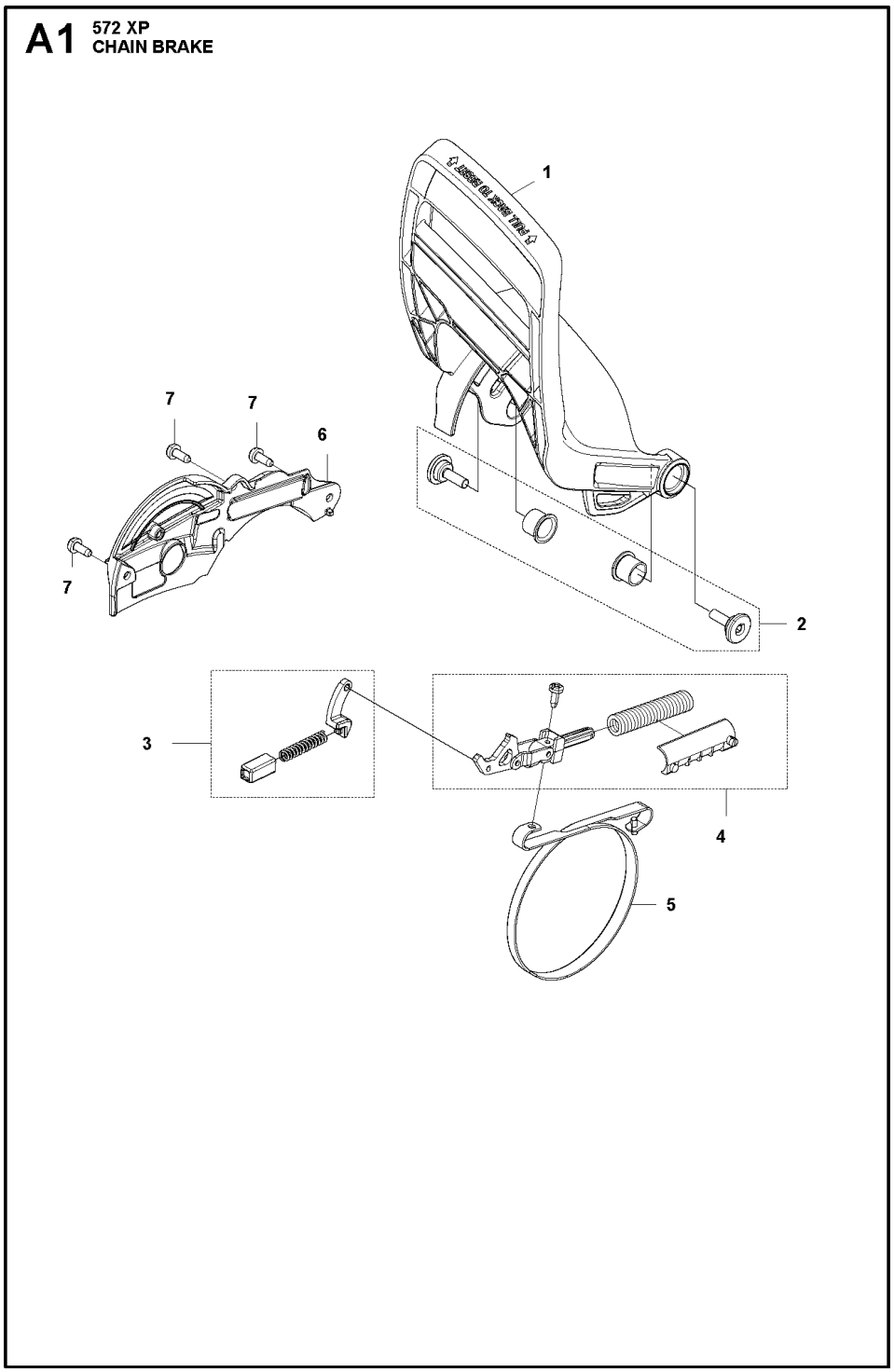

Ref.	Article N.	Description	Qty	Kit
1	596762303	AIR FILTER *Nylon Mesh - 64 Micron Rating - Black*	1	-
1	596762302	AIR FILTER *Nylon Mesh - 25 Micron Rating - Yellow*	1	-
1	596762301	AIR FILTER *Non-Woven - Clear*	1	-

Ref.	Article N.	Description	Qty	Kit
2	577419005	INLET ELBOW *Std*	1	-
2	577419006	INLET ELBOW *Heated*	1	-
3	731231401	HEXAGON NUT	1	-
4	525619201	SEALING	1	-
5	525619001	SEALING	1	-
6	577536402	WIRING ASSY	1	-
7	510017202	CHOKE CONTROL ASSY	1	-
8	505156201	SCREW	1	-
9	589378401	SEALING	1	-
10	523056801	FUEL HOSE	1	-
11	525344303	FUEL HOSE	1	-
12	581143101	SCREW ITXSCFM	2	-
13	525588101	SEALING	1	-
14	505165202	FLANGE	1	-
15	503226503	SQUARE NUT	2	-
16	501182001	BAFFLE	1	-
17	575235301	INLET PIPE *Std*	1	-
17	575235302	INLET PIPE *For extrem cold conditions.*	1	-
18	526818101	SCREW ITXSCM	4	-
19	591158301	CARBURETTOR KIT *C1M-140054E*	1	-
20	582179501	SEALING	1	-
21	590059501	SEALING	1	-
22	537213205	KNOB	1	-
23	589340701	CONTACT CLAMP	1	-
24	589340601	RETAINER	1	-
25	582025101	SUPPORT SLEEVE	1	-
26	503936601	PURGE	1	-
1	591158301	CARBURETTOR KIT *C1M-140054E*	1	-
2	522518901	GASKET KIT *GASKET KIT*	1	-
3	590191501	REPAIR KIT *Metering Kit*	1	-
4	590191601	CARBURETTOR *Throttle Lever Kit*	1	-

Ref.	Article N.	Description	Qty	Kit
6	537383401	SPRING -	1	-
7	522517901	ROD -	1	-
15	522545101	SCREW -	4	-
1	576139602	HAND GUARD -	1	-
2	590105301	SCREW KIT *KIT - Screws and Bushings*	1	-
3	590110201	CHAIN BRAKE -	1	-
4	590105602	KNEE JOINT -	1	-
5	503752202	BRAKE BAND ASSY -	1	-
6	574825601	COVER -	1	-
7	582213301	SCREW -	3	-
1	577603801	CLUTCH DRUM ASSY -	1	-
2	503432001	NEEDLE HOLDER -	1	-
3	501598002	RIM SPROCKET -	1	-
4	503752401	WASHER -	1	-
5	503272101	E-CLIP -	1	-
6	586798404	CLUTCH ASSY -	1	-
7	537360601	CLUTCH SPRING -	3	-
8	582270108	PUMP PINION -	1	-
9	589028403	OIL PUMP ASSY -	1	-
10	590119703	PUMP PISTON -	1	-
11	590120101	OIL PUMP -	1	-
12	576987401	OIL PRESSURE HOSE	1	-

Ref.	Article N.	Description	Qty	Kit
		-		
13	526818102	SCREW ITXSCM -	2	-
14	588404702	OIL HOSE -	1	-
15	501544102	OIL SCREEN -	1	-
1	594907802	CLUTCH COVER ASSY *Wrap*	1	-
1	599591701	CLUTCH COVER ASSY	1	-
2	537172604	CLUTCH COVER *Wrap*	1	-
2	575236303	CLUTCH COVER	1	-
3	537174101	CHIP GUARD *Wrap*	1	-
3	575236401	CHIP GUARD	1	-
4	526221801	SCREW CITXPANT	3	-
4	525887402	SCREW CITXPANT *Wrap*	4	-
5	501517201	CHAIN GUIDE	1	-
5	537043401	CHAIN GUIDE *Wrap*	1	-
6	537016801	COVER *Wrap*	1	-
6	576424301	COVER	1	-
7	503220001	HEXAGON NUT *Wrap*	2	-
7	505197301	NUT *-up to s/n 224400900*	2	-
9	590104701	CHAIN TENSIONER KIT	1	-
10	590104801	WORM SCREW	1	-
11	590105101	WORM WHEEL	1	-
12	531012901	CHAIN BRAKE *From s/n 224400901-, 2pcs Unlosable nuts and 2pcs Snap rings*	1	-
13	531222801	SNAP RING	1	-
1	590195605	CRANKCASE ASSY	1	-
2	537051301	BAR BOLT	2	-
3	537203001	PIN KNEE-JOINT	1	-
4	530026119	CHECK VALVE	1	-
5	537403501	FILTER	1	-
6	593806001	GUIDE BUSHING	2	-

Ref.	Article N.	Description	Qty	Kit
7	522620003	TANK CAP ASSY	1	-
9	589241101	GASKET	1	-
10	503578901	HOLDER	1	-
11	575616301	CHAIN GUIDE PLATE	1	-
12	526221801	SCREW CITXPANT	1	-
13	575841104	SCREW ITXSCM	6	-
14	537377902	CHAIN CATCHER	1	-
15	525824401	SCREW ITXSCM	2	-
16	595303003	SNAP LOCKING	3	-
17	525798103	SCREW ITXSCFT	2	-
18	534114101	CARBURETTOR AREA BASE	1	-
19	583098401	FIXING WASHER	1	-
20	525755202	SCREW ITXSCFM	4	-
21	581559201	BELLOWS	1	-
22	597909701	DAMPER *Mounting*	2	-
23	589340502	AIR NOZZLE	1	-
24	574353505	SCREW ITXSCM	1	-
29	578864701	GASKET KIT	1	-
32	590261002	SPIKE *Kit - Inner Std*	1	-
33	582179601	SEALING	1	-
34	589349001	SEALING	1	-
35	590261101	GROMMET	1	-
36	582157101	GROMMET	1	-
37	589527701	GROMMET	1	-
38	501515401	SUPPORT	1	-
1	577607401	CRANKSHAFT ASSY -	1	-
2	577572401	NEEDLE BEARING -	1	-
3	587293401	BALL BEARING -	2	-
4	582812601	RADIAL SEAL -	2	-
1	579798701	CYLINDER COVER -	1	-
1	590150305	CYLINDER ASSY *With instruction to download new Firmware*	1	-
2	547282401	PISTON ASSY	1	-

Ref.	Article N.	Description	Qty	Kit
		With instruction to download new Firmware		
3	576627401	PISTON RING *- up to s/n 572XPG; 20242704550, 572XP; 20242705666, Only for 576626706* *Piston assy*	2	-
3	529317601	PISTON RING *From s/n - 572XPG; 20242704551, 572XP; 20242705667, Only for 547282401* *Piston assy*	2	-
4	577572401	NEEDLE BEARING	1	-
5	737431200	SNAP RING	2	-
6	503552201	PLUG	1	-
7	584288701	DECOMPRESSION VALVE	1	-
8	503235111	SPARK PLUG	1	-
9	501811202	SCREW ITXSCM	4	-
10	589527901	SLEEVE	4	-
11	577239801	GASKET	1	-
12	578864701	GASKET KIT	1	-
1	578200701	FUEL TANK ASSY	1	-
2	501152901	TANK VENT ASSY	1	-
3	537208401	THROTTLE LOCKOUT	1	-
4	576162802	THROTTLE CABLE ASSY	1	-
5	544099901	SPRING	1	-
6	576956701	THROTTLE	1	-
7	720182520	PARALLEL PIN	1	-
8	501007601	SUPPORT	1	-
9	575010201	WEAR PROTECTION	1	-
10	523085501	DEFLECTION LIMITER	1	-
11	577062701	ANTIVIBRATION ELEMENT *Hard*	1	-
11	577062702	ANTIVIBRATION ELEMENT	1	-
12	503854103	ANTIVIBRATION ELEMENT *Hard*	1	-
12	503854104	ANTIVIBRATION ELEMENT	1	-
13	529578202	FUEL HOSE ASSY *With magnet*	1	-
14	503443201	FUEL FILTER *18-40 µm (Blue)*	1	-
14	503443205	FUEL FILTER *18-40 µm (Blue) Mega pack (100 pcs)*	1	-
15	522620003	TANK CAP ASSY	1	-
16	589241101	GASKET	1	-

Ref.	Article N.	Description	Qty	Kit
17	503578901	HOLDER	1	-
18	525887402	SCREW CITXPANT	1	-
19	537205601	COVER *H572 XP*	1	-
19	589698901	HANDLE INSERT *H572 XPG*	1	-
20	590567001	DECAL	1	-
1	579484302	FRONT HANDLE ASSY -	1	-
2	504064501	SCREW ITXPANM -	1	-
3	589699101	ANTIVIBRATION ELEMENT -	1	-
3	589699102	ANTIVIBRATION ELEMENT *Hard*	1	-
4	503226601	SQUARE NUT -	1	-
5	525798103	SCREW ITXSCFT -	3	-
6	575885703	SCREW ITXSCFM -	2	-
8	582654201	COVER -	1	-
10	537252501	CONTACT PLATE -	1	-
11	537088301	GROMMET -	1	-
12	590469101	PROTECTION -	1	-
1	579504003	FRONT HANDLE ASSY *Wrap*	1	-
2	579504002	FRONT HANDLE ASSY -	1	-
3	589699101	ANTIVIBRATION ELEMENT -	1	-
3	589699102	ANTIVIBRATION ELEMENT *Hard*	1	-
4	503226601	SQUARE NUT -	1	-
5	525798103	SCREW ITXSCFT -	3	-
6	575885703	SCREW ITXSCFM -	3	-

Ref.	Article N.	Description	Qty	Kit
8	582654201	COVER -	1	-
10	537252501	CONTACT PLATE -	1	-
12	525824902	SCREW ITXSCM -	1	-
13	537331007	CLUTCH COVER ASSY -	1	-
14	503220001	HEXAGON NUT -	1	-
15	589772101	SPIKE *Kit*	1	-
16	525887402	SCREW CITXPANT -	1	-
17	503922701	SPIKE -	1	-
18	537017201	SPIKE -	1	-
19	589771301	CHAIN CATCHER -	1	-
20	537024401	WEAR PROTECTION -	1	-
21	504064501	SCREW ITXPANM -	1	-
22	590469101	PROTECTION -	1	-
23	537088301	GROMMET -	1	-
1	579504001	FRONT HANDLE ASSY -	1	-
2	504064501	SCREW ITXPANM -	1	-
3	575015301	ANTIVIBRATION ELEMENT -	0	-
3	575015303	ANTIVIBRATION ELEMENT *Hard*	1	-
4	503226601	SQUARE NUT -	1	-
5	525798103	SCREW ITXSCFT -	3	-
6	575885703	SCREW ITXSCFM -	3	-
12	525824902	SCREW ITXSCM	2	-

Ref.	Article N.	Description	Qty	Kit
		-		
13	537331007	CLUTCH COVER ASSY -	1	-
14	503220001	HEXAGON NUT -	2	-
15	589772101	SPIKE *Kit*	1	-
16	525887402	SCREW CITXPANT -	1	-
17	503922701	SPIKE -	1	-
18	537017201	SPIKE -	1	-
19	589771301	CHAIN CATCHER -	1	-
20	537024401	WEAR PROTECTION -	1	-
1	579484303	FRONT HANDLE ASSY -	1	-
2	504064501	SCREW ITXPANM -	1	-
3	575015301	ANTIVIBRATION ELEMENT -	1	-
3	575015303	ANTIVIBRATION ELEMENT *Hard*	0	-
4	503226601	SQUARE NUT -	1	-
5	525798103	SCREW ITXSCFT -	3	-
6	575885703	SCREW ITXSCFM -	2	-
1	579484302	FRONT HANDLE ASSY -	1	-
2	504064501	SCREW ITXPANM -	1	-
3	589699101	ANTIVIBRATION ELEMENT -	1	-
3	589699102	ANTIVIBRATION ELEMENT *Hard*	1	-
4	503226601	SQUARE NUT -	1	-
5	525798103	SCREW ITXSCFT -	3	-

Ref.	Article N.	Description	Qty	Kit
6	575885703	SCREW ITXSCFM -	2	-
8	582654201	COVER -	1	-
10	537252501	CONTACT PLATE -	1	-
11	537088301	GROMMET -	1	-
12	590688101	GENERATOR STATOR -	1	-
13	526818102	SCREW ITXSCM -	2	-
14	590688301	THERMOSTAT ASSY -	1	-
16	588168601	FOIL ELEMENT -	1	-
17	575396402	DECAL -	1	-
18	576777202	FLYWHEEL ASSY -	1	-
19	503220401	NUT -	1	-
20	590281301	PAWL *Kit*	1	-
21	589698901	HANDLE INSERT -	1	-
22	526221801	SCREW CITXPANT -	1	-
24	577419006	INLET ELBOW *Heated*	1	-
25	731231401	HEXAGON NUT -	1	-
26	589378401	SEALING -	1	-
27	525619201	SEALING -	1	-
28	525619001	SEALING -	1	-
29	577536402	WIRING ASSY -	1	-
30	510017202	CHOKE CONTROL ASSY -	1	-
31	505156201	SCREW	1	-

Ref.	Article N.	Description	Qty	Kit
		-		
32	590469101	PROTECTION -	1	-
1	576777201	FLYWHEEL ASSY *H572 XP*	1	-
2	590281301	PAWL *Kit*	1	-
3	503220401	NUT -	1	-
4	588193102	IGNITION MODULE ASSY -	1	-
5	590298801	SPARK PLUG CAP -	1	-
6	579451801	WIRE HOLDER -	1	-
7	525824902	SCREW ITXSCM -	2	-
1	587217801	MUFFLER KIT -	1	-
2	585390001	SPARK ARRESTER -	1	-
3	724128759	SCREW CRPANM -	1	-
4	525825106	SCREW ITXSCM -	2	-
5	587351001	HEAT DEFLECTOR -	1	-
6	587350901	GASKET -	1	-
7	578864701	GASKET KIT -	1	-
8	525762503	SCREW ITXSCM -	2	-
1	582752008	CRANKCASE ASSY	1	-
1	575527604	STARTER HOUSING	1	-
2	598750301	SPRING CASSETTE ASSY	1	-
3	525887401	SCREW CITXPANT	2	-
4	531314801	STARTER PULLEY ASSY	1	-
5	576356601	SCREW ITXSCT	1	-
6	505305125	STARTER ROPE	1	-
7	537232501	STARTER HANDLE	1	-
8	525824501	SCREW CITXPANMO	4	-

Ref.	Article N.	Description	Qty	Kit
9	575525802	STARTER HOUSING	1	-
10	537283201	SLEEVE	1	-
11	575396401	DECAL *H572 XP*	1	-
12	575396402	DECAL *H572 XPG*	1	-
13	575525201	BAFFLE	1	-
1	503558513	TOOL -	1	-
2	501691701	COMBINATION WRENCH -	1	-
3	575880701	WRENCH -	1	-
4	583897101	DIAGNOSTIC TOOL KIT -	1	-
5	576183401	CABLE ASSY -	1	-
6	576952201	CABLE ASSY -	1	-
7	575527501	WINTER KIT -	1	-
8	576162601	WINTER COVER -	1	-
9	503217016	SCREW CCRPANT -	2	-
10	740420100	O-RING -	2	-
11	590261001	SPIKE *Outer, std*	1	-
12	575236501	SPIKE -	1	-
13	503222401	LOCK NUT -	2	-
14	525755202	SCREW ITXSCFM -	2	-
15	589772101	SPIKE -	1	-
16	589771301	CHAIN CATCHER -	1	-
17	537024401	WEAR PROTECTION -	1	-
18	537017201	SPIKE -	1	-

Ref.	Article N.	Description	Qty	Kit
19	503922701	SPIKE -	1	-
20	525887402	SCREW CITXPANT -	1	-
21	525824902	SCREW ITXSCM -	2	-
22	503220001	HEXAGON NUT -	2	-

CLUTCH AND OIL PUMP

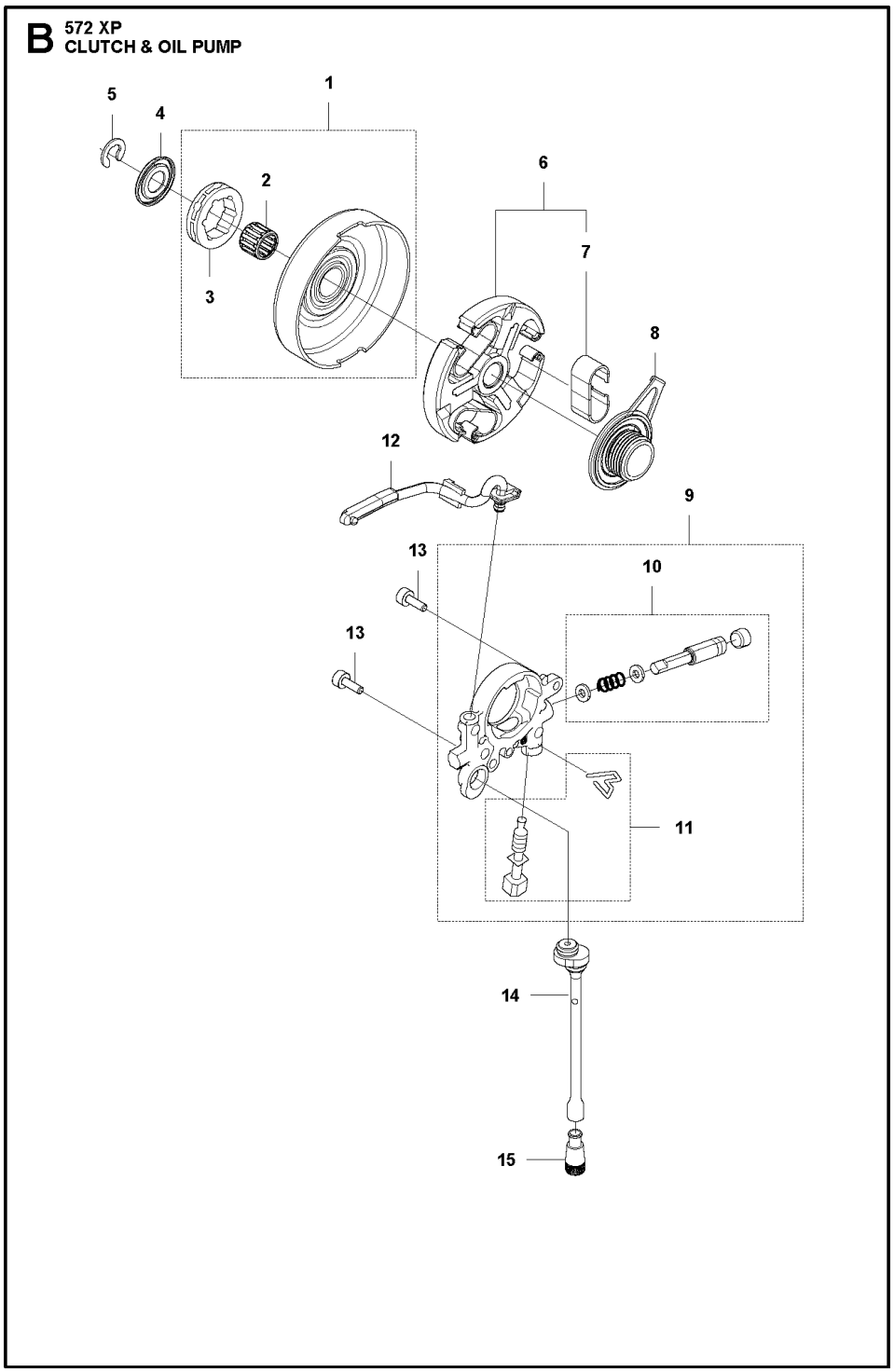

Ref.	Article N.	Description	Qty	Kit
1	596762303	AIR FILTER *Nylon Mesh - 64 Micron Rating - Black*	1	-
1	596762302	AIR FILTER *Nylon Mesh - 25 Micron Rating - Yellow*	1	-
1	596762301	AIR FILTER *Non-Woven - Clear*	1	-

Ref.	Article N.	Description	Qty	Kit
2	577419005	INLET ELBOW *Std*	1	-
2	577419006	INLET ELBOW *Heated*	1	-
3	731231401	HEXAGON NUT	1	-
4	525619201	SEALING	1	-
5	525619001	SEALING	1	-
6	577536402	WIRING ASSY	1	-
7	510017202	CHOKE CONTROL ASSY	1	-
8	505156201	SCREW	1	-
9	589378401	SEALING	1	-
10	523056801	FUEL HOSE	1	-
11	525344303	FUEL HOSE	1	-
12	581143101	SCREW ITXSCFM	2	-
13	525588101	SEALING	1	-
14	505165202	FLANGE	1	-
15	503226503	SQUARE NUT	2	-
16	501182001	BAFFLE	1	-
17	575235301	INLET PIPE *Std*	1	-
17	575235302	INLET PIPE *For extrem cold conditions.*	1	-
18	526818101	SCREW ITXSCM	4	-
19	591158301	CARBURETTOR KIT *C1M-140054E*	1	-
20	582179501	SEALING	1	-
21	590059501	SEALING	1	-
22	537213205	KNOB	1	-
23	589340701	CONTACT CLAMP	1	-
24	589340601	RETAINER	1	-
25	582025101	SUPPORT SLEEVE	1	-
26	503936601	PURGE	1	-
1	591158301	CARBURETTOR KIT *C1M-140054E*	1	-
2	522518901	GASKET KIT *GASKET KIT*	1	-
3	590191501	REPAIR KIT *Metering Kit*	1	-
4	590191601	CARBURETTOR *Throttle Lever Kit*	1	-

Ref.	Article N.	Description	Qty	Kit
6	537383401	SPRING -	1	-
7	522517901	ROD -	1	-
15	522545101	SCREW -	4	-
1	576139602	HAND GUARD -	1	-
2	590105301	SCREW KIT *KIT - Screws and Bushings*	1	-
3	590110201	CHAIN BRAKE -	1	-
4	590105602	KNEE JOINT -	1	-
5	503752202	BRAKE BAND ASSY -	1	-
6	574825601	COVER -	1	-
7	582213301	SCREW -	3	-
1	577603801	CLUTCH DRUM ASSY -	1	-
2	503432001	NEEDLE HOLDER -	1	-
3	501598002	RIM SPROCKET -	1	-
4	503752401	WASHER -	1	-
5	503272101	E-CLIP -	1	-
6	586798404	CLUTCH ASSY -	1	-
7	537360601	CLUTCH SPRING -	3	-
8	582270108	PUMP PINION -	1	-
9	589028403	OIL PUMP ASSY -	1	-
10	590119703	PUMP PISTON -	1	-
11	590120101	OIL PUMP -	1	-
12	576987401	OIL PRESSURE HOSE	1	-

Ref.	Article N.	Description	Qty	Kit
		-		
13	526818102	SCREW ITXSCM -	2	-
14	588404702	OIL HOSE -	1	-
15	501544102	OIL SCREEN -	1	-
1	594907802	CLUTCH COVER ASSY *Wrap*	1	-
1	599591701	CLUTCH COVER ASSY	1	-
2	537172604	CLUTCH COVER *Wrap*	1	-
2	575236303	CLUTCH COVER	1	-
3	537174101	CHIP GUARD *Wrap*	1	-
3	575236401	CHIP GUARD	1	-
4	526221801	SCREW CITXPANT	3	-
4	525887402	SCREW CITXPANT *Wrap*	4	-
5	501517201	CHAIN GUIDE	1	-
5	537043401	CHAIN GUIDE *Wrap*	1	-
6	537016801	COVER *Wrap*	1	-
6	576424301	COVER	1	-
7	503220001	HEXAGON NUT *Wrap*	2	-
7	505197301	NUT *-up to s/n 224400900*	2	-
9	590104701	CHAIN TENSIONER KIT	1	-
10	590104801	WORM SCREW	1	-
11	590105101	WORM WHEEL	1	-
12	531012901	CHAIN BRAKE *From s/n 224400901-, 2pcs Unlosable nuts and 2pcs Snap rings*	1	-
13	531222801	SNAP RING	1	-
1	590195605	CRANKCASE ASSY	1	-
2	537051301	BAR BOLT	2	-
3	537203001	PIN KNEE-JOINT	1	-
4	530026119	CHECK VALVE	1	-
5	537403501	FILTER	1	-
6	593806001	GUIDE BUSHING	2	-

Ref.	Article N.	Description	Qty	Kit
7	522620003	TANK CAP ASSY	1	-
9	589241101	GASKET	1	-
10	503578901	HOLDER	1	-
11	575616301	CHAIN GUIDE PLATE	1	-
12	526221801	SCREW CITXPANT	1	-
13	575841104	SCREW ITXSCM	6	-
14	537377902	CHAIN CATCHER	1	-
15	525824401	SCREW ITXSCM	2	-
16	595303003	SNAP LOCKING	3	-
17	525798103	SCREW ITXSCFT	2	-
18	534114101	CARBURETTOR AREA BASE	1	-
19	583098401	FIXING WASHER	1	-
20	525755202	SCREW ITXSCFM	4	-
21	581559201	BELLOWS	1	-
22	597909701	DAMPER *Mounting*	2	-
23	589340502	AIR NOZZLE	1	-
24	574353505	SCREW ITXSCM	1	-
29	578864701	GASKET KIT	1	-
32	590261002	SPIKE *Kit - Inner Std*	1	-
33	582179601	SEALING	1	-
34	589349001	SEALING	1	-
35	590261101	GROMMET	1	-
36	582157101	GROMMET	1	-
37	589527701	GROMMET	1	-
38	501515401	SUPPORT	1	-
1	577607401	CRANKSHAFT ASSY -	1	-
2	577572401	NEEDLE BEARING -	1	-
3	587293401	BALL BEARING -	2	-
4	582812601	RADIAL SEAL -	2	-
1	579798701	CYLINDER COVER -	1	-
1	590150305	CYLINDER ASSY *With instruction to download new Firmware*	1	-
2	547282401	PISTON ASSY	1	-

Ref.	Article N.	Description	Qty	Kit
		With instruction to download new Firmware		
3	576627401	PISTON RING *- up to s/n 572XPG; 20242704550, 572XP; 20242705666, Only for 576626706* *Piston assy*	2	-
3	529317601	PISTON RING *From s/n - 572XPG; 20242704551, 572XP; 20242705667, Only for 547282401* *Piston assy*	2	-
4	577572401	NEEDLE BEARING	1	-
5	737431200	SNAP RING	2	-
6	503552201	PLUG	1	-
7	584288701	DECOMPRESSION VALVE	1	-
8	503235111	SPARK PLUG	1	-
9	501811202	SCREW ITXSCM	4	-
10	589527901	SLEEVE	4	-
11	577239801	GASKET	1	-
12	578864701	GASKET KIT	1	-
1	578200701	FUEL TANK ASSY	1	-
2	501152901	TANK VENT ASSY	1	-
3	537208401	THROTTLE LOCKOUT	1	-
4	576162802	THROTTLE CABLE ASSY	1	-
5	544099901	SPRING	1	-
6	576956701	THROTTLE	1	-
7	720182520	PARALLEL PIN	1	-
8	501007601	SUPPORT	1	-
9	575010201	WEAR PROTECTION	1	-
10	523085501	DEFLECTION LIMITER	1	-
11	577062701	ANTIVIBRATION ELEMENT *Hard*	1	-
11	577062702	ANTIVIBRATION ELEMENT	1	-
12	503854103	ANTIVIBRATION ELEMENT *Hard*	1	-
12	503854104	ANTIVIBRATION ELEMENT	1	-
13	529578202	FUEL HOSE ASSY *With magnet*	1	-
14	503443201	FUEL FILTER *18-40 µm (Blue)*	1	-
14	503443205	FUEL FILTER *18-40 µm (Blue) Mega pack (100 pcs)*	1	-
15	522620003	TANK CAP ASSY	1	-
16	589241101	GASKET	1	-

Ref.	Article N.	Description	Qty	Kit
17	503578901	HOLDER	1	-
18	525887402	SCREW CITXPANT	1	-
19	537205601	COVER *H572 XP*	1	-
19	589698901	HANDLE INSERT *H572 XPG*	1	-
20	590567001	DECAL	1	-
1	579484302	FRONT HANDLE ASSY -	1	-
2	504064501	SCREW ITXPANM -	1	-
3	589699101	ANTIVIBRATION ELEMENT -	1	-
3	589699102	ANTIVIBRATION ELEMENT *Hard*	1	-
4	503226601	SQUARE NUT -	1	-
5	525798103	SCREW ITXSCFT -	3	-
6	575885703	SCREW ITXSCFM -	2	-
8	582654201	COVER -	1	-
10	537252501	CONTACT PLATE -	1	-
11	537088301	GROMMET -	1	-
12	590469101	PROTECTION -	1	-
1	579504003	FRONT HANDLE ASSY *Wrap*	1	-
2	579504002	FRONT HANDLE ASSY -	1	-
3	589699101	ANTIVIBRATION ELEMENT -	1	-
3	589699102	ANTIVIBRATION ELEMENT *Hard*	1	-
4	503226601	SQUARE NUT -	1	-
5	525798103	SCREW ITXSCFT -	3	-
6	575885703	SCREW ITXSCFM -	3	-

Ref.	Article N.	Description	Qty	Kit
8	582654201	COVER -	1	-
10	537252501	CONTACT PLATE -	1	-
12	525824902	SCREW ITXSCM -	1	-
13	537331007	CLUTCH COVER ASSY -	1	-
14	503220001	HEXAGON NUT -	1	-
15	589772101	SPIKE *Kit*	1	-
16	525887402	SCREW CITXPANT -	1	-
17	503922701	SPIKE -	1	-
18	537017201	SPIKE -	1	-
19	589771301	CHAIN CATCHER -	1	-
20	537024401	WEAR PROTECTION -	1	-
21	504064501	SCREW ITXPANM -	1	-
22	590469101	PROTECTION -	1	-
23	537088301	GROMMET -	1	-
1	579504001	FRONT HANDLE ASSY -	1	-
2	504064501	SCREW ITXPANM -	1	-
3	575015301	ANTIVIBRATION ELEMENT -	0	-
3	575015303	ANTIVIBRATION ELEMENT *Hard*	1	-
4	503226601	SQUARE NUT -	1	-
5	525798103	SCREW ITXSCFT -	3	-
6	575885703	SCREW ITXSCFM -	3	-
12	525824902	SCREW ITXSCM	2	-

Ref.	Article N.	Description	Qty	Kit
		-		
13	537331007	CLUTCH COVER ASSY -	1	-
14	503220001	HEXAGON NUT -	2	-
15	589772101	SPIKE *Kit*	1	-
16	525887402	SCREW CITXPANT -	1	-
17	503922701	SPIKE -	1	-
18	537017201	SPIKE -	1	-
19	589771301	CHAIN CATCHER -	1	-
20	537024401	WEAR PROTECTION -	1	-
1	579484303	FRONT HANDLE ASSY -	1	-
2	504064501	SCREW ITXPANM -	1	-
3	575015301	ANTIVIBRATION ELEMENT -	1	-
3	575015303	ANTIVIBRATION ELEMENT *Hard*	0	-
4	503226601	SQUARE NUT -	1	-
5	525798103	SCREW ITXSCFT -	3	-
6	575885703	SCREW ITXSCFM -	2	-
1	579484302	FRONT HANDLE ASSY -	1	-
2	504064501	SCREW ITXPANM -	1	-
3	589699101	ANTIVIBRATION ELEMENT -	1	-
3	589699102	ANTIVIBRATION ELEMENT *Hard*	1	-
4	503226601	SQUARE NUT -	1	-
5	525798103	SCREW ITXSCFT -	3	-

Ref.	Article N.	Description	Qty	Kit
6	575885703	SCREW ITXSCFM -	2	-
8	582654201	COVER -	1	-
10	537252501	CONTACT PLATE -	1	-
11	537088301	GROMMET -	1	-
12	590688101	GENERATOR STATOR -	1	-
13	526818102	SCREW ITXSCM -	2	-
14	590688301	THERMOSTAT ASSY -	1	-
16	588168601	FOIL ELEMENT -	1	-
17	575396402	DECAL -	1	-
18	576777202	FLYWHEEL ASSY -	1	-
19	503220401	NUT -	1	-
20	590281301	PAWL *Kit*	1	-
21	589698901	HANDLE INSERT -	1	-
22	526221801	SCREW CITXPANT -	1	-
24	577419006	INLET ELBOW *Heated*	1	-
25	731231401	HEXAGON NUT -	1	-
26	589378401	SEALING -	1	-
27	525619201	SEALING -	1	-
28	525619001	SEALING -	1	-
29	577536402	WIRING ASSY -	1	-
30	510017202	CHOKE CONTROL ASSY -	1	-
31	505156201	SCREW	1	-

Ref.	Article N.	Description	Qty	Kit
		-		
32	590469101	PROTECTION -	1	-
1	576777201	FLYWHEEL ASSY *H572 XP*	1	-
2	590281301	PAWL *Kit*	1	-
3	503220401	NUT -	1	-
4	588193102	IGNITION MODULE ASSY -	1	-
5	590298801	SPARK PLUG CAP -	1	-
6	579451801	WIRE HOLDER -	1	-
7	525824902	SCREW ITXSCM -	2	-
1	587217801	MUFFLER KIT -	1	-
2	585390001	SPARK ARRESTER -	1	-
3	724128759	SCREW CRPANM -	1	-
4	525825106	SCREW ITXSCM -	2	-
5	587351001	HEAT DEFLECTOR -	1	-
6	587350901	GASKET -	1	-
7	578864701	GASKET KIT -	1	-
8	525762503	SCREW ITXSCM -	2	-
1	582752008	CRANKCASE ASSY	1	-
1	575527604	STARTER HOUSING	1	-
2	598750301	SPRING CASSETTE ASSY	1	-
3	525887401	SCREW CITXPANT	2	-
4	531314801	STARTER PULLEY ASSY	1	-
5	576356601	SCREW ITXSCT	1	-
6	505305125	STARTER ROPE	1	-
7	537232501	STARTER HANDLE	1	-
8	525824501	SCREW CITXPANMO	4	-

Ref.	Article N.	Description	Qty	Kit
9	575525802	STARTER HOUSING	1	-
10	537283201	SLEEVE	1	-
11	575396401	DECAL *H572 XP*	1	-
12	575396402	DECAL *H572 XPG*	1	-
13	575525201	BAFFLE	1	-
1	503558513	TOOL -	1	-
2	501691701	COMBINATION WRENCH -	1	-
3	575880701	WRENCH -	1	-
4	583897101	DIAGNOSTIC TOOL KIT -	1	-
5	576183401	CABLE ASSY -	1	-
6	576952201	CABLE ASSY -	1	-
7	575527501	WINTER KIT -	1	-
8	576162601	WINTER COVER -	1	-
9	503217016	SCREW CCRPANT -	2	-
10	740420100	O-RING -	2	-
11	590261001	SPIKE *Outer, std*	1	-
12	575236501	SPIKE -	1	-
13	503222401	LOCK NUT -	2	-
14	525755202	SCREW ITXSCFM -	2	-
15	589772101	SPIKE -	1	-
16	589771301	CHAIN CATCHER -	1	-
17	537024401	WEAR PROTECTION -	1	-
18	537017201	SPIKE -	1	-

Ref.	Article N.	Description	Qty	Kit
19	503922701	SPIKE -	1	-
20	525887402	SCREW CITXPANT -	1	-
21	525824902	SCREW ITXSCM -	2	-
22	503220001	HEXAGON NUT -	2	-

CLUTCH COVER

A2 572 XP/XPG
CLUTCH COVER

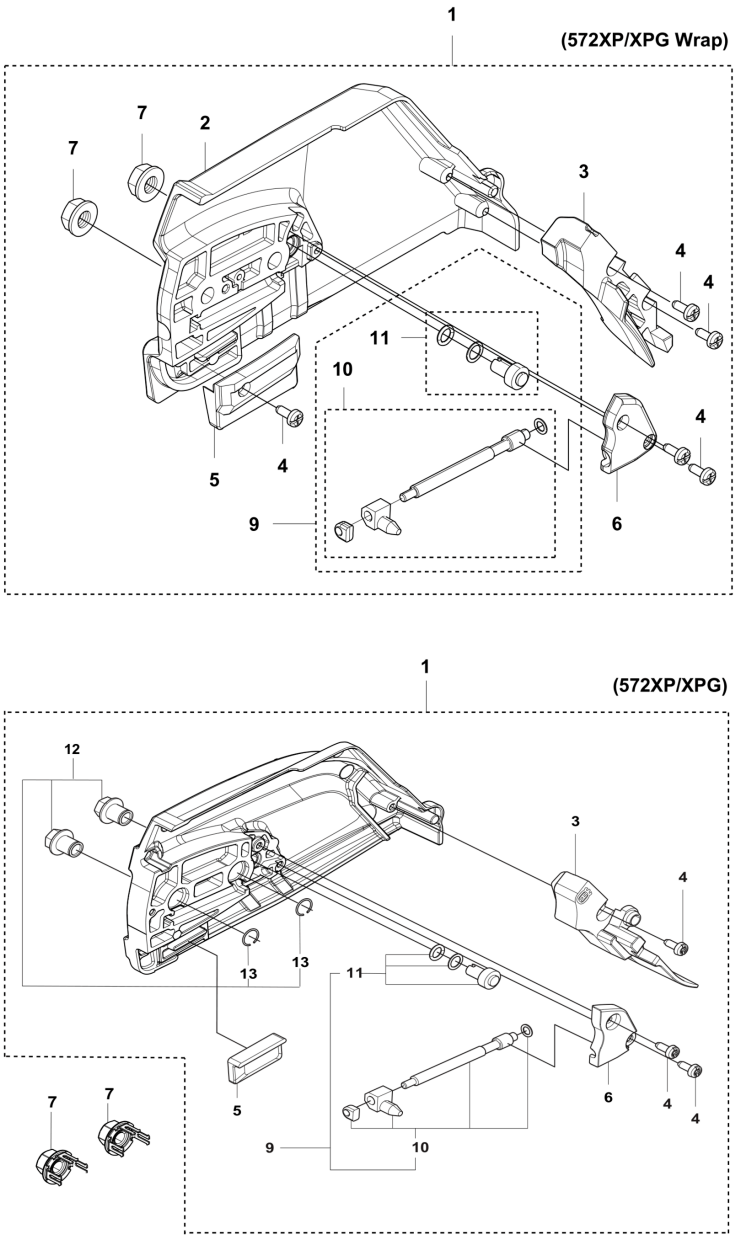

Ref.	Article N.	Description	Qty	Kit
1	596762303	AIR FILTER *Nylon Mesh - 64 Micron Rating - Black*	1	-
1	596762302	AIR FILTER *Nylon Mesh - 25 Micron Rating - Yellow*	1	-
1	596762301	AIR FILTER *Non-Woven - Clear*	1	-

Ref.	Article N.	Description	Qty	Kit
2	577419005	INLET ELBOW *Std*	1	-
2	577419006	INLET ELBOW *Heated*	1	-
3	731231401	HEXAGON NUT	1	-
4	525619201	SEALING	1	-
5	525619001	SEALING	1	-
6	577536402	WIRING ASSY	1	-
7	510017202	CHOKE CONTROL ASSY	1	-
8	505156201	SCREW	1	-
9	589378401	SEALING	1	-
10	523056801	FUEL HOSE	1	-
11	525344303	FUEL HOSE	1	-
12	581143101	SCREW ITXSCFM	2	-
13	525588101	SEALING	1	-
14	505165202	FLANGE	1	-
15	503226503	SQUARE NUT	2	-
16	501182001	BAFFLE	1	-
17	575235301	INLET PIPE *Std*	1	-
17	575235302	INLET PIPE *For extrem cold conditions.*	1	-
18	526818101	SCREW ITXSCM	4	-
19	591158301	CARBURETTOR KIT *C1M-140054E*	1	-
20	582179501	SEALING	1	-
21	590059501	SEALING	1	-
22	537213205	KNOB	1	-
23	589340701	CONTACT CLAMP	1	-
24	589340601	RETAINER	1	-
25	582025101	SUPPORT SLEEVE	1	-
26	503936601	PURGE	1	-
1	591158301	CARBURETTOR KIT *C1M-140054E*	1	-
2	522518901	GASKET KIT *GASKET KIT*	1	-
3	590191501	REPAIR KIT *Metering Kit*	1	-
4	590191601	CARBURETTOR *Throttle Lever Kit*	1	-

Ref.	Article N.	Description	Qty	Kit
6	537383401	SPRING -	1	-
7	522517901	ROD -	1	-
15	522545101	SCREW -	4	-
1	576139602	HAND GUARD -	1	-
2	590105301	SCREW KIT *KIT - Screws and Bushings*	1	-
3	590110201	CHAIN BRAKE -	1	-
4	590105602	KNEE JOINT -	1	-
5	503752202	BRAKE BAND ASSY -	1	-
6	574825601	COVER -	1	-
7	582213301	SCREW -	3	-
1	577603801	CLUTCH DRUM ASSY -	1	-
2	503432001	NEEDLE HOLDER -	1	-
3	501598002	RIM SPROCKET -	1	-
4	503752401	WASHER -	1	-
5	503272101	E-CLIP -	1	-
6	586798404	CLUTCH ASSY -	1	-
7	537360601	CLUTCH SPRING -	3	-
8	582270108	PUMP PINION -	1	-
9	589028403	OIL PUMP ASSY -	1	-
10	590119703	PUMP PISTON -	1	-
11	590120101	OIL PUMP -	1	-
12	576987401	OIL PRESSURE HOSE	1	-

Ref.	Article N.	Description	Qty	Kit
		-		
13	526818102	SCREW ITXSCM -	2	-
14	588404702	OIL HOSE -	1	-
15	501544102	OIL SCREEN -	1	-
1	594907802	CLUTCH COVER ASSY *Wrap*	1	-
1	599591701	CLUTCH COVER ASSY	1	-
2	537172604	CLUTCH COVER *Wrap*	1	-
2	575236303	CLUTCH COVER	1	-
3	537174101	CHIP GUARD *Wrap*	1	-
3	575236401	CHIP GUARD	1	-
4	526221801	SCREW CITXPANT	3	-
4	525887402	SCREW CITXPANT *Wrap*	4	-
5	501517201	CHAIN GUIDE	1	-
5	537043401	CHAIN GUIDE *Wrap*	1	-
6	537016801	COVER *Wrap*	1	-
6	576424301	COVER	1	-
7	503220001	HEXAGON NUT *Wrap*	2	-
7	505197301	NUT *-up to s/n 224400900*	2	-
9	590104701	CHAIN TENSIONER KIT	1	-
10	590104801	WORM SCREW	1	-
11	590105101	WORM WHEEL	1	-
12	531012901	CHAIN BRAKE *From s/n 224400901-, 2pcs Unlosable nuts and 2pcs Snap rings*	1	-
13	531222801	SNAP RING	1	-
1	590195605	CRANKCASE ASSY	1	-
2	537051301	BAR BOLT	2	-
3	537203001	PIN KNEE-JOINT	1	-
4	530026119	CHECK VALVE	1	-
5	537403501	FILTER	1	-
6	593806001	GUIDE BUSHING	2	-

Ref.	Article N.	Description	Qty	Kit
7	522620003	TANK CAP ASSY	1	-
9	589241101	GASKET	1	-
10	503578901	HOLDER	1	-
11	575616301	CHAIN GUIDE PLATE	1	-
12	526221801	SCREW CITXPANT	1	-
13	575841104	SCREW ITXSCM	6	-
14	537377902	CHAIN CATCHER	1	-
15	525824401	SCREW ITXSCM	2	-
16	595303003	SNAP LOCKING	3	-
17	525798103	SCREW ITXSCFT	2	-
18	534114101	CARBURETTOR AREA BASE	1	-
19	583098401	FIXING WASHER	1	-
20	525755202	SCREW ITXSCFM	4	-
21	581559201	BELLOWS	1	-
22	597909701	DAMPER *Mounting*	2	-
23	589340502	AIR NOZZLE	1	-
24	574353505	SCREW ITXSCM	1	-
29	578864701	GASKET KIT	1	-
32	590261002	SPIKE *Kit - Inner Std*	1	-
33	582179601	SEALING	1	-
34	589349001	SEALING	1	-
35	590261101	GROMMET	1	-
36	582157101	GROMMET	1	-
37	589527701	GROMMET	1	-
38	501515401	SUPPORT	1	-
1	577607401	CRANKSHAFT ASSY -	1	-
2	577572401	NEEDLE BEARING -	1	-
3	587293401	BALL BEARING -	2	-
4	582812601	RADIAL SEAL -	2	-
1	579798701	CYLINDER COVER -	1	-
1	590150305	CYLINDER ASSY *With instruction to download new Firmware*	1	-
2	547282401	PISTON ASSY	1	-

Ref.	Article N.	Description	Qty	Kit
		With instruction to download new Firmware		
3	576627401	PISTON RING *- up to s/n 572XPG; 20242704550, 572XP; 20242705666, Only for 576626706* *Piston assy*	2	-
3	529317601	PISTON RING *From s/n - 572XPG; 20242704551, 572XP; 20242705667, Only for 547282401* *Piston assy*	2	-
4	577572401	NEEDLE BEARING	1	-
5	737431200	SNAP RING	2	-
6	503552201	PLUG	1	-
7	584288701	DECOMPRESSION VALVE	1	-
8	503235111	SPARK PLUG	1	-
9	501811202	SCREW ITXSCM	4	-
10	589527901	SLEEVE	4	-
11	577239801	GASKET	1	-
12	578864701	GASKET KIT	1	-
1	578200701	FUEL TANK ASSY	1	-
2	501152901	TANK VENT ASSY	1	-
3	537208401	THROTTLE LOCKOUT	1	-
4	576162802	THROTTLE CABLE ASSY	1	-
5	544099901	SPRING	1	-
6	576956701	THROTTLE	1	-
7	720182520	PARALLEL PIN	1	-
8	501007601	SUPPORT	1	-
9	575010201	WEAR PROTECTION	1	-
10	523085501	DEFLECTION LIMITER	1	-
11	577062701	ANTIVIBRATION ELEMENT *Hard*	1	-
11	577062702	ANTIVIBRATION ELEMENT	1	-
12	503854103	ANTIVIBRATION ELEMENT *Hard*	1	-
12	503854104	ANTIVIBRATION ELEMENT	1	-
13	529578202	FUEL HOSE ASSY *With magnet*	1	-
14	503443201	FUEL FILTER *18-40 µm (Blue)*	1	-
14	503443205	FUEL FILTER *18-40 µm (Blue) Mega pack (100 pcs)*	1	-
15	522620003	TANK CAP ASSY	1	-
16	589241101	GASKET	1	-

Ref.	Article N.	Description	Qty	Kit
17	503578901	HOLDER	1	-
18	525887402	SCREW CITXPANT	1	-
19	537205601	COVER *H572 XP*	1	-
19	589698901	HANDLE INSERT *H572 XPG*	1	-
20	590567001	DECAL	1	-
1	579484302	FRONT HANDLE ASSY -	1	-
2	504064501	SCREW ITXPANM -	1	-
3	589699101	ANTIVIBRATION ELEMENT -	1	-
3	589699102	ANTIVIBRATION ELEMENT *Hard*	1	-
4	503226601	SQUARE NUT -	1	-
5	525798103	SCREW ITXSCFT -	3	-
6	575885703	SCREW ITXSCFM -	2	-
8	582654201	COVER -	1	-
10	537252501	CONTACT PLATE -	1	-
11	537088301	GROMMET -	1	-
12	590469101	PROTECTION -	1	-
1	579504003	FRONT HANDLE ASSY *Wrap*	1	-
2	579504002	FRONT HANDLE ASSY -	1	-
3	589699101	ANTIVIBRATION ELEMENT -	1	-
3	589699102	ANTIVIBRATION ELEMENT *Hard*	1	-
4	503226601	SQUARE NUT -	1	-
5	525798103	SCREW ITXSCFT -	3	-
6	575885703	SCREW ITXSCFM -	3	-

Ref.	Article N.	Description	Qty	Kit
8	582654201	COVER -	1	-
10	537252501	CONTACT PLATE -	1	-
12	525824902	SCREW ITXSCM -	1	-
13	537331007	CLUTCH COVER ASSY -	1	-
14	503220001	HEXAGON NUT -	1	-
15	589772101	SPIKE *Kit*	1	-
16	525887402	SCREW CITXPANT -	1	-
17	503922701	SPIKE -	1	-
18	537017201	SPIKE -	1	-
19	589771301	CHAIN CATCHER -	1	-
20	537024401	WEAR PROTECTION -	1	-
21	504064501	SCREW ITXPANM -	1	-
22	590469101	PROTECTION -	1	-
23	537088301	GROMMET -	1	-
1	579504001	FRONT HANDLE ASSY -	1	-
2	504064501	SCREW ITXPANM -	1	-
3	575015301	ANTIVIBRATION ELEMENT -	0	-
3	575015303	ANTIVIBRATION ELEMENT *Hard*	1	-
4	503226601	SQUARE NUT -	1	-
5	525798103	SCREW ITXSCFT -	3	-
6	575885703	SCREW ITXSCFM -	3	-
12	525824902	SCREW ITXSCM	2	-

Ref.	Article N.	Description	Qty	Kit
		-		
13	537331007	CLUTCH COVER ASSY -	1	-
14	503220001	HEXAGON NUT -	2	-
15	589772101	SPIKE *Kit*	1	-
16	525887402	SCREW CITXPANT -	1	-
17	503922701	SPIKE -	1	-
18	537017201	SPIKE -	1	-
19	589771301	CHAIN CATCHER -	1	-
20	537024401	WEAR PROTECTION -	1	-
1	579484303	FRONT HANDLE ASSY -	1	-
2	504064501	SCREW ITXPANM -	1	-
3	575015301	ANTIVIBRATION ELEMENT -	1	-
3	575015303	ANTIVIBRATION ELEMENT *Hard*	0	-
4	503226601	SQUARE NUT -	1	-
5	525798103	SCREW ITXSCFT -	3	-
6	575885703	SCREW ITXSCFM -	2	-
1	579484302	FRONT HANDLE ASSY -	1	-
2	504064501	SCREW ITXPANM -	1	-
3	589699101	ANTIVIBRATION ELEMENT -	1	-
3	589699102	ANTIVIBRATION ELEMENT *Hard*	1	-
4	503226601	SQUARE NUT -	1	-
5	525798103	SCREW ITXSCFT -	3	-

Ref.	Article N.	Description	Qty	Kit
6	575885703	SCREW ITXSCFM -	2	-
8	582654201	COVER -	1	-
10	537252501	CONTACT PLATE -	1	-
11	537088301	GROMMET -	1	-
12	590688101	GENERATOR STATOR -	1	-
13	526818102	SCREW ITXSCM -	2	-
14	590688301	THERMOSTAT ASSY -	1	-
16	588168601	FOIL ELEMENT -	1	-
17	575396402	DECAL -	1	-
18	576777202	FLYWHEEL ASSY -	1	-
19	503220401	NUT -	1	-
20	590281301	PAWL *Kit*	1	-
21	589698901	HANDLE INSERT -	1	-
22	526221801	SCREW CITXPANT -	1	-
24	577419006	INLET ELBOW *Heated*	1	-
25	731231401	HEXAGON NUT -	1	-
26	589378401	SEALING -	1	-
27	525619201	SEALING -	1	-
28	525619001	SEALING -	1	-
29	577536402	WIRING ASSY -	1	-
30	510017202	CHOKE CONTROL ASSY -	1	-
31	505156201	SCREW	1	-

Ref.	Article N.	Description	Qty	Kit
		-		
32	590469101	PROTECTION -	1	-
1	576777201	FLYWHEEL ASSY *H572 XP*	1	-
2	590281301	PAWL *Kit*	1	-
3	503220401	NUT -	1	-
4	588193102	IGNITION MODULE ASSY -	1	-
5	590298801	SPARK PLUG CAP -	1	-
6	579451801	WIRE HOLDER -	1	-
7	525824902	SCREW ITXSCM -	2	-
1	587217801	MUFFLER KIT -	1	-
2	585390001	SPARK ARRESTER -	1	-
3	724128759	SCREW CRPANM -	1	-
4	525825106	SCREW ITXSCM -	2	-
5	587351001	HEAT DEFLECTOR -	1	-
6	587350901	GASKET -	1	-
7	578864701	GASKET KIT -	1	-
8	525762503	SCREW ITXSCM -	2	-
1	582752008	CRANKCASE ASSY	1	-
1	575527604	STARTER HOUSING	1	-
2	598750301	SPRING CASSETTE ASSY	1	-
3	525887401	SCREW CITXPANT	2	-
4	531314801	STARTER PULLEY ASSY	1	-
5	576356601	SCREW ITXSCT	1	-
6	505305125	STARTER ROPE	1	-
7	537232501	STARTER HANDLE	1	-
8	525824501	SCREW CITXPANMO	4	-

Ref.	Article N.	Description	Qty	Kit
9	575525802	STARTER HOUSING	1	-
10	537283201	SLEEVE	1	-
11	575396401	DECAL *H572 XP*	1	-
12	575396402	DECAL *H572 XPG*	1	-
13	575525201	BAFFLE	1	-
1	503558513	TOOL -	1	-
2	501691701	COMBINATION WRENCH -	1	-
3	575880701	WRENCH -	1	-
4	583897101	DIAGNOSTIC TOOL KIT -	1	-
5	576183401	CABLE ASSY -	1	-
6	576952201	CABLE ASSY -	1	-
7	575527501	WINTER KIT -	1	-
8	576162601	WINTER COVER -	1	-
9	503217016	SCREW CCRPANT -	2	-
10	740420100	O-RING -	2	-
11	590261001	SPIKE *Outer, std*	1	-
12	575236501	SPIKE -	1	-
13	503222401	LOCK NUT -	2	-
14	525755202	SCREW ITXSCFM -	2	-
15	589772101	SPIKE -	1	-
16	589771301	CHAIN CATCHER -	1	-
17	537024401	WEAR PROTECTION -	1	-
18	537017201	SPIKE -	1	-

Ref.	Article N.	Description	Qty	Kit
19	503922701	SPIKE -	1	-
20	525887402	SCREW CITXPANT -	1	-
21	525824902	SCREW ITXSCM -	2	-
22	503220001	HEXAGON NUT -	2	-

CRANKCASE

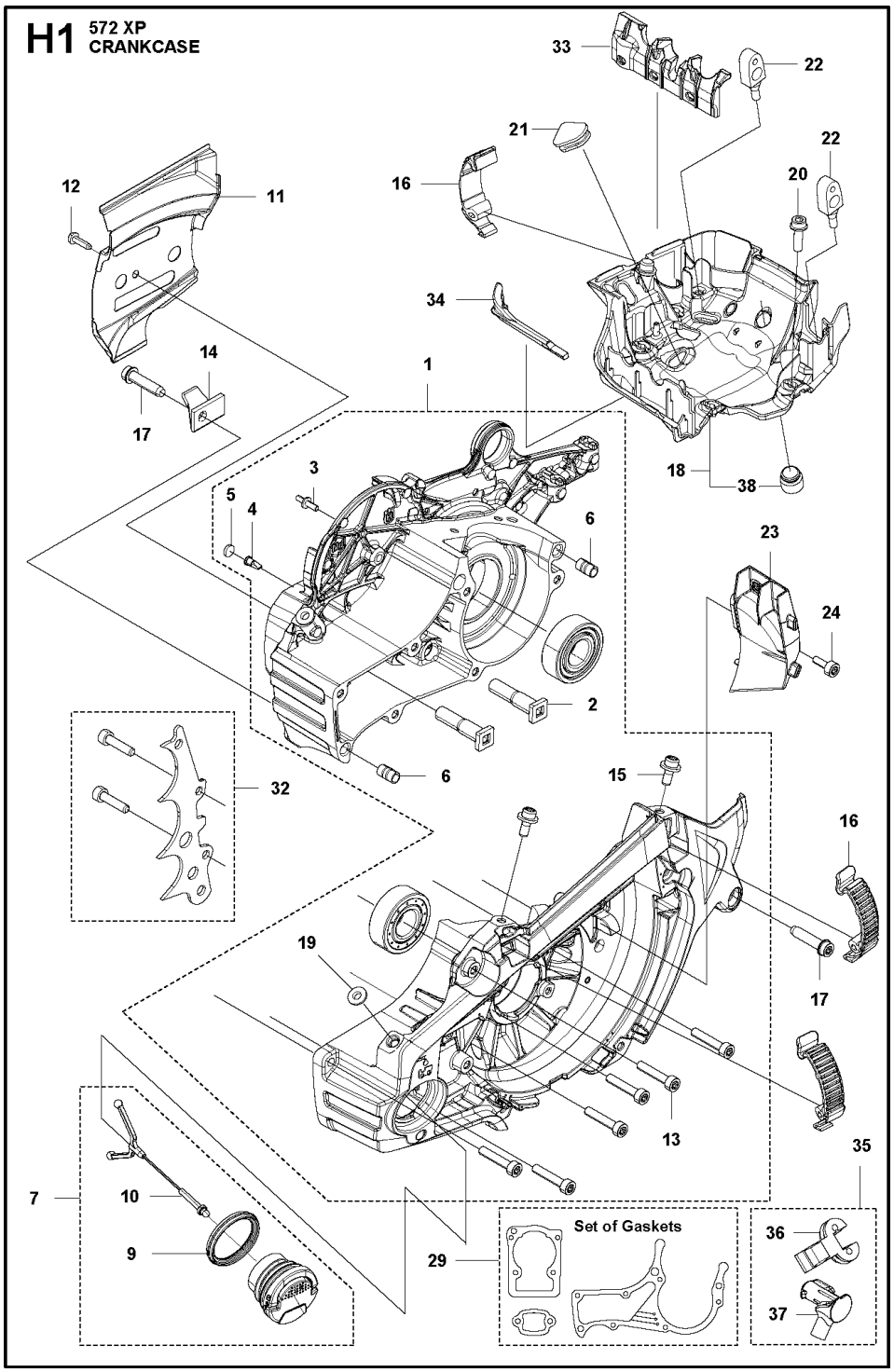

Ref.	Article N.	Description	Qty	Kit
1	596762303	AIR FILTER *Nylon Mesh - 64 Micron Rating - Black*	1	-
1	596762302	AIR FILTER *Nylon Mesh - 25 Micron Rating - Yellow*	1	-
1	596762301	AIR FILTER *Non-Woven - Clear*	1	-

Ref.	Article N.	Description	Qty	Kit
2	577419005	INLET ELBOW *Std*	1	-
2	577419006	INLET ELBOW *Heated*	1	-
3	731231401	HEXAGON NUT	1	-
4	525619201	SEALING	1	-
5	525619001	SEALING	1	-
6	577536402	WIRING ASSY	1	-
7	510017202	CHOKE CONTROL ASSY	1	-
8	505156201	SCREW	1	-
9	589378401	SEALING	1	-
10	523056801	FUEL HOSE	1	-
11	525344303	FUEL HOSE	1	-
12	581143101	SCREW ITXSCFM	2	-
13	525588101	SEALING	1	-
14	505165202	FLANGE	1	-
15	503226503	SQUARE NUT	2	-
16	501182001	BAFFLE	1	-
17	575235301	INLET PIPE *Std*	1	-
17	575235302	INLET PIPE *For extrem cold conditions.*	1	-
18	526818101	SCREW ITXSCM	4	-
19	591158301	CARBURETTOR KIT *C1M-140054E*	1	-
20	582179501	SEALING	1	-
21	590059501	SEALING	1	-
22	537213205	KNOB	1	-
23	589340701	CONTACT CLAMP	1	-
24	589340601	RETAINER	1	-
25	582025101	SUPPORT SLEEVE	1	-
26	503936601	PURGE	1	-
1	591158301	CARBURETTOR KIT *C1M-140054E*	1	-
2	522518901	GASKET KIT *GASKET KIT*	1	-
3	590191501	REPAIR KIT *Metering Kit*	1	-
4	590191601	CARBURETTOR *Throttle Lever Kit*	1	-

Ref.	Article N.	Description	Qty	Kit
6	537383401	SPRING -	1	-
7	522517901	ROD -	1	-
15	522545101	SCREW -	4	-
1	576139602	HAND GUARD -	1	-
2	590105301	SCREW KIT *KIT - Screws and Bushings*	1	-
3	590110201	CHAIN BRAKE -	1	-
4	590105602	KNEE JOINT -	1	-
5	503752202	BRAKE BAND ASSY -	1	-
6	574825601	COVER -	1	-
7	582213301	SCREW -	3	-
1	577603801	CLUTCH DRUM ASSY -	1	-
2	503432001	NEEDLE HOLDER -	1	-
3	501598002	RIM SPROCKET -	1	-
4	503752401	WASHER -	1	-
5	503272101	E-CLIP -	1	-
6	586798404	CLUTCH ASSY -	1	-
7	537360601	CLUTCH SPRING -	3	-
8	582270108	PUMP PINION -	1	-
9	589028403	OIL PUMP ASSY -	1	-
10	590119703	PUMP PISTON -	1	-
11	590120101	OIL PUMP -	1	-
12	576987401	OIL PRESSURE HOSE	1	-

Ref.	Article N.	Description	Qty	Kit
		-		
13	526818102	SCREW ITXSCM -	2	-
14	588404702	OIL HOSE -	1	-
15	501544102	OIL SCREEN -	1	-
1	594907802	CLUTCH COVER ASSY *Wrap*	1	-
1	599591701	CLUTCH COVER ASSY	1	-
2	537172604	CLUTCH COVER *Wrap*	1	-
2	575236303	CLUTCH COVER	1	-
3	537174101	CHIP GUARD *Wrap*	1	-
3	575236401	CHIP GUARD	1	-
4	526221801	SCREW CITXPANT	3	-
4	525887402	SCREW CITXPANT *Wrap*	4	-
5	501517201	CHAIN GUIDE	1	-
5	537043401	CHAIN GUIDE *Wrap*	1	-
6	537016801	COVER *Wrap*	1	-
6	576424301	COVER	1	-
7	503220001	HEXAGON NUT *Wrap*	2	-
7	505197301	NUT *-up to s/n 224400900*	2	-
9	590104701	CHAIN TENSIONER KIT	1	-
10	590104801	WORM SCREW	1	-
11	590105101	WORM WHEEL	1	-
12	531012901	CHAIN BRAKE *From s/n 224400901-, 2pcs Unlosable nuts and 2pcs Snap rings*	1	-
13	531222801	SNAP RING	1	-
1	590195605	CRANKCASE ASSY	1	-
2	537051301	BAR BOLT	2	-
3	537203001	PIN KNEE-JOINT	1	-
4	530026119	CHECK VALVE	1	-
5	537403501	FILTER	1	-
6	593806001	GUIDE BUSHING	2	-

Ref.	Article N.	Description	Qty	Kit
7	522620003	TANK CAP ASSY	1	-
9	589241101	GASKET	1	-
10	503578901	HOLDER	1	-
11	575616301	CHAIN GUIDE PLATE	1	-
12	526221801	SCREW CITXPANT	1	-
13	575841104	SCREW ITXSCM	6	-
14	537377902	CHAIN CATCHER	1	-
15	525824401	SCREW ITXSCM	2	-
16	595303003	SNAP LOCKING	3	-
17	525798103	SCREW ITXSCFT	2	-
18	534114101	CARBURETTOR AREA BASE	1	-
19	583098401	FIXING WASHER	1	-
20	525755202	SCREW ITXSCFM	4	-
21	581559201	BELLOWS	1	-
22	597909701	DAMPER *Mounting*	2	-
23	589340502	AIR NOZZLE	1	-
24	574353505	SCREW ITXSCM	1	-
29	578864701	GASKET KIT	1	-
32	590261002	SPIKE *Kit - Inner Std*	1	-
33	582179601	SEALING	1	-
34	589349001	SEALING	1	-
35	590261101	GROMMET	1	-
36	582157101	GROMMET	1	-
37	589527701	GROMMET	1	-
38	501515401	SUPPORT	1	-
1	577607401	CRANKSHAFT ASSY -	1	-
2	577572401	NEEDLE BEARING -	1	-
3	587293401	BALL BEARING -	2	-
4	582812601	RADIAL SEAL -	2	-
1	579798701	CYLINDER COVER -	1	-
1	590150305	CYLINDER ASSY *With instruction to download new Firmware*	1	-
2	547282401	PISTON ASSY	1	-

Ref.	Article N.	Description	Qty	Kit
		With instruction to download new Firmware		
3	576627401	PISTON RING *- up to s/n 572XPG; 20242704550, 572XP; 20242705666, Only for 576626706* *Piston assy*	2	-
3	529317601	PISTON RING *From s/n - 572XPG; 20242704551, 572XP; 20242705667, Only for 547282401* *Piston assy*	2	-
4	577572401	NEEDLE BEARING	1	-
5	737431200	SNAP RING	2	-
6	503552201	PLUG	1	-
7	584288701	DECOMPRESSION VALVE	1	-
8	503235111	SPARK PLUG	1	-
9	501811202	SCREW ITXSCM	4	-
10	589527901	SLEEVE	4	-
11	577239801	GASKET	1	-
12	578864701	GASKET KIT	1	-
1	578200701	FUEL TANK ASSY	1	-
2	501152901	TANK VENT ASSY	1	-
3	537208401	THROTTLE LOCKOUT	1	-
4	576162802	THROTTLE CABLE ASSY	1	-
5	544099901	SPRING	1	-
6	576956701	THROTTLE	1	-
7	720182520	PARALLEL PIN	1	-
8	501007601	SUPPORT	1	-
9	575010201	WEAR PROTECTION	1	-
10	523085501	DEFLECTION LIMITER	1	-
11	577062701	ANTIVIBRATION ELEMENT *Hard*	1	-
11	577062702	ANTIVIBRATION ELEMENT	1	-
12	503854103	ANTIVIBRATION ELEMENT *Hard*	1	-
12	503854104	ANTIVIBRATION ELEMENT	1	-
13	529578202	FUEL HOSE ASSY *With magnet*	1	-
14	503443201	FUEL FILTER *18-40 µm (Blue)*	1	-
14	503443205	FUEL FILTER *18-40 µm (Blue) Mega pack (100 pcs)*	1	-
15	522620003	TANK CAP ASSY	1	-
16	589241101	GASKET	1	-

Ref.	Article N.	Description	Qty	Kit
17	503578901	HOLDER	1	-
18	525887402	SCREW CITXPANT	1	-
19	537205601	COVER *H572 XP*	1	-
19	589698901	HANDLE INSERT *H572 XPG*	1	-
20	590567001	DECAL	1	-
1	579484302	FRONT HANDLE ASSY -	1	-
2	504064501	SCREW ITXPANM -	1	-
3	589699101	ANTIVIBRATION ELEMENT -	1	-
3	589699102	ANTIVIBRATION ELEMENT *Hard*	1	-
4	503226601	SQUARE NUT -	1	-
5	525798103	SCREW ITXSCFT -	3	-
6	575885703	SCREW ITXSCFM -	2	-
8	582654201	COVER -	1	-
10	537252501	CONTACT PLATE -	1	-
11	537088301	GROMMET -	1	-
12	590469101	PROTECTION -	1	-
1	579504003	FRONT HANDLE ASSY *Wrap*	1	-
2	579504002	FRONT HANDLE ASSY -	1	-
3	589699101	ANTIVIBRATION ELEMENT -	1	-
3	589699102	ANTIVIBRATION ELEMENT *Hard*	1	-
4	503226601	SQUARE NUT -	1	-
5	525798103	SCREW ITXSCFT -	3	-
6	575885703	SCREW ITXSCFM -	3	-

Ref.	Article N.	Description	Qty	Kit
8	582654201	COVER -	1	-
10	537252501	CONTACT PLATE -	1	-
12	525824902	SCREW ITXSCM -	1	-
13	537331007	CLUTCH COVER ASSY -	1	-
14	503220001	HEXAGON NUT -	1	-
15	589772101	SPIKE *Kit*	1	-
16	525887402	SCREW CITXPANT -	1	-
17	503922701	SPIKE -	1	-
18	537017201	SPIKE -	1	-
19	589771301	CHAIN CATCHER -	1	-
20	537024401	WEAR PROTECTION -	1	-
21	504064501	SCREW ITXPANM -	1	-
22	590469101	PROTECTION -	1	-
23	537088301	GROMMET -	1	-
1	579504001	FRONT HANDLE ASSY -	1	-
2	504064501	SCREW ITXPANM -	1	-
3	575015301	ANTIVIBRATION ELEMENT -	0	-
3	575015303	ANTIVIBRATION ELEMENT *Hard*	1	-
4	503226601	SQUARE NUT -	1	-
5	525798103	SCREW ITXSCFT -	3	-
6	575885703	SCREW ITXSCFM -	3	-
12	525824902	SCREW ITXSCM	2	-

Ref.	Article N.	Description	Qty	Kit
		-		
13	537331007	CLUTCH COVER ASSY -	1	-
14	503220001	HEXAGON NUT -	2	-
15	589772101	SPIKE *Kit*	1	-
16	525887402	SCREW CITXPANT -	1	-
17	503922701	SPIKE -	1	-
18	537017201	SPIKE -	1	-
19	589771301	CHAIN CATCHER -	1	-
20	537024401	WEAR PROTECTION -	1	-
1	579484303	FRONT HANDLE ASSY -	1	-
2	504064501	SCREW ITXPANM -	1	-
3	575015301	ANTIVIBRATION ELEMENT -	1	-
3	575015303	ANTIVIBRATION ELEMENT *Hard*	0	-
4	503226601	SQUARE NUT -	1	-
5	525798103	SCREW ITXSCFT -	3	-
6	575885703	SCREW ITXSCFM -	2	-
1	579484302	FRONT HANDLE ASSY -	1	-
2	504064501	SCREW ITXPANM -	1	-
3	589699101	ANTIVIBRATION ELEMENT -	1	-
3	589699102	ANTIVIBRATION ELEMENT *Hard*	1	-
4	503226601	SQUARE NUT -	1	-
5	525798103	SCREW ITXSCFT -	3	-

Ref.	Article N.	Description	Qty	Kit
6	575885703	SCREW ITXSCFM -	2	-
8	582654201	COVER -	1	-
10	537252501	CONTACT PLATE -	1	-
11	537088301	GROMMET -	1	-
12	590688101	GENERATOR STATOR -	1	-
13	526818102	SCREW ITXSCM -	2	-
14	590688301	THERMOSTAT ASSY -	1	-
16	588168601	FOIL ELEMENT -	1	-
17	575396402	DECAL -	1	-
18	576777202	FLYWHEEL ASSY -	1	-
19	503220401	NUT -	1	-
20	590281301	PAWL *Kit*	1	-
21	589698901	HANDLE INSERT -	1	-
22	526221801	SCREW CITXPANT -	1	-
24	577419006	INLET ELBOW *Heated*	1	-
25	731231401	HEXAGON NUT -	1	-
26	589378401	SEALING -	1	-
27	525619201	SEALING -	1	-
28	525619001	SEALING -	1	-
29	577536402	WIRING ASSY -	1	-
30	510017202	CHOKE CONTROL ASSY -	1	-
31	505156201	SCREW	1	-

Ref.	Article N.	Description	Qty	Kit
		-		
32	590469101	PROTECTION -	1	-
1	576777201	FLYWHEEL ASSY *H572 XP*	1	-
2	590281301	PAWL *Kit*	1	-
3	503220401	NUT -	1	-
4	588193102	IGNITION MODULE ASSY -	1	-
5	590298801	SPARK PLUG CAP -	1	-
6	579451801	WIRE HOLDER -	1	-
7	525824902	SCREW ITXSCM -	2	-
1	587217801	MUFFLER KIT -	1	-
2	585390001	SPARK ARRESTER -	1	-
3	724128759	SCREW CRPANM -	1	-
4	525825106	SCREW ITXSCM -	2	-
5	587351001	HEAT DEFLECTOR -	1	-
6	587350901	GASKET -	1	-
7	578864701	GASKET KIT -	1	-
8	525762503	SCREW ITXSCM -	2	-
1	582752008	CRANKCASE ASSY	1	-
1	575527604	STARTER HOUSING	1	-
2	598750301	SPRING CASSETTE ASSY	1	-
3	525887401	SCREW CITXPANT	2	-
4	531314801	STARTER PULLEY ASSY	1	-
5	576356601	SCREW ITXSCT	1	-
6	505305125	STARTER ROPE	1	-
7	537232501	STARTER HANDLE	1	-
8	525824501	SCREW CITXPANMO	4	-

Ref.	Article N.	Description	Qty	Kit
9	575525802	STARTER HOUSING	1	-
10	537283201	SLEEVE	1	-
11	575396401	DECAL *H572 XP*	1	-
12	575396402	DECAL *H572 XPG*	1	-
13	575525201	BAFFLE	1	-
1	503558513	TOOL -	1	-
2	501691701	COMBINATION WRENCH -	1	-
3	575880701	WRENCH -	1	-
4	583897101	DIAGNOSTIC TOOL KIT -	1	-
5	576183401	CABLE ASSY -	1	-
6	576952201	CABLE ASSY -	1	-
7	575527501	WINTER KIT -	1	-
8	576162601	WINTER COVER -	1	-
9	503217016	SCREW CCRPANT -	2	-
10	740420100	O-RING -	2	-
11	590261001	SPIKE *Outer, std*	1	-
12	575236501	SPIKE -	1	-
13	503222401	LOCK NUT -	2	-
14	525755202	SCREW ITXSCFM -	2	-
15	589772101	SPIKE -	1	-
16	589771301	CHAIN CATCHER -	1	-
17	537024401	WEAR PROTECTION -	1	-
18	537017201	SPIKE -	1	-

Ref.	Article N.	Description	Qty	Kit
19	503922701	SPIKE -	1	-
20	525887402	SCREW CITXPANT -	1	-
21	525824902	SCREW ITXSCM -	2	-
22	503220001	HEXAGON NUT -	2	-

CRANKSHAFT

E 572 XP
CRANKSHAFT

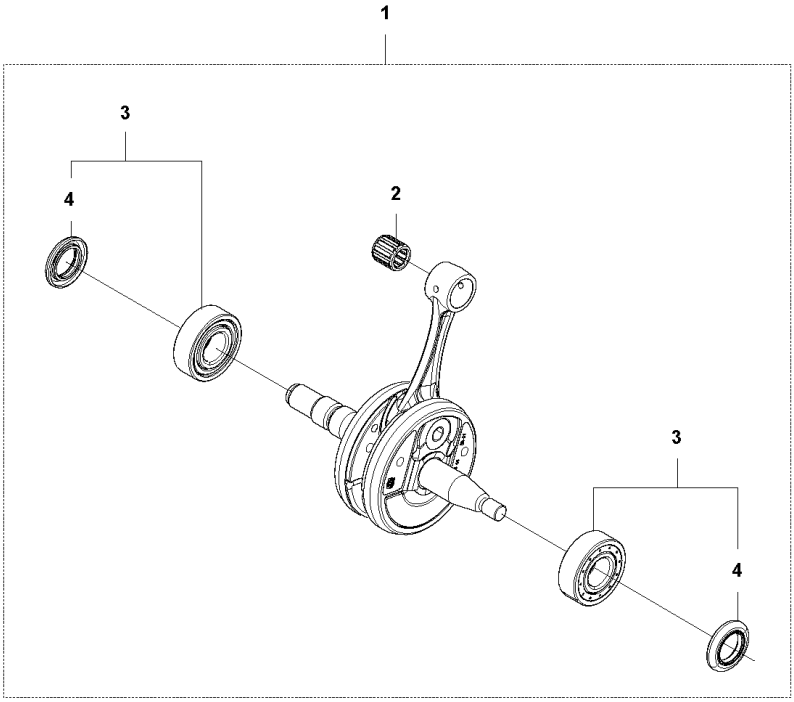

Ref.	Article N.	Description	Qty	Kit
1	596762303	AIR FILTER *Nylon Mesh - 64 Micron Rating - Black*	1	-
1	596762302	AIR FILTER *Nylon Mesh - 25 Micron Rating - Yellow*	1	-
1	596762301	AIR FILTER *Non-Woven - Clear*	1	-

Ref.	Article N.	Description	Qty	Kit
2	577419005	INLET ELBOW *Std*	1	-
2	577419006	INLET ELBOW *Heated*	1	-
3	731231401	HEXAGON NUT	1	-
4	525619201	SEALING	1	-
5	525619001	SEALING	1	-
6	577536402	WIRING ASSY	1	-
7	510017202	CHOKE CONTROL ASSY	1	-
8	505156201	SCREW	1	-
9	589378401	SEALING	1	-
10	523056801	FUEL HOSE	1	-
11	525344303	FUEL HOSE	1	-
12	581143101	SCREW ITXSCFM	2	-
13	525588101	SEALING	1	-
14	505165202	FLANGE	1	-
15	503226503	SQUARE NUT	2	-
16	501182001	BAFFLE	1	-
17	575235301	INLET PIPE *Std*	1	-
17	575235302	INLET PIPE *For extrem cold conditions.*	1	-
18	526818101	SCREW ITXSCM	4	-
19	591158301	CARBURETTOR KIT *C1M-140054E*	1	-
20	582179501	SEALING	1	-
21	590059501	SEALING	1	-
22	537213205	KNOB	1	-
23	589340701	CONTACT CLAMP	1	-
24	589340601	RETAINER	1	-
25	582025101	SUPPORT SLEEVE	1	-
26	503936601	PURGE	1	-
1	591158301	CARBURETTOR KIT *C1M-140054E*	1	-
2	522518901	GASKET KIT *GASKET KIT*	1	-
3	590191501	REPAIR KIT *Metering Kit*	1	-
4	590191601	CARBURETTOR *Throttle Lever Kit*	1	-

Ref.	Article N.	Description	Qty	Kit
6	537383401	SPRING -	1	-
7	522517901	ROD -	1	-
15	522545101	SCREW -	4	-
1	576139602	HAND GUARD -	1	-
2	590105301	SCREW KIT *KIT - Screws and Bushings*	1	-
3	590110201	CHAIN BRAKE -	1	-
4	590105602	KNEE JOINT -	1	-
5	503752202	BRAKE BAND ASSY -	1	-
6	574825601	COVER -	1	-
7	582213301	SCREW -	3	-
1	577603801	CLUTCH DRUM ASSY -	1	-
2	503432001	NEEDLE HOLDER -	1	-
3	501598002	RIM SPROCKET -	1	-
4	503752401	WASHER -	1	-
5	503272101	E-CLIP -	1	-
6	586798404	CLUTCH ASSY -	1	-
7	537360601	CLUTCH SPRING -	3	-
8	582270108	PUMP PINION -	1	-
9	589028403	OIL PUMP ASSY -	1	-
10	590119703	PUMP PISTON -	1	-
11	590120101	OIL PUMP -	1	-
12	576987401	OIL PRESSURE HOSE	1	-

Ref.	Article N.	Description	Qty	Kit
		-		
13	526818102	SCREW ITXSCM -	2	-
14	588404702	OIL HOSE -	1	-
15	501544102	OIL SCREEN -	1	-
1	594907802	CLUTCH COVER ASSY *Wrap*	1	-
1	599591701	CLUTCH COVER ASSY	1	-
2	537172604	CLUTCH COVER *Wrap*	1	-
2	575236303	CLUTCH COVER	1	-
3	537174101	CHIP GUARD *Wrap*	1	-
3	575236401	CHIP GUARD	1	-
4	526221801	SCREW CITXPANT	3	-
4	525887402	SCREW CITXPANT *Wrap*	4	-
5	501517201	CHAIN GUIDE	1	-
5	537043401	CHAIN GUIDE *Wrap*	1	-
6	537016801	COVER *Wrap*	1	-
6	576424301	COVER	1	-
7	503220001	HEXAGON NUT *Wrap*	2	-
7	505197301	NUT *-up to s/n 224400900*	2	-
9	590104701	CHAIN TENSIONER KIT	1	-
10	590104801	WORM SCREW	1	-
11	590105101	WORM WHEEL	1	-
12	531012901	CHAIN BRAKE *From s/n 224400901-, 2pcs Unlosable nuts and 2pcs Snap rings*	1	-
13	531222801	SNAP RING	1	-
1	590195605	CRANKCASE ASSY	1	-
2	537051301	BAR BOLT	2	-
3	537203001	PIN KNEE-JOINT	1	-
4	530026119	CHECK VALVE	1	-
5	537403501	FILTER	1	-
6	593806001	GUIDE BUSHING	2	-

Ref.	Article N.	Description	Qty	Kit
7	522620003	TANK CAP ASSY	1	-
9	589241101	GASKET	1	-
10	503578901	HOLDER	1	-
11	575616301	CHAIN GUIDE PLATE	1	-
12	526221801	SCREW CITXPANT	1	-
13	575841104	SCREW ITXSCM	6	-
14	537377902	CHAIN CATCHER	1	-
15	525824401	SCREW ITXSCM	2	-
16	595303003	SNAP LOCKING	3	-
17	525798103	SCREW ITXSCFT	2	-
18	534114101	CARBURETTOR AREA BASE	1	-
19	583098401	FIXING WASHER	1	-
20	525755202	SCREW ITXSCFM	4	-
21	581559201	BELLOWS	1	-
22	597909701	DAMPER *Mounting*	2	-
23	589340502	AIR NOZZLE	1	-
24	574353505	SCREW ITXSCM	1	-
29	578864701	GASKET KIT	1	-
32	590261002	SPIKE *Kit - Inner Std*	1	-
33	582179601	SEALING	1	-
34	589349001	SEALING	1	-
35	590261101	GROMMET	1	-
36	582157101	GROMMET	1	-
37	589527701	GROMMET	1	-
38	501515401	SUPPORT	1	-
1	577607401	CRANKSHAFT ASSY -	1	-
2	577572401	NEEDLE BEARING -	1	-
3	587293401	BALL BEARING -	2	-
4	582812601	RADIAL SEAL -	2	-
1	579798701	CYLINDER COVER -	1	-
1	590150305	CYLINDER ASSY *With instruction to download new Firmware*	1	-
2	547282401	PISTON ASSY	1	-

Ref.	Article N.	Description	Qty	Kit
		With instruction to download new Firmware		
3	576627401	PISTON RING *- up to s/n 572XPG; 20242704550, 572XP; 20242705666, Only for 576626706* *Piston assy*	2	-
3	529317601	PISTON RING *From s/n - 572XPG; 20242704551, 572XP; 20242705667, Only for 547282401* *Piston assy*	2	-
4	577572401	NEEDLE BEARING	1	-
5	737431200	SNAP RING	2	-
6	503552201	PLUG	1	-
7	584288701	DECOMPRESSION VALVE	1	-
8	503235111	SPARK PLUG	1	-
9	501811202	SCREW ITXSCM	4	-
10	589527901	SLEEVE	4	-
11	577239801	GASKET	1	-
12	578864701	GASKET KIT	1	-
1	578200701	FUEL TANK ASSY	1	-
2	501152901	TANK VENT ASSY	1	-
3	537208401	THROTTLE LOCKOUT	1	-
4	576162802	THROTTLE CABLE ASSY	1	-
5	544099901	SPRING	1	-
6	576956701	THROTTLE	1	-
7	720182520	PARALLEL PIN	1	-
8	501007601	SUPPORT	1	-
9	575010201	WEAR PROTECTION	1	-
10	523085501	DEFLECTION LIMITER	1	-
11	577062701	ANTIVIBRATION ELEMENT *Hard*	1	-
11	577062702	ANTIVIBRATION ELEMENT	1	-
12	503854103	ANTIVIBRATION ELEMENT *Hard*	1	-
12	503854104	ANTIVIBRATION ELEMENT	1	-
13	529578202	FUEL HOSE ASSY *With magnet*	1	-
14	503443201	FUEL FILTER *18-40 µm (Blue)*	1	-
14	503443205	FUEL FILTER *18-40 µm (Blue) Mega pack (100 pcs)*	1	-
15	522620003	TANK CAP ASSY	1	-
16	589241101	GASKET	1	-

Ref.	Article N.	Description	Qty	Kit
17	503578901	HOLDER	1	-
18	525887402	SCREW CITXPANT	1	-
19	537205601	COVER *H572 XP*	1	-
19	589698901	HANDLE INSERT *H572 XPG*	1	-
20	590567001	DECAL	1	-
1	579484302	FRONT HANDLE ASSY -	1	-
2	504064501	SCREW ITXPANM -	1	-
3	589699101	ANTIVIBRATION ELEMENT -	1	-
3	589699102	ANTIVIBRATION ELEMENT *Hard*	1	-
4	503226601	SQUARE NUT -	1	-
5	525798103	SCREW ITXSCFT -	3	-
6	575885703	SCREW ITXSCFM -	2	-
8	582654201	COVER -	1	-
10	537252501	CONTACT PLATE -	1	-
11	537088301	GROMMET -	1	-
12	590469101	PROTECTION -	1	-
1	579504003	FRONT HANDLE ASSY *Wrap*	1	-
2	579504002	FRONT HANDLE ASSY -	1	-
3	589699101	ANTIVIBRATION ELEMENT -	1	-
3	589699102	ANTIVIBRATION ELEMENT *Hard*	1	-
4	503226601	SQUARE NUT -	1	-
5	525798103	SCREW ITXSCFT -	3	-
6	575885703	SCREW ITXSCFM -	3	-

Ref.	Article N.	Description	Qty	Kit
8	582654201	COVER -	1	-
10	537252501	CONTACT PLATE -	1	-
12	525824902	SCREW ITXSCM -	1	-
13	537331007	CLUTCH COVER ASSY -	1	-
14	503220001	HEXAGON NUT -	1	-
15	589772101	SPIKE *Kit*	1	-
16	525887402	SCREW CITXPANT -	1	-
17	503922701	SPIKE -	1	-
18	537017201	SPIKE -	1	-
19	589771301	CHAIN CATCHER -	1	-
20	537024401	WEAR PROTECTION -	1	-
21	504064501	SCREW ITXPANM -	1	-
22	590469101	PROTECTION -	1	-
23	537088301	GROMMET -	1	-
1	579504001	FRONT HANDLE ASSY -	1	-
2	504064501	SCREW ITXPANM -	1	-
3	575015301	ANTIVIBRATION ELEMENT -	0	-
3	575015303	ANTIVIBRATION ELEMENT *Hard*	1	-
4	503226601	SQUARE NUT -	1	-
5	525798103	SCREW ITXSCFT -	3	-
6	575885703	SCREW ITXSCFM -	3	-
12	525824902	SCREW ITXSCM	2	-

Ref.	Article N.	Description	Qty	Kit
		-		
13	537331007	CLUTCH COVER ASSY -	1	-
14	503220001	HEXAGON NUT -	2	-
15	589772101	SPIKE *Kit*	1	-
16	525887402	SCREW CITXPANT -	1	-
17	503922701	SPIKE -	1	-
18	537017201	SPIKE -	1	-
19	589771301	CHAIN CATCHER -	1	-
20	537024401	WEAR PROTECTION -	1	-
1	579484303	FRONT HANDLE ASSY -	1	-
2	504064501	SCREW ITXPANM -	1	-
3	575015301	ANTIVIBRATION ELEMENT -	1	-
3	575015303	ANTIVIBRATION ELEMENT *Hard*	0	-
4	503226601	SQUARE NUT -	1	-
5	525798103	SCREW ITXSCFT -	3	-
6	575885703	SCREW ITXSCFM -	2	-
1	579484302	FRONT HANDLE ASSY -	1	-
2	504064501	SCREW ITXPANM -	1	-
3	589699101	ANTIVIBRATION ELEMENT -	1	-
3	589699102	ANTIVIBRATION ELEMENT *Hard*	1	-
4	503226601	SQUARE NUT -	1	-
5	525798103	SCREW ITXSCFT -	3	-

Ref.	Article N.	Description	Qty	Kit
6	575885703	SCREW ITXSCFM -	2	-
8	582654201	COVER -	1	-
10	537252501	CONTACT PLATE -	1	-
11	537088301	GROMMET -	1	-
12	590688101	GENERATOR STATOR -	1	-
13	526818102	SCREW ITXSCM -	2	-
14	590688301	THERMOSTAT ASSY -	1	-
16	588168601	FOIL ELEMENT -	1	-
17	575396402	DECAL -	1	-
18	576777202	FLYWHEEL ASSY -	1	-
19	503220401	NUT -	1	-
20	590281301	PAWL *Kit*	1	-
21	589698901	HANDLE INSERT -	1	-
22	526221801	SCREW CITXPANT -	1	-
24	577419006	INLET ELBOW *Heated*	1	-
25	731231401	HEXAGON NUT -	1	-
26	589378401	SEALING -	1	-
27	525619201	SEALING -	1	-
28	525619001	SEALING -	1	-
29	577536402	WIRING ASSY -	1	-
30	510017202	CHOKE CONTROL ASSY -	1	-
31	505156201	SCREW	1	-

Ref.	Article N.	Description	Qty	Kit
		-		
32	590469101	PROTECTION -	1	-
1	576777201	FLYWHEEL ASSY *H572 XP*	1	-
2	590281301	PAWL *Kit*	1	-
3	503220401	NUT -	1	-
4	588193102	IGNITION MODULE ASSY -	1	-
5	590298801	SPARK PLUG CAP -	1	-
6	579451801	WIRE HOLDER -	1	-
7	525824902	SCREW ITXSCM -	2	-
1	587217801	MUFFLER KIT -	1	-
2	585390001	SPARK ARRESTER -	1	-
3	724128759	SCREW CRPANM -	1	-
4	525825106	SCREW ITXSCM -	2	-
5	587351001	HEAT DEFLECTOR -	1	-
6	587350901	GASKET -	1	-
7	578864701	GASKET KIT -	1	-
8	525762503	SCREW ITXSCM -	2	-
1	582752008	CRANKCASE ASSY	1	-
1	575527604	STARTER HOUSING	1	-
2	598750301	SPRING CASSETTE ASSY	1	-
3	525887401	SCREW CITXPANT	2	-
4	531314801	STARTER PULLEY ASSY	1	-
5	576356601	SCREW ITXSCT	1	-
6	505305125	STARTER ROPE	1	-
7	537232501	STARTER HANDLE	1	-
8	525824501	SCREW CITXPANMO	4	-

Ref.	Article N.	Description	Qty	Kit
9	575525802	STARTER HOUSING	1	-
10	537283201	SLEEVE	1	-
11	575396401	DECAL *H572 XP*	1	-
12	575396402	DECAL *H572 XPG*	1	-
13	575525201	BAFFLE	1	-
1	503558513	TOOL -	1	-
2	501691701	COMBINATION WRENCH -	1	-
3	575880701	WRENCH -	1	-
4	583897101	DIAGNOSTIC TOOL KIT -	1	-
5	576183401	CABLE ASSY -	1	-
6	576952201	CABLE ASSY -	1	-
7	575527501	WINTER KIT -	1	-
8	576162601	WINTER COVER -	1	-
9	503217016	SCREW CCRPANT -	2	-
10	740420100	O-RING -	2	-
11	590261001	SPIKE *Outer, std*	1	-
12	575236501	SPIKE -	1	-
13	503222401	LOCK NUT -	2	-
14	525755202	SCREW ITXSCFM -	2	-
15	589772101	SPIKE -	1	-
16	589771301	CHAIN CATCHER -	1	-
17	537024401	WEAR PROTECTION -	1	-
18	537017201	SPIKE -	1	-

Ref.	Article N.	Description	Qty	Kit
19	503922701	SPIKE -	1	-
20	525887402	SCREW CITXPANT -	1	-
21	525824902	SCREW ITXSCM -	2	-
22	503220001	HEXAGON NUT -	2	-

CYLINDER COVER

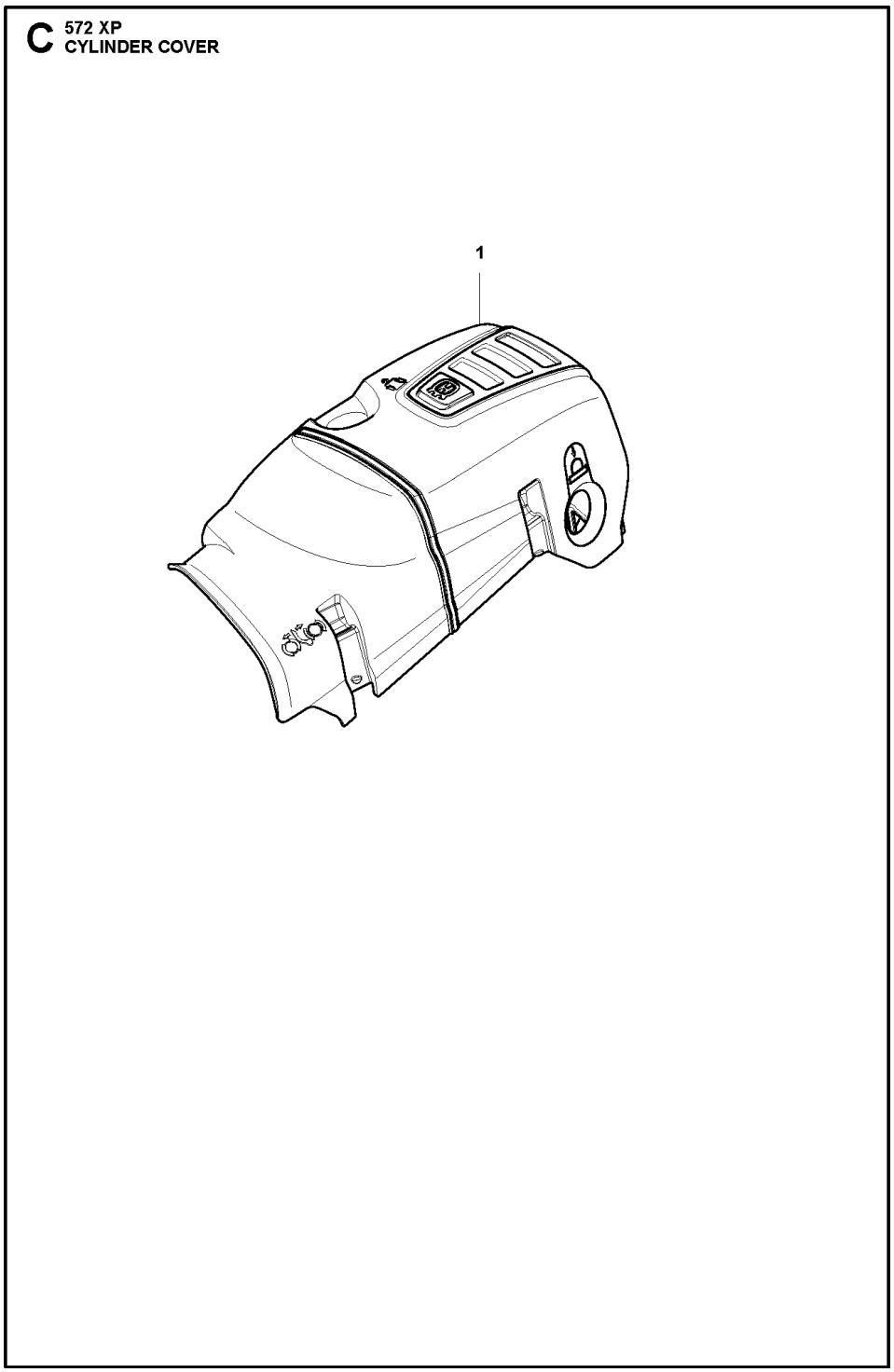

Ref.	Article N.	Description	Qty	Kit
1	596762303	AIR FILTER *Nylon Mesh - 64 Micron Rating - Black*	1	-
1	596762302	AIR FILTER *Nylon Mesh - 25 Micron Rating - Yellow*	1	-
1	596762301	AIR FILTER *Non-Woven - Clear*	1	-

Ref.	Article N.	Description	Qty	Kit
2	577419005	INLET ELBOW *Std*	1	-
2	577419006	INLET ELBOW *Heated*	1	-
3	731231401	HEXAGON NUT	1	-
4	525619201	SEALING	1	-
5	525619001	SEALING	1	-
6	577536402	WIRING ASSY	1	-
7	510017202	CHOKE CONTROL ASSY	1	-
8	505156201	SCREW	1	-
9	589378401	SEALING	1	-
10	523056801	FUEL HOSE	1	-
11	525344303	FUEL HOSE	1	-
12	581143101	SCREW ITXSCFM	2	-
13	525588101	SEALING	1	-
14	505165202	FLANGE	1	-
15	503226503	SQUARE NUT	2	-
16	501182001	BAFFLE	1	-
17	575235301	INLET PIPE *Std*	1	-
17	575235302	INLET PIPE *For extrem cold conditions.*	1	-
18	526818101	SCREW ITXSCM	4	-
19	591158301	CARBURETTOR KIT *C1M-140054E*	1	-
20	582179501	SEALING	1	-
21	590059501	SEALING	1	-
22	537213205	KNOB	1	-
23	589340701	CONTACT CLAMP	1	-
24	589340601	RETAINER	1	-
25	582025101	SUPPORT SLEEVE	1	-
26	503936601	PURGE	1	-
1	591158301	CARBURETTOR KIT *C1M-140054E*	1	-
2	522518901	GASKET KIT *GASKET KIT*	1	-
3	590191501	REPAIR KIT *Metering Kit*	1	-
4	590191601	CARBURETTOR *Throttle Lever Kit*	1	-

Ref.	Article N.	Description	Qty	Kit
6	537383401	SPRING -	1	-
7	522517901	ROD -	1	-
15	522545101	SCREW -	4	-
1	576139602	HAND GUARD -	1	-
2	590105301	SCREW KIT *KIT - Screws and Bushings*	1	-
3	590110201	CHAIN BRAKE -	1	-
4	590105602	KNEE JOINT -	1	-
5	503752202	BRAKE BAND ASSY -	1	-
6	574825601	COVER -	1	-
7	582213301	SCREW -	3	-
1	577603801	CLUTCH DRUM ASSY -	1	-
2	503432001	NEEDLE HOLDER -	1	-
3	501598002	RIM SPROCKET -	1	-
4	503752401	WASHER -	1	-
5	503272101	E-CLIP -	1	-
6	586798404	CLUTCH ASSY -	1	-
7	537360601	CLUTCH SPRING -	3	-
8	582270108	PUMP PINION -	1	-
9	589028403	OIL PUMP ASSY -	1	-
10	590119703	PUMP PISTON -	1	-
11	590120101	OIL PUMP -	1	-
12	576987401	OIL PRESSURE HOSE	1	-

Ref.	Article N.	Description	Qty	Kit
		-		
13	526818102	SCREW ITXSCM -	2	-
14	588404702	OIL HOSE -	1	-
15	501544102	OIL SCREEN -	1	-
1	594907802	CLUTCH COVER ASSY *Wrap*	1	-
1	599591701	CLUTCH COVER ASSY	1	-
2	537172604	CLUTCH COVER *Wrap*	1	-
2	575236303	CLUTCH COVER	1	-
3	537174101	CHIP GUARD *Wrap*	1	-
3	575236401	CHIP GUARD	1	-
4	526221801	SCREW CITXPANT	3	-
4	525887402	SCREW CITXPANT *Wrap*	4	-
5	501517201	CHAIN GUIDE	1	-
5	537043401	CHAIN GUIDE *Wrap*	1	-
6	537016801	COVER *Wrap*	1	-
6	576424301	COVER	1	-
7	503220001	HEXAGON NUT *Wrap*	2	-
7	505197301	NUT *-up to s/n 224400900*	2	-
9	590104701	CHAIN TENSIONER KIT	1	-
10	590104801	WORM SCREW	1	-
11	590105101	WORM WHEEL	1	-
12	531012901	CHAIN BRAKE *From s/n 224400901-, 2pcs Unlosable nuts and 2pcs Snap rings*	1	-
13	531222801	SNAP RING	1	-
1	590195605	CRANKCASE ASSY	1	-
2	537051301	BAR BOLT	2	-
3	537203001	PIN KNEE-JOINT	1	-
4	530026119	CHECK VALVE	1	-
5	537403501	FILTER	1	-
6	593806001	GUIDE BUSHING	2	-

Ref.	Article N.	Description	Qty	Kit
7	522620003	TANK CAP ASSY	1	-
9	589241101	GASKET	1	-
10	503578901	HOLDER	1	-
11	575616301	CHAIN GUIDE PLATE	1	-
12	526221801	SCREW CITXPANT	1	-
13	575841104	SCREW ITXSCM	6	-
14	537377902	CHAIN CATCHER	1	-
15	525824401	SCREW ITXSCM	2	-
16	595303003	SNAP LOCKING	3	-
17	525798103	SCREW ITXSCFT	2	-
18	534114101	CARBURETTOR AREA BASE	1	-
19	583098401	FIXING WASHER	1	-
20	525755202	SCREW ITXSCFM	4	-
21	581559201	BELLOWS	1	-
22	597909701	DAMPER *Mounting*	2	-
23	589340502	AIR NOZZLE	1	-
24	574353505	SCREW ITXSCM	1	-
29	578864701	GASKET KIT	1	-
32	590261002	SPIKE *Kit - Inner Std*	1	-
33	582179601	SEALING	1	-
34	589349001	SEALING	1	-
35	590261101	GROMMET	1	-
36	582157101	GROMMET	1	-
37	589527701	GROMMET	1	-
38	501515401	SUPPORT	1	-
1	577607401	CRANKSHAFT ASSY -	1	-
2	577572401	NEEDLE BEARING -	1	-
3	587293401	BALL BEARING -	2	-
4	582812601	RADIAL SEAL -	2	-
1	579798701	CYLINDER COVER -	1	-
1	590150305	CYLINDER ASSY *With instruction to download new Firmware*	1	-
2	547282401	PISTON ASSY	1	-

Ref.	Article N.	Description	Qty	Kit
		With instruction to download new Firmware		
3	576627401	PISTON RING *- up to s/n 572XPG; 20242704550, 572XP; 20242705666, Only for 576626706* *Piston assy*	2	-
3	529317601	PISTON RING *From s/n - 572XPG; 20242704551, 572XP; 20242705667, Only for 547282401* *Piston assy*	2	-
4	577572401	NEEDLE BEARING	1	-
5	737431200	SNAP RING	2	-
6	503552201	PLUG	1	-
7	584288701	DECOMPRESSION VALVE	1	-
8	503235111	SPARK PLUG	1	-
9	501811202	SCREW ITXSCM	4	-
10	589527901	SLEEVE	4	-
11	577239801	GASKET	1	-
12	578864701	GASKET KIT	1	-
1	578200701	FUEL TANK ASSY	1	-
2	501152901	TANK VENT ASSY	1	-
3	537208401	THROTTLE LOCKOUT	1	-
4	576162802	THROTTLE CABLE ASSY	1	-
5	544099901	SPRING	1	-
6	576956701	THROTTLE	1	-
7	720182520	PARALLEL PIN	1	-
8	501007601	SUPPORT	1	-
9	575010201	WEAR PROTECTION	1	-
10	523085501	DEFLECTION LIMITER	1	-
11	577062701	ANTIVIBRATION ELEMENT *Hard*	1	-
11	577062702	ANTIVIBRATION ELEMENT	1	-
12	503854103	ANTIVIBRATION ELEMENT *Hard*	1	-
12	503854104	ANTIVIBRATION ELEMENT	1	-
13	529578202	FUEL HOSE ASSY *With magnet*	1	-
14	503443201	FUEL FILTER *18-40 µm (Blue)*	1	-
14	503443205	FUEL FILTER *18-40 µm (Blue) Mega pack (100 pcs)*	1	-
15	522620003	TANK CAP ASSY	1	-
16	589241101	GASKET	1	-

Ref.	Article N.	Description	Qty	Kit
17	503578901	HOLDER	1	-
18	525887402	SCREW CITXPANT	1	-
19	537205601	COVER *H572 XP*	1	-
19	589698901	HANDLE INSERT *H572 XPG*	1	-
20	590567001	DECAL	1	-
1	579484302	FRONT HANDLE ASSY -	1	-
2	504064501	SCREW ITXPANM -	1	-
3	589699101	ANTIVIBRATION ELEMENT -	1	-
3	589699102	ANTIVIBRATION ELEMENT *Hard*	1	-
4	503226601	SQUARE NUT -	1	-
5	525798103	SCREW ITXSCFT -	3	-
6	575885703	SCREW ITXSCFM -	2	-
8	582654201	COVER -	1	-
10	537252501	CONTACT PLATE -	1	-
11	537088301	GROMMET -	1	-
12	590469101	PROTECTION -	1	-
1	579504003	FRONT HANDLE ASSY *Wrap*	1	-
2	579504002	FRONT HANDLE ASSY -	1	-
3	589699101	ANTIVIBRATION ELEMENT -	1	-
3	589699102	ANTIVIBRATION ELEMENT *Hard*	1	-
4	503226601	SQUARE NUT -	1	-
5	525798103	SCREW ITXSCFT -	3	-
6	575885703	SCREW ITXSCFM -	3	-

Ref.	Article N.	Description	Qty	Kit
8	582654201	COVER -	1	-
10	537252501	CONTACT PLATE -	1	-
12	525824902	SCREW ITXSCM -	1	-
13	537331007	CLUTCH COVER ASSY -	1	-
14	503220001	HEXAGON NUT -	1	-
15	589772101	SPIKE *Kit*	1	-
16	525887402	SCREW CITXPANT -	1	-
17	503922701	SPIKE -	1	-
18	537017201	SPIKE -	1	-
19	589771301	CHAIN CATCHER -	1	-
20	537024401	WEAR PROTECTION -	1	-
21	504064501	SCREW ITXPANM -	1	-
22	590469101	PROTECTION -	1	-
23	537088301	GROMMET -	1	-
1	579504001	FRONT HANDLE ASSY -	1	-
2	504064501	SCREW ITXPANM -	1	-
3	575015301	ANTIVIBRATION ELEMENT -	0	-
3	575015303	ANTIVIBRATION ELEMENT *Hard*	1	-
4	503226601	SQUARE NUT -	1	-
5	525798103	SCREW ITXSCFT -	3	-
6	575885703	SCREW ITXSCFM -	3	-
12	525824902	SCREW ITXSCM	2	-

Ref.	Article N.	Description	Qty	Kit
		-		
13	537331007	CLUTCH COVER ASSY -	1	-
14	503220001	HEXAGON NUT -	2	-
15	589772101	SPIKE *Kit*	1	-
16	525887402	SCREW CITXPANT -	1	-
17	503922701	SPIKE -	1	-
18	537017201	SPIKE -	1	-
19	589771301	CHAIN CATCHER -	1	-
20	537024401	WEAR PROTECTION -	1	-
1	579484303	FRONT HANDLE ASSY -	1	-
2	504064501	SCREW ITXPANM -	1	-
3	575015301	ANTIVIBRATION ELEMENT -	1	-
3	575015303	ANTIVIBRATION ELEMENT *Hard*	0	-
4	503226601	SQUARE NUT -	1	-
5	525798103	SCREW ITXSCFT -	3	-
6	575885703	SCREW ITXSCFM -	2	-
1	579484302	FRONT HANDLE ASSY -	1	-
2	504064501	SCREW ITXPANM -	1	-
3	589699101	ANTIVIBRATION ELEMENT -	1	-
3	589699102	ANTIVIBRATION ELEMENT *Hard*	1	-
4	503226601	SQUARE NUT -	1	-
5	525798103	SCREW ITXSCFT -	3	-

Ref.	Article N.	Description	Qty	Kit
6	575885703	SCREW ITXSCFM -	2	-
8	582654201	COVER -	1	-
10	537252501	CONTACT PLATE -	1	-
11	537088301	GROMMET -	1	-
12	590688101	GENERATOR STATOR -	1	-
13	526818102	SCREW ITXSCM -	2	-
14	590688301	THERMOSTAT ASSY -	1	-
16	588168601	FOIL ELEMENT -	1	-
17	575396402	DECAL -	1	-
18	576777202	FLYWHEEL ASSY -	1	-
19	503220401	NUT -	1	-
20	590281301	PAWL *Kit*	1	-
21	589698901	HANDLE INSERT -	1	-
22	526221801	SCREW CITXPANT -	1	-
24	577419006	INLET ELBOW *Heated*	1	-
25	731231401	HEXAGON NUT -	1	-
26	589378401	SEALING -	1	-
27	525619201	SEALING -	1	-
28	525619001	SEALING -	1	-
29	577536402	WIRING ASSY -	1	-
30	510017202	CHOKE CONTROL ASSY -	1	-
31	505156201	SCREW	1	-

Ref.	Article N.	Description	Qty	Kit
		-		
32	590469101	PROTECTION -	1	-
1	576777201	FLYWHEEL ASSY *H572 XP*	1	-
2	590281301	PAWL *Kit*	1	-
3	503220401	NUT -	1	-
4	588193102	IGNITION MODULE ASSY -	1	-
5	590298801	SPARK PLUG CAP -	1	-
6	579451801	WIRE HOLDER -	1	-
7	525824902	SCREW ITXSCM -	2	-
1	587217801	MUFFLER KIT -	1	-
2	585390001	SPARK ARRESTER -	1	-
3	724128759	SCREW CRPANM -	1	-
4	525825106	SCREW ITXSCM -	2	-
5	587351001	HEAT DEFLECTOR -	1	-
6	587350901	GASKET -	1	-
7	578864701	GASKET KIT -	1	-
8	525762503	SCREW ITXSCM -	2	-
1	582752008	CRANKCASE ASSY	1	-
1	575527604	STARTER HOUSING	1	-
2	598750301	SPRING CASSETTE ASSY	1	-
3	525887401	SCREW CITXPANT	2	-
4	531314801	STARTER PULLEY ASSY	1	-
5	576356601	SCREW ITXSCT	1	-
6	505305125	STARTER ROPE	1	-
7	537232501	STARTER HANDLE	1	-
8	525824501	SCREW CITXPANMO	4	-

Ref.	Article N.	Description	Qty	Kit
9	575525802	STARTER HOUSING	1	-
10	537283201	SLEEVE	1	-
11	575396401	DECAL *H572 XP*	1	-
12	575396402	DECAL *H572 XPG*	1	-
13	575525201	BAFFLE	1	-
1	503558513	TOOL -	1	-
2	501691701	COMBINATION WRENCH -	1	-
3	575880701	WRENCH -	1	-
4	583897101	DIAGNOSTIC TOOL KIT -	1	-
5	576183401	CABLE ASSY -	1	-
6	576952201	CABLE ASSY -	1	-
7	575527501	WINTER KIT -	1	-
8	576162601	WINTER COVER -	1	-
9	503217016	SCREW CCRPANT -	2	-
10	740420100	O-RING -	2	-
11	590261001	SPIKE *Outer, std*	1	-
12	575236501	SPIKE -	1	-
13	503222401	LOCK NUT -	2	-
14	525755202	SCREW ITXSCFM -	2	-
15	589772101	SPIKE -	1	-
16	589771301	CHAIN CATCHER -	1	-
17	537024401	WEAR PROTECTION -	1	-
18	537017201	SPIKE -	1	-

Ref.	Article N.	Description	Qty	Kit
19	503922701	SPIKE -	1	-
20	525887402	SCREW CITXPANT -	1	-
21	525824902	SCREW ITXSCM -	2	-
22	503220001	HEXAGON NUT -	2	-

CYLINDER PISTON

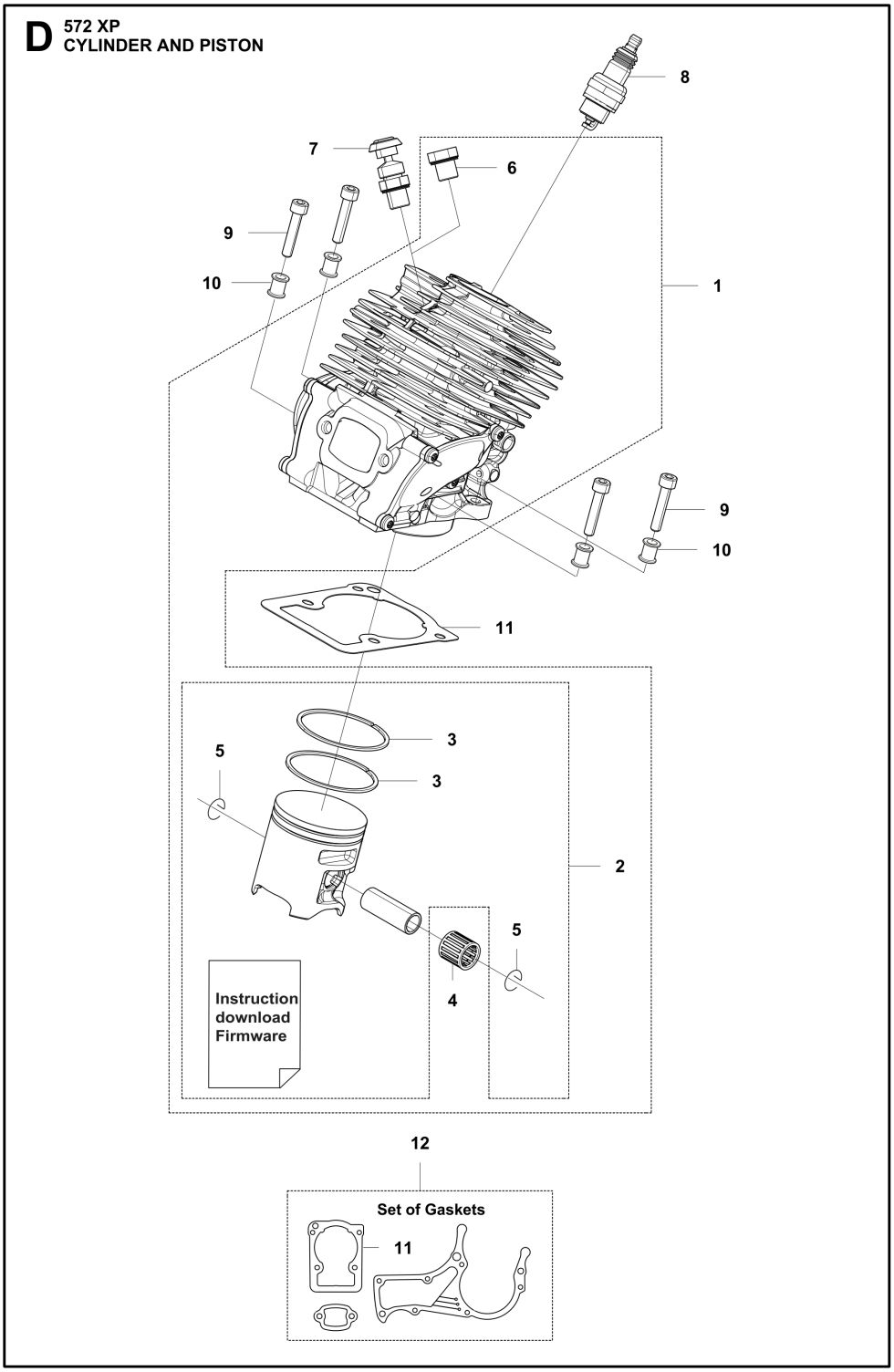

Ref.	Article N.	Description	Qty	Kit
1	596762303	AIR FILTER *Nylon Mesh - 64 Micron Rating - Black*	1	-
1	596762302	AIR FILTER *Nylon Mesh - 25 Micron Rating - Yellow*	1	-
1	596762301	AIR FILTER *Non-Woven - Clear*	1	-

Ref.	Article N.	Description	Qty	Kit
2	577419005	INLET ELBOW *Std*	1	-
2	577419006	INLET ELBOW *Heated*	1	-
3	731231401	HEXAGON NUT	1	-
4	525619201	SEALING	1	-
5	525619001	SEALING	1	-
6	577536402	WIRING ASSY	1	-
7	510017202	CHOKE CONTROL ASSY	1	-
8	505156201	SCREW	1	-
9	589378401	SEALING	1	-
10	523056801	FUEL HOSE	1	-
11	525344303	FUEL HOSE	1	-
12	581143101	SCREW ITXSCFM	2	-
13	525588101	SEALING	1	-
14	505165202	FLANGE	1	-
15	503226503	SQUARE NUT	2	-
16	501182001	BAFFLE	1	-
17	575235301	INLET PIPE *Std*	1	-
17	575235302	INLET PIPE *For extrem cold conditions.*	1	-
18	526818101	SCREW ITXSCM	4	-
19	591158301	CARBURETTOR KIT *C1M-140054E*	1	-
20	582179501	SEALING	1	-
21	590059501	SEALING	1	-
22	537213205	KNOB	1	-
23	589340701	CONTACT CLAMP	1	-
24	589340601	RETAINER	1	-
25	582025101	SUPPORT SLEEVE	1	-
26	503936601	PURGE	1	-
1	591158301	CARBURETTOR KIT *C1M-140054E*	1	-
2	522518901	GASKET KIT *GASKET KIT*	1	-
3	590191501	REPAIR KIT *Metering Kit*	1	-
4	590191601	CARBURETTOR *Throttle Lever Kit*	1	-

Ref.	Article N.	Description	Qty	Kit
6	537383401	SPRING -	1	-
7	522517901	ROD -	1	-
15	522545101	SCREW -	4	-
1	576139602	HAND GUARD -	1	-
2	590105301	SCREW KIT *KIT - Screws and Bushings*	1	-
3	590110201	CHAIN BRAKE -	1	-
4	590105602	KNEE JOINT -	1	-
5	503752202	BRAKE BAND ASSY -	1	-
6	574825601	COVER -	1	-
7	582213301	SCREW -	3	-
1	577603801	CLUTCH DRUM ASSY -	1	-
2	503432001	NEEDLE HOLDER -	1	-
3	501598002	RIM SPROCKET -	1	-
4	503752401	WASHER -	1	-
5	503272101	E-CLIP -	1	-
6	586798404	CLUTCH ASSY -	1	-
7	537360601	CLUTCH SPRING -	3	-
8	582270108	PUMP PINION -	1	-
9	589028403	OIL PUMP ASSY -	1	-
10	590119703	PUMP PISTON -	1	-
11	590120101	OIL PUMP -	1	-
12	576987401	OIL PRESSURE HOSE	1	-

Ref.	Article N.	Description	Qty	Kit
		-		
13	526818102	SCREW ITXSCM -	2	-
14	588404702	OIL HOSE -	1	-
15	501544102	OIL SCREEN -	1	-
1	594907802	CLUTCH COVER ASSY *Wrap*	1	-
1	599591701	CLUTCH COVER ASSY	1	-
2	537172604	CLUTCH COVER *Wrap*	1	-
2	575236303	CLUTCH COVER	1	-
3	537174101	CHIP GUARD *Wrap*	1	-
3	575236401	CHIP GUARD	1	-
4	526221801	SCREW CITXPANT	3	-
4	525887402	SCREW CITXPANT *Wrap*	4	-
5	501517201	CHAIN GUIDE	1	-
5	537043401	CHAIN GUIDE *Wrap*	1	-
6	537016801	COVER *Wrap*	1	-
6	576424301	COVER	1	-
7	503220001	HEXAGON NUT *Wrap*	2	-
7	505197301	NUT *-up to s/n 224400900*	2	-
9	590104701	CHAIN TENSIONER KIT	1	-
10	590104801	WORM SCREW	1	-
11	590105101	WORM WHEEL	1	-
12	531012901	CHAIN BRAKE *From s/n 224400901-, 2pcs Unlosable nuts and 2pcs Snap rings*	1	-
13	531222801	SNAP RING	1	-
1	590195605	CRANKCASE ASSY	1	-
2	537051301	BAR BOLT	2	-
3	537203001	PIN KNEE-JOINT	1	-
4	530026119	CHECK VALVE	1	-
5	537403501	FILTER	1	-
6	593806001	GUIDE BUSHING	2	-

Ref.	Article N.	Description	Qty	Kit
7	522620003	TANK CAP ASSY	1	-
9	589241101	GASKET	1	-
10	503578901	HOLDER	1	-
11	575616301	CHAIN GUIDE PLATE	1	-
12	526221801	SCREW CITXPANT	1	-
13	575841104	SCREW ITXSCM	6	-
14	537377902	CHAIN CATCHER	1	-
15	525824401	SCREW ITXSCM	2	-
16	595303003	SNAP LOCKING	3	-
17	525798103	SCREW ITXSCFT	2	-
18	534114101	CARBURETTOR AREA BASE	1	-
19	583098401	FIXING WASHER	1	-
20	525755202	SCREW ITXSCFM	4	-
21	581559201	BELLOWS	1	-
22	597909701	DAMPER *Mounting*	2	-
23	589340502	AIR NOZZLE	1	-
24	574353505	SCREW ITXSCM	1	-
29	578864701	GASKET KIT	1	-
32	590261002	SPIKE *Kit - Inner Std*	1	-
33	582179601	SEALING	1	-
34	589349001	SEALING	1	-
35	590261101	GROMMET	1	-
36	582157101	GROMMET	1	-
37	589527701	GROMMET	1	-
38	501515401	SUPPORT	1	-
1	577607401	CRANKSHAFT ASSY -	1	-
2	577572401	NEEDLE BEARING -	1	-
3	587293401	BALL BEARING -	2	-
4	582812601	RADIAL SEAL -	2	-
1	579798701	CYLINDER COVER -	1	-
1	590150305	CYLINDER ASSY *With instruction to download new Firmware*	1	-
2	547282401	PISTON ASSY	1	-

Ref.	Article N.	Description	Qty	Kit
		With instruction to download new Firmware		
3	576627401	PISTON RING *- up to s/n 572XPG; 20242704550, 572XP; 20242705666, Only for 576626706* *Piston assy*	2	-
3	529317601	PISTON RING *From s/n - 572XPG; 20242704551, 572XP; 20242705667, Only for 547282401* *Piston assy*	2	-
4	577572401	NEEDLE BEARING	1	-
5	737431200	SNAP RING	2	-
6	503552201	PLUG	1	-
7	584288701	DECOMPRESSION VALVE	1	-
8	503235111	SPARK PLUG	1	-
9	501811202	SCREW ITXSCM	4	-
10	589527901	SLEEVE	4	-
11	577239801	GASKET	1	-
12	578864701	GASKET KIT	1	-
1	578200701	FUEL TANK ASSY	1	-
2	501152901	TANK VENT ASSY	1	-
3	537208401	THROTTLE LOCKOUT	1	-
4	576162802	THROTTLE CABLE ASSY	1	-
5	544099901	SPRING	1	-
6	576956701	THROTTLE	1	-
7	720182520	PARALLEL PIN	1	-
8	501007601	SUPPORT	1	-
9	575010201	WEAR PROTECTION	1	-
10	523085501	DEFLECTION LIMITER	1	-
11	577062701	ANTIVIBRATION ELEMENT *Hard*	1	-
11	577062702	ANTIVIBRATION ELEMENT	1	-
12	503854103	ANTIVIBRATION ELEMENT *Hard*	1	-
12	503854104	ANTIVIBRATION ELEMENT	1	-
13	529578202	FUEL HOSE ASSY *With magnet*	1	-
14	503443201	FUEL FILTER *18-40 µm (Blue)*	1	-
14	503443205	FUEL FILTER *18-40 µm (Blue) Mega pack (100 pcs)*	1	-
15	522620003	TANK CAP ASSY	1	-
16	589241101	GASKET	1	-

Ref.	Article N.	Description	Qty	Kit
17	503578901	HOLDER	1	-
18	525887402	SCREW CITXPANT	1	-
19	537205601	COVER *H572 XP*	1	-
19	589698901	HANDLE INSERT *H572 XPG*	1	-
20	590567001	DECAL	1	-
1	579484302	FRONT HANDLE ASSY -	1	-
2	504064501	SCREW ITXPANM -	1	-
3	589699101	ANTIVIBRATION ELEMENT -	1	-
3	589699102	ANTIVIBRATION ELEMENT *Hard*	1	-
4	503226601	SQUARE NUT -	1	-
5	525798103	SCREW ITXSCFT -	3	-
6	575885703	SCREW ITXSCFM -	2	-
8	582654201	COVER -	1	-
10	537252501	CONTACT PLATE -	1	-
11	537088301	GROMMET -	1	-
12	590469101	PROTECTION -	1	-
1	579504003	FRONT HANDLE ASSY *Wrap*	1	-
2	579504002	FRONT HANDLE ASSY -	1	-
3	589699101	ANTIVIBRATION ELEMENT -	1	-
3	589699102	ANTIVIBRATION ELEMENT *Hard*	1	-
4	503226601	SQUARE NUT -	1	-
5	525798103	SCREW ITXSCFT -	3	-
6	575885703	SCREW ITXSCFM -	3	-

Ref.	Article N.	Description	Qty	Kit
8	582654201	COVER -	1	-
10	537252501	CONTACT PLATE -	1	-
12	525824902	SCREW ITXSCM -	1	-
13	537331007	CLUTCH COVER ASSY -	1	-
14	503220001	HEXAGON NUT -	1	-
15	589772101	SPIKE *Kit*	1	-
16	525887402	SCREW CITXPANT -	1	-
17	503922701	SPIKE -	1	-
18	537017201	SPIKE -	1	-
19	589771301	CHAIN CATCHER -	1	-
20	537024401	WEAR PROTECTION -	1	-
21	504064501	SCREW ITXPANM -	1	-
22	590469101	PROTECTION -	1	-
23	537088301	GROMMET -	1	-
1	579504001	FRONT HANDLE ASSY -	1	-
2	504064501	SCREW ITXPANM -	1	-
3	575015301	ANTIVIBRATION ELEMENT -	0	-
3	575015303	ANTIVIBRATION ELEMENT *Hard*	1	-
4	503226601	SQUARE NUT -	1	-
5	525798103	SCREW ITXSCFT -	3	-
6	575885703	SCREW ITXSCFM -	3	-
12	525824902	SCREW ITXSCM	2	-

Ref.	Article N.	Description	Qty	Kit
		-		
13	537331007	CLUTCH COVER ASSY -	1	-
14	503220001	HEXAGON NUT -	2	-
15	589772101	SPIKE *Kit*	1	-
16	525887402	SCREW CITXPANT -	1	-
17	503922701	SPIKE -	1	-
18	537017201	SPIKE -	1	-
19	589771301	CHAIN CATCHER -	1	-
20	537024401	WEAR PROTECTION -	1	-
1	579484303	FRONT HANDLE ASSY -	1	-
2	504064501	SCREW ITXPANM -	1	-
3	575015301	ANTIVIBRATION ELEMENT -	1	-
3	575015303	ANTIVIBRATION ELEMENT *Hard*	0	-
4	503226601	SQUARE NUT -	1	-
5	525798103	SCREW ITXSCFT -	3	-
6	575885703	SCREW ITXSCFM -	2	-
1	579484302	FRONT HANDLE ASSY -	1	-
2	504064501	SCREW ITXPANM -	1	-
3	589699101	ANTIVIBRATION ELEMENT -	1	-
3	589699102	ANTIVIBRATION ELEMENT *Hard*	1	-
4	503226601	SQUARE NUT -	1	-
5	525798103	SCREW ITXSCFT -	3	-

Ref.	Article N.	Description	Qty	Kit
6	575885703	SCREW ITXSCFM -	2	-
8	582654201	COVER -	1	-
10	537252501	CONTACT PLATE -	1	-
11	537088301	GROMMET -	1	-
12	590688101	GENERATOR STATOR -	1	-
13	526818102	SCREW ITXSCM -	2	-
14	590688301	THERMOSTAT ASSY -	1	-
16	588168601	FOIL ELEMENT -	1	-
17	575396402	DECAL -	1	-
18	576777202	FLYWHEEL ASSY -	1	-
19	503220401	NUT -	1	-
20	590281301	PAWL *Kit*	1	-
21	589698901	HANDLE INSERT -	1	-
22	526221801	SCREW CITXPANT -	1	-
24	577419006	INLET ELBOW *Heated*	1	-
25	731231401	HEXAGON NUT -	1	-
26	589378401	SEALING -	1	-
27	525619201	SEALING -	1	-
28	525619001	SEALING -	1	-
29	577536402	WIRING ASSY -	1	-
30	510017202	CHOKE CONTROL ASSY -	1	-
31	505156201	SCREW	1	-

Ref.	Article N.	Description	Qty	Kit
		-		
32	590469101	PROTECTION -	1	-
1	576777201	FLYWHEEL ASSY *H572 XP*	1	-
2	590281301	PAWL *Kit*	1	-
3	503220401	NUT -	1	-
4	588193102	IGNITION MODULE ASSY -	1	-
5	590298801	SPARK PLUG CAP -	1	-
6	579451801	WIRE HOLDER -	1	-
7	525824902	SCREW ITXSCM -	2	-
1	587217801	MUFFLER KIT -	1	-
2	585390001	SPARK ARRESTER -	1	-
3	724128759	SCREW CRPANM -	1	-
4	525825106	SCREW ITXSCM -	2	-
5	587351001	HEAT DEFLECTOR -	1	-
6	587350901	GASKET -	1	-
7	578864701	GASKET KIT -	1	-
8	525762503	SCREW ITXSCM -	2	-
1	582752008	CRANKCASE ASSY	1	-
1	575527604	STARTER HOUSING	1	-
2	598750301	SPRING CASSETTE ASSY	1	-
3	525887401	SCREW CITXPANT	2	-
4	531314801	STARTER PULLEY ASSY	1	-
5	576356601	SCREW ITXSCT	1	-
6	505305125	STARTER ROPE	1	-
7	537232501	STARTER HANDLE	1	-
8	525824501	SCREW CITXPANMO	4	-

Ref.	Article N.	Description	Qty	Kit
9	575525802	STARTER HOUSING	1	-
10	537283201	SLEEVE	1	-
11	575396401	DECAL *H572 XP*	1	-
12	575396402	DECAL *H572 XPG*	1	-
13	575525201	BAFFLE	1	-
1	503558513	TOOL -	1	-
2	501691701	COMBINATION WRENCH -	1	-
3	575880701	WRENCH -	1	-
4	583897101	DIAGNOSTIC TOOL KIT -	1	-
5	576183401	CABLE ASSY -	1	-
6	576952201	CABLE ASSY -	1	-
7	575527501	WINTER KIT -	1	-
8	576162601	WINTER COVER -	1	-
9	503217016	SCREW CCRPANT -	2	-
10	740420100	O-RING -	2	-
11	590261001	SPIKE *Outer, std*	1	-
12	575236501	SPIKE -	1	-
13	503222401	LOCK NUT -	2	-
14	525755202	SCREW ITXSCFM -	2	-
15	589772101	SPIKE -	1	-
16	589771301	CHAIN CATCHER -	1	-
17	537024401	WEAR PROTECTION -	1	-
18	537017201	SPIKE -	1	-

Ref.	Article N.	Description	Qty	Kit
19	503922701	SPIKE -	1	-
20	525887402	SCREW CITXPANT -	1	-
21	525824902	SCREW ITXSCM -	2	-
22	503220001	HEXAGON NUT -	2	-

FUEL TANK

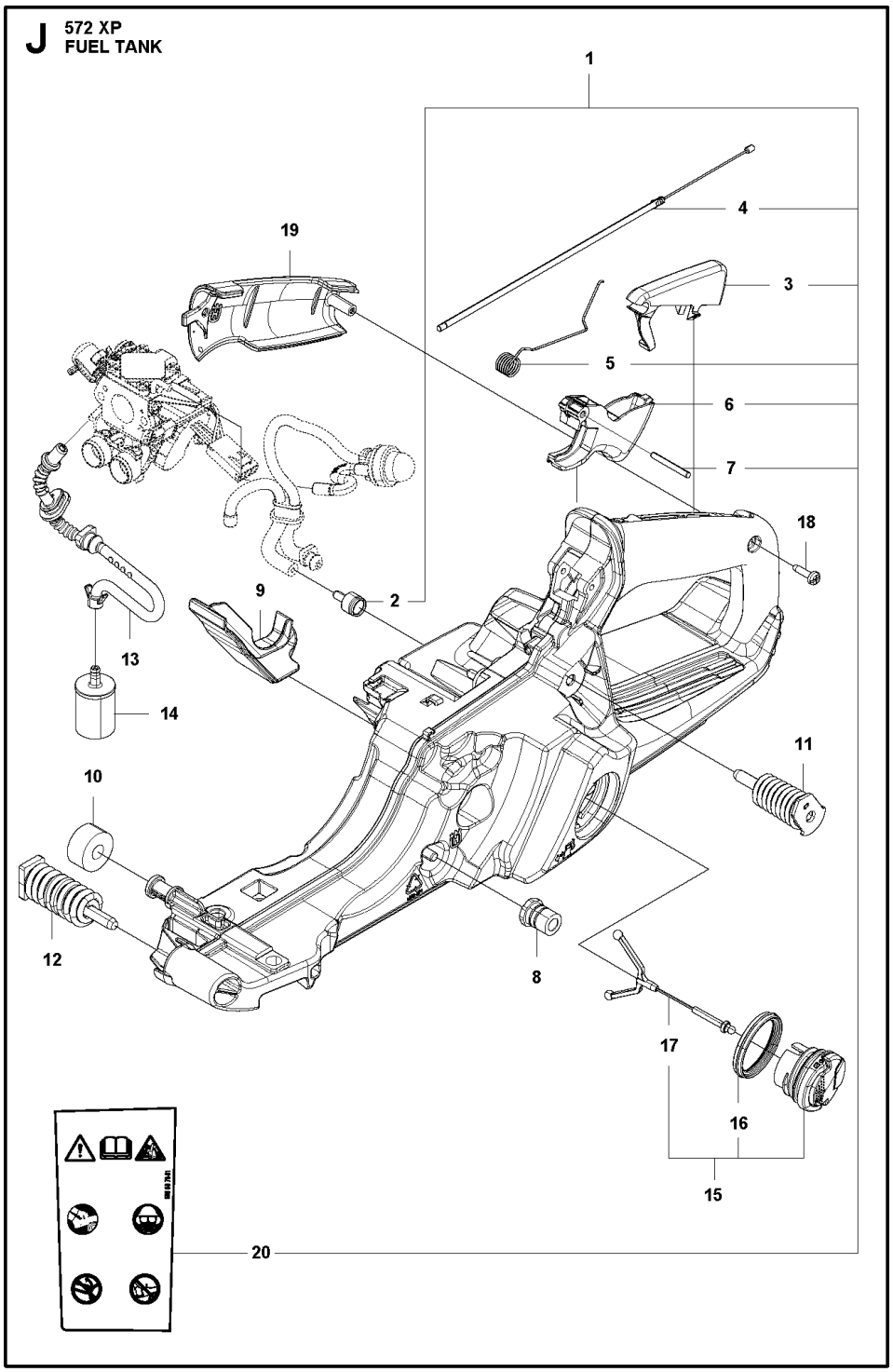

Ref.	Article N.	Description	Qty	Kit
1	596762303	AIR FILTER *Nylon Mesh - 64 Micron Rating - Black*	1	-
1	596762302	AIR FILTER *Nylon Mesh - 25 Micron Rating - Yellow*	1	-
1	596762301	AIR FILTER *Non-Woven - Clear*	1	-

Ref.	Article N.	Description	Qty	Kit
2	577419005	INLET ELBOW *Std*	1	-
2	577419006	INLET ELBOW *Heated*	1	-
3	731231401	HEXAGON NUT	1	-
4	525619201	SEALING	1	-
5	525619001	SEALING	1	-
6	577536402	WIRING ASSY	1	-
7	510017202	CHOKE CONTROL ASSY	1	-
8	505156201	SCREW	1	-
9	589378401	SEALING	1	-
10	523056801	FUEL HOSE	1	-
11	525344303	FUEL HOSE	1	-
12	581143101	SCREW ITXSCFM	2	-
13	525588101	SEALING	1	-
14	505165202	FLANGE	1	-
15	503226503	SQUARE NUT	2	-
16	501182001	BAFFLE	1	-
17	575235301	INLET PIPE *Std*	1	-
17	575235302	INLET PIPE *For extrem cold conditions.*	1	-
18	526818101	SCREW ITXSCM	4	-
19	591158301	CARBURETTOR KIT *C1M-140054E*	1	-
20	582179501	SEALING	1	-
21	590059501	SEALING	1	-
22	537213205	KNOB	1	-
23	589340701	CONTACT CLAMP	1	-
24	589340601	RETAINER	1	-
25	582025101	SUPPORT SLEEVE	1	-
26	503936601	PURGE	1	-
1	591158301	CARBURETTOR KIT *C1M-140054E*	1	-
2	522518901	GASKET KIT *GASKET KIT*	1	-
3	590191501	REPAIR KIT *Metering Kit*	1	-
4	590191601	CARBURETTOR *Throttle Lever Kit*	1	-

Ref.	Article N.	Description	Qty	Kit
6	537383401	SPRING -	1	-
7	522517901	ROD -	1	-
15	522545101	SCREW -	4	-
1	576139602	HAND GUARD -	1	-
2	590105301	SCREW KIT *KIT - Screws and Bushings*	1	-
3	590110201	CHAIN BRAKE -	1	-
4	590105602	KNEE JOINT -	1	-
5	503752202	BRAKE BAND ASSY -	1	-
6	574825601	COVER -	1	-
7	582213301	SCREW -	3	-
1	577603801	CLUTCH DRUM ASSY -	1	-
2	503432001	NEEDLE HOLDER -	1	-
3	501598002	RIM SPROCKET -	1	-
4	503752401	WASHER -	1	-
5	503272101	E-CLIP -	1	-
6	586798404	CLUTCH ASSY -	1	-
7	537360601	CLUTCH SPRING -	3	-
8	582270108	PUMP PINION -	1	-
9	589028403	OIL PUMP ASSY -	1	-
10	590119703	PUMP PISTON -	1	-
11	590120101	OIL PUMP -	1	-
12	576987401	OIL PRESSURE HOSE	1	-

Ref.	Article N.	Description	Qty	Kit
		-		
13	526818102	SCREW ITXSCM -	2	-
14	588404702	OIL HOSE -	1	-
15	501544102	OIL SCREEN -	1	-
1	594907802	CLUTCH COVER ASSY *Wrap*	1	-
1	599591701	CLUTCH COVER ASSY	1	-
2	537172604	CLUTCH COVER *Wrap*	1	-
2	575236303	CLUTCH COVER	1	-
3	537174101	CHIP GUARD *Wrap*	1	-
3	575236401	CHIP GUARD	1	-
4	526221801	SCREW CITXPANT	3	-
4	525887402	SCREW CITXPANT *Wrap*	4	-
5	501517201	CHAIN GUIDE	1	-
5	537043401	CHAIN GUIDE *Wrap*	1	-
6	537016801	COVER *Wrap*	1	-
6	576424301	COVER	1	-
7	503220001	HEXAGON NUT *Wrap*	2	-
7	505197301	NUT *-up to s/n 224400900*	2	-
9	590104701	CHAIN TENSIONER KIT	1	-
10	590104801	WORM SCREW	1	-
11	590105101	WORM WHEEL	1	-
12	531012901	CHAIN BRAKE *From s/n 224400901-, 2pcs Unlosable nuts and 2pcs Snap rings*	1	-
13	531222801	SNAP RING	1	-
1	590195605	CRANKCASE ASSY	1	-
2	537051301	BAR BOLT	2	-
3	537203001	PIN KNEE-JOINT	1	-
4	530026119	CHECK VALVE	1	-
5	537403501	FILTER	1	-
6	593806001	GUIDE BUSHING	2	-

Ref.	Article N.	Description	Qty	Kit
7	522620003	TANK CAP ASSY	1	-
9	589241101	GASKET	1	-
10	503578901	HOLDER	1	-
11	575616301	CHAIN GUIDE PLATE	1	-
12	526221801	SCREW CITXPANT	1	-
13	575841104	SCREW ITXSCM	6	-
14	537377902	CHAIN CATCHER	1	-
15	525824401	SCREW ITXSCM	2	-
16	595303003	SNAP LOCKING	3	-
17	525798103	SCREW ITXSCFT	2	-
18	534114101	CARBURETTOR AREA BASE	1	-
19	583098401	FIXING WASHER	1	-
20	525755202	SCREW ITXSCFM	4	-
21	581559201	BELLOWS	1	-
22	597909701	DAMPER *Mounting*	2	-
23	589340502	AIR NOZZLE	1	-
24	574353505	SCREW ITXSCM	1	-
29	578864701	GASKET KIT	1	-
32	590261002	SPIKE *Kit - Inner Std*	1	-
33	582179601	SEALING	1	-
34	589349001	SEALING	1	-
35	590261101	GROMMET	1	-
36	582157101	GROMMET	1	-
37	589527701	GROMMET	1	-
38	501515401	SUPPORT	1	-
1	577607401	CRANKSHAFT ASSY -	1	-
2	577572401	NEEDLE BEARING -	1	-
3	587293401	BALL BEARING -	2	-
4	582812601	RADIAL SEAL -	2	-
1	579798701	CYLINDER COVER -	1	-
1	590150305	CYLINDER ASSY *With instruction to download new Firmware*	1	-
2	547282401	PISTON ASSY	1	-

Ref.	Article N.	Description	Qty	Kit
		With instruction to download new Firmware		
3	576627401	PISTON RING *- up to s/n 572XPG; 20242704550, 572XP; 20242705666, Only for 576626706* *Piston assy*	2	-
3	529317601	PISTON RING *From s/n - 572XPG; 20242704551, 572XP; 20242705667, Only for 547282401* *Piston assy*	2	-
4	577572401	NEEDLE BEARING	1	-
5	737431200	SNAP RING	2	-
6	503552201	PLUG	1	-
7	584288701	DECOMPRESSION VALVE	1	-
8	503235111	SPARK PLUG	1	-
9	501811202	SCREW ITXSCM	4	-
10	589527901	SLEEVE	4	-
11	577239801	GASKET	1	-
12	578864701	GASKET KIT	1	-
1	578200701	FUEL TANK ASSY	1	-
2	501152901	TANK VENT ASSY	1	-
3	537208401	THROTTLE LOCKOUT	1	-
4	576162802	THROTTLE CABLE ASSY	1	-
5	544099901	SPRING	1	-
6	576956701	THROTTLE	1	-
7	720182520	PARALLEL PIN	1	-
8	501007601	SUPPORT	1	-
9	575010201	WEAR PROTECTION	1	-
10	523085501	DEFLECTION LIMITER	1	-
11	577062701	ANTIVIBRATION ELEMENT *Hard*	1	-
11	577062702	ANTIVIBRATION ELEMENT	1	-
12	503854103	ANTIVIBRATION ELEMENT *Hard*	1	-
12	503854104	ANTIVIBRATION ELEMENT	1	-
13	529578202	FUEL HOSE ASSY *With magnet*	1	-
14	503443201	FUEL FILTER *18-40 µm (Blue)*	1	-
14	503443205	FUEL FILTER *18-40 µm (Blue) Mega pack (100 pcs)*	1	-
15	522620003	TANK CAP ASSY	1	-
16	589241101	GASKET	1	-

Ref.	Article N.	Description	Qty	Kit
17	503578901	HOLDER	1	-
18	525887402	SCREW CITXPANT	1	-
19	537205601	COVER *H572 XP*	1	-
19	589698901	HANDLE INSERT *H572 XPG*	1	-
20	590567001	DECAL	1	-
1	579484302	FRONT HANDLE ASSY -	1	-
2	504064501	SCREW ITXPANM -	1	-
3	589699101	ANTIVIBRATION ELEMENT -	1	-
3	589699102	ANTIVIBRATION ELEMENT *Hard*	1	-
4	503226601	SQUARE NUT -	1	-
5	525798103	SCREW ITXSCFT -	3	-
6	575885703	SCREW ITXSCFM -	2	-
8	582654201	COVER -	1	-
10	537252501	CONTACT PLATE -	1	-
11	537088301	GROMMET -	1	-
12	590469101	PROTECTION -	1	-
1	579504003	FRONT HANDLE ASSY *Wrap*	1	-
2	579504002	FRONT HANDLE ASSY -	1	-
3	589699101	ANTIVIBRATION ELEMENT -	1	-
3	589699102	ANTIVIBRATION ELEMENT *Hard*	1	-
4	503226601	SQUARE NUT -	1	-
5	525798103	SCREW ITXSCFT -	3	-
6	575885703	SCREW ITXSCFM -	3	-

Ref.	Article N.	Description	Qty	Kit
8	582654201	COVER -	1	-
10	537252501	CONTACT PLATE -	1	-
12	525824902	SCREW ITXSCM -	1	-
13	537331007	CLUTCH COVER ASSY -	1	-
14	503220001	HEXAGON NUT -	1	-
15	589772101	SPIKE *Kit*	1	-
16	525887402	SCREW CITXPANT -	1	-
17	503922701	SPIKE -	1	-
18	537017201	SPIKE -	1	-
19	589771301	CHAIN CATCHER -	1	-
20	537024401	WEAR PROTECTION -	1	-
21	504064501	SCREW ITXPANM -	1	-
22	590469101	PROTECTION -	1	-
23	537088301	GROMMET -	1	-
1	579504001	FRONT HANDLE ASSY -	1	-
2	504064501	SCREW ITXPANM -	1	-
3	575015301	ANTIVIBRATION ELEMENT -	0	-
3	575015303	ANTIVIBRATION ELEMENT *Hard*	1	-
4	503226601	SQUARE NUT -	1	-
5	525798103	SCREW ITXSCFT -	3	-
6	575885703	SCREW ITXSCFM -	3	-
12	525824902	SCREW ITXSCM	2	-

Ref.	Article N.	Description	Qty	Kit
		-		
13	537331007	CLUTCH COVER ASSY -	1	-
14	503220001	HEXAGON NUT -	2	-
15	589772101	SPIKE *Kit*	1	-
16	525887402	SCREW CITXPANT -	1	-
17	503922701	SPIKE -	1	-
18	537017201	SPIKE -	1	-
19	589771301	CHAIN CATCHER -	1	-
20	537024401	WEAR PROTECTION -	1	-
1	579484303	FRONT HANDLE ASSY -	1	-
2	504064501	SCREW ITXPANM -	1	-
3	575015301	ANTIVIBRATION ELEMENT -	1	-
3	575015303	ANTIVIBRATION ELEMENT *Hard*	0	-
4	503226601	SQUARE NUT -	1	-
5	525798103	SCREW ITXSCFT -	3	-
6	575885703	SCREW ITXSCFM -	2	-
1	579484302	FRONT HANDLE ASSY -	1	-
2	504064501	SCREW ITXPANM -	1	-
3	589699101	ANTIVIBRATION ELEMENT -	1	-
3	589699102	ANTIVIBRATION ELEMENT *Hard*	1	-
4	503226601	SQUARE NUT -	1	-
5	525798103	SCREW ITXSCFT -	3	-

Ref.	Article N.	Description	Qty	Kit
6	575885703	SCREW ITXSCFM -	2	-
8	582654201	COVER -	1	-
10	537252501	CONTACT PLATE -	1	-
11	537088301	GROMMET -	1	-
12	590688101	GENERATOR STATOR -	1	-
13	526818102	SCREW ITXSCM -	2	-
14	590688301	THERMOSTAT ASSY -	1	-
16	588168601	FOIL ELEMENT -	1	-
17	575396402	DECAL -	1	-
18	576777202	FLYWHEEL ASSY -	1	-
19	503220401	NUT -	1	-
20	590281301	PAWL *Kit*	1	-
21	589698901	HANDLE INSERT -	1	-
22	526221801	SCREW CITXPANT -	1	-
24	577419006	INLET ELBOW *Heated*	1	-
25	731231401	HEXAGON NUT -	1	-
26	589378401	SEALING -	1	-
27	525619201	SEALING -	1	-
28	525619001	SEALING -	1	-
29	577536402	WIRING ASSY -	1	-
30	510017202	CHOKE CONTROL ASSY -	1	-
31	505156201	SCREW	1	-

Ref.	Article N.	Description	Qty	Kit
		-		
32	590469101	PROTECTION -	1	-
1	576777201	FLYWHEEL ASSY *H572 XP*	1	-
2	590281301	PAWL *Kit*	1	-
3	503220401	NUT -	1	-
4	588193102	IGNITION MODULE ASSY -	1	-
5	590298801	SPARK PLUG CAP -	1	-
6	579451801	WIRE HOLDER -	1	-
7	525824902	SCREW ITXSCM -	2	-
1	587217801	MUFFLER KIT -	1	-
2	585390001	SPARK ARRESTER -	1	-
3	724128759	SCREW CRPANM -	1	-
4	525825106	SCREW ITXSCM -	2	-
5	587351001	HEAT DEFLECTOR -	1	-
6	587350901	GASKET -	1	-
7	578864701	GASKET KIT -	1	-
8	525762503	SCREW ITXSCM -	2	-
1	582752008	CRANKCASE ASSY	1	-
1	575527604	STARTER HOUSING	1	-
2	598750301	SPRING CASSETTE ASSY	1	-
3	525887401	SCREW CITXPANT	2	-
4	531314801	STARTER PULLEY ASSY	1	-
5	576356601	SCREW ITXSCT	1	-
6	505305125	STARTER ROPE	1	-
7	537232501	STARTER HANDLE	1	-
8	525824501	SCREW CITXPANMO	4	-

Ref.	Article N.	Description	Qty	Kit
9	575525802	STARTER HOUSING	1	-
10	537283201	SLEEVE	1	-
11	575396401	DECAL *H572 XP*	1	-
12	575396402	DECAL *H572 XPG*	1	-
13	575525201	BAFFLE	1	-
1	503558513	TOOL -	1	-
2	501691701	COMBINATION WRENCH -	1	-
3	575880701	WRENCH -	1	-
4	583897101	DIAGNOSTIC TOOL KIT -	1	-
5	576183401	CABLE ASSY -	1	-
6	576952201	CABLE ASSY -	1	-
7	575527501	WINTER KIT -	1	-
8	576162601	WINTER COVER -	1	-
9	503217016	SCREW CCRPANT -	2	-
10	740420100	O-RING -	2	-
11	590261001	SPIKE *Outer, std*	1	-
12	575236501	SPIKE -	1	-
13	503222401	LOCK NUT -	2	-
14	525755202	SCREW ITXSCFM -	2	-
15	589772101	SPIKE -	1	-
16	589771301	CHAIN CATCHER -	1	-
17	537024401	WEAR PROTECTION -	1	-
18	537017201	SPIKE -	1	-

Ref.	Article N.	Description	Qty	Kit
19	503922701	SPIKE -	1	-
20	525887402	SCREW CITXPANT -	1	-
21	525824902	SCREW ITXSCM -	2	-
22	503220001	HEXAGON NUT -	2	-

HANDLE

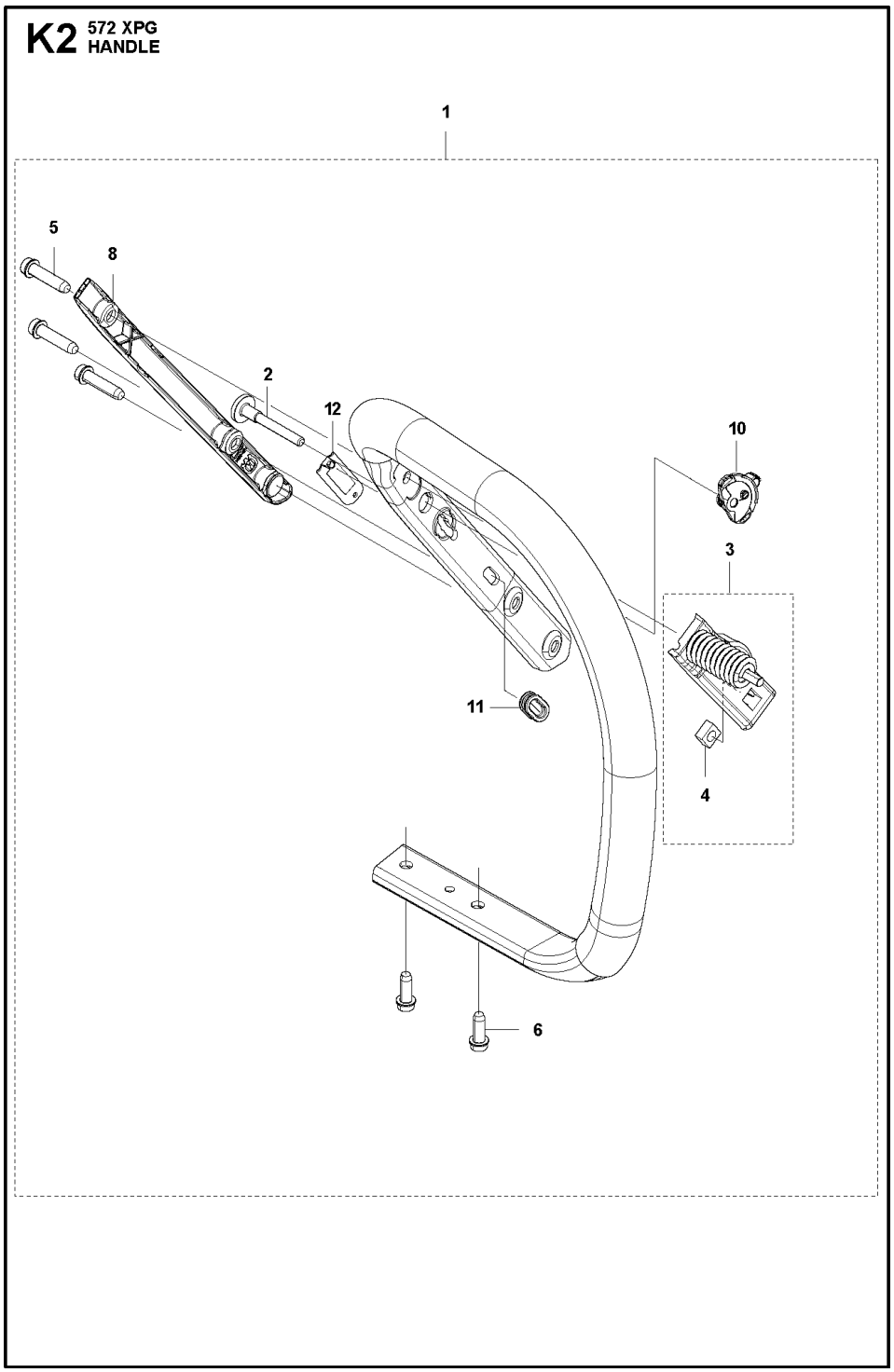

Ref.	Article N.	Description	Qty	Kit
1	596762303	AIR FILTER *Nylon Mesh - 64 Micron Rating - Black*	1	-
1	596762302	AIR FILTER *Nylon Mesh - 25 Micron Rating - Yellow*	1	-
1	596762301	AIR FILTER *Non-Woven - Clear*	1	-

Ref.	Article N.	Description	Qty	Kit
2	577419005	INLET ELBOW *Std*	1	-
2	577419006	INLET ELBOW *Heated*	1	-
3	731231401	HEXAGON NUT	1	-
4	525619201	SEALING	1	-
5	525619001	SEALING	1	-
6	577536402	WIRING ASSY	1	-
7	510017202	CHOKE CONTROL ASSY	1	-
8	505156201	SCREW	1	-
9	589378401	SEALING	1	-
10	523056801	FUEL HOSE	1	-
11	525344303	FUEL HOSE	1	-
12	581143101	SCREW ITXSCFM	2	-
13	525588101	SEALING	1	-
14	505165202	FLANGE	1	-
15	503226503	SQUARE NUT	2	-
16	501182001	BAFFLE	1	-
17	575235301	INLET PIPE *Std*	1	-
17	575235302	INLET PIPE *For extrem cold conditions.*	1	-
18	526818101	SCREW ITXSCM	4	-
19	591158301	CARBURETTOR KIT *C1M-140054E*	1	-
20	582179501	SEALING	1	-
21	590059501	SEALING	1	-
22	537213205	KNOB	1	-
23	589340701	CONTACT CLAMP	1	-
24	589340601	RETAINER	1	-
25	582025101	SUPPORT SLEEVE	1	-
26	503936601	PURGE	1	-
1	591158301	CARBURETTOR KIT *C1M-140054E*	1	-
2	522518901	GASKET KIT *GASKET KIT*	1	-
3	590191501	REPAIR KIT *Metering Kit*	1	-
4	590191601	CARBURETTOR *Throttle Lever Kit*	1	-

Ref.	Article N.	Description	Qty	Kit
6	537383401	SPRING -	1	-
7	522517901	ROD -	1	-
15	522545101	SCREW -	4	-
1	576139602	HAND GUARD -	1	-
2	590105301	SCREW KIT *KIT - Screws and Bushings*	1	-
3	590110201	CHAIN BRAKE -	1	-
4	590105602	KNEE JOINT -	1	-
5	503752202	BRAKE BAND ASSY -	1	-
6	574825601	COVER -	1	-
7	582213301	SCREW -	3	-
1	577603801	CLUTCH DRUM ASSY -	1	-
2	503432001	NEEDLE HOLDER -	1	-
3	501598002	RIM SPROCKET -	1	-
4	503752401	WASHER -	1	-
5	503272101	E-CLIP -	1	-
6	586798404	CLUTCH ASSY -	1	-
7	537360601	CLUTCH SPRING -	3	-
8	582270108	PUMP PINION -	1	-
9	589028403	OIL PUMP ASSY -	1	-
10	590119703	PUMP PISTON -	1	-
11	590120101	OIL PUMP -	1	-
12	576987401	OIL PRESSURE HOSE	1	-

Ref.	Article N.	Description	Qty	Kit
		-		
13	526818102	SCREW ITXSCM -	2	-
14	588404702	OIL HOSE -	1	-
15	501544102	OIL SCREEN -	1	-
1	594907802	CLUTCH COVER ASSY *Wrap*	1	-
1	599591701	CLUTCH COVER ASSY	1	-
2	537172604	CLUTCH COVER *Wrap*	1	-
2	575236303	CLUTCH COVER	1	-
3	537174101	CHIP GUARD *Wrap*	1	-
3	575236401	CHIP GUARD	1	-
4	526221801	SCREW CITXPANT	3	-
4	525887402	SCREW CITXPANT *Wrap*	4	-
5	501517201	CHAIN GUIDE	1	-
5	537043401	CHAIN GUIDE *Wrap*	1	-
6	537016801	COVER *Wrap*	1	-
6	576424301	COVER	1	-
7	503220001	HEXAGON NUT *Wrap*	2	-
7	505197301	NUT *-up to s/n 224400900*	2	-
9	590104701	CHAIN TENSIONER KIT	1	-
10	590104801	WORM SCREW	1	-
11	590105101	WORM WHEEL	1	-
12	531012901	CHAIN BRAKE *From s/n 224400901-, 2pcs Unlosable nuts and 2pcs Snap rings*	1	-
13	531222801	SNAP RING	1	-
1	590195605	CRANKCASE ASSY	1	-
2	537051301	BAR BOLT	2	-
3	537203001	PIN KNEE-JOINT	1	-
4	530026119	CHECK VALVE	1	-
5	537403501	FILTER	1	-
6	593806001	GUIDE BUSHING	2	-

Ref.	Article N.	Description	Qty	Kit
7	522620003	TANK CAP ASSY	1	-
9	589241101	GASKET	1	-
10	503578901	HOLDER	1	-
11	575616301	CHAIN GUIDE PLATE	1	-
12	526221801	SCREW CITXPANT	1	-
13	575841104	SCREW ITXSCM	6	-
14	537377902	CHAIN CATCHER	1	-
15	525824401	SCREW ITXSCM	2	-
16	595303003	SNAP LOCKING	3	-
17	525798103	SCREW ITXSCFT	2	-
18	534114101	CARBURETTOR AREA BASE	1	-
19	583098401	FIXING WASHER	1	-
20	525755202	SCREW ITXSCFM	4	-
21	581559201	BELLOWS	1	-
22	597909701	DAMPER *Mounting*	2	-
23	589340502	AIR NOZZLE	1	-
24	574353505	SCREW ITXSCM	1	-
29	578864701	GASKET KIT	1	-
32	590261002	SPIKE *Kit - Inner Std*	1	-
33	582179601	SEALING	1	-
34	589349001	SEALING	1	-
35	590261101	GROMMET	1	-
36	582157101	GROMMET	1	-
37	589527701	GROMMET	1	-
38	501515401	SUPPORT	1	-
1	577607401	CRANKSHAFT ASSY -	1	-
2	577572401	NEEDLE BEARING -	1	-
3	587293401	BALL BEARING -	2	-
4	582812601	RADIAL SEAL -	2	-
1	579798701	CYLINDER COVER -	1	-
1	590150305	CYLINDER ASSY *With instruction to download new Firmware*	1	-
2	547282401	PISTON ASSY	1	-

Ref.	Article N.	Description	Qty	Kit
		With instruction to download new Firmware		
3	576627401	PISTON RING *- up to s/n 572XPG; 20242704550, 572XP; 20242705666, Only for 576626706* *Piston assy*	2	-
3	529317601	PISTON RING *From s/n - 572XPG; 20242704551, 572XP; 20242705667, Only for 547282401* *Piston assy*	2	-
4	577572401	NEEDLE BEARING	1	-
5	737431200	SNAP RING	2	-
6	503552201	PLUG	1	-
7	584288701	DECOMPRESSION VALVE	1	-
8	503235111	SPARK PLUG	1	-
9	501811202	SCREW ITXSCM	4	-
10	589527901	SLEEVE	4	-
11	577239801	GASKET	1	-
12	578864701	GASKET KIT	1	-
1	578200701	FUEL TANK ASSY	1	-
2	501152901	TANK VENT ASSY	1	-
3	537208401	THROTTLE LOCKOUT	1	-
4	576162802	THROTTLE CABLE ASSY	1	-
5	544099901	SPRING	1	-
6	576956701	THROTTLE	1	-
7	720182520	PARALLEL PIN	1	-
8	501007601	SUPPORT	1	-
9	575010201	WEAR PROTECTION	1	-
10	523085501	DEFLECTION LIMITER	1	-
11	577062701	ANTIVIBRATION ELEMENT *Hard*	1	-
11	577062702	ANTIVIBRATION ELEMENT	1	-
12	503854103	ANTIVIBRATION ELEMENT *Hard*	1	-
12	503854104	ANTIVIBRATION ELEMENT	1	-
13	529578202	FUEL HOSE ASSY *With magnet*	1	-
14	503443201	FUEL FILTER *18-40 µm (Blue)*	1	-
14	503443205	FUEL FILTER *18-40 µm (Blue) Mega pack (100 pcs)*	1	-
15	522620003	TANK CAP ASSY	1	-
16	589241101	GASKET	1	-

Ref.	Article N.	Description	Qty	Kit
17	503578901	HOLDER	1	-
18	525887402	SCREW CITXPANT	1	-
19	537205601	COVER *H572 XP*	1	-
19	589698901	HANDLE INSERT *H572 XPG*	1	-
20	590567001	DECAL	1	-
1	579484302	FRONT HANDLE ASSY -	1	-
2	504064501	SCREW ITXPANM -	1	-
3	589699101	ANTIVIBRATION ELEMENT -	1	-
3	589699102	ANTIVIBRATION ELEMENT *Hard*	1	-
4	503226601	SQUARE NUT -	1	-
5	525798103	SCREW ITXSCFT -	3	-
6	575885703	SCREW ITXSCFM -	2	-
8	582654201	COVER -	1	-
10	537252501	CONTACT PLATE -	1	-
11	537088301	GROMMET -	1	-
12	590469101	PROTECTION -	1	-
1	579504003	FRONT HANDLE ASSY *Wrap*	1	-
2	579504002	FRONT HANDLE ASSY -	1	-
3	589699101	ANTIVIBRATION ELEMENT -	1	-
3	589699102	ANTIVIBRATION ELEMENT *Hard*	1	-
4	503226601	SQUARE NUT -	1	-
5	525798103	SCREW ITXSCFT -	3	-
6	575885703	SCREW ITXSCFM -	3	-

Ref.	Article N.	Description	Qty	Kit
8	582654201	COVER -	1	-
10	537252501	CONTACT PLATE -	1	-
12	525824902	SCREW ITXSCM -	1	-
13	537331007	CLUTCH COVER ASSY -	1	-
14	503220001	HEXAGON NUT -	1	-
15	589772101	SPIKE *Kit*	1	-
16	525887402	SCREW CITXPANT -	1	-
17	503922701	SPIKE -	1	-
18	537017201	SPIKE -	1	-
19	589771301	CHAIN CATCHER -	1	-
20	537024401	WEAR PROTECTION -	1	-
21	504064501	SCREW ITXPANM -	1	-
22	590469101	PROTECTION -	1	-
23	537088301	GROMMET -	1	-
1	579504001	FRONT HANDLE ASSY -	1	-
2	504064501	SCREW ITXPANM -	1	-
3	575015301	ANTIVIBRATION ELEMENT -	0	-
3	575015303	ANTIVIBRATION ELEMENT *Hard*	1	-
4	503226601	SQUARE NUT -	1	-
5	525798103	SCREW ITXSCFT -	3	-
6	575885703	SCREW ITXSCFM -	3	-
12	525824902	SCREW ITXSCM	2	-

Ref.	Article N.	Description	Qty	Kit
		-		
13	537331007	CLUTCH COVER ASSY -	1	-
14	503220001	HEXAGON NUT -	2	-
15	589772101	SPIKE *Kit*	1	-
16	525887402	SCREW CITXPANT -	1	-
17	503922701	SPIKE -	1	-
18	537017201	SPIKE -	1	-
19	589771301	CHAIN CATCHER -	1	-
20	537024401	WEAR PROTECTION -	1	-
1	579484303	FRONT HANDLE ASSY -	1	-
2	504064501	SCREW ITXPANM -	1	-
3	575015301	ANTIVIBRATION ELEMENT -	1	-
3	575015303	ANTIVIBRATION ELEMENT *Hard*	0	-
4	503226601	SQUARE NUT -	1	-
5	525798103	SCREW ITXSCFT -	3	-
6	575885703	SCREW ITXSCFM -	2	-
1	579484302	FRONT HANDLE ASSY -	1	-
2	504064501	SCREW ITXPANM -	1	-
3	589699101	ANTIVIBRATION ELEMENT -	1	-
3	589699102	ANTIVIBRATION ELEMENT *Hard*	1	-
4	503226601	SQUARE NUT -	1	-
5	525798103	SCREW ITXSCFT -	3	-

Ref.	Article N.	Description	Qty	Kit
6	575885703	SCREW ITXSCFM -	2	-
8	582654201	COVER -	1	-
10	537252501	CONTACT PLATE -	1	-
11	537088301	GROMMET -	1	-
12	590688101	GENERATOR STATOR -	1	-
13	526818102	SCREW ITXSCM -	2	-
14	590688301	THERMOSTAT ASSY -	1	-
16	588168601	FOIL ELEMENT -	1	-
17	575396402	DECAL -	1	-
18	576777202	FLYWHEEL ASSY -	1	-
19	503220401	NUT -	1	-
20	590281301	PAWL *Kit*	1	-
21	589698901	HANDLE INSERT -	1	-
22	526221801	SCREW CITXPANT -	1	-
24	577419006	INLET ELBOW *Heated*	1	-
25	731231401	HEXAGON NUT -	1	-
26	589378401	SEALING -	1	-
27	525619201	SEALING -	1	-
28	525619001	SEALING -	1	-
29	577536402	WIRING ASSY -	1	-
30	510017202	CHOKE CONTROL ASSY -	1	-
31	505156201	SCREW	1	-

Ref.	Article N.	Description	Qty	Kit
		-		
32	590469101	PROTECTION -	1	-
1	576777201	FLYWHEEL ASSY *H572 XP*	1	-
2	590281301	PAWL *Kit*	1	-
3	503220401	NUT -	1	-
4	588193102	IGNITION MODULE ASSY -	1	-
5	590298801	SPARK PLUG CAP -	1	-
6	579451801	WIRE HOLDER -	1	-
7	525824902	SCREW ITXSCM -	2	-
1	587217801	MUFFLER KIT -	1	-
2	585390001	SPARK ARRESTER -	1	-
3	724128759	SCREW CRPANM -	1	-
4	525825106	SCREW ITXSCM -	2	-
5	587351001	HEAT DEFLECTOR -	1	-
6	587350901	GASKET -	1	-
7	578864701	GASKET KIT -	1	-
8	525762503	SCREW ITXSCM -	2	-
1	582752008	CRANKCASE ASSY	1	-
1	575527604	STARTER HOUSING	1	-
2	598750301	SPRING CASSETTE ASSY	1	-
3	525887401	SCREW CITXPANT	2	-
4	531314801	STARTER PULLEY ASSY	1	-
5	576356601	SCREW ITXSCT	1	-
6	505305125	STARTER ROPE	1	-
7	537232501	STARTER HANDLE	1	-
8	525824501	SCREW CITXPANMO	4	-

Ref.	Article N.	Description	Qty	Kit
9	575525802	STARTER HOUSING	1	-
10	537283201	SLEEVE	1	-
11	575396401	DECAL *H572 XP*	1	-
12	575396402	DECAL *H572 XPG*	1	-
13	575525201	BAFFLE	1	-
1	503558513	TOOL -	1	-
2	501691701	COMBINATION WRENCH -	1	-
3	575880701	WRENCH -	1	-
4	583897101	DIAGNOSTIC TOOL KIT -	1	-
5	576183401	CABLE ASSY -	1	-
6	576952201	CABLE ASSY -	1	-
7	575527501	WINTER KIT -	1	-
8	576162601	WINTER COVER -	1	-
9	503217016	SCREW CCRPANT -	2	-
10	740420100	O-RING -	2	-
11	590261001	SPIKE *Outer, std*	1	-
12	575236501	SPIKE -	1	-
13	503222401	LOCK NUT -	2	-
14	525755202	SCREW ITXSCFM -	2	-
15	589772101	SPIKE -	1	-
16	589771301	CHAIN CATCHER -	1	-
17	537024401	WEAR PROTECTION -	1	-
18	537017201	SPIKE -	1	-

Ref.	Article N.	Description	Qty	Kit
19	503922701	SPIKE -	1	-
20	525887402	SCREW CITXPANT -	1	-
21	525824902	SCREW ITXSCM -	2	-
22	503220001	HEXAGON NUT -	2	-

HANDLE

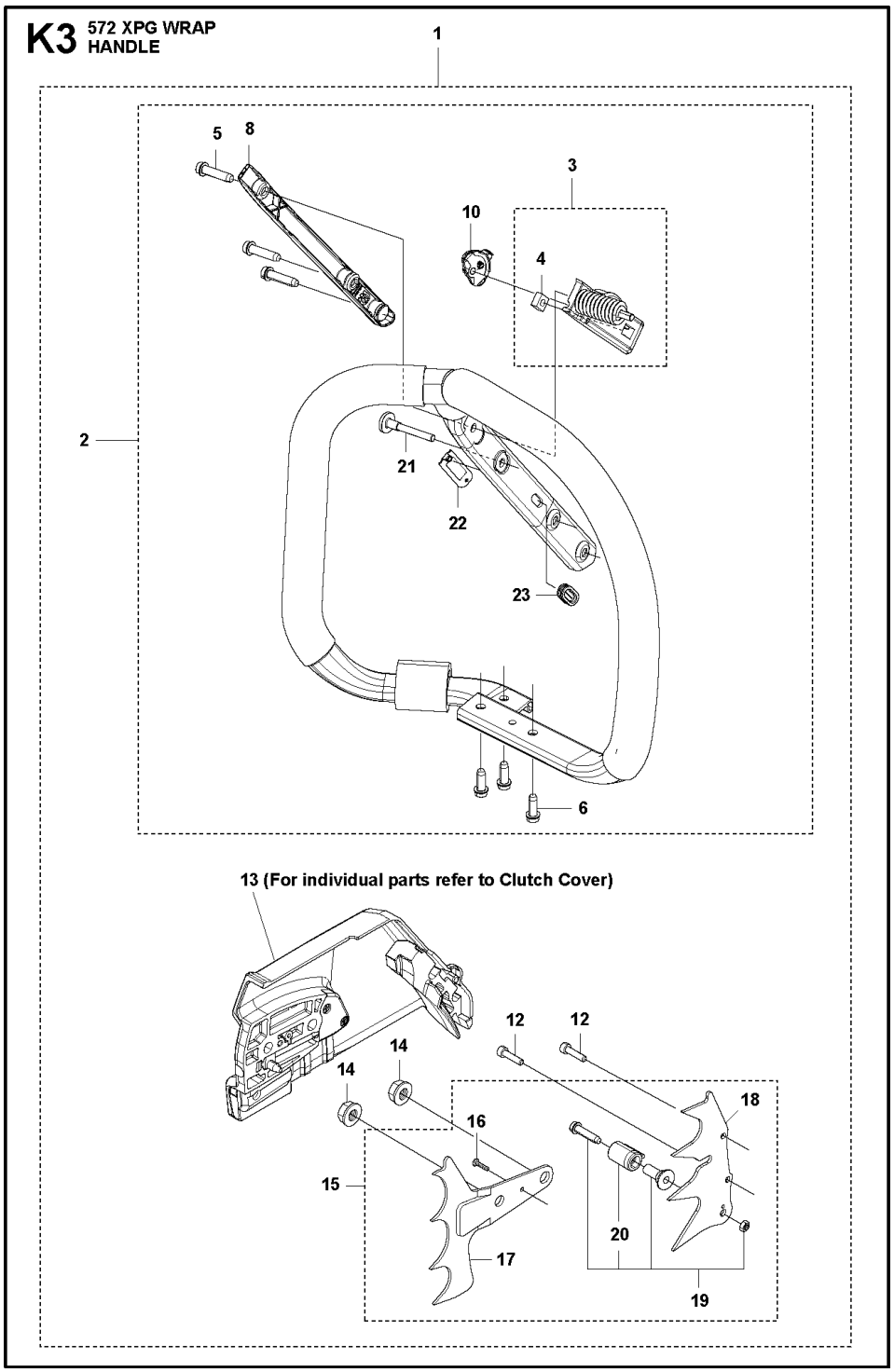

Ref.	Article N.	Description	Qty	Kit
1	596762303	AIR FILTER *Nylon Mesh - 64 Micron Rating - Black*	1	-
1	596762302	AIR FILTER *Nylon Mesh - 25 Micron Rating - Yellow*	1	-
1	596762301	AIR FILTER *Non-Woven - Clear*	1	-

Ref.	Article N.	Description	Qty	Kit
2	577419005	INLET ELBOW *Std*	1	-
2	577419006	INLET ELBOW *Heated*	1	-
3	731231401	HEXAGON NUT	1	-
4	525619201	SEALING	1	-
5	525619001	SEALING	1	-
6	577536402	WIRING ASSY	1	-
7	510017202	CHOKE CONTROL ASSY	1	-
8	505156201	SCREW	1	-
9	589378401	SEALING	1	-
10	523056801	FUEL HOSE	1	-
11	525344303	FUEL HOSE	1	-
12	581143101	SCREW ITXSCFM	2	-
13	525588101	SEALING	1	-
14	505165202	FLANGE	1	-
15	503226503	SQUARE NUT	2	-
16	501182001	BAFFLE	1	-
17	575235301	INLET PIPE *Std*	1	-
17	575235302	INLET PIPE *For extrem cold conditions.*	1	-
18	526818101	SCREW ITXSCM	4	-
19	591158301	CARBURETTOR KIT *C1M-140054E*	1	-
20	582179501	SEALING	1	-
21	590059501	SEALING	1	-
22	537213205	KNOB	1	-
23	589340701	CONTACT CLAMP	1	-
24	589340601	RETAINER	1	-
25	582025101	SUPPORT SLEEVE	1	-
26	503936601	PURGE	1	-
1	591158301	CARBURETTOR KIT *C1M-140054E*	1	-
2	522518901	GASKET KIT *GASKET KIT*	1	-
3	590191501	REPAIR KIT *Metering Kit*	1	-
4	590191601	CARBURETTOR *Throttle Lever Kit*	1	-

Ref.	Article N.	Description	Qty	Kit
6	537383401	SPRING -	1	-
7	522517901	ROD -	1	-
15	522545101	SCREW -	4	-
1	576139602	HAND GUARD -	1	-
2	590105301	SCREW KIT *KIT - Screws and Bushings*	1	-
3	590110201	CHAIN BRAKE -	1	-
4	590105602	KNEE JOINT -	1	-
5	503752202	BRAKE BAND ASSY -	1	-
6	574825601	COVER -	1	-
7	582213301	SCREW -	3	-
1	577603801	CLUTCH DRUM ASSY -	1	-
2	503432001	NEEDLE HOLDER -	1	-
3	501598002	RIM SPROCKET -	1	-
4	503752401	WASHER -	1	-
5	503272101	E-CLIP -	1	-
6	586798404	CLUTCH ASSY -	1	-
7	537360601	CLUTCH SPRING -	3	-
8	582270108	PUMP PINION -	1	-
9	589028403	OIL PUMP ASSY -	1	-
10	590119703	PUMP PISTON -	1	-
11	590120101	OIL PUMP -	1	-
12	576987401	OIL PRESSURE HOSE	1	-

Ref.	Article N.	Description	Qty	Kit
		-		
13	526818102	SCREW ITXSCM -	2	-
14	588404702	OIL HOSE -	1	-
15	501544102	OIL SCREEN -	1	-
1	594907802	CLUTCH COVER ASSY *Wrap*	1	-
1	599591701	CLUTCH COVER ASSY	1	-
2	537172604	CLUTCH COVER *Wrap*	1	-
2	575236303	CLUTCH COVER	1	-
3	537174101	CHIP GUARD *Wrap*	1	-
3	575236401	CHIP GUARD	1	-
4	526221801	SCREW CITXPANT	3	-
4	525887402	SCREW CITXPANT *Wrap*	4	-
5	501517201	CHAIN GUIDE	1	-
5	537043401	CHAIN GUIDE *Wrap*	1	-
6	537016801	COVER *Wrap*	1	-
6	576424301	COVER	1	-
7	503220001	HEXAGON NUT *Wrap*	2	-
7	505197301	NUT *-up to s/n 224400900*	2	-
9	590104701	CHAIN TENSIONER KIT	1	-
10	590104801	WORM SCREW	1	-
11	590105101	WORM WHEEL	1	-
12	531012901	CHAIN BRAKE *From s/n 224400901-, 2pcs Unlosable nuts and 2pcs Snap rings*	1	-
13	531222801	SNAP RING	1	-
1	590195605	CRANKCASE ASSY	1	-
2	537051301	BAR BOLT	2	-
3	537203001	PIN KNEE-JOINT	1	-
4	530026119	CHECK VALVE	1	-
5	537403501	FILTER	1	-
6	593806001	GUIDE BUSHING	2	-

Ref.	Article N.	Description	Qty	Kit
7	522620003	TANK CAP ASSY	1	-
9	589241101	GASKET	1	-
10	503578901	HOLDER	1	-
11	575616301	CHAIN GUIDE PLATE	1	-
12	526221801	SCREW CITXPANT	1	-
13	575841104	SCREW ITXSCM	6	-
14	537377902	CHAIN CATCHER	1	-
15	525824401	SCREW ITXSCM	2	-
16	595303003	SNAP LOCKING	3	-
17	525798103	SCREW ITXSCFT	2	-
18	534114101	CARBURETTOR AREA BASE	1	-
19	583098401	FIXING WASHER	1	-
20	525755202	SCREW ITXSCFM	4	-
21	581559201	BELLOWS	1	-
22	597909701	DAMPER *Mounting*	2	-
23	589340502	AIR NOZZLE	1	-
24	574353505	SCREW ITXSCM	1	-
29	578864701	GASKET KIT	1	-
32	590261002	SPIKE *Kit - Inner Std*	1	-
33	582179601	SEALING	1	-
34	589349001	SEALING	1	-
35	590261101	GROMMET	1	-
36	582157101	GROMMET	1	-
37	589527701	GROMMET	1	-
38	501515401	SUPPORT	1	-
1	577607401	CRANKSHAFT ASSY -	1	-
2	577572401	NEEDLE BEARING -	1	-
3	587293401	BALL BEARING -	2	-
4	582812601	RADIAL SEAL -	2	-
1	579798701	CYLINDER COVER -	1	-
1	590150305	CYLINDER ASSY *With instruction to download new Firmware*	1	-
2	547282401	PISTON ASSY	1	-

Ref.	Article N.	Description	Qty	Kit
		With instruction to download new Firmware		
3	576627401	PISTON RING *- up to s/n 572XPG; 20242704550, 572XP; 20242705666, Only for 576626706* *Piston assy*	2	-
3	529317601	PISTON RING *From s/n - 572XPG; 20242704551, 572XP; 20242705667, Only for 547282401* *Piston assy*	2	-
4	577572401	NEEDLE BEARING	1	-
5	737431200	SNAP RING	2	-
6	503552201	PLUG	1	-
7	584288701	DECOMPRESSION VALVE	1	-
8	503235111	SPARK PLUG	1	-
9	501811202	SCREW ITXSCM	4	-
10	589527901	SLEEVE	4	-
11	577239801	GASKET	1	-
12	578864701	GASKET KIT	1	-
1	578200701	FUEL TANK ASSY	1	-
2	501152901	TANK VENT ASSY	1	-
3	537208401	THROTTLE LOCKOUT	1	-
4	576162802	THROTTLE CABLE ASSY	1	-
5	544099901	SPRING	1	-
6	576956701	THROTTLE	1	-
7	720182520	PARALLEL PIN	1	-
8	501007601	SUPPORT	1	-
9	575010201	WEAR PROTECTION	1	-
10	523085501	DEFLECTION LIMITER	1	-
11	577062701	ANTIVIBRATION ELEMENT *Hard*	1	-
11	577062702	ANTIVIBRATION ELEMENT	1	-
12	503854103	ANTIVIBRATION ELEMENT *Hard*	1	-
12	503854104	ANTIVIBRATION ELEMENT	1	-
13	529578202	FUEL HOSE ASSY *With magnet*	1	-
14	503443201	FUEL FILTER *18-40 µm (Blue)*	1	-
14	503443205	FUEL FILTER *18-40 µm (Blue) Mega pack (100 pcs)*	1	-
15	522620003	TANK CAP ASSY	1	-
16	589241101	GASKET	1	-

Ref.	Article N.	Description	Qty	Kit
17	503578901	HOLDER	1	-
18	525887402	SCREW CITXPANT	1	-
19	537205601	COVER *H572 XP*	1	-
19	589698901	HANDLE INSERT *H572 XPG*	1	-
20	590567001	DECAL	1	-
1	579484302	FRONT HANDLE ASSY -	1	-
2	504064501	SCREW ITXPANM -	1	-
3	589699101	ANTIVIBRATION ELEMENT -	1	-
3	589699102	ANTIVIBRATION ELEMENT *Hard*	1	-
4	503226601	SQUARE NUT -	1	-
5	525798103	SCREW ITXSCFT -	3	-
6	575885703	SCREW ITXSCFM -	2	-
8	582654201	COVER -	1	-
10	537252501	CONTACT PLATE -	1	-
11	537088301	GROMMET -	1	-
12	590469101	PROTECTION -	1	-
1	579504003	FRONT HANDLE ASSY *Wrap*	1	-
2	579504002	FRONT HANDLE ASSY -	1	-
3	589699101	ANTIVIBRATION ELEMENT -	1	-
3	589699102	ANTIVIBRATION ELEMENT *Hard*	1	-
4	503226601	SQUARE NUT -	1	-
5	525798103	SCREW ITXSCFT -	3	-
6	575885703	SCREW ITXSCFM -	3	-

Ref.	Article N.	Description	Qty	Kit
8	582654201	COVER -	1	-
10	537252501	CONTACT PLATE -	1	-
12	525824902	SCREW ITXSCM -	1	-
13	537331007	CLUTCH COVER ASSY -	1	-
14	503220001	HEXAGON NUT -	1	-
15	589772101	SPIKE *Kit*	1	-
16	525887402	SCREW CITXPANT -	1	-
17	503922701	SPIKE -	1	-
18	537017201	SPIKE -	1	-
19	589771301	CHAIN CATCHER -	1	-
20	537024401	WEAR PROTECTION -	1	-
21	504064501	SCREW ITXPANM -	1	-
22	590469101	PROTECTION -	1	-
23	537088301	GROMMET -	1	-
1	579504001	FRONT HANDLE ASSY -	1	-
2	504064501	SCREW ITXPANM -	1	-
3	575015301	ANTIVIBRATION ELEMENT -	0	-
3	575015303	ANTIVIBRATION ELEMENT *Hard*	1	-
4	503226601	SQUARE NUT -	1	-
5	525798103	SCREW ITXSCFT -	3	-
6	575885703	SCREW ITXSCFM -	3	-
12	525824902	SCREW ITXSCM	2	-

Ref.	Article N.	Description	Qty	Kit
		-		
13	537331007	CLUTCH COVER ASSY -	1	-
14	503220001	HEXAGON NUT -	2	-
15	589772101	SPIKE *Kit*	1	-
16	525887402	SCREW CITXPANT -	1	-
17	503922701	SPIKE -	1	-
18	537017201	SPIKE -	1	-
19	589771301	CHAIN CATCHER -	1	-
20	537024401	WEAR PROTECTION -	1	-
1	579484303	FRONT HANDLE ASSY -	1	-
2	504064501	SCREW ITXPANM -	1	-
3	575015301	ANTIVIBRATION ELEMENT -	1	-
3	575015303	ANTIVIBRATION ELEMENT *Hard*	0	-
4	503226601	SQUARE NUT -	1	-
5	525798103	SCREW ITXSCFT -	3	-
6	575885703	SCREW ITXSCFM -	2	-
1	579484302	FRONT HANDLE ASSY -	1	-
2	504064501	SCREW ITXPANM -	1	-
3	589699101	ANTIVIBRATION ELEMENT -	1	-
3	589699102	ANTIVIBRATION ELEMENT *Hard*	1	-
4	503226601	SQUARE NUT -	1	-
5	525798103	SCREW ITXSCFT -	3	-

Ref.	Article N.	Description	Qty	Kit
6	575885703	SCREW ITXSCFM -	2	-
8	582654201	COVER -	1	-
10	537252501	CONTACT PLATE -	1	-
11	537088301	GROMMET -	1	-
12	590688101	GENERATOR STATOR -	1	-
13	526818102	SCREW ITXSCM -	2	-
14	590688301	THERMOSTAT ASSY -	1	-
16	588168601	FOIL ELEMENT -	1	-
17	575396402	DECAL -	1	-
18	576777202	FLYWHEEL ASSY -	1	-
19	503220401	NUT -	1	-
20	590281301	PAWL *Kit*	1	-
21	589698901	HANDLE INSERT -	1	-
22	526221801	SCREW CITXPANT -	1	-
24	577419006	INLET ELBOW *Heated*	1	-
25	731231401	HEXAGON NUT -	1	-
26	589378401	SEALING -	1	-
27	525619201	SEALING -	1	-
28	525619001	SEALING -	1	-
29	577536402	WIRING ASSY -	1	-
30	510017202	CHOKE CONTROL ASSY -	1	-
31	505156201	SCREW	1	-

Ref.	Article N.	Description	Qty	Kit
		-		
32	590469101	PROTECTION -	1	-
1	576777201	FLYWHEEL ASSY *H572 XP*	1	-
2	590281301	PAWL *Kit*	1	-
3	503220401	NUT -	1	-
4	588193102	IGNITION MODULE ASSY -	1	-
5	590298801	SPARK PLUG CAP -	1	-
6	579451801	WIRE HOLDER -	1	-
7	525824902	SCREW ITXSCM -	2	-
1	587217801	MUFFLER KIT -	1	-
2	585390001	SPARK ARRESTER -	1	-
3	724128759	SCREW CRPANM -	1	-
4	525825106	SCREW ITXSCM -	2	-
5	587351001	HEAT DEFLECTOR -	1	-
6	587350901	GASKET -	1	-
7	578864701	GASKET KIT -	1	-
8	525762503	SCREW ITXSCM -	2	-
1	582752008	CRANKCASE ASSY	1	-
1	575527604	STARTER HOUSING	1	-
2	598750301	SPRING CASSETTE ASSY	1	-
3	525887401	SCREW CITXPANT	2	-
4	531314801	STARTER PULLEY ASSY	1	-
5	576356601	SCREW ITXSCT	1	-
6	505305125	STARTER ROPE	1	-
7	537232501	STARTER HANDLE	1	-
8	525824501	SCREW CITXPANMO	4	-

Ref.	Article N.	Description	Qty	Kit
9	575525802	STARTER HOUSING	1	-
10	537283201	SLEEVE	1	-
11	575396401	DECAL *H572 XP*	1	-
12	575396402	DECAL *H572 XPG*	1	-
13	575525201	BAFFLE	1	-
1	503558513	TOOL -	1	-
2	501691701	COMBINATION WRENCH -	1	-
3	575880701	WRENCH -	1	-
4	583897101	DIAGNOSTIC TOOL KIT -	1	-
5	576183401	CABLE ASSY -	1	-
6	576952201	CABLE ASSY -	1	-
7	575527501	WINTER KIT -	1	-
8	576162601	WINTER COVER -	1	-
9	503217016	SCREW CCRPANT -	2	-
10	740420100	O-RING -	2	-
11	590261001	SPIKE *Outer, std*	1	-
12	575236501	SPIKE -	1	-
13	503222401	LOCK NUT -	2	-
14	525755202	SCREW ITXSCFM -	2	-
15	589772101	SPIKE -	1	-
16	589771301	CHAIN CATCHER -	1	-
17	537024401	WEAR PROTECTION -	1	-
18	537017201	SPIKE -	1	-

Ref.	Article N.	Description	Qty	Kit
19	503922701	SPIKE -	1	-
20	525887402	SCREW CITXPANT -	1	-
21	525824902	SCREW ITXSCM -	2	-
22	503220001	HEXAGON NUT -	2	-

HANDLE

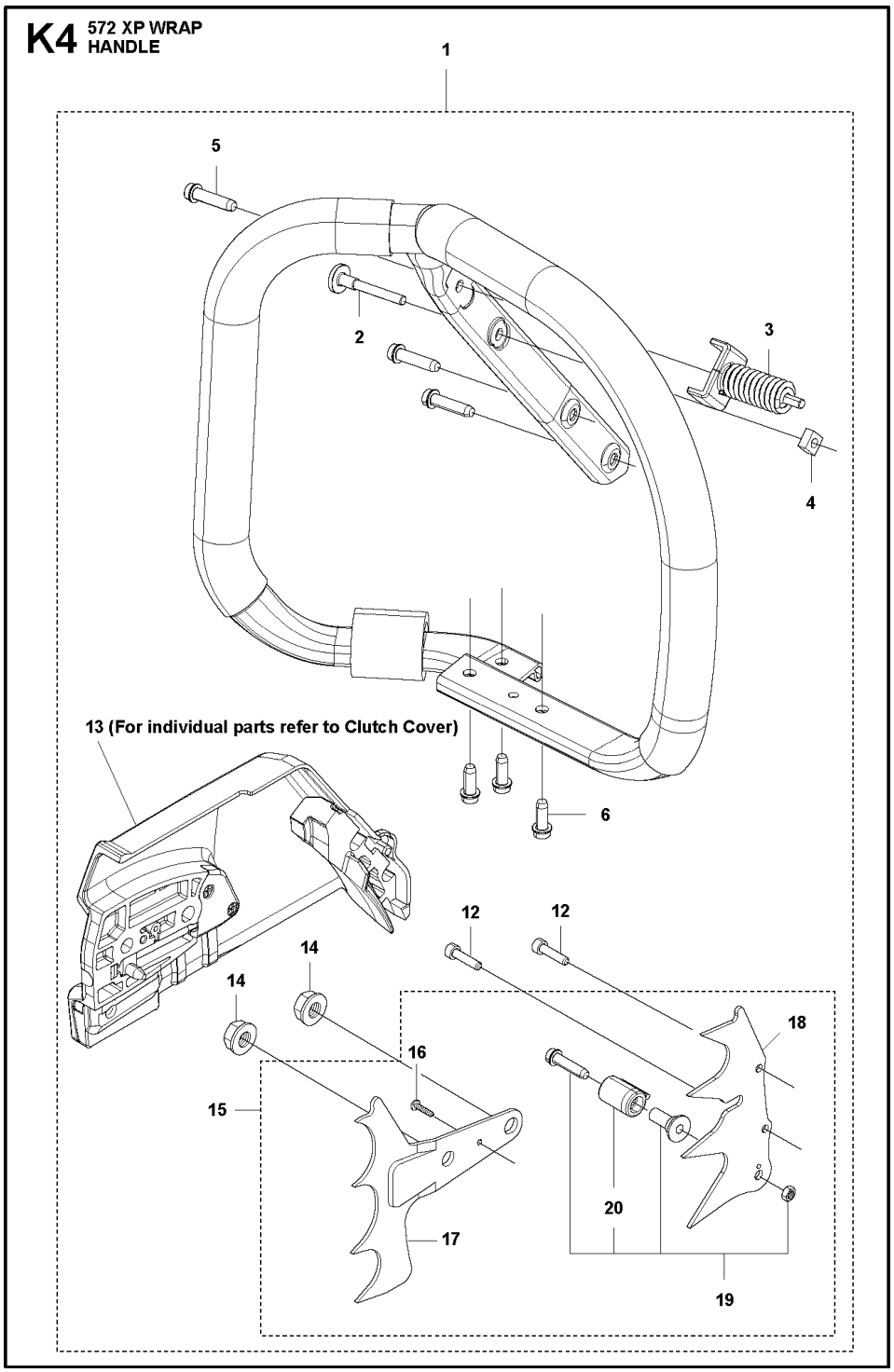

Ref.	Article N.	Description	Qty	Kit
1	596762303	AIR FILTER *Nylon Mesh - 64 Micron Rating - Black*	1	-
1	596762302	AIR FILTER *Nylon Mesh - 25 Micron Rating - Yellow*	1	-
1	596762301	AIR FILTER *Non-Woven - Clear*	1	-

Ref.	Article N.	Description	Qty	Kit
2	577419005	INLET ELBOW *Std*	1	-
2	577419006	INLET ELBOW *Heated*	1	-
3	731231401	HEXAGON NUT	1	-
4	525619201	SEALING	1	-
5	525619001	SEALING	1	-
6	577536402	WIRING ASSY	1	-
7	510017202	CHOKE CONTROL ASSY	1	-
8	505156201	SCREW	1	-
9	589378401	SEALING	1	-
10	523056801	FUEL HOSE	1	-
11	525344303	FUEL HOSE	1	-
12	581143101	SCREW ITXSCFM	2	-
13	525588101	SEALING	1	-
14	505165202	FLANGE	1	-
15	503226503	SQUARE NUT	2	-
16	501182001	BAFFLE	1	-
17	575235301	INLET PIPE *Std*	1	-
17	575235302	INLET PIPE *For extrem cold conditions.*	1	-
18	526818101	SCREW ITXSCM	4	-
19	591158301	CARBURETTOR KIT *C1M-140054E*	1	-
20	582179501	SEALING	1	-
21	590059501	SEALING	1	-
22	537213205	KNOB	1	-
23	589340701	CONTACT CLAMP	1	-
24	589340601	RETAINER	1	-
25	582025101	SUPPORT SLEEVE	1	-
26	503936601	PURGE	1	-
1	591158301	CARBURETTOR KIT *C1M-140054E*	1	-
2	522518901	GASKET KIT *GASKET KIT*	1	-
3	590191501	REPAIR KIT *Metering Kit*	1	-
4	590191601	CARBURETTOR *Throttle Lever Kit*	1	-

Ref.	Article N.	Description	Qty	Kit
6	537383401	SPRING -	1	-
7	522517901	ROD -	1	-
15	522545101	SCREW -	4	-
1	576139602	HAND GUARD -	1	-
2	590105301	SCREW KIT *KIT - Screws and Bushings*	1	-
3	590110201	CHAIN BRAKE -	1	-
4	590105602	KNEE JOINT -	1	-
5	503752202	BRAKE BAND ASSY -	1	-
6	574825601	COVER -	1	-
7	582213301	SCREW -	3	-
1	577603801	CLUTCH DRUM ASSY -	1	-
2	503432001	NEEDLE HOLDER -	1	-
3	501598002	RIM SPROCKET -	1	-
4	503752401	WASHER -	1	-
5	503272101	E-CLIP -	1	-
6	586798404	CLUTCH ASSY -	1	-
7	537360601	CLUTCH SPRING -	3	-
8	582270108	PUMP PINION -	1	-
9	589028403	OIL PUMP ASSY -	1	-
10	590119703	PUMP PISTON -	1	-
11	590120101	OIL PUMP -	1	-
12	576987401	OIL PRESSURE HOSE	1	-

Ref.	Article N.	Description	Qty	Kit
		-		
13	526818102	SCREW ITXSCM -	2	-
14	588404702	OIL HOSE -	1	-
15	501544102	OIL SCREEN -	1	-
1	594907802	CLUTCH COVER ASSY *Wrap*	1	-
1	599591701	CLUTCH COVER ASSY	1	-
2	537172604	CLUTCH COVER *Wrap*	1	-
2	575236303	CLUTCH COVER	1	-
3	537174101	CHIP GUARD *Wrap*	1	-
3	575236401	CHIP GUARD	1	-
4	526221801	SCREW CITXPANT	3	-
4	525887402	SCREW CITXPANT *Wrap*	4	-
5	501517201	CHAIN GUIDE	1	-
5	537043401	CHAIN GUIDE *Wrap*	1	-
6	537016801	COVER *Wrap*	1	-
6	576424301	COVER	1	-
7	503220001	HEXAGON NUT *Wrap*	2	-
7	505197301	NUT *-up to s/n 224400900*	2	-
9	590104701	CHAIN TENSIONER KIT	1	-
10	590104801	WORM SCREW	1	-
11	590105101	WORM WHEEL	1	-
12	531012901	CHAIN BRAKE *From s/n 224400901-, 2pcs Unlosable nuts and 2pcs Snap rings*	1	-
13	531222801	SNAP RING	1	-
1	590195605	CRANKCASE ASSY	1	-
2	537051301	BAR BOLT	2	-
3	537203001	PIN KNEE-JOINT	1	-
4	530026119	CHECK VALVE	1	-
5	537403501	FILTER	1	-
6	593806001	GUIDE BUSHING	2	-

Ref.	Article N.	Description	Qty	Kit
7	522620003	TANK CAP ASSY	1	-
9	589241101	GASKET	1	-
10	503578901	HOLDER	1	-
11	575616301	CHAIN GUIDE PLATE	1	-
12	526221801	SCREW CITXPANT	1	-
13	575841104	SCREW ITXSCM	6	-
14	537377902	CHAIN CATCHER	1	-
15	525824401	SCREW ITXSCM	2	-
16	595303003	SNAP LOCKING	3	-
17	525798103	SCREW ITXSCFT	2	-
18	534114101	CARBURETTOR AREA BASE	1	-
19	583098401	FIXING WASHER	1	-
20	525755202	SCREW ITXSCFM	4	-
21	581559201	BELLOWS	1	-
22	597909701	DAMPER *Mounting*	2	-
23	589340502	AIR NOZZLE	1	-
24	574353505	SCREW ITXSCM	1	-
29	578864701	GASKET KIT	1	-
32	590261002	SPIKE *Kit - Inner Std*	1	-
33	582179601	SEALING	1	-
34	589349001	SEALING	1	-
35	590261101	GROMMET	1	-
36	582157101	GROMMET	1	-
37	589527701	GROMMET	1	-
38	501515401	SUPPORT	1	-
1	577607401	CRANKSHAFT ASSY -	1	-
2	577572401	NEEDLE BEARING -	1	-
3	587293401	BALL BEARING -	2	-
4	582812601	RADIAL SEAL -	2	-
1	579798701	CYLINDER COVER -	1	-
1	590150305	CYLINDER ASSY *With instruction to download new Firmware*	1	-
2	547282401	PISTON ASSY	1	-

Ref.	Article N.	Description	Qty	Kit
		With instruction to download new Firmware		
3	576627401	PISTON RING *- up to s/n 572XPG; 20242704550, 572XP; 20242705666, Only for 576626706* *Piston assy*	2	-
3	529317601	PISTON RING *From s/n - 572XPG; 20242704551, 572XP; 20242705667, Only for 547282401* *Piston assy*	2	-
4	577572401	NEEDLE BEARING	1	-
5	737431200	SNAP RING	2	-
6	503552201	PLUG	1	-
7	584288701	DECOMPRESSION VALVE	1	-
8	503235111	SPARK PLUG	1	-
9	501811202	SCREW ITXSCM	4	-
10	589527901	SLEEVE	4	-
11	577239801	GASKET	1	-
12	578864701	GASKET KIT	1	-
1	578200701	FUEL TANK ASSY	1	-
2	501152901	TANK VENT ASSY	1	-
3	537208401	THROTTLE LOCKOUT	1	-
4	576162802	THROTTLE CABLE ASSY	1	-
5	544099901	SPRING	1	-
6	576956701	THROTTLE	1	-
7	720182520	PARALLEL PIN	1	-
8	501007601	SUPPORT	1	-
9	575010201	WEAR PROTECTION	1	-
10	523085501	DEFLECTION LIMITER	1	-
11	577062701	ANTIVIBRATION ELEMENT *Hard*	1	-
11	577062702	ANTIVIBRATION ELEMENT	1	-
12	503854103	ANTIVIBRATION ELEMENT *Hard*	1	-
12	503854104	ANTIVIBRATION ELEMENT	1	-
13	529578202	FUEL HOSE ASSY *With magnet*	1	-
14	503443201	FUEL FILTER *18-40 µm (Blue)*	1	-
14	503443205	FUEL FILTER *18-40 µm (Blue) Mega pack (100 pcs)*	1	-
15	522620003	TANK CAP ASSY	1	-
16	589241101	GASKET	1	-

Ref.	Article N.	Description	Qty	Kit
17	503578901	HOLDER	1	-
18	525887402	SCREW CITXPANT	1	-
19	537205601	COVER *H572 XP*	1	-
19	589698901	HANDLE INSERT *H572 XPG*	1	-
20	590567001	DECAL	1	-
1	579484302	FRONT HANDLE ASSY -	1	-
2	504064501	SCREW ITXPANM -	1	-
3	589699101	ANTIVIBRATION ELEMENT -	1	-
3	589699102	ANTIVIBRATION ELEMENT *Hard*	1	-
4	503226601	SQUARE NUT -	1	-
5	525798103	SCREW ITXSCFT -	3	-
6	575885703	SCREW ITXSCFM -	2	-
8	582654201	COVER -	1	-
10	537252501	CONTACT PLATE -	1	-
11	537088301	GROMMET -	1	-
12	590469101	PROTECTION -	1	-
1	579504003	FRONT HANDLE ASSY *Wrap*	1	-
2	579504002	FRONT HANDLE ASSY -	1	-
3	589699101	ANTIVIBRATION ELEMENT -	1	-
3	589699102	ANTIVIBRATION ELEMENT *Hard*	1	-
4	503226601	SQUARE NUT -	1	-
5	525798103	SCREW ITXSCFT -	3	-
6	575885703	SCREW ITXSCFM -	3	-

Ref.	Article N.	Description	Qty	Kit
8	582654201	COVER -	1	-
10	537252501	CONTACT PLATE -	1	-
12	525824902	SCREW ITXSCM -	1	-
13	537331007	CLUTCH COVER ASSY -	1	-
14	503220001	HEXAGON NUT -	1	-
15	589772101	SPIKE *Kit*	1	-
16	525887402	SCREW CITXPANT -	1	-
17	503922701	SPIKE -	1	-
18	537017201	SPIKE -	1	-
19	589771301	CHAIN CATCHER -	1	-
20	537024401	WEAR PROTECTION -	1	-
21	504064501	SCREW ITXPANM -	1	-
22	590469101	PROTECTION -	1	-
23	537088301	GROMMET -	1	-
1	579504001	FRONT HANDLE ASSY -	1	-
2	504064501	SCREW ITXPANM -	1	-
3	575015301	ANTIVIBRATION ELEMENT -	0	-
3	575015303	ANTIVIBRATION ELEMENT *Hard*	1	-
4	503226601	SQUARE NUT -	1	-
5	525798103	SCREW ITXSCFT -	3	-
6	575885703	SCREW ITXSCFM -	3	-
12	525824902	SCREW ITXSCM	2	-

Ref.	Article N.	Description	Qty	Kit
		-		
13	537331007	CLUTCH COVER ASSY -	1	-
14	503220001	HEXAGON NUT -	2	-
15	589772101	SPIKE *Kit*	1	-
16	525887402	SCREW CITXPANT -	1	-
17	503922701	SPIKE -	1	-
18	537017201	SPIKE -	1	-
19	589771301	CHAIN CATCHER -	1	-
20	537024401	WEAR PROTECTION -	1	-
1	579484303	FRONT HANDLE ASSY -	1	-
2	504064501	SCREW ITXPANM -	1	-
3	575015301	ANTIVIBRATION ELEMENT -	1	-
3	575015303	ANTIVIBRATION ELEMENT *Hard*	0	-
4	503226601	SQUARE NUT -	1	-
5	525798103	SCREW ITXSCFT -	3	-
6	575885703	SCREW ITXSCFM -	2	-
1	579484302	FRONT HANDLE ASSY -	1	-
2	504064501	SCREW ITXPANM -	1	-
3	589699101	ANTIVIBRATION ELEMENT -	1	-
3	589699102	ANTIVIBRATION ELEMENT *Hard*	1	-
4	503226601	SQUARE NUT -	1	-
5	525798103	SCREW ITXSCFT -	3	-

Ref.	Article N.	Description	Qty	Kit
6	575885703	SCREW ITXSCFM -	2	-
8	582654201	COVER -	1	-
10	537252501	CONTACT PLATE -	1	-
11	537088301	GROMMET -	1	-
12	590688101	GENERATOR STATOR -	1	-
13	526818102	SCREW ITXSCM -	2	-
14	590688301	THERMOSTAT ASSY -	1	-
16	588168601	FOIL ELEMENT -	1	-
17	575396402	DECAL -	1	-
18	576777202	FLYWHEEL ASSY -	1	-
19	503220401	NUT -	1	-
20	590281301	PAWL *Kit*	1	-
21	589698901	HANDLE INSERT -	1	-
22	526221801	SCREW CITXPANT -	1	-
24	577419006	INLET ELBOW *Heated*	1	-
25	731231401	HEXAGON NUT -	1	-
26	589378401	SEALING -	1	-
27	525619201	SEALING -	1	-
28	525619001	SEALING -	1	-
29	577536402	WIRING ASSY -	1	-
30	510017202	CHOKE CONTROL ASSY -	1	-
31	505156201	SCREW	1	-

Ref.	Article N.	Description	Qty	Kit
		-		
32	590469101	PROTECTION -	1	-
1	576777201	FLYWHEEL ASSY *H572 XP*	1	-
2	590281301	PAWL *Kit*	1	-
3	503220401	NUT -	1	-
4	588193102	IGNITION MODULE ASSY -	1	-
5	590298801	SPARK PLUG CAP -	1	-
6	579451801	WIRE HOLDER -	1	-
7	525824902	SCREW ITXSCM -	2	-
1	587217801	MUFFLER KIT -	1	-
2	585390001	SPARK ARRESTER -	1	-
3	724128759	SCREW CRPANM -	1	-
4	525825106	SCREW ITXSCM -	2	-
5	587351001	HEAT DEFLECTOR -	1	-
6	587350901	GASKET -	1	-
7	578864701	GASKET KIT -	1	-
8	525762503	SCREW ITXSCM -	2	-
1	582752008	CRANKCASE ASSY	1	-
1	575527604	STARTER HOUSING	1	-
2	598750301	SPRING CASSETTE ASSY	1	-
3	525887401	SCREW CITXPANT	2	-
4	531314801	STARTER PULLEY ASSY	1	-
5	576356601	SCREW ITXSCT	1	-
6	505305125	STARTER ROPE	1	-
7	537232501	STARTER HANDLE	1	-
8	525824501	SCREW CITXPANMO	4	-

Ref.	Article N.	Description	Qty	Kit
9	575525802	STARTER HOUSING	1	-
10	537283201	SLEEVE	1	-
11	575396401	DECAL *H572 XP*	1	-
12	575396402	DECAL *H572 XPG*	1	-
13	575525201	BAFFLE	1	-
1	503558513	TOOL -	1	-
2	501691701	COMBINATION WRENCH -	1	-
3	575880701	WRENCH -	1	-
4	583897101	DIAGNOSTIC TOOL KIT -	1	-
5	576183401	CABLE ASSY -	1	-
6	576952201	CABLE ASSY -	1	-
7	575527501	WINTER KIT -	1	-
8	576162601	WINTER COVER -	1	-
9	503217016	SCREW CCRPANT -	2	-
10	740420100	O-RING -	2	-
11	590261001	SPIKE *Outer, std*	1	-
12	575236501	SPIKE -	1	-
13	503222401	LOCK NUT -	2	-
14	525755202	SCREW ITXSCFM -	2	-
15	589772101	SPIKE -	1	-
16	589771301	CHAIN CATCHER -	1	-
17	537024401	WEAR PROTECTION -	1	-
18	537017201	SPIKE -	1	-

Ref.	Article N.	Description	Qty	Kit
19	503922701	SPIKE -	1	-
20	525887402	SCREW CITXPANT -	1	-
21	525824902	SCREW ITXSCM -	2	-
22	503220001	HEXAGON NUT -	2	-

HANDLE

K1 572 XP
HANDLE

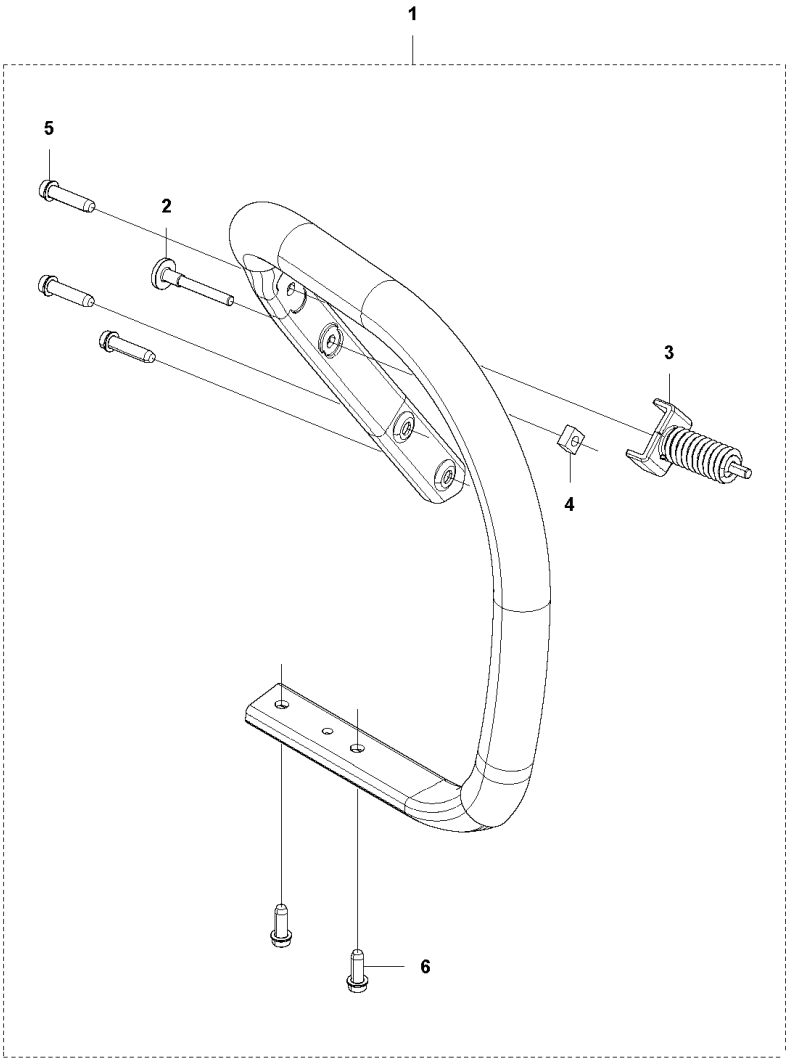

Ref.	Article N.	Description	Qty	Kit
1	596762303	AIR FILTER *Nylon Mesh - 64 Micron Rating - Black*	1	-
1	596762302	AIR FILTER *Nylon Mesh - 25 Micron Rating - Yellow*	1	-
1	596762301	AIR FILTER *Non-Woven - Clear*	1	-

Ref.	Article N.	Description	Qty	Kit
2	577419005	INLET ELBOW *Std*	1	-
2	577419006	INLET ELBOW *Heated*	1	-
3	731231401	HEXAGON NUT	1	-
4	525619201	SEALING	1	-
5	525619001	SEALING	1	-
6	577536402	WIRING ASSY	1	-
7	510017202	CHOKE CONTROL ASSY	1	-
8	505156201	SCREW	1	-
9	589378401	SEALING	1	-
10	523056801	FUEL HOSE	1	-
11	525344303	FUEL HOSE	1	-
12	581143101	SCREW ITXSCFM	2	-
13	525588101	SEALING	1	-
14	505165202	FLANGE	1	-
15	503226503	SQUARE NUT	2	-
16	501182001	BAFFLE	1	-
17	575235301	INLET PIPE *Std*	1	-
17	575235302	INLET PIPE *For extrem cold conditions.*	1	-
18	526818101	SCREW ITXSCM	4	-
19	591158301	CARBURETTOR KIT *C1M-140054E*	1	-
20	582179501	SEALING	1	-
21	590059501	SEALING	1	-
22	537213205	KNOB	1	-
23	589340701	CONTACT CLAMP	1	-
24	589340601	RETAINER	1	-
25	582025101	SUPPORT SLEEVE	1	-
26	503936601	PURGE	1	-
1	591158301	CARBURETTOR KIT *C1M-140054E*	1	-
2	522518901	GASKET KIT *GASKET KIT*	1	-
3	590191501	REPAIR KIT *Metering Kit*	1	-
4	590191601	CARBURETTOR *Throttle Lever Kit*	1	-

Ref.	Article N.	Description	Qty	Kit
6	537383401	SPRING -	1	-
7	522517901	ROD -	1	-
15	522545101	SCREW -	4	-
1	576139602	HAND GUARD -	1	-
2	590105301	SCREW KIT *KIT - Screws and Bushings*	1	-
3	590110201	CHAIN BRAKE -	1	-
4	590105602	KNEE JOINT -	1	-
5	503752202	BRAKE BAND ASSY -	1	-
6	574825601	COVER -	1	-
7	582213301	SCREW -	3	-
1	577603801	CLUTCH DRUM ASSY -	1	-
2	503432001	NEEDLE HOLDER -	1	-
3	501598002	RIM SPROCKET -	1	-
4	503752401	WASHER -	1	-
5	503272101	E-CLIP -	1	-
6	586798404	CLUTCH ASSY -	1	-
7	537360601	CLUTCH SPRING -	3	-
8	582270108	PUMP PINION -	1	-
9	589028403	OIL PUMP ASSY -	1	-
10	590119703	PUMP PISTON -	1	-
11	590120101	OIL PUMP -	1	-
12	576987401	OIL PRESSURE HOSE	1	-

Ref.	Article N.	Description	Qty	Kit
		-		
13	526818102	SCREW ITXSCM -	2	-
14	588404702	OIL HOSE -	1	-
15	501544102	OIL SCREEN -	1	-
1	594907802	CLUTCH COVER ASSY *Wrap*	1	-
1	599591701	CLUTCH COVER ASSY	1	-
2	537172604	CLUTCH COVER *Wrap*	1	-
2	575236303	CLUTCH COVER	1	-
3	537174101	CHIP GUARD *Wrap*	1	-
3	575236401	CHIP GUARD	1	-
4	526221801	SCREW CITXPANT	3	-
4	525887402	SCREW CITXPANT *Wrap*	4	-
5	501517201	CHAIN GUIDE	1	-
5	537043401	CHAIN GUIDE *Wrap*	1	-
6	537016801	COVER *Wrap*	1	-
6	576424301	COVER	1	-
7	503220001	HEXAGON NUT *Wrap*	2	-
7	505197301	NUT *-up to s/n 224400900*	2	-
9	590104701	CHAIN TENSIONER KIT	1	-
10	590104801	WORM SCREW	1	-
11	590105101	WORM WHEEL	1	-
12	531012901	CHAIN BRAKE *From s/n 224400901-, 2pcs Unlosable nuts and 2pcs Snap rings*	1	-
13	531222801	SNAP RING	1	-
1	590195605	CRANKCASE ASSY	1	-
2	537051301	BAR BOLT	2	-
3	537203001	PIN KNEE-JOINT	1	-
4	530026119	CHECK VALVE	1	-
5	537403501	FILTER	1	-
6	593806001	GUIDE BUSHING	2	-

Ref.	Article N.	Description	Qty	Kit
7	522620003	TANK CAP ASSY	1	-
9	589241101	GASKET	1	-
10	503578901	HOLDER	1	-
11	575616301	CHAIN GUIDE PLATE	1	-
12	526221801	SCREW CITXPANT	1	-
13	575841104	SCREW ITXSCM	6	-
14	537377902	CHAIN CATCHER	1	-
15	525824401	SCREW ITXSCM	2	-
16	595303003	SNAP LOCKING	3	-
17	525798103	SCREW ITXSCFT	2	-
18	534114101	CARBURETTOR AREA BASE	1	-
19	583098401	FIXING WASHER	1	-
20	525755202	SCREW ITXSCFM	4	-
21	581559201	BELLOWS	1	-
22	597909701	DAMPER *Mounting*	2	-
23	589340502	AIR NOZZLE	1	-
24	574353505	SCREW ITXSCM	1	-
29	578864701	GASKET KIT	1	-
32	590261002	SPIKE *Kit - Inner Std*	1	-
33	582179601	SEALING	1	-
34	589349001	SEALING	1	-
35	590261101	GROMMET	1	-
36	582157101	GROMMET	1	-
37	589527701	GROMMET	1	-
38	501515401	SUPPORT	1	-
1	577607401	CRANKSHAFT ASSY -	1	-
2	577572401	NEEDLE BEARING -	1	-
3	587293401	BALL BEARING -	2	-
4	582812601	RADIAL SEAL -	2	-
1	579798701	CYLINDER COVER -	1	-
1	590150305	CYLINDER ASSY *With instruction to download new Firmware*	1	-
2	547282401	PISTON ASSY	1	-

Ref.	Article N.	Description	Qty	Kit
		With instruction to download new Firmware		
3	576627401	PISTON RING *- up to s/n 572XPG; 20242704550, 572XP; 20242705666, Only for 576626706* *Piston assy*	2	-
3	529317601	PISTON RING *From s/n - 572XPG; 20242704551, 572XP; 20242705667, Only for 547282401* *Piston assy*	2	-
4	577572401	NEEDLE BEARING	1	-
5	737431200	SNAP RING	2	-
6	503552201	PLUG	1	-
7	584288701	DECOMPRESSION VALVE	1	-
8	503235111	SPARK PLUG	1	-
9	501811202	SCREW ITXSCM	4	-
10	589527901	SLEEVE	4	-
11	577239801	GASKET	1	-
12	578864701	GASKET KIT	1	-
1	578200701	FUEL TANK ASSY	1	-
2	501152901	TANK VENT ASSY	1	-
3	537208401	THROTTLE LOCKOUT	1	-
4	576162802	THROTTLE CABLE ASSY	1	-
5	544099901	SPRING	1	-
6	576956701	THROTTLE	1	-
7	720182520	PARALLEL PIN	1	-
8	501007601	SUPPORT	1	-
9	575010201	WEAR PROTECTION	1	-
10	523085501	DEFLECTION LIMITER	1	-
11	577062701	ANTIVIBRATION ELEMENT *Hard*	1	-
11	577062702	ANTIVIBRATION ELEMENT	1	-
12	503854103	ANTIVIBRATION ELEMENT *Hard*	1	-
12	503854104	ANTIVIBRATION ELEMENT	1	-
13	529578202	FUEL HOSE ASSY *With magnet*	1	-
14	503443201	FUEL FILTER *18-40 µm (Blue)*	1	-
14	503443205	FUEL FILTER *18-40 µm (Blue) Mega pack (100 pcs)*	1	-
15	522620003	TANK CAP ASSY	1	-
16	589241101	GASKET	1	-

Ref.	Article N.	Description	Qty	Kit
17	503578901	HOLDER	1	-
18	525887402	SCREW CITXPANT	1	-
19	537205601	COVER *H572 XP*	1	-
19	589698901	HANDLE INSERT *H572 XPG*	1	-
20	590567001	DECAL	1	-
1	579484302	FRONT HANDLE ASSY -	1	-
2	504064501	SCREW ITXPANM -	1	-
3	589699101	ANTIVIBRATION ELEMENT -	1	-
3	589699102	ANTIVIBRATION ELEMENT *Hard*	1	-
4	503226601	SQUARE NUT -	1	-
5	525798103	SCREW ITXSCFT -	3	-
6	575885703	SCREW ITXSCFM -	2	-
8	582654201	COVER -	1	-
10	537252501	CONTACT PLATE -	1	-
11	537088301	GROMMET -	1	-
12	590469101	PROTECTION -	1	-
1	579504003	FRONT HANDLE ASSY *Wrap*	1	-
2	579504002	FRONT HANDLE ASSY -	1	-
3	589699101	ANTIVIBRATION ELEMENT -	1	-
3	589699102	ANTIVIBRATION ELEMENT *Hard*	1	-
4	503226601	SQUARE NUT -	1	-
5	525798103	SCREW ITXSCFT -	3	-
6	575885703	SCREW ITXSCFM -	3	-

Ref.	Article N.	Description	Qty	Kit
8	582654201	COVER -	1	-
10	537252501	CONTACT PLATE -	1	-
12	525824902	SCREW ITXSCM -	1	-
13	537331007	CLUTCH COVER ASSY -	1	-
14	503220001	HEXAGON NUT -	1	-
15	589772101	SPIKE *Kit*	1	-
16	525887402	SCREW CITXPANT -	1	-
17	503922701	SPIKE -	1	-
18	537017201	SPIKE -	1	-
19	589771301	CHAIN CATCHER -	1	-
20	537024401	WEAR PROTECTION -	1	-
21	504064501	SCREW ITXPANM -	1	-
22	590469101	PROTECTION -	1	-
23	537088301	GROMMET -	1	-
1	579504001	FRONT HANDLE ASSY -	1	-
2	504064501	SCREW ITXPANM -	1	-
3	575015301	ANTIVIBRATION ELEMENT -	0	-
3	575015303	ANTIVIBRATION ELEMENT *Hard*	1	-
4	503226601	SQUARE NUT -	1	-
5	525798103	SCREW ITXSCFT -	3	-
6	575885703	SCREW ITXSCFM -	3	-
12	525824902	SCREW ITXSCM	2	-

Ref.	Article N.	Description	Qty	Kit
		-		
13	537331007	CLUTCH COVER ASSY -	1	-
14	503220001	HEXAGON NUT -	2	-
15	589772101	SPIKE *Kit*	1	-
16	525887402	SCREW CITXPANT -	1	-
17	503922701	SPIKE -	1	-
18	537017201	SPIKE -	1	-
19	589771301	CHAIN CATCHER -	1	-
20	537024401	WEAR PROTECTION -	1	-
1	579484303	FRONT HANDLE ASSY -	1	-
2	504064501	SCREW ITXPANM -	1	-
3	575015301	ANTIVIBRATION ELEMENT -	1	-
3	575015303	ANTIVIBRATION ELEMENT *Hard*	0	-
4	503226601	SQUARE NUT -	1	-
5	525798103	SCREW ITXSCFT -	3	-
6	575885703	SCREW ITXSCFM -	2	-
1	579484302	FRONT HANDLE ASSY -	1	-
2	504064501	SCREW ITXPANM -	1	-
3	589699101	ANTIVIBRATION ELEMENT -	1	-
3	589699102	ANTIVIBRATION ELEMENT *Hard*	1	-
4	503226601	SQUARE NUT -	1	-
5	525798103	SCREW ITXSCFT -	3	-

Ref.	Article N.	Description	Qty	Kit
6	575885703	SCREW ITXSCFM -	2	-
8	582654201	COVER -	1	-
10	537252501	CONTACT PLATE -	1	-
11	537088301	GROMMET -	1	-
12	590688101	GENERATOR STATOR -	1	-
13	526818102	SCREW ITXSCM -	2	-
14	590688301	THERMOSTAT ASSY -	1	-
16	588168601	FOIL ELEMENT -	1	-
17	575396402	DECAL -	1	-
18	576777202	FLYWHEEL ASSY -	1	-
19	503220401	NUT -	1	-
20	590281301	PAWL *Kit*	1	-
21	589698901	HANDLE INSERT -	1	-
22	526221801	SCREW CITXPANT -	1	-
24	577419006	INLET ELBOW *Heated*	1	-
25	731231401	HEXAGON NUT -	1	-
26	589378401	SEALING -	1	-
27	525619201	SEALING -	1	-
28	525619001	SEALING -	1	-
29	577536402	WIRING ASSY -	1	-
30	510017202	CHOKE CONTROL ASSY -	1	-
31	505156201	SCREW	1	-

Ref.	Article N.	Description	Qty	Kit
		-		
32	590469101	PROTECTION -	1	-
1	576777201	FLYWHEEL ASSY *H572 XP*	1	-
2	590281301	PAWL *Kit*	1	-
3	503220401	NUT -	1	-
4	588193102	IGNITION MODULE ASSY -	1	-
5	590298801	SPARK PLUG CAP -	1	-
6	579451801	WIRE HOLDER -	1	-
7	525824902	SCREW ITXSCM -	2	-
1	587217801	MUFFLER KIT -	1	-
2	585390001	SPARK ARRESTER -	1	-
3	724128759	SCREW CRPANM -	1	-
4	525825106	SCREW ITXSCM -	2	-
5	587351001	HEAT DEFLECTOR -	1	-
6	587350901	GASKET -	1	-
7	578864701	GASKET KIT -	1	-
8	525762503	SCREW ITXSCM -	2	-
1	582752008	CRANKCASE ASSY	1	-
1	575527604	STARTER HOUSING	1	-
2	598750301	SPRING CASSETTE ASSY	1	-
3	525887401	SCREW CITXPANT	2	-
4	531314801	STARTER PULLEY ASSY	1	-
5	576356601	SCREW ITXSCT	1	-
6	505305125	STARTER ROPE	1	-
7	537232501	STARTER HANDLE	1	-
8	525824501	SCREW CITXPANMO	4	-

Ref.	Article N.	Description	Qty	Kit
9	575525802	STARTER HOUSING	1	-
10	537283201	SLEEVE	1	-
11	575396401	DECAL *H572 XP*	1	-
12	575396402	DECAL *H572 XPG*	1	-
13	575525201	BAFFLE	1	-
1	503558513	TOOL -	1	-
2	501691701	COMBINATION WRENCH -	1	-
3	575880701	WRENCH -	1	-
4	583897101	DIAGNOSTIC TOOL KIT -	1	-
5	576183401	CABLE ASSY -	1	-
6	576952201	CABLE ASSY -	1	-
7	575527501	WINTER KIT -	1	-
8	576162601	WINTER COVER -	1	-
9	503217016	SCREW CCRPANT -	2	-
10	740420100	O-RING -	2	-
11	590261001	SPIKE *Outer, std*	1	-
12	575236501	SPIKE -	1	-
13	503222401	LOCK NUT -	2	-
14	525755202	SCREW ITXSCFM -	2	-
15	589772101	SPIKE -	1	-
16	589771301	CHAIN CATCHER -	1	-
17	537024401	WEAR PROTECTION -	1	-
18	537017201	SPIKE -	1	-

Ref.	Article N.	Description	Qty	Kit
19	503922701	SPIKE -	1	-
20	525887402	SCREW CITXPANT -	1	-
21	525824902	SCREW ITXSCM -	2	-
22	503220001	HEXAGON NUT -	2	-

HEATED HANDLES

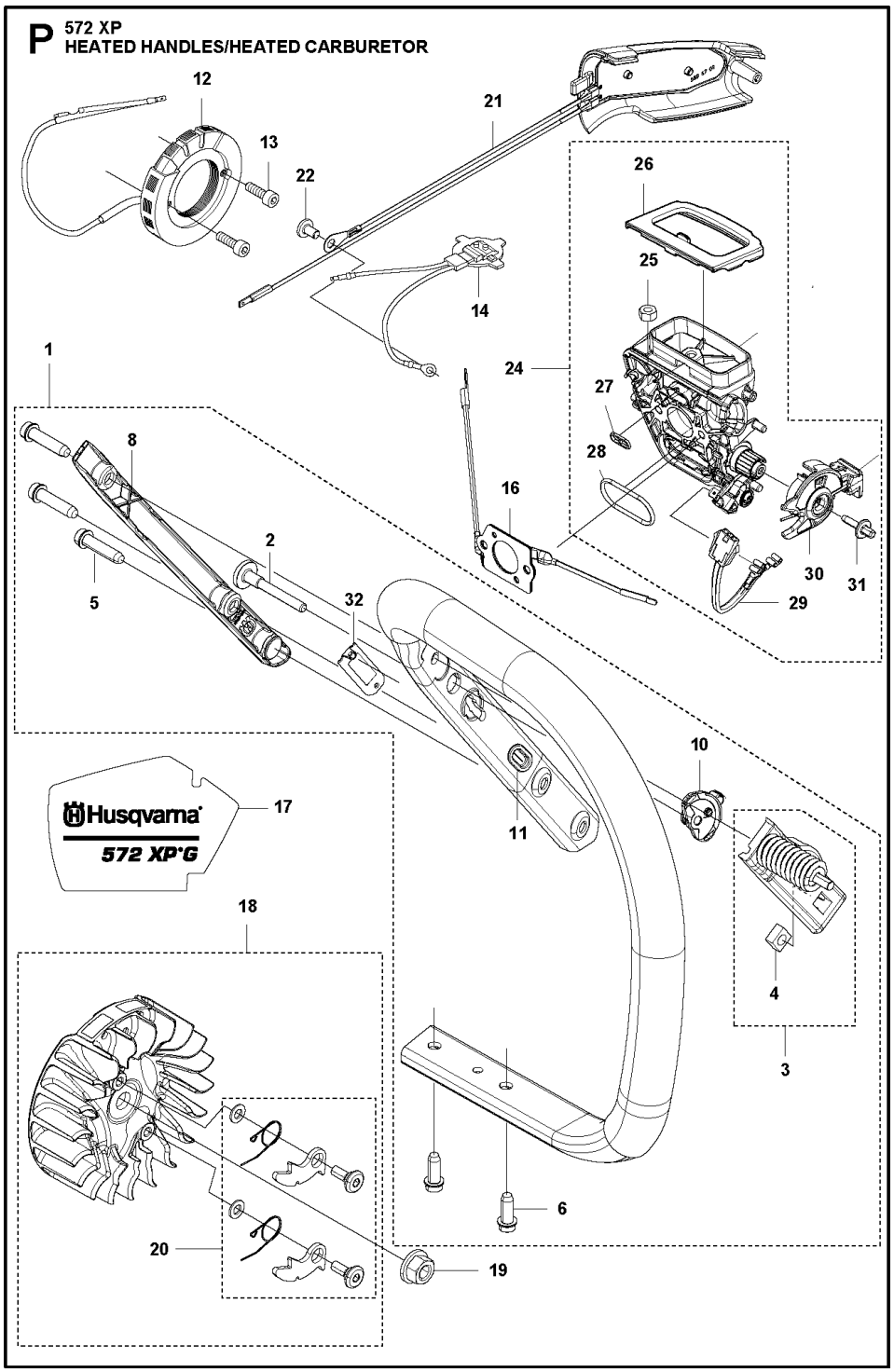

Ref.	Article N.	Description	Qty	Kit
1	596762303	AIR FILTER *Nylon Mesh - 64 Micron Rating - Black*	1	-
1	596762302	AIR FILTER *Nylon Mesh - 25 Micron Rating - Yellow*	1	-
1	596762301	AIR FILTER *Non-Woven - Clear*	1	-

Ref.	Article N.	Description	Qty	Kit
2	577419005	INLET ELBOW *Std*	1	-
2	577419006	INLET ELBOW *Heated*	1	-
3	731231401	HEXAGON NUT	1	-
4	525619201	SEALING	1	-
5	525619001	SEALING	1	-
6	577536402	WIRING ASSY	1	-
7	510017202	CHOKE CONTROL ASSY	1	-
8	505156201	SCREW	1	-
9	589378401	SEALING	1	-
10	523056801	FUEL HOSE	1	-
11	525344303	FUEL HOSE	1	-
12	581143101	SCREW ITXSCFM	2	-
13	525588101	SEALING	1	-
14	505165202	FLANGE	1	-
15	503226503	SQUARE NUT	2	-
16	501182001	BAFFLE	1	-
17	575235301	INLET PIPE *Std*	1	-
17	575235302	INLET PIPE *For extrem cold conditions.*	1	-
18	526818101	SCREW ITXSCM	4	-
19	591158301	CARBURETTOR KIT *C1M-140054E*	1	-
20	582179501	SEALING	1	-
21	590059501	SEALING	1	-
22	537213205	KNOB	1	-
23	589340701	CONTACT CLAMP	1	-
24	589340601	RETAINER	1	-
25	582025101	SUPPORT SLEEVE	1	-
26	503936601	PURGE	1	-
1	591158301	CARBURETTOR KIT *C1M-140054E*	1	-
2	522518901	GASKET KIT *GASKET KIT*	1	-
3	590191501	REPAIR KIT *Metering Kit*	1	-
4	590191601	CARBURETTOR *Throttle Lever Kit*	1	-

Ref.	Article N.	Description	Qty	Kit
6	537383401	SPRING -	1	-
7	522517901	ROD -	1	-
15	522545101	SCREW -	4	-
1	576139602	HAND GUARD -	1	-
2	590105301	SCREW KIT *KIT - Screws and Bushings*	1	-
3	590110201	CHAIN BRAKE -	1	-
4	590105602	KNEE JOINT -	1	-
5	503752202	BRAKE BAND ASSY -	1	-
6	574825601	COVER -	1	-
7	582213301	SCREW -	3	-
1	577603801	CLUTCH DRUM ASSY -	1	-
2	503432001	NEEDLE HOLDER -	1	-
3	501598002	RIM SPROCKET -	1	-
4	503752401	WASHER -	1	-
5	503272101	E-CLIP -	1	-
6	586798404	CLUTCH ASSY -	1	-
7	537360601	CLUTCH SPRING -	3	-
8	582270108	PUMP PINION -	1	-
9	589028403	OIL PUMP ASSY -	1	-
10	590119703	PUMP PISTON -	1	-
11	590120101	OIL PUMP -	1	-
12	576987401	OIL PRESSURE HOSE	1	-

Ref.	Article N.	Description	Qty	Kit
		-		
13	526818102	SCREW ITXSCM -	2	-
14	588404702	OIL HOSE -	1	-
15	501544102	OIL SCREEN -	1	-
1	594907802	CLUTCH COVER ASSY *Wrap*	1	-
1	599591701	CLUTCH COVER ASSY	1	-
2	537172604	CLUTCH COVER *Wrap*	1	-
2	575236303	CLUTCH COVER	1	-
3	537174101	CHIP GUARD *Wrap*	1	-
3	575236401	CHIP GUARD	1	-
4	526221801	SCREW CITXPANT	3	-
4	525887402	SCREW CITXPANT *Wrap*	4	-
5	501517201	CHAIN GUIDE	1	-
5	537043401	CHAIN GUIDE *Wrap*	1	-
6	537016801	COVER *Wrap*	1	-
6	576424301	COVER	1	-
7	503220001	HEXAGON NUT *Wrap*	2	-
7	505197301	NUT *-up to s/n 224400900*	2	-
9	590104701	CHAIN TENSIONER KIT	1	-
10	590104801	WORM SCREW	1	-
11	590105101	WORM WHEEL	1	-
12	531012901	CHAIN BRAKE *From s/n 224400901-, 2pcs Unlosable nuts and 2pcs Snap rings*	1	-
13	531222801	SNAP RING	1	-
1	590195605	CRANKCASE ASSY	1	-
2	537051301	BAR BOLT	2	-
3	537203001	PIN KNEE-JOINT	1	-
4	530026119	CHECK VALVE	1	-
5	537403501	FILTER	1	-
6	593806001	GUIDE BUSHING	2	-

Ref.	Article N.	Description	Qty	Kit
7	522620003	TANK CAP ASSY	1	-
9	589241101	GASKET	1	-
10	503578901	HOLDER	1	-
11	575616301	CHAIN GUIDE PLATE	1	-
12	526221801	SCREW CITXPANT	1	-
13	575841104	SCREW ITXSCM	6	-
14	537377902	CHAIN CATCHER	1	-
15	525824401	SCREW ITXSCM	2	-
16	595303003	SNAP LOCKING	3	-
17	525798103	SCREW ITXSCFT	2	-
18	534114101	CARBURETTOR AREA BASE	1	-
19	583098401	FIXING WASHER	1	-
20	525755202	SCREW ITXSCFM	4	-
21	581559201	BELLOWS	1	-
22	597909701	DAMPER *Mounting*	2	-
23	589340502	AIR NOZZLE	1	-
24	574353505	SCREW ITXSCM	1	-
29	578864701	GASKET KIT	1	-
32	590261002	SPIKE *Kit - Inner Std*	1	-
33	582179601	SEALING	1	-
34	589349001	SEALING	1	-
35	590261101	GROMMET	1	-
36	582157101	GROMMET	1	-
37	589527701	GROMMET	1	-
38	501515401	SUPPORT	1	-
1	577607401	CRANKSHAFT ASSY -	1	-
2	577572401	NEEDLE BEARING -	1	-
3	587293401	BALL BEARING -	2	-
4	582812601	RADIAL SEAL -	2	-
1	579798701	CYLINDER COVER -	1	-
1	590150305	CYLINDER ASSY *With instruction to download new Firmware*	1	-
2	547282401	PISTON ASSY	1	-

Ref.	Article N.	Description	Qty	Kit
		With instruction to download new Firmware		
3	576627401	PISTON RING *- up to s/n 572XPG; 20242704550, 572XP; 20242705666, Only for 576626706* *Piston assy*	2	-
3	529317601	PISTON RING *From s/n - 572XPG; 20242704551, 572XP; 20242705667, Only for 547282401* *Piston assy*	2	-
4	577572401	NEEDLE BEARING	1	-
5	737431200	SNAP RING	2	-
6	503552201	PLUG	1	-
7	584288701	DECOMPRESSION VALVE	1	-
8	503235111	SPARK PLUG	1	-
9	501811202	SCREW ITXSCM	4	-
10	589527901	SLEEVE	4	-
11	577239801	GASKET	1	-
12	578864701	GASKET KIT	1	-
1	578200701	FUEL TANK ASSY	1	-
2	501152901	TANK VENT ASSY	1	-
3	537208401	THROTTLE LOCKOUT	1	-
4	576162802	THROTTLE CABLE ASSY	1	-
5	544099901	SPRING	1	-
6	576956701	THROTTLE	1	-
7	720182520	PARALLEL PIN	1	-
8	501007601	SUPPORT	1	-
9	575010201	WEAR PROTECTION	1	-
10	523085501	DEFLECTION LIMITER	1	-
11	577062701	ANTIVIBRATION ELEMENT *Hard*	1	-
11	577062702	ANTIVIBRATION ELEMENT	1	-
12	503854103	ANTIVIBRATION ELEMENT *Hard*	1	-
12	503854104	ANTIVIBRATION ELEMENT	1	-
13	529578202	FUEL HOSE ASSY *With magnet*	1	-
14	503443201	FUEL FILTER *18-40 µm (Blue)*	1	-
14	503443205	FUEL FILTER *18-40 µm (Blue) Mega pack (100 pcs)*	1	-
15	522620003	TANK CAP ASSY	1	-
16	589241101	GASKET	1	-

Ref.	Article N.	Description	Qty	Kit
17	503578901	HOLDER	1	-
18	525887402	SCREW CITXPANT	1	-
19	537205601	COVER *H572 XP*	1	-
19	589698901	HANDLE INSERT *H572 XPG*	1	-
20	590567001	DECAL	1	-
1	579484302	FRONT HANDLE ASSY -	1	-
2	504064501	SCREW ITXPANM -	1	-
3	589699101	ANTIVIBRATION ELEMENT -	1	-
3	589699102	ANTIVIBRATION ELEMENT *Hard*	1	-
4	503226601	SQUARE NUT -	1	-
5	525798103	SCREW ITXSCFT -	3	-
6	575885703	SCREW ITXSCFM -	2	-
8	582654201	COVER -	1	-
10	537252501	CONTACT PLATE -	1	-
11	537088301	GROMMET -	1	-
12	590469101	PROTECTION -	1	-
1	579504003	FRONT HANDLE ASSY *Wrap*	1	-
2	579504002	FRONT HANDLE ASSY -	1	-
3	589699101	ANTIVIBRATION ELEMENT -	1	-
3	589699102	ANTIVIBRATION ELEMENT *Hard*	1	-
4	503226601	SQUARE NUT -	1	-
5	525798103	SCREW ITXSCFT -	3	-
6	575885703	SCREW ITXSCFM -	3	-

Ref.	Article N.	Description	Qty	Kit
8	582654201	COVER -	1	-
10	537252501	CONTACT PLATE -	1	-
12	525824902	SCREW ITXSCM -	1	-
13	537331007	CLUTCH COVER ASSY -	1	-
14	503220001	HEXAGON NUT -	1	-
15	589772101	SPIKE *Kit*	1	-
16	525887402	SCREW CITXPANT -	1	-
17	503922701	SPIKE -	1	-
18	537017201	SPIKE -	1	-
19	589771301	CHAIN CATCHER -	1	-
20	537024401	WEAR PROTECTION -	1	-
21	504064501	SCREW ITXPANM -	1	-
22	590469101	PROTECTION -	1	-
23	537088301	GROMMET -	1	-
1	579504001	FRONT HANDLE ASSY -	1	-
2	504064501	SCREW ITXPANM -	1	-
3	575015301	ANTIVIBRATION ELEMENT -	0	-
3	575015303	ANTIVIBRATION ELEMENT *Hard*	1	-
4	503226601	SQUARE NUT -	1	-
5	525798103	SCREW ITXSCFT -	3	-
6	575885703	SCREW ITXSCFM -	3	-
12	525824902	SCREW ITXSCM	2	-

Ref.	Article N.	Description	Qty	Kit
		-		
13	537331007	CLUTCH COVER ASSY -	1	-
14	503220001	HEXAGON NUT -	2	-
15	589772101	SPIKE *Kit*	1	-
16	525887402	SCREW CITXPANT -	1	-
17	503922701	SPIKE -	1	-
18	537017201	SPIKE -	1	-
19	589771301	CHAIN CATCHER -	1	-
20	537024401	WEAR PROTECTION -	1	-
1	579484303	FRONT HANDLE ASSY -	1	-
2	504064501	SCREW ITXPANM -	1	-
3	575015301	ANTIVIBRATION ELEMENT -	1	-
3	575015303	ANTIVIBRATION ELEMENT *Hard*	0	-
4	503226601	SQUARE NUT -	1	-
5	525798103	SCREW ITXSCFT -	3	-
6	575885703	SCREW ITXSCFM -	2	-
1	579484302	FRONT HANDLE ASSY -	1	-
2	504064501	SCREW ITXPANM -	1	-
3	589699101	ANTIVIBRATION ELEMENT -	1	-
3	589699102	ANTIVIBRATION ELEMENT *Hard*	1	-
4	503226601	SQUARE NUT -	1	-
5	525798103	SCREW ITXSCFT -	3	-

Ref.	Article N.	Description	Qty	Kit
6	575885703	SCREW ITXSCFM -	2	-
8	582654201	COVER -	1	-
10	537252501	CONTACT PLATE -	1	-
11	537088301	GROMMET -	1	-
12	590688101	GENERATOR STATOR -	1	-
13	526818102	SCREW ITXSCM -	2	-
14	590688301	THERMOSTAT ASSY -	1	-
16	588168601	FOIL ELEMENT -	1	-
17	575396402	DECAL -	1	-
18	576777202	FLYWHEEL ASSY -	1	-
19	503220401	NUT -	1	-
20	590281301	PAWL *Kit*	1	-
21	589698901	HANDLE INSERT -	1	-
22	526221801	SCREW CITXPANT -	1	-
24	577419006	INLET ELBOW *Heated*	1	-
25	731231401	HEXAGON NUT -	1	-
26	589378401	SEALING -	1	-
27	525619201	SEALING -	1	-
28	525619001	SEALING -	1	-
29	577536402	WIRING ASSY -	1	-
30	510017202	CHOKE CONTROL ASSY -	1	-
31	505156201	SCREW	1	-

Ref.	Article N.	Description	Qty	Kit
		-		
32	590469101	PROTECTION -	1	-
1	576777201	FLYWHEEL ASSY *H572 XP*	1	-
2	590281301	PAWL *Kit*	1	-
3	503220401	NUT -	1	-
4	588193102	IGNITION MODULE ASSY -	1	-
5	590298801	SPARK PLUG CAP -	1	-
6	579451801	WIRE HOLDER -	1	-
7	525824902	SCREW ITXSCM -	2	-
1	587217801	MUFFLER KIT -	1	-
2	585390001	SPARK ARRESTER -	1	-
3	724128759	SCREW CRPANM -	1	-
4	525825106	SCREW ITXSCM -	2	-
5	587351001	HEAT DEFLECTOR -	1	-
6	587350901	GASKET -	1	-
7	578864701	GASKET KIT -	1	-
8	525762503	SCREW ITXSCM -	2	-
1	582752008	CRANKCASE ASSY	1	-
1	575527604	STARTER HOUSING	1	-
2	598750301	SPRING CASSETTE ASSY	1	-
3	525887401	SCREW CITXPANT	2	-
4	531314801	STARTER PULLEY ASSY	1	-
5	576356601	SCREW ITXSCT	1	-
6	505305125	STARTER ROPE	1	-
7	537232501	STARTER HANDLE	1	-
8	525824501	SCREW CITXPANMO	4	-

Ref.	Article N.	Description	Qty	Kit
9	575525802	STARTER HOUSING	1	-
10	537283201	SLEEVE	1	-
11	575396401	DECAL *H572 XP*	1	-
12	575396402	DECAL *H572 XPG*	1	-
13	575525201	BAFFLE	1	-
1	503558513	TOOL -	1	-
2	501691701	COMBINATION WRENCH -	1	-
3	575880701	WRENCH -	1	-
4	583897101	DIAGNOSTIC TOOL KIT -	1	-
5	576183401	CABLE ASSY -	1	-
6	576952201	CABLE ASSY -	1	-
7	575527501	WINTER KIT -	1	-
8	576162601	WINTER COVER -	1	-
9	503217016	SCREW CCRPANT -	2	-
10	740420100	O-RING -	2	-
11	590261001	SPIKE *Outer, std*	1	-
12	575236501	SPIKE -	1	-
13	503222401	LOCK NUT -	2	-
14	525755202	SCREW ITXSCFM -	2	-
15	589772101	SPIKE -	1	-
16	589771301	CHAIN CATCHER -	1	-
17	537024401	WEAR PROTECTION -	1	-
18	537017201	SPIKE -	1	-

Ref.	Article N.	Description	Qty	Kit
19	503922701	SPIKE -	1	-
20	525887402	SCREW CITXPANT -	1	-
21	525824902	SCREW ITXSCM -	2	-
22	503220001	HEXAGON NUT -	2	-

IGNITION SYSTEM

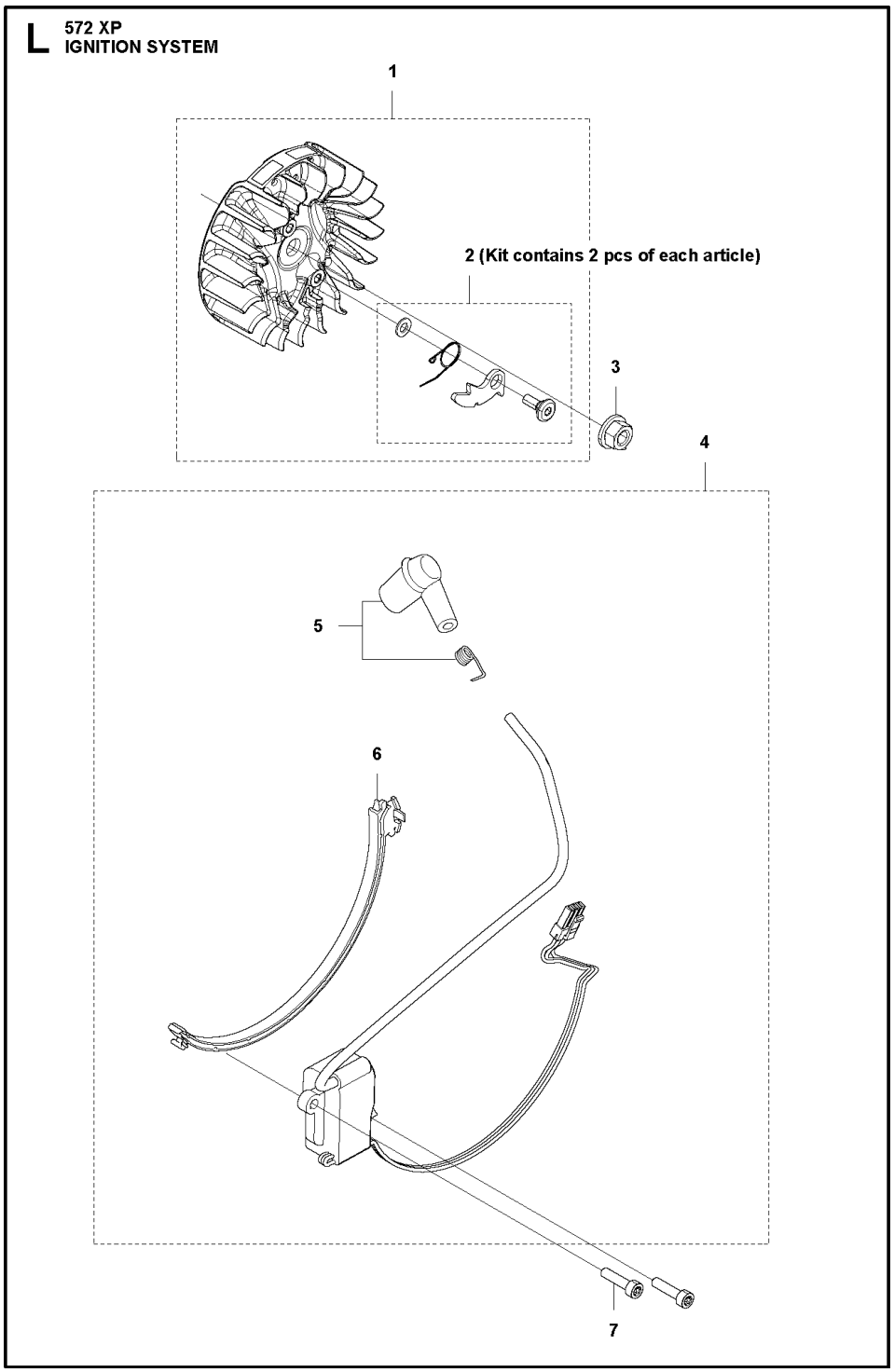

Ref.	Article N.	Description	Qty	Kit
1	596762303	AIR FILTER *Nylon Mesh - 64 Micron Rating - Black*	1	-
1	596762302	AIR FILTER *Nylon Mesh - 25 Micron Rating - Yellow*	1	-
1	596762301	AIR FILTER *Non-Woven - Clear*	1	-

Ref.	Article N.	Description	Qty	Kit
2	577419005	INLET ELBOW *Std*	1	-
2	577419006	INLET ELBOW *Heated*	1	-
3	731231401	HEXAGON NUT	1	-
4	525619201	SEALING	1	-
5	525619001	SEALING	1	-
6	577536402	WIRING ASSY	1	-
7	510017202	CHOKE CONTROL ASSY	1	-
8	505156201	SCREW	1	-
9	589378401	SEALING	1	-
10	523056801	FUEL HOSE	1	-
11	525344303	FUEL HOSE	1	-
12	581143101	SCREW ITXSCFM	2	-
13	525588101	SEALING	1	-
14	505165202	FLANGE	1	-
15	503226503	SQUARE NUT	2	-
16	501182001	BAFFLE	1	-
17	575235301	INLET PIPE *Std*	1	-
17	575235302	INLET PIPE *For extrem cold conditions.*	1	-
18	526818101	SCREW ITXSCM	4	-
19	591158301	CARBURETTOR KIT *C1M-140054E*	1	-
20	582179501	SEALING	1	-
21	590059501	SEALING	1	-
22	537213205	KNOB	1	-
23	589340701	CONTACT CLAMP	1	-
24	589340601	RETAINER	1	-
25	582025101	SUPPORT SLEEVE	1	-
26	503936601	PURGE	1	-
1	591158301	CARBURETTOR KIT *C1M-140054E*	1	-
2	522518901	GASKET KIT *GASKET KIT*	1	-
3	590191501	REPAIR KIT *Metering Kit*	1	-
4	590191601	CARBURETTOR *Throttle Lever Kit*	1	-

Ref.	Article N.	Description	Qty	Kit
6	537383401	SPRING -	1	-
7	522517901	ROD -	1	-
15	522545101	SCREW -	4	-
1	576139602	HAND GUARD -	1	-
2	590105301	SCREW KIT *KIT - Screws and Bushings*	1	-
3	590110201	CHAIN BRAKE -	1	-
4	590105602	KNEE JOINT -	1	-
5	503752202	BRAKE BAND ASSY -	1	-
6	574825601	COVER -	1	-
7	582213301	SCREW -	3	-
1	577603801	CLUTCH DRUM ASSY -	1	-
2	503432001	NEEDLE HOLDER -	1	-
3	501598002	RIM SPROCKET -	1	-
4	503752401	WASHER -	1	-
5	503272101	E-CLIP -	1	-
6	586798404	CLUTCH ASSY -	1	-
7	537360601	CLUTCH SPRING -	3	-
8	582270108	PUMP PINION -	1	-
9	589028403	OIL PUMP ASSY -	1	-
10	590119703	PUMP PISTON -	1	-
11	590120101	OIL PUMP -	1	-
12	576987401	OIL PRESSURE HOSE	1	-

Ref.	Article N.	Description	Qty	Kit
		-		
13	526818102	SCREW ITXSCM -	2	-
14	588404702	OIL HOSE -	1	-
15	501544102	OIL SCREEN -	1	-
1	594907802	CLUTCH COVER ASSY *Wrap*	1	-
1	599591701	CLUTCH COVER ASSY	1	-
2	537172604	CLUTCH COVER *Wrap*	1	-
2	575236303	CLUTCH COVER	1	-
3	537174101	CHIP GUARD *Wrap*	1	-
3	575236401	CHIP GUARD	1	-
4	526221801	SCREW CITXPANT	3	-
4	525887402	SCREW CITXPANT *Wrap*	4	-
5	501517201	CHAIN GUIDE	1	-
5	537043401	CHAIN GUIDE *Wrap*	1	-
6	537016801	COVER *Wrap*	1	-
6	576424301	COVER	1	-
7	503220001	HEXAGON NUT *Wrap*	2	-
7	505197301	NUT *-up to s/n 224400900*	2	-
9	590104701	CHAIN TENSIONER KIT	1	-
10	590104801	WORM SCREW	1	-
11	590105101	WORM WHEEL	1	-
12	531012901	CHAIN BRAKE *From s/n 224400901-, 2pcs Unlosable nuts and 2pcs Snap rings*	1	-
13	531222801	SNAP RING	1	-
1	590195605	CRANKCASE ASSY	1	-
2	537051301	BAR BOLT	2	-
3	537203001	PIN KNEE-JOINT	1	-
4	530026119	CHECK VALVE	1	-
5	537403501	FILTER	1	-
6	593806001	GUIDE BUSHING	2	-

Ref.	Article N.	Description	Qty	Kit
7	522620003	TANK CAP ASSY	1	-
9	589241101	GASKET	1	-
10	503578901	HOLDER	1	-
11	575616301	CHAIN GUIDE PLATE	1	-
12	526221801	SCREW CITXPANT	1	-
13	575841104	SCREW ITXSCM	6	-
14	537377902	CHAIN CATCHER	1	-
15	525824401	SCREW ITXSCM	2	-
16	595303003	SNAP LOCKING	3	-
17	525798103	SCREW ITXSCFT	2	-
18	534114101	CARBURETTOR AREA BASE	1	-
19	583098401	FIXING WASHER	1	-
20	525755202	SCREW ITXSCFM	4	-
21	581559201	BELLOWS	1	-
22	597909701	DAMPER *Mounting*	2	-
23	589340502	AIR NOZZLE	1	-
24	574353505	SCREW ITXSCM	1	-
29	578864701	GASKET KIT	1	-
32	590261002	SPIKE *Kit - Inner Std*	1	-
33	582179601	SEALING	1	-
34	589349001	SEALING	1	-
35	590261101	GROMMET	1	-
36	582157101	GROMMET	1	-
37	589527701	GROMMET	1	-
38	501515401	SUPPORT	1	-
1	577607401	CRANKSHAFT ASSY -	1	-
2	577572401	NEEDLE BEARING -	1	-
3	587293401	BALL BEARING -	2	-
4	582812601	RADIAL SEAL -	2	-
1	579798701	CYLINDER COVER -	1	-
1	590150305	CYLINDER ASSY *With instruction to download new Firmware*	1	-
2	547282401	PISTON ASSY	1	-

Ref.	Article N.	Description	Qty	Kit
		With instruction to download new Firmware		
3	576627401	PISTON RING *- up to s/n 572XPG; 20242704550, 572XP; 20242705666, Only for 576626706* *Piston assy*	2	-
3	529317601	PISTON RING *From s/n - 572XPG; 20242704551, 572XP; 20242705667, Only for 547282401* *Piston assy*	2	-
4	577572401	NEEDLE BEARING	1	-
5	737431200	SNAP RING	2	-
6	503552201	PLUG	1	-
7	584288701	DECOMPRESSION VALVE	1	-
8	503235111	SPARK PLUG	1	-
9	501811202	SCREW ITXSCM	4	-
10	589527901	SLEEVE	4	-
11	577239801	GASKET	1	-
12	578864701	GASKET KIT	1	-
1	578200701	FUEL TANK ASSY	1	-
2	501152901	TANK VENT ASSY	1	-
3	537208401	THROTTLE LOCKOUT	1	-
4	576162802	THROTTLE CABLE ASSY	1	-
5	544099901	SPRING	1	-
6	576956701	THROTTLE	1	-
7	720182520	PARALLEL PIN	1	-
8	501007601	SUPPORT	1	-
9	575010201	WEAR PROTECTION	1	-
10	523085501	DEFLECTION LIMITER	1	-
11	577062701	ANTIVIBRATION ELEMENT *Hard*	1	-
11	577062702	ANTIVIBRATION ELEMENT	1	-
12	503854103	ANTIVIBRATION ELEMENT *Hard*	1	-
12	503854104	ANTIVIBRATION ELEMENT	1	-
13	529578202	FUEL HOSE ASSY *With magnet*	1	-
14	503443201	FUEL FILTER *18-40 µm (Blue)*	1	-
14	503443205	FUEL FILTER *18-40 µm (Blue) Mega pack (100 pcs)*	1	-
15	522620003	TANK CAP ASSY	1	-
16	589241101	GASKET	1	-

Ref.	Article N.	Description	Qty	Kit
17	503578901	HOLDER	1	-
18	525887402	SCREW CITXPANT	1	-
19	537205601	COVER *H572 XP*	1	-
19	589698901	HANDLE INSERT *H572 XPG*	1	-
20	590567001	DECAL	1	-
1	579484302	FRONT HANDLE ASSY -	1	-
2	504064501	SCREW ITXPANM -	1	-
3	589699101	ANTIVIBRATION ELEMENT -	1	-
3	589699102	ANTIVIBRATION ELEMENT *Hard*	1	-
4	503226601	SQUARE NUT -	1	-
5	525798103	SCREW ITXSCFT -	3	-
6	575885703	SCREW ITXSCFM -	2	-
8	582654201	COVER -	1	-
10	537252501	CONTACT PLATE -	1	-
11	537088301	GROMMET -	1	-
12	590469101	PROTECTION -	1	-
1	579504003	FRONT HANDLE ASSY *Wrap*	1	-
2	579504002	FRONT HANDLE ASSY -	1	-
3	589699101	ANTIVIBRATION ELEMENT -	1	-
3	589699102	ANTIVIBRATION ELEMENT *Hard*	1	-
4	503226601	SQUARE NUT -	1	-
5	525798103	SCREW ITXSCFT -	3	-
6	575885703	SCREW ITXSCFM -	3	-

Ref.	Article N.	Description	Qty	Kit
8	582654201	COVER -	1	-
10	537252501	CONTACT PLATE -	1	-
12	525824902	SCREW ITXSCM -	1	-
13	537331007	CLUTCH COVER ASSY -	1	-
14	503220001	HEXAGON NUT -	1	-
15	589772101	SPIKE *Kit*	1	-
16	525887402	SCREW CITXPANT -	1	-
17	503922701	SPIKE -	1	-
18	537017201	SPIKE -	1	-
19	589771301	CHAIN CATCHER -	1	-
20	537024401	WEAR PROTECTION -	1	-
21	504064501	SCREW ITXPANM -	1	-
22	590469101	PROTECTION -	1	-
23	537088301	GROMMET -	1	-
1	579504001	FRONT HANDLE ASSY -	1	-
2	504064501	SCREW ITXPANM -	1	-
3	575015301	ANTIVIBRATION ELEMENT -	0	-
3	575015303	ANTIVIBRATION ELEMENT *Hard*	1	-
4	503226601	SQUARE NUT -	1	-
5	525798103	SCREW ITXSCFT -	3	-
6	575885703	SCREW ITXSCFM -	3	-
12	525824902	SCREW ITXSCM	2	-

Ref.	Article N.	Description	Qty	Kit
		-		
13	537331007	CLUTCH COVER ASSY -	1	-
14	503220001	HEXAGON NUT -	2	-
15	589772101	SPIKE *Kit*	1	-
16	525887402	SCREW CITXPANT -	1	-
17	503922701	SPIKE -	1	-
18	537017201	SPIKE -	1	-
19	589771301	CHAIN CATCHER -	1	-
20	537024401	WEAR PROTECTION -	1	-
1	579484303	FRONT HANDLE ASSY -	1	-
2	504064501	SCREW ITXPANM -	1	-
3	575015301	ANTIVIBRATION ELEMENT -	1	-
3	575015303	ANTIVIBRATION ELEMENT *Hard*	0	-
4	503226601	SQUARE NUT -	1	-
5	525798103	SCREW ITXSCFT -	3	-
6	575885703	SCREW ITXSCFM -	2	-
1	579484302	FRONT HANDLE ASSY -	1	-
2	504064501	SCREW ITXPANM -	1	-
3	589699101	ANTIVIBRATION ELEMENT -	1	-
3	589699102	ANTIVIBRATION ELEMENT *Hard*	1	-
4	503226601	SQUARE NUT -	1	-
5	525798103	SCREW ITXSCFT -	3	-

Ref.	Article N.	Description	Qty	Kit
6	575885703	SCREW ITXSCFM -	2	-
8	582654201	COVER -	1	-
10	537252501	CONTACT PLATE -	1	-
11	537088301	GROMMET -	1	-
12	590688101	GENERATOR STATOR -	1	-
13	526818102	SCREW ITXSCM -	2	-
14	590688301	THERMOSTAT ASSY -	1	-
16	588168601	FOIL ELEMENT -	1	-
17	575396402	DECAL -	1	-
18	576777202	FLYWHEEL ASSY -	1	-
19	503220401	NUT -	1	-
20	590281301	PAWL *Kit*	1	-
21	589698901	HANDLE INSERT -	1	-
22	526221801	SCREW CITXPANT -	1	-
24	577419006	INLET ELBOW *Heated*	1	-
25	731231401	HEXAGON NUT -	1	-
26	589378401	SEALING -	1	-
27	525619201	SEALING -	1	-
28	525619001	SEALING -	1	-
29	577536402	WIRING ASSY -	1	-
30	510017202	CHOKE CONTROL ASSY -	1	-
31	505156201	SCREW	1	-

Ref.	Article N.	Description	Qty	Kit
		-		
32	590469101	PROTECTION -	1	-
1	576777201	FLYWHEEL ASSY *H572 XP*	1	-
2	590281301	PAWL *Kit*	1	-
3	503220401	NUT -	1	-
4	588193102	IGNITION MODULE ASSY -	1	-
5	590298801	SPARK PLUG CAP -	1	-
6	579451801	WIRE HOLDER -	1	-
7	525824902	SCREW ITXSCM -	2	-
1	587217801	MUFFLER KIT -	1	-
2	585390001	SPARK ARRESTER -	1	-
3	724128759	SCREW CRPANM -	1	-
4	525825106	SCREW ITXSCM -	2	-
5	587351001	HEAT DEFLECTOR -	1	-
6	587350901	GASKET -	1	-
7	578864701	GASKET KIT -	1	-
8	525762503	SCREW ITXSCM -	2	-
1	582752008	CRANKCASE ASSY	1	-
1	575527604	STARTER HOUSING	1	-
2	598750301	SPRING CASSETTE ASSY	1	-
3	525887401	SCREW CITXPANT	2	-
4	531314801	STARTER PULLEY ASSY	1	-
5	576356601	SCREW ITXSCT	1	-
6	505305125	STARTER ROPE	1	-
7	537232501	STARTER HANDLE	1	-
8	525824501	SCREW CITXPANMO	4	-

Ref.	Article N.	Description	Qty	Kit
9	575525802	STARTER HOUSING	1	-
10	537283201	SLEEVE	1	-
11	575396401	DECAL *H572 XP*	1	-
12	575396402	DECAL *H572 XPG*	1	-
13	575525201	BAFFLE	1	-
1	503558513	TOOL -	1	-
2	501691701	COMBINATION WRENCH -	1	-
3	575880701	WRENCH -	1	-
4	583897101	DIAGNOSTIC TOOL KIT -	1	-
5	576183401	CABLE ASSY -	1	-
6	576952201	CABLE ASSY -	1	-
7	575527501	WINTER KIT -	1	-
8	576162601	WINTER COVER -	1	-
9	503217016	SCREW CCRPANT -	2	-
10	740420100	O-RING -	2	-
11	590261001	SPIKE *Outer, std*	1	-
12	575236501	SPIKE -	1	-
13	503222401	LOCK NUT -	2	-
14	525755202	SCREW ITXSCFM -	2	-
15	589772101	SPIKE -	1	-
16	589771301	CHAIN CATCHER -	1	-
17	537024401	WEAR PROTECTION -	1	-
18	537017201	SPIKE -	1	-

Ref.	Article N.	Description	Qty	Kit
19	503922701	SPIKE -	1	-
20	525887402	SCREW CITXPANT -	1	-
21	525824902	SCREW ITXSCM -	2	-
22	503220001	HEXAGON NUT -	2	-

MUFFLER

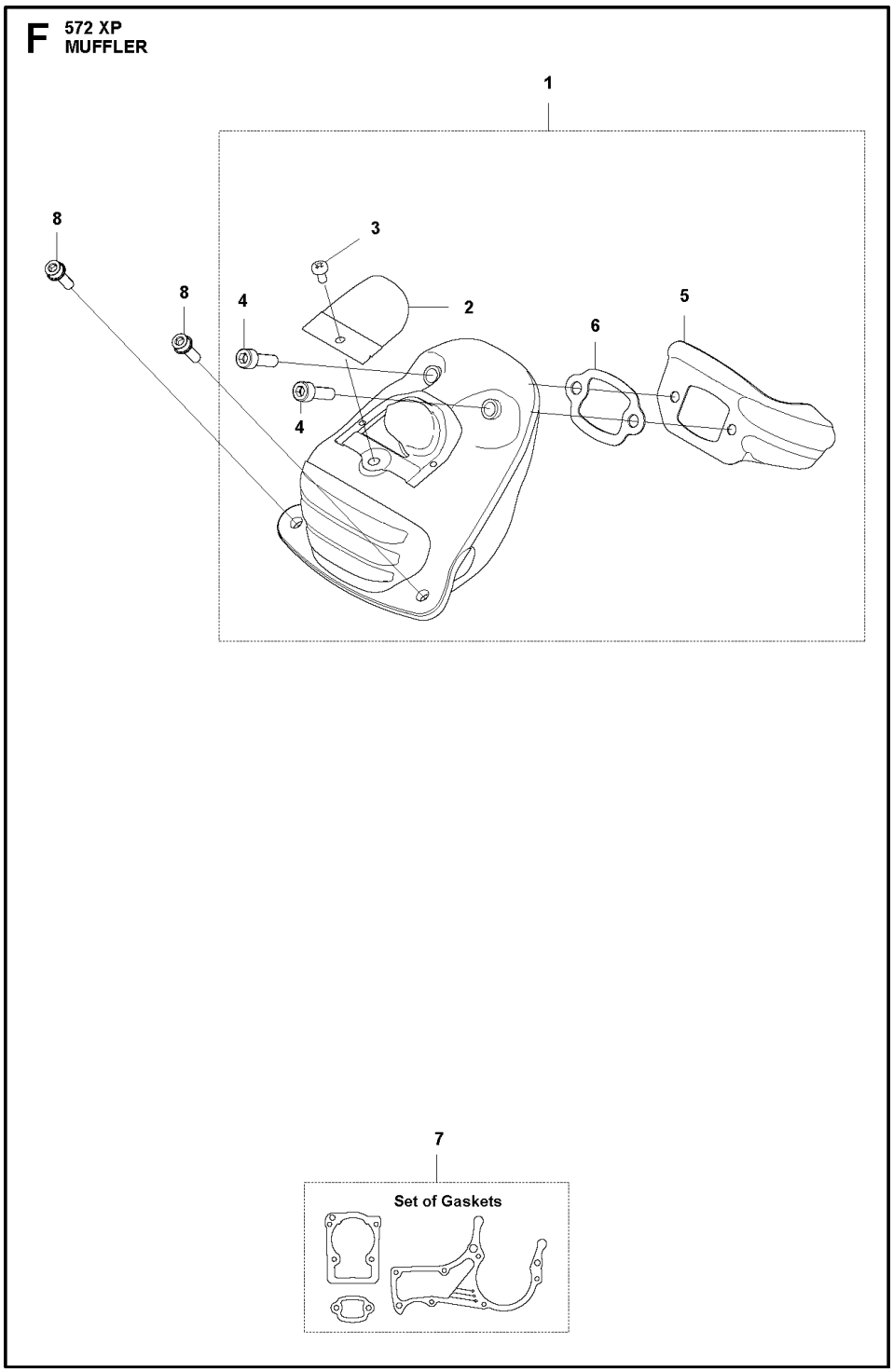

Ref.	Article N.	Description	Qty	Kit
1	596762303	AIR FILTER *Nylon Mesh - 64 Micron Rating - Black*	1	-
1	596762302	AIR FILTER *Nylon Mesh - 25 Micron Rating - Yellow*	1	-
1	596762301	AIR FILTER *Non-Woven - Clear*	1	-

Ref.	Article N.	Description	Qty	Kit
2	577419005	INLET ELBOW *Std*	1	-
2	577419006	INLET ELBOW *Heated*	1	-
3	731231401	HEXAGON NUT	1	-
4	525619201	SEALING	1	-
5	525619001	SEALING	1	-
6	577536402	WIRING ASSY	1	-
7	510017202	CHOKE CONTROL ASSY	1	-
8	505156201	SCREW	1	-
9	589378401	SEALING	1	-
10	523056801	FUEL HOSE	1	-
11	525344303	FUEL HOSE	1	-
12	581143101	SCREW ITXSCFM	2	-
13	525588101	SEALING	1	-
14	505165202	FLANGE	1	-
15	503226503	SQUARE NUT	2	-
16	501182001	BAFFLE	1	-
17	575235301	INLET PIPE *Std*	1	-
17	575235302	INLET PIPE *For extrem cold conditions.*	1	-
18	526818101	SCREW ITXSCM	4	-
19	591158301	CARBURETTOR KIT *C1M-140054E*	1	-
20	582179501	SEALING	1	-
21	590059501	SEALING	1	-
22	537213205	KNOB	1	-
23	589340701	CONTACT CLAMP	1	-
24	589340601	RETAINER	1	-
25	582025101	SUPPORT SLEEVE	1	-
26	503936601	PURGE	1	-
1	591158301	CARBURETTOR KIT *C1M-140054E*	1	-
2	522518901	GASKET KIT *GASKET KIT*	1	-
3	590191501	REPAIR KIT *Metering Kit*	1	-
4	590191601	CARBURETTOR *Throttle Lever Kit*	1	-

Ref.	Article N.	Description	Qty	Kit
6	537383401	SPRING -	1	-
7	522517901	ROD -	1	-
15	522545101	SCREW -	4	-
1	576139602	HAND GUARD -	1	-
2	590105301	SCREW KIT *KIT - Screws and Bushings*	1	-
3	590110201	CHAIN BRAKE -	1	-
4	590105602	KNEE JOINT -	1	-
5	503752202	BRAKE BAND ASSY -	1	-
6	574825601	COVER -	1	-
7	582213301	SCREW -	3	-
1	577603801	CLUTCH DRUM ASSY -	1	-
2	503432001	NEEDLE HOLDER -	1	-
3	501598002	RIM SPROCKET -	1	-
4	503752401	WASHER -	1	-
5	503272101	E-CLIP -	1	-
6	586798404	CLUTCH ASSY -	1	-
7	537360601	CLUTCH SPRING -	3	-
8	582270108	PUMP PINION -	1	-
9	589028403	OIL PUMP ASSY -	1	-
10	590119703	PUMP PISTON -	1	-
11	590120101	OIL PUMP -	1	-
12	576987401	OIL PRESSURE HOSE	1	-

Ref.	Article N.	Description	Qty	Kit
		-		
13	526818102	SCREW ITXSCM -	2	-
14	588404702	OIL HOSE -	1	-
15	501544102	OIL SCREEN -	1	-
1	594907802	CLUTCH COVER ASSY *Wrap*	1	-
1	599591701	CLUTCH COVER ASSY	1	-
2	537172604	CLUTCH COVER *Wrap*	1	-
2	575236303	CLUTCH COVER	1	-
3	537174101	CHIP GUARD *Wrap*	1	-
3	575236401	CHIP GUARD	1	-
4	526221801	SCREW CITXPANT	3	-
4	525887402	SCREW CITXPANT *Wrap*	4	-
5	501517201	CHAIN GUIDE	1	-
5	537043401	CHAIN GUIDE *Wrap*	1	-
6	537016801	COVER *Wrap*	1	-
6	576424301	COVER	1	-
7	503220001	HEXAGON NUT *Wrap*	2	-
7	505197301	NUT *-up to s/n 224400900*	2	-
9	590104701	CHAIN TENSIONER KIT	1	-
10	590104801	WORM SCREW	1	-
11	590105101	WORM WHEEL	1	-
12	531012901	CHAIN BRAKE *From s/n 224400901-, 2pcs Unlosable nuts and 2pcs Snap rings*	1	-
13	531222801	SNAP RING	1	-
1	590195605	CRANKCASE ASSY	1	-
2	537051301	BAR BOLT	2	-
3	537203001	PIN KNEE-JOINT	1	-
4	530026119	CHECK VALVE	1	-
5	537403501	FILTER	1	-
6	593806001	GUIDE BUSHING	2	-

Ref.	Article N.	Description	Qty	Kit
7	522620003	TANK CAP ASSY	1	-
9	589241101	GASKET	1	-
10	503578901	HOLDER	1	-
11	575616301	CHAIN GUIDE PLATE	1	-
12	526221801	SCREW CITXPANT	1	-
13	575841104	SCREW ITXSCM	6	-
14	537377902	CHAIN CATCHER	1	-
15	525824401	SCREW ITXSCM	2	-
16	595303003	SNAP LOCKING	3	-
17	525798103	SCREW ITXSCFT	2	-
18	534114101	CARBURETTOR AREA BASE	1	-
19	583098401	FIXING WASHER	1	-
20	525755202	SCREW ITXSCFM	4	-
21	581559201	BELLOWS	1	-
22	597909701	DAMPER *Mounting*	2	-
23	589340502	AIR NOZZLE	1	-
24	574353505	SCREW ITXSCM	1	-
29	578864701	GASKET KIT	1	-
32	590261002	SPIKE *Kit - Inner Std*	1	-
33	582179601	SEALING	1	-
34	589349001	SEALING	1	-
35	590261101	GROMMET	1	-
36	582157101	GROMMET	1	-
37	589527701	GROMMET	1	-
38	501515401	SUPPORT	1	-
1	577607401	CRANKSHAFT ASSY -	1	-
2	577572401	NEEDLE BEARING -	1	-
3	587293401	BALL BEARING -	2	-
4	582812601	RADIAL SEAL -	2	-
1	579798701	CYLINDER COVER -	1	-
1	590150305	CYLINDER ASSY *With instruction to download new Firmware*	1	-
2	547282401	PISTON ASSY	1	-

Ref.	Article N.	Description	Qty	Kit
		With instruction to download new Firmware		
3	576627401	PISTON RING *- up to s/n 572XPG; 20242704550, 572XP; 20242705666, Only for 576626706* *Piston assy*	2	-
3	529317601	PISTON RING *From s/n - 572XPG; 20242704551, 572XP; 20242705667, Only for 547282401* *Piston assy*	2	-
4	577572401	NEEDLE BEARING	1	-
5	737431200	SNAP RING	2	-
6	503552201	PLUG	1	-
7	584288701	DECOMPRESSION VALVE	1	-
8	503235111	SPARK PLUG	1	-
9	501811202	SCREW ITXSCM	4	-
10	589527901	SLEEVE	4	-
11	577239801	GASKET	1	-
12	578864701	GASKET KIT	1	-
1	578200701	FUEL TANK ASSY	1	-
2	501152901	TANK VENT ASSY	1	-
3	537208401	THROTTLE LOCKOUT	1	-
4	576162802	THROTTLE CABLE ASSY	1	-
5	544099901	SPRING	1	-
6	576956701	THROTTLE	1	-
7	720182520	PARALLEL PIN	1	-
8	501007601	SUPPORT	1	-
9	575010201	WEAR PROTECTION	1	-
10	523085501	DEFLECTION LIMITER	1	-
11	577062701	ANTIVIBRATION ELEMENT *Hard*	1	-
11	577062702	ANTIVIBRATION ELEMENT	1	-
12	503854103	ANTIVIBRATION ELEMENT *Hard*	1	-
12	503854104	ANTIVIBRATION ELEMENT	1	-
13	529578202	FUEL HOSE ASSY *With magnet*	1	-
14	503443201	FUEL FILTER *18-40 µm (Blue)*	1	-
14	503443205	FUEL FILTER *18-40 µm (Blue) Mega pack (100 pcs)*	1	-
15	522620003	TANK CAP ASSY	1	-
16	589241101	GASKET	1	-

Ref.	Article N.	Description	Qty	Kit
17	503578901	HOLDER	1	-
18	525887402	SCREW CITXPANT	1	-
19	537205601	COVER *H572 XP*	1	-
19	589698901	HANDLE INSERT *H572 XPG*	1	-
20	590567001	DECAL	1	-
1	579484302	FRONT HANDLE ASSY -	1	-
2	504064501	SCREW ITXPANM -	1	-
3	589699101	ANTIVIBRATION ELEMENT -	1	-
3	589699102	ANTIVIBRATION ELEMENT *Hard*	1	-
4	503226601	SQUARE NUT -	1	-
5	525798103	SCREW ITXSCFT -	3	-
6	575885703	SCREW ITXSCFM -	2	-
8	582654201	COVER -	1	-
10	537252501	CONTACT PLATE -	1	-
11	537088301	GROMMET -	1	-
12	590469101	PROTECTION -	1	-
1	579504003	FRONT HANDLE ASSY *Wrap*	1	-
2	579504002	FRONT HANDLE ASSY -	1	-
3	589699101	ANTIVIBRATION ELEMENT -	1	-
3	589699102	ANTIVIBRATION ELEMENT *Hard*	1	-
4	503226601	SQUARE NUT -	1	-
5	525798103	SCREW ITXSCFT -	3	-
6	575885703	SCREW ITXSCFM -	3	-

Ref.	Article N.	Description	Qty	Kit
8	582654201	COVER -	1	-
10	537252501	CONTACT PLATE -	1	-
12	525824902	SCREW ITXSCM -	1	-
13	537331007	CLUTCH COVER ASSY -	1	-
14	503220001	HEXAGON NUT -	1	-
15	589772101	SPIKE *Kit*	1	-
16	525887402	SCREW CITXPANT -	1	-
17	503922701	SPIKE -	1	-
18	537017201	SPIKE -	1	-
19	589771301	CHAIN CATCHER -	1	-
20	537024401	WEAR PROTECTION -	1	-
21	504064501	SCREW ITXPANM -	1	-
22	590469101	PROTECTION -	1	-
23	537088301	GROMMET -	1	-
1	579504001	FRONT HANDLE ASSY -	1	-
2	504064501	SCREW ITXPANM -	1	-
3	575015301	ANTIVIBRATION ELEMENT -	0	-
3	575015303	ANTIVIBRATION ELEMENT *Hard*	1	-
4	503226601	SQUARE NUT -	1	-
5	525798103	SCREW ITXSCFT -	3	-
6	575885703	SCREW ITXSCFM -	3	-
12	525824902	SCREW ITXSCM	2	-

Ref.	Article N.	Description	Qty	Kit
		-		
13	537331007	CLUTCH COVER ASSY -	1	-
14	503220001	HEXAGON NUT -	2	-
15	589772101	SPIKE *Kit*	1	-
16	525887402	SCREW CITXPANT -	1	-
17	503922701	SPIKE -	1	-
18	537017201	SPIKE -	1	-
19	589771301	CHAIN CATCHER -	1	-
20	537024401	WEAR PROTECTION -	1	-
1	579484303	FRONT HANDLE ASSY -	1	-
2	504064501	SCREW ITXPANM -	1	-
3	575015301	ANTIVIBRATION ELEMENT -	1	-
3	575015303	ANTIVIBRATION ELEMENT *Hard*	0	-
4	503226601	SQUARE NUT -	1	-
5	525798103	SCREW ITXSCFT -	3	-
6	575885703	SCREW ITXSCFM -	2	-
1	579484302	FRONT HANDLE ASSY -	1	-
2	504064501	SCREW ITXPANM -	1	-
3	589699101	ANTIVIBRATION ELEMENT -	1	-
3	589699102	ANTIVIBRATION ELEMENT *Hard*	1	-
4	503226601	SQUARE NUT -	1	-
5	525798103	SCREW ITXSCFT -	3	-

Ref.	Article N.	Description	Qty	Kit
6	575885703	SCREW ITXSCFM -	2	-
8	582654201	COVER -	1	-
10	537252501	CONTACT PLATE -	1	-
11	537088301	GROMMET -	1	-
12	590688101	GENERATOR STATOR -	1	-
13	526818102	SCREW ITXSCM -	2	-
14	590688301	THERMOSTAT ASSY -	1	-
16	588168601	FOIL ELEMENT -	1	-
17	575396402	DECAL -	1	-
18	576777202	FLYWHEEL ASSY -	1	-
19	503220401	NUT -	1	-
20	590281301	PAWL *Kit*	1	-
21	589698901	HANDLE INSERT -	1	-
22	526221801	SCREW CITXPANT -	1	-
24	577419006	INLET ELBOW *Heated*	1	-
25	731231401	HEXAGON NUT -	1	-
26	589378401	SEALING -	1	-
27	525619201	SEALING -	1	-
28	525619001	SEALING -	1	-
29	577536402	WIRING ASSY -	1	-
30	510017202	CHOKE CONTROL ASSY -	1	-
31	505156201	SCREW	1	-

Ref.	Article N.	Description	Qty	Kit
		-		
32	590469101	PROTECTION -	1	-
1	576777201	FLYWHEEL ASSY *H572 XP*	1	-
2	590281301	PAWL *Kit*	1	-
3	503220401	NUT -	1	-
4	588193102	IGNITION MODULE ASSY -	1	-
5	590298801	SPARK PLUG CAP -	1	-
6	579451801	WIRE HOLDER -	1	-
7	525824902	SCREW ITXSCM -	2	-
1	587217801	MUFFLER KIT -	1	-
2	585390001	SPARK ARRESTER -	1	-
3	724128759	SCREW CRPANM -	1	-
4	525825106	SCREW ITXSCM -	2	-
5	587351001	HEAT DEFLECTOR -	1	-
6	587350901	GASKET -	1	-
7	578864701	GASKET KIT -	1	-
8	525762503	SCREW ITXSCM -	2	-
1	582752008	CRANKCASE ASSY	1	-
1	575527604	STARTER HOUSING	1	-
2	598750301	SPRING CASSETTE ASSY	1	-
3	525887401	SCREW CITXPANT	2	-
4	531314801	STARTER PULLEY ASSY	1	-
5	576356601	SCREW ITXSCT	1	-
6	505305125	STARTER ROPE	1	-
7	537232501	STARTER HANDLE	1	-
8	525824501	SCREW CITXPANMO	4	-

Ref.	Article N.	Description	Qty	Kit
9	575525802	STARTER HOUSING	1	-
10	537283201	SLEEVE	1	-
11	575396401	DECAL *H572 XP*	1	-
12	575396402	DECAL *H572 XPG*	1	-
13	575525201	BAFFLE	1	-
1	503558513	TOOL -	1	-
2	501691701	COMBINATION WRENCH -	1	-
3	575880701	WRENCH -	1	-
4	583897101	DIAGNOSTIC TOOL KIT -	1	-
5	576183401	CABLE ASSY -	1	-
6	576952201	CABLE ASSY -	1	-
7	575527501	WINTER KIT -	1	-
8	576162601	WINTER COVER -	1	-
9	503217016	SCREW CCRPANT -	2	-
10	740420100	O-RING -	2	-
11	590261001	SPIKE *Outer, std*	1	-
12	575236501	SPIKE -	1	-
13	503222401	LOCK NUT -	2	-
14	525755202	SCREW ITXSCFM -	2	-
15	589772101	SPIKE -	1	-
16	589771301	CHAIN CATCHER -	1	-
17	537024401	WEAR PROTECTION -	1	-
18	537017201	SPIKE -	1	-

Ref.	Article N.	Description	Qty	Kit
19	503922701	SPIKE -	1	-
20	525887402	SCREW CITXPANT -	1	-
21	525824902	SCREW ITXSCM -	2	-
22	503220001	HEXAGON NUT -	2	-

SHORT BLOCK

H2 572 XP
CRANKCASE SHORT BLOCK

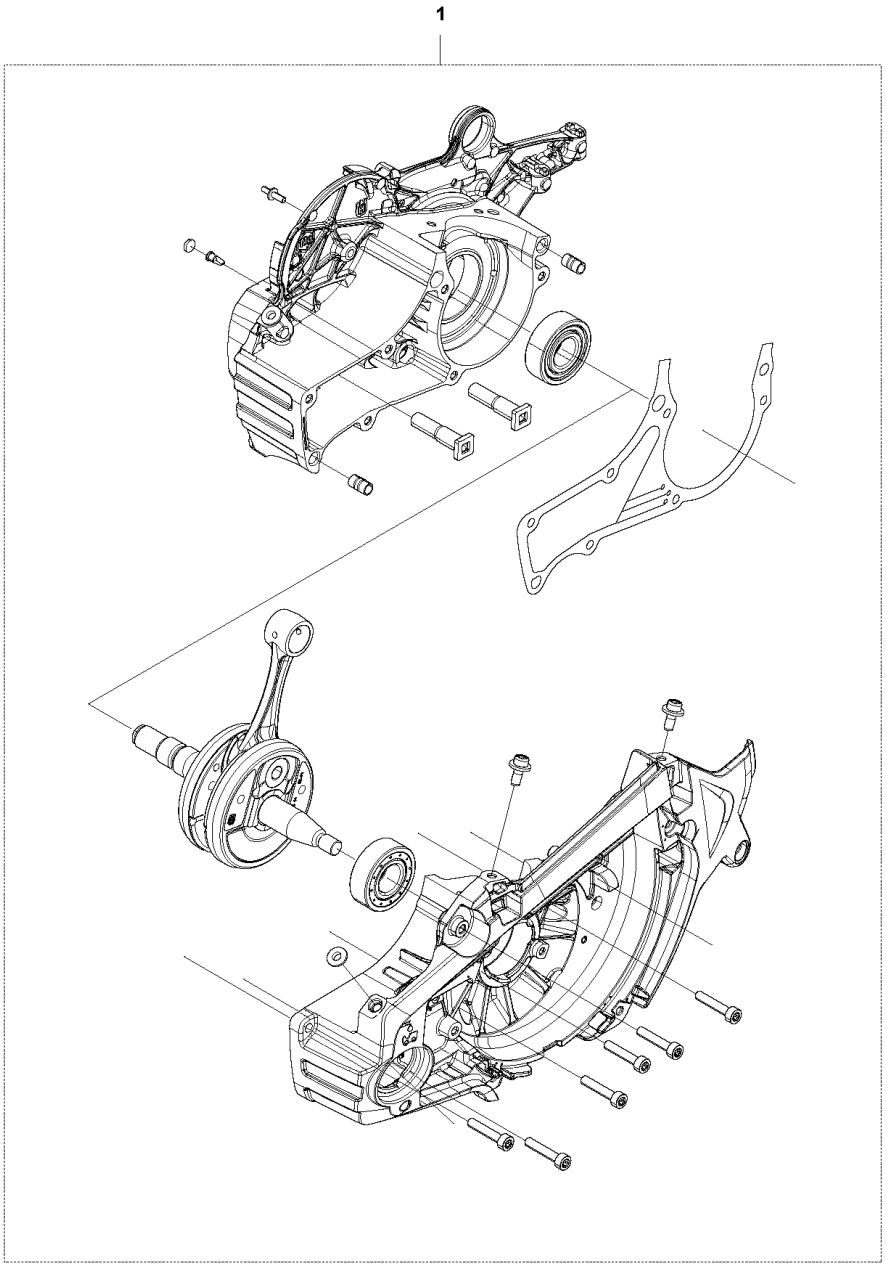

Ref.	Article N.	Description	Qty	Kit
1	596762303	AIR FILTER *Nylon Mesh - 64 Micron Rating - Black*	1	-
1	596762302	AIR FILTER *Nylon Mesh - 25 Micron Rating - Yellow*	1	-
1	596762301	AIR FILTER *Non-Woven - Clear*	1	-

Ref.	Article N.	Description	Qty	Kit
2	577419005	INLET ELBOW *Std*	1	-
2	577419006	INLET ELBOW *Heated*	1	-
3	731231401	HEXAGON NUT	1	-
4	525619201	SEALING	1	-
5	525619001	SEALING	1	-
6	577536402	WIRING ASSY	1	-
7	510017202	CHOKE CONTROL ASSY	1	-
8	505156201	SCREW	1	-
9	589378401	SEALING	1	-
10	523056801	FUEL HOSE	1	-
11	525344303	FUEL HOSE	1	-
12	581143101	SCREW ITXSCFM	2	-
13	525588101	SEALING	1	-
14	505165202	FLANGE	1	-
15	503226503	SQUARE NUT	2	-
16	501182001	BAFFLE	1	-
17	575235301	INLET PIPE *Std*	1	-
17	575235302	INLET PIPE *For extrem cold conditions.*	1	-
18	526818101	SCREW ITXSCM	4	-
19	591158301	CARBURETTOR KIT *C1M-140054E*	1	-
20	582179501	SEALING	1	-
21	590059501	SEALING	1	-
22	537213205	KNOB	1	-
23	589340701	CONTACT CLAMP	1	-
24	589340601	RETAINER	1	-
25	582025101	SUPPORT SLEEVE	1	-
26	503936601	PURGE	1	-
1	591158301	CARBURETTOR KIT *C1M-140054E*	1	-
2	522518901	GASKET KIT *GASKET KIT*	1	-
3	590191501	REPAIR KIT *Metering Kit*	1	-
4	590191601	CARBURETTOR *Throttle Lever Kit*	1	-

Ref.	Article N.	Description	Qty	Kit
6	537383401	SPRING -	1	-
7	522517901	ROD -	1	-
15	522545101	SCREW -	4	-
1	576139602	HAND GUARD -	1	-
2	590105301	SCREW KIT *KIT - Screws and Bushings*	1	-
3	590110201	CHAIN BRAKE -	1	-
4	590105602	KNEE JOINT -	1	-
5	503752202	BRAKE BAND ASSY -	1	-
6	574825601	COVER -	1	-
7	582213301	SCREW -	3	-
1	577603801	CLUTCH DRUM ASSY -	1	-
2	503432001	NEEDLE HOLDER -	1	-
3	501598002	RIM SPROCKET -	1	-
4	503752401	WASHER -	1	-
5	503272101	E-CLIP -	1	-
6	586798404	CLUTCH ASSY -	1	-
7	537360601	CLUTCH SPRING -	3	-
8	582270108	PUMP PINION -	1	-
9	589028403	OIL PUMP ASSY -	1	-
10	590119703	PUMP PISTON -	1	-
11	590120101	OIL PUMP -	1	-
12	576987401	OIL PRESSURE HOSE	1	-

Ref.	Article N.	Description	Qty	Kit
		-		
13	526818102	SCREW ITXSCM -	2	-
14	588404702	OIL HOSE -	1	-
15	501544102	OIL SCREEN -	1	-
1	594907802	CLUTCH COVER ASSY *Wrap*	1	-
1	599591701	CLUTCH COVER ASSY	1	-
2	537172604	CLUTCH COVER *Wrap*	1	-
2	575236303	CLUTCH COVER	1	-
3	537174101	CHIP GUARD *Wrap*	1	-
3	575236401	CHIP GUARD	1	-
4	526221801	SCREW CITXPANT	3	-
4	525887402	SCREW CITXPANT *Wrap*	4	-
5	501517201	CHAIN GUIDE	1	-
5	537043401	CHAIN GUIDE *Wrap*	1	-
6	537016801	COVER *Wrap*	1	-
6	576424301	COVER	1	-
7	503220001	HEXAGON NUT *Wrap*	2	-
7	505197301	NUT *-up to s/n 224400900*	2	-
9	590104701	CHAIN TENSIONER KIT	1	-
10	590104801	WORM SCREW	1	-
11	590105101	WORM WHEEL	1	-
12	531012901	CHAIN BRAKE *From s/n 224400901-, 2pcs Unlosable nuts and 2pcs Snap rings*	1	-
13	531222801	SNAP RING	1	-
1	590195605	CRANKCASE ASSY	1	-
2	537051301	BAR BOLT	2	-
3	537203001	PIN KNEE-JOINT	1	-
4	530026119	CHECK VALVE	1	-
5	537403501	FILTER	1	-
6	593806001	GUIDE BUSHING	2	-

Ref.	Article N.	Description	Qty	Kit
7	522620003	TANK CAP ASSY	1	-
9	589241101	GASKET	1	-
10	503578901	HOLDER	1	-
11	575616301	CHAIN GUIDE PLATE	1	-
12	526221801	SCREW CITXPANT	1	-
13	575841104	SCREW ITXSCM	6	-
14	537377902	CHAIN CATCHER	1	-
15	525824401	SCREW ITXSCM	2	-
16	595303003	SNAP LOCKING	3	-
17	525798103	SCREW ITXSCFT	2	-
18	534114101	CARBURETTOR AREA BASE	1	-
19	583098401	FIXING WASHER	1	-
20	525755202	SCREW ITXSCFM	4	-
21	581559201	BELLOWS	1	-
22	597909701	DAMPER *Mounting*	2	-
23	589340502	AIR NOZZLE	1	-
24	574353505	SCREW ITXSCM	1	-
29	578864701	GASKET KIT	1	-
32	590261002	SPIKE *Kit - Inner Std*	1	-
33	582179601	SEALING	1	-
34	589349001	SEALING	1	-
35	590261101	GROMMET	1	-
36	582157101	GROMMET	1	-
37	589527701	GROMMET	1	-
38	501515401	SUPPORT	1	-
1	577607401	CRANKSHAFT ASSY -	1	-
2	577572401	NEEDLE BEARING -	1	-
3	587293401	BALL BEARING -	2	-
4	582812601	RADIAL SEAL -	2	-
1	579798701	CYLINDER COVER -	1	-
1	590150305	CYLINDER ASSY *With instruction to download new Firmware*	1	-
2	547282401	PISTON ASSY	1	-

Ref.	Article N.	Description	Qty	Kit
		With instruction to download new Firmware		
3	576627401	PISTON RING *- up to s/n 572XPG; 20242704550, 572XP; 20242705666, Only for 576626706* *Piston assy*	2	-
3	529317601	PISTON RING *From s/n - 572XPG; 20242704551, 572XP; 20242705667, Only for 547282401* *Piston assy*	2	-
4	577572401	NEEDLE BEARING	1	-
5	737431200	SNAP RING	2	-
6	503552201	PLUG	1	-
7	584288701	DECOMPRESSION VALVE	1	-
8	503235111	SPARK PLUG	1	-
9	501811202	SCREW ITXSCM	4	-
10	589527901	SLEEVE	4	-
11	577239801	GASKET	1	-
12	578864701	GASKET KIT	1	-
1	578200701	FUEL TANK ASSY	1	-
2	501152901	TANK VENT ASSY	1	-
3	537208401	THROTTLE LOCKOUT	1	-
4	576162802	THROTTLE CABLE ASSY	1	-
5	544099901	SPRING	1	-
6	576956701	THROTTLE	1	-
7	720182520	PARALLEL PIN	1	-
8	501007601	SUPPORT	1	-
9	575010201	WEAR PROTECTION	1	-
10	523085501	DEFLECTION LIMITER	1	-
11	577062701	ANTIVIBRATION ELEMENT *Hard*	1	-
11	577062702	ANTIVIBRATION ELEMENT	1	-
12	503854103	ANTIVIBRATION ELEMENT *Hard*	1	-
12	503854104	ANTIVIBRATION ELEMENT	1	-
13	529578202	FUEL HOSE ASSY *With magnet*	1	-
14	503443201	FUEL FILTER *18-40 µm (Blue)*	1	-
14	503443205	FUEL FILTER *18-40 µm (Blue) Mega pack (100 pcs)*	1	-
15	522620003	TANK CAP ASSY	1	-
16	589241101	GASKET	1	-

Ref.	Article N.	Description	Qty	Kit
17	503578901	HOLDER	1	-
18	525887402	SCREW CITXPANT	1	-
19	537205601	COVER *H572 XP*	1	-
19	589698901	HANDLE INSERT *H572 XPG*	1	-
20	590567001	DECAL	1	-
1	579484302	FRONT HANDLE ASSY -	1	-
2	504064501	SCREW ITXPANM -	1	-
3	589699101	ANTIVIBRATION ELEMENT -	1	-
3	589699102	ANTIVIBRATION ELEMENT *Hard*	1	-
4	503226601	SQUARE NUT -	1	-
5	525798103	SCREW ITXSCFT -	3	-
6	575885703	SCREW ITXSCFM -	2	-
8	582654201	COVER -	1	-
10	537252501	CONTACT PLATE -	1	-
11	537088301	GROMMET -	1	-
12	590469101	PROTECTION -	1	-
1	579504003	FRONT HANDLE ASSY *Wrap*	1	-
2	579504002	FRONT HANDLE ASSY -	1	-
3	589699101	ANTIVIBRATION ELEMENT -	1	-
3	589699102	ANTIVIBRATION ELEMENT *Hard*	1	-
4	503226601	SQUARE NUT -	1	-
5	525798103	SCREW ITXSCFT -	3	-
6	575885703	SCREW ITXSCFM -	3	-

Ref.	Article N.	Description	Qty	Kit
8	582654201	COVER -	1	-
10	537252501	CONTACT PLATE -	1	-
12	525824902	SCREW ITXSCM -	1	-
13	537331007	CLUTCH COVER ASSY -	1	-
14	503220001	HEXAGON NUT -	1	-
15	589772101	SPIKE *Kit*	1	-
16	525887402	SCREW CITXPANT -	1	-
17	503922701	SPIKE -	1	-
18	537017201	SPIKE -	1	-
19	589771301	CHAIN CATCHER -	1	-
20	537024401	WEAR PROTECTION -	1	-
21	504064501	SCREW ITXPANM -	1	-
22	590469101	PROTECTION -	1	-
23	537088301	GROMMET -	1	-
1	579504001	FRONT HANDLE ASSY -	1	-
2	504064501	SCREW ITXPANM -	1	-
3	575015301	ANTIVIBRATION ELEMENT -	0	-
3	575015303	ANTIVIBRATION ELEMENT *Hard*	1	-
4	503226601	SQUARE NUT -	1	-
5	525798103	SCREW ITXSCFT -	3	-
6	575885703	SCREW ITXSCFM -	3	-
12	525824902	SCREW ITXSCM	2	-

Ref.	Article N.	Description	Qty	Kit
		-		
13	537331007	CLUTCH COVER ASSY -	1	-
14	503220001	HEXAGON NUT -	2	-
15	589772101	SPIKE *Kit*	1	-
16	525887402	SCREW CITXPANT -	1	-
17	503922701	SPIKE -	1	-
18	537017201	SPIKE -	1	-
19	589771301	CHAIN CATCHER -	1	-
20	537024401	WEAR PROTECTION -	1	-
1	579484303	FRONT HANDLE ASSY -	1	-
2	504064501	SCREW ITXPANM -	1	-
3	575015301	ANTIVIBRATION ELEMENT -	1	-
3	575015303	ANTIVIBRATION ELEMENT *Hard*	0	-
4	503226601	SQUARE NUT -	1	-
5	525798103	SCREW ITXSCFT -	3	-
6	575885703	SCREW ITXSCFM -	2	-
1	579484302	FRONT HANDLE ASSY -	1	-
2	504064501	SCREW ITXPANM -	1	-
3	589699101	ANTIVIBRATION ELEMENT -	1	-
3	589699102	ANTIVIBRATION ELEMENT *Hard*	1	-
4	503226601	SQUARE NUT -	1	-
5	525798103	SCREW ITXSCFT -	3	-

Ref.	Article N.	Description	Qty	Kit
6	575885703	SCREW ITXSCFM -	2	-
8	582654201	COVER -	1	-
10	537252501	CONTACT PLATE -	1	-
11	537088301	GROMMET -	1	-
12	590688101	GENERATOR STATOR -	1	-
13	526818102	SCREW ITXSCM -	2	-
14	590688301	THERMOSTAT ASSY -	1	-
16	588168601	FOIL ELEMENT -	1	-
17	575396402	DECAL -	1	-
18	576777202	FLYWHEEL ASSY -	1	-
19	503220401	NUT -	1	-
20	590281301	PAWL *Kit*	1	-
21	589698901	HANDLE INSERT -	1	-
22	526221801	SCREW CITXPANT -	1	-
24	577419006	INLET ELBOW *Heated*	1	-
25	731231401	HEXAGON NUT -	1	-
26	589378401	SEALING -	1	-
27	525619201	SEALING -	1	-
28	525619001	SEALING -	1	-
29	577536402	WIRING ASSY -	1	-
30	510017202	CHOKE CONTROL ASSY -	1	-
31	505156201	SCREW	1	-

Ref.	Article N.	Description	Qty	Kit
		-		
32	590469101	PROTECTION -	1	-
1	576777201	FLYWHEEL ASSY *H572 XP*	1	-
2	590281301	PAWL *Kit*	1	-
3	503220401	NUT -	1	-
4	588193102	IGNITION MODULE ASSY -	1	-
5	590298801	SPARK PLUG CAP -	1	-
6	579451801	WIRE HOLDER -	1	-
7	525824902	SCREW ITXSCM -	2	-
1	587217801	MUFFLER KIT -	1	-
2	585390001	SPARK ARRESTER -	1	-
3	724128759	SCREW CRPANM -	1	-
4	525825106	SCREW ITXSCM -	2	-
5	587351001	HEAT DEFLECTOR -	1	-
6	587350901	GASKET -	1	-
7	578864701	GASKET KIT -	1	-
8	525762503	SCREW ITXSCM -	2	-
1	582752008	CRANKCASE ASSY	1	-
1	575527604	STARTER HOUSING	1	-
2	598750301	SPRING CASSETTE ASSY	1	-
3	525887401	SCREW CITXPANT	2	-
4	531314801	STARTER PULLEY ASSY	1	-
5	576356601	SCREW ITXSCT	1	-
6	505305125	STARTER ROPE	1	-
7	537232501	STARTER HANDLE	1	-
8	525824501	SCREW CITXPANMO	4	-

Ref.	Article N.	Description	Qty	Kit
9	575525802	STARTER HOUSING	1	-
10	537283201	SLEEVE	1	-
11	575396401	DECAL *H572 XP*	1	-
12	575396402	DECAL *H572 XPG*	1	-
13	575525201	BAFFLE	1	-
1	503558513	TOOL -	1	-
2	501691701	COMBINATION WRENCH -	1	-
3	575880701	WRENCH -	1	-
4	583897101	DIAGNOSTIC TOOL KIT -	1	-
5	576183401	CABLE ASSY -	1	-
6	576952201	CABLE ASSY -	1	-
7	575527501	WINTER KIT -	1	-
8	576162601	WINTER COVER -	1	-
9	503217016	SCREW CCRPANT -	2	-
10	740420100	O-RING -	2	-
11	590261001	SPIKE *Outer, std*	1	-
12	575236501	SPIKE -	1	-
13	503222401	LOCK NUT -	2	-
14	525755202	SCREW ITXSCFM -	2	-
15	589772101	SPIKE -	1	-
16	589771301	CHAIN CATCHER -	1	-
17	537024401	WEAR PROTECTION -	1	-
18	537017201	SPIKE -	1	-

Ref.	Article N.	Description	Qty	Kit
19	503922701	SPIKE -	1	-
20	525887402	SCREW CITXPANT -	1	-
21	525824902	SCREW ITXSCM -	2	-
22	503220001	HEXAGON NUT -	2	-

STARTER

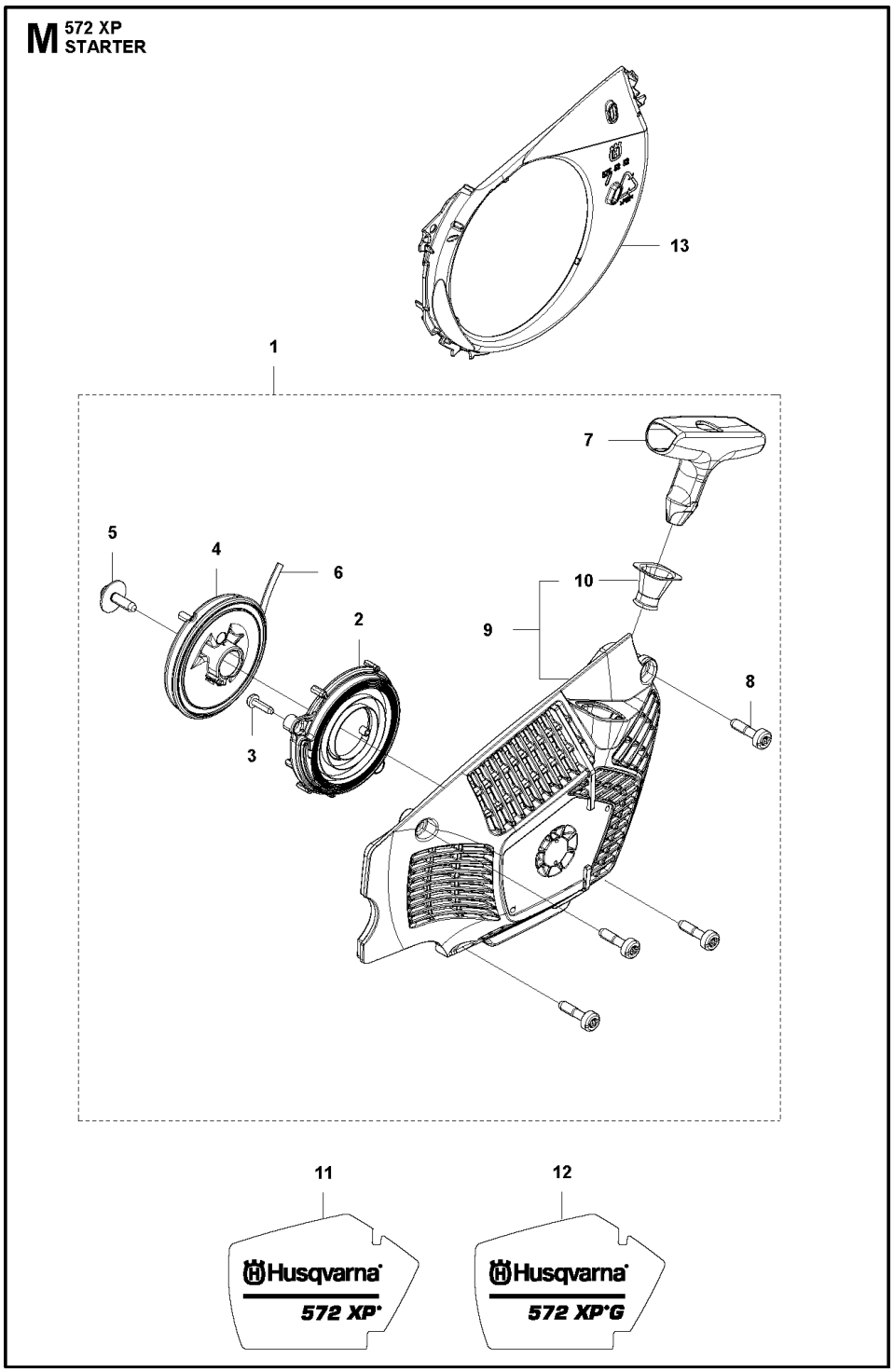

Ref.	Article N.	Description	Qty	Kit
1	596762303	AIR FILTER *Nylon Mesh - 64 Micron Rating - Black*	1	-
1	596762302	AIR FILTER *Nylon Mesh - 25 Micron Rating - Yellow*	1	-
1	596762301	AIR FILTER *Non-Woven - Clear*	1	-

Ref.	Article N.	Description	Qty	Kit
2	577419005	INLET ELBOW *Std*	1	-
2	577419006	INLET ELBOW *Heated*	1	-
3	731231401	HEXAGON NUT	1	-
4	525619201	SEALING	1	-
5	525619001	SEALING	1	-
6	577536402	WIRING ASSY	1	-
7	510017202	CHOKE CONTROL ASSY	1	-
8	505156201	SCREW	1	-
9	589378401	SEALING	1	-
10	523056801	FUEL HOSE	1	-
11	525344303	FUEL HOSE	1	-
12	581143101	SCREW ITXSCFM	2	-
13	525588101	SEALING	1	-
14	505165202	FLANGE	1	-
15	503226503	SQUARE NUT	2	-
16	501182001	BAFFLE	1	-
17	575235301	INLET PIPE *Std*	1	-
17	575235302	INLET PIPE *For extrem cold conditions.*	1	-
18	526818101	SCREW ITXSCM	4	-
19	591158301	CARBURETTOR KIT *C1M-140054E*	1	-
20	582179501	SEALING	1	-
21	590059501	SEALING	1	-
22	537213205	KNOB	1	-
23	589340701	CONTACT CLAMP	1	-
24	589340601	RETAINER	1	-
25	582025101	SUPPORT SLEEVE	1	-
26	503936601	PURGE	1	-
1	591158301	CARBURETTOR KIT *C1M-140054E*	1	-
2	522518901	GASKET KIT *GASKET KIT*	1	-
3	590191501	REPAIR KIT *Metering Kit*	1	-
4	590191601	CARBURETTOR *Throttle Lever Kit*	1	-

Ref.	Article N.	Description	Qty	Kit
6	537383401	SPRING -	1	-
7	522517901	ROD -	1	-
15	522545101	SCREW -	4	-
1	576139602	HAND GUARD -	1	-
2	590105301	SCREW KIT *KIT - Screws and Bushings*	1	-
3	590110201	CHAIN BRAKE -	1	-
4	590105602	KNEE JOINT -	1	-
5	503752202	BRAKE BAND ASSY -	1	-
6	574825601	COVER -	1	-
7	582213301	SCREW -	3	-
1	577603801	CLUTCH DRUM ASSY -	1	-
2	503432001	NEEDLE HOLDER -	1	-
3	501598002	RIM SPROCKET -	1	-
4	503752401	WASHER -	1	-
5	503272101	E-CLIP -	1	-
6	586798404	CLUTCH ASSY -	1	-
7	537360601	CLUTCH SPRING -	3	-
8	582270108	PUMP PINION -	1	-
9	589028403	OIL PUMP ASSY -	1	-
10	590119703	PUMP PISTON -	1	-
11	590120101	OIL PUMP -	1	-
12	576987401	OIL PRESSURE HOSE	1	-

Ref.	Article N.	Description	Qty	Kit
		-		
13	526818102	SCREW ITXSCM -	2	-
14	588404702	OIL HOSE -	1	-
15	501544102	OIL SCREEN -	1	-
1	594907802	CLUTCH COVER ASSY *Wrap*	1	-
1	599591701	CLUTCH COVER ASSY	1	-
2	537172604	CLUTCH COVER *Wrap*	1	-
2	575236303	CLUTCH COVER	1	-
3	537174101	CHIP GUARD *Wrap*	1	-
3	575236401	CHIP GUARD	1	-
4	526221801	SCREW CITXPANT	3	-
4	525887402	SCREW CITXPANT *Wrap*	4	-
5	501517201	CHAIN GUIDE	1	-
5	537043401	CHAIN GUIDE *Wrap*	1	-
6	537016801	COVER *Wrap*	1	-
6	576424301	COVER	1	-
7	503220001	HEXAGON NUT *Wrap*	2	-
7	505197301	NUT *-up to s/n 224400900*	2	-
9	590104701	CHAIN TENSIONER KIT	1	-
10	590104801	WORM SCREW	1	-
11	590105101	WORM WHEEL	1	-
12	531012901	CHAIN BRAKE *From s/n 224400901-, 2pcs Unlosable nuts and 2pcs Snap rings*	1	-
13	531222801	SNAP RING	1	-
1	590195605	CRANKCASE ASSY	1	-
2	537051301	BAR BOLT	2	-
3	537203001	PIN KNEE-JOINT	1	-
4	530026119	CHECK VALVE	1	-
5	537403501	FILTER	1	-
6	593806001	GUIDE BUSHING	2	-

Ref.	Article N.	Description	Qty	Kit
7	522620003	TANK CAP ASSY	1	-
9	589241101	GASKET	1	-
10	503578901	HOLDER	1	-
11	575616301	CHAIN GUIDE PLATE	1	-
12	526221801	SCREW CITXPANT	1	-
13	575841104	SCREW ITXSCM	6	-
14	537377902	CHAIN CATCHER	1	-
15	525824401	SCREW ITXSCM	2	-
16	595303003	SNAP LOCKING	3	-
17	525798103	SCREW ITXSCFT	2	-
18	534114101	CARBURETTOR AREA BASE	1	-
19	583098401	FIXING WASHER	1	-
20	525755202	SCREW ITXSCFM	4	-
21	581559201	BELLOWS	1	-
22	597909701	DAMPER *Mounting*	2	-
23	589340502	AIR NOZZLE	1	-
24	574353505	SCREW ITXSCM	1	-
29	578864701	GASKET KIT	1	-
32	590261002	SPIKE *Kit - Inner Std*	1	-
33	582179601	SEALING	1	-
34	589349001	SEALING	1	-
35	590261101	GROMMET	1	-
36	582157101	GROMMET	1	-
37	589527701	GROMMET	1	-
38	501515401	SUPPORT	1	-
1	577607401	CRANKSHAFT ASSY -	1	-
2	577572401	NEEDLE BEARING -	1	-
3	587293401	BALL BEARING -	2	-
4	582812601	RADIAL SEAL -	2	-
1	579798701	CYLINDER COVER -	1	-
1	590150305	CYLINDER ASSY *With instruction to download new Firmware*	1	-
2	547282401	PISTON ASSY	1	-

Ref.	Article N.	Description	Qty	Kit
		With instruction to download new Firmware		
3	576627401	PISTON RING *- up to s/n 572XPG; 20242704550, 572XP; 20242705666, Only for 576626706* *Piston assy*	2	-
3	529317601	PISTON RING *From s/n - 572XPG; 20242704551, 572XP; 20242705667, Only for 547282401* *Piston assy*	2	-
4	577572401	NEEDLE BEARING	1	-
5	737431200	SNAP RING	2	-
6	503552201	PLUG	1	-
7	584288701	DECOMPRESSION VALVE	1	-
8	503235111	SPARK PLUG	1	-
9	501811202	SCREW ITXSCM	4	-
10	589527901	SLEEVE	4	-
11	577239801	GASKET	1	-
12	578864701	GASKET KIT	1	-
1	578200701	FUEL TANK ASSY	1	-
2	501152901	TANK VENT ASSY	1	-
3	537208401	THROTTLE LOCKOUT	1	-
4	576162802	THROTTLE CABLE ASSY	1	-
5	544099901	SPRING	1	-
6	576956701	THROTTLE	1	-
7	720182520	PARALLEL PIN	1	-
8	501007601	SUPPORT	1	-
9	575010201	WEAR PROTECTION	1	-
10	523085501	DEFLECTION LIMITER	1	-
11	577062701	ANTIVIBRATION ELEMENT *Hard*	1	-
11	577062702	ANTIVIBRATION ELEMENT	1	-
12	503854103	ANTIVIBRATION ELEMENT *Hard*	1	-
12	503854104	ANTIVIBRATION ELEMENT	1	-
13	529578202	FUEL HOSE ASSY *With magnet*	1	-
14	503443201	FUEL FILTER *18-40 µm (Blue)*	1	-
14	503443205	FUEL FILTER *18-40 µm (Blue) Mega pack (100 pcs)*	1	-
15	522620003	TANK CAP ASSY	1	-
16	589241101	GASKET	1	-

Ref.	Article N.	Description	Qty	Kit
17	503578901	HOLDER	1	-
18	525887402	SCREW CITXPANT	1	-
19	537205601	COVER *H572 XP*	1	-
19	589698901	HANDLE INSERT *H572 XPG*	1	-
20	590567001	DECAL	1	-
1	579484302	FRONT HANDLE ASSY -	1	-
2	504064501	SCREW ITXPANM -	1	-
3	589699101	ANTIVIBRATION ELEMENT -	1	-
3	589699102	ANTIVIBRATION ELEMENT *Hard*	1	-
4	503226601	SQUARE NUT -	1	-
5	525798103	SCREW ITXSCFT -	3	-
6	575885703	SCREW ITXSCFM -	2	-
8	582654201	COVER -	1	-
10	537252501	CONTACT PLATE -	1	-
11	537088301	GROMMET -	1	-
12	590469101	PROTECTION -	1	-
1	579504003	FRONT HANDLE ASSY *Wrap*	1	-
2	579504002	FRONT HANDLE ASSY -	1	-
3	589699101	ANTIVIBRATION ELEMENT -	1	-
3	589699102	ANTIVIBRATION ELEMENT *Hard*	1	-
4	503226601	SQUARE NUT -	1	-
5	525798103	SCREW ITXSCFT -	3	-
6	575885703	SCREW ITXSCFM -	3	-

Ref.	Article N.	Description	Qty	Kit
8	582654201	COVER -	1	-
10	537252501	CONTACT PLATE -	1	-
12	525824902	SCREW ITXSCM -	1	-
13	537331007	CLUTCH COVER ASSY -	1	-
14	503220001	HEXAGON NUT -	1	-
15	589772101	SPIKE *Kit*	1	-
16	525887402	SCREW CITXPANT -	1	-
17	503922701	SPIKE -	1	-
18	537017201	SPIKE -	1	-
19	589771301	CHAIN CATCHER -	1	-
20	537024401	WEAR PROTECTION -	1	-
21	504064501	SCREW ITXPANM -	1	-
22	590469101	PROTECTION -	1	-
23	537088301	GROMMET -	1	-
1	579504001	FRONT HANDLE ASSY -	1	-
2	504064501	SCREW ITXPANM -	1	-
3	575015301	ANTIVIBRATION ELEMENT -	0	-
3	575015303	ANTIVIBRATION ELEMENT *Hard*	1	-
4	503226601	SQUARE NUT -	1	-
5	525798103	SCREW ITXSCFT -	3	-
6	575885703	SCREW ITXSCFM -	3	-
12	525824902	SCREW ITXSCM	2	-

Ref.	Article N.	Description	Qty	Kit
		-		
13	537331007	CLUTCH COVER ASSY -	1	-
14	503220001	HEXAGON NUT -	2	-
15	589772101	SPIKE *Kit*	1	-
16	525887402	SCREW CITXPANT -	1	-
17	503922701	SPIKE -	1	-
18	537017201	SPIKE -	1	-
19	589771301	CHAIN CATCHER -	1	-
20	537024401	WEAR PROTECTION -	1	-
1	579484303	FRONT HANDLE ASSY -	1	-
2	504064501	SCREW ITXPANM -	1	-
3	575015301	ANTIVIBRATION ELEMENT -	1	-
3	575015303	ANTIVIBRATION ELEMENT *Hard*	0	-
4	503226601	SQUARE NUT -	1	-
5	525798103	SCREW ITXSCFT -	3	-
6	575885703	SCREW ITXSCFM -	2	-
1	579484302	FRONT HANDLE ASSY -	1	-
2	504064501	SCREW ITXPANM -	1	-
3	589699101	ANTIVIBRATION ELEMENT -	1	-
3	589699102	ANTIVIBRATION ELEMENT *Hard*	1	-
4	503226601	SQUARE NUT -	1	-
5	525798103	SCREW ITXSCFT -	3	-

Ref.	Article N.	Description	Qty	Kit
6	575885703	SCREW ITXSCFM -	2	-
8	582654201	COVER -	1	-
10	537252501	CONTACT PLATE -	1	-
11	537088301	GROMMET -	1	-
12	590688101	GENERATOR STATOR -	1	-
13	526818102	SCREW ITXSCM -	2	-
14	590688301	THERMOSTAT ASSY -	1	-
16	588168601	FOIL ELEMENT -	1	-
17	575396402	DECAL -	1	-
18	576777202	FLYWHEEL ASSY -	1	-
19	503220401	NUT -	1	-
20	590281301	PAWL *Kit*	1	-
21	589698901	HANDLE INSERT -	1	-
22	526221801	SCREW CITXPANT -	1	-
24	577419006	INLET ELBOW *Heated*	1	-
25	731231401	HEXAGON NUT -	1	-
26	589378401	SEALING -	1	-
27	525619201	SEALING -	1	-
28	525619001	SEALING -	1	-
29	577536402	WIRING ASSY -	1	-
30	510017202	CHOKE CONTROL ASSY -	1	-
31	505156201	SCREW	1	-

Ref.	Article N.	Description	Qty	Kit
		-		
32	590469101	PROTECTION -	1	-
1	576777201	FLYWHEEL ASSY *H572 XP*	1	-
2	590281301	PAWL *Kit*	1	-
3	503220401	NUT -	1	-
4	588193102	IGNITION MODULE ASSY -	1	-
5	590298801	SPARK PLUG CAP -	1	-
6	579451801	WIRE HOLDER -	1	-
7	525824902	SCREW ITXSCM -	2	-
1	587217801	MUFFLER KIT -	1	-
2	585390001	SPARK ARRESTER -	1	-
3	724128759	SCREW CRPANM -	1	-
4	525825106	SCREW ITXSCM -	2	-
5	587351001	HEAT DEFLECTOR -	1	-
6	587350901	GASKET -	1	-
7	578864701	GASKET KIT -	1	-
8	525762503	SCREW ITXSCM -	2	-
1	582752008	CRANKCASE ASSY	1	-
1	575527604	STARTER HOUSING	1	-
2	598750301	SPRING CASSETTE ASSY	1	-
3	525887401	SCREW CITXPANT	2	-
4	531314801	STARTER PULLEY ASSY	1	-
5	576356601	SCREW ITXSCT	1	-
6	505305125	STARTER ROPE	1	-
7	537232501	STARTER HANDLE	1	-
8	525824501	SCREW CITXPANMO	4	-

Ref.	Article N.	Description	Qty	Kit
9	575525802	STARTER HOUSING	1	-
10	537283201	SLEEVE	1	-
11	575396401	DECAL *H572 XP*	1	-
12	575396402	DECAL *H572 XPG*	1	-
13	575525201	BAFFLE	1	-
1	503558513	TOOL -	1	-
2	501691701	COMBINATION WRENCH -	1	-
3	575880701	WRENCH -	1	-
4	583897101	DIAGNOSTIC TOOL KIT -	1	-
5	576183401	CABLE ASSY -	1	-
6	576952201	CABLE ASSY -	1	-
7	575527501	WINTER KIT -	1	-
8	576162601	WINTER COVER -	1	-
9	503217016	SCREW CCRPANT -	2	-
10	740420100	O-RING -	2	-
11	590261001	SPIKE *Outer, std*	1	-
12	575236501	SPIKE -	1	-
13	503222401	LOCK NUT -	2	-
14	525755202	SCREW ITXSCFM -	2	-
15	589772101	SPIKE -	1	-
16	589771301	CHAIN CATCHER -	1	-
17	537024401	WEAR PROTECTION -	1	-
18	537017201	SPIKE -	1	-

Ref.	Article N.	Description	Qty	Kit
19	503922701	SPIKE -	1	-
20	525887402	SCREW CITXPANT -	1	-
21	525824902	SCREW ITXSCM -	2	-
22	503220001	HEXAGON NUT -	2	-

ACCESSORIES

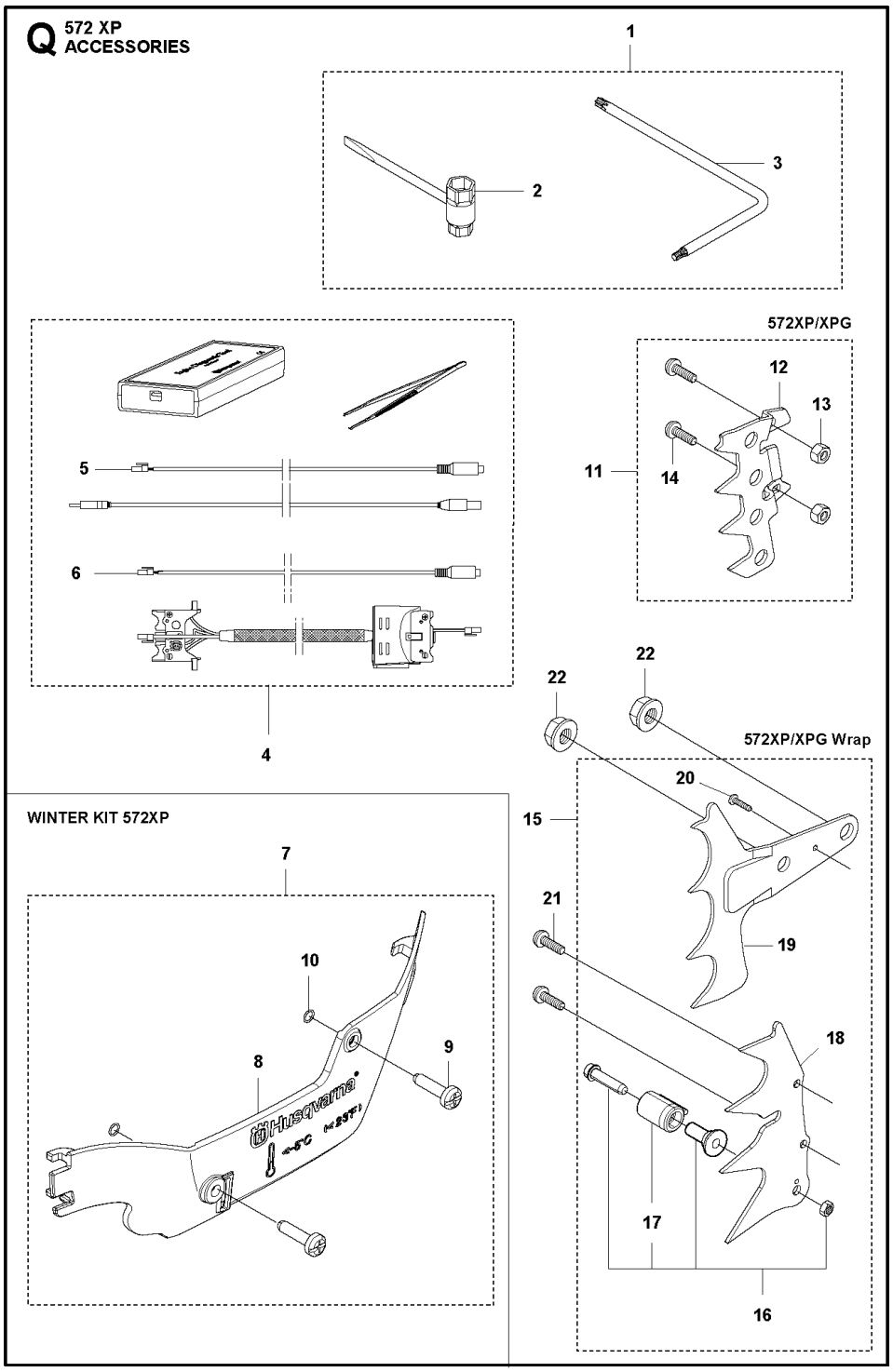

Ref.	Article N.	Description	Qty	Kit
1	596762303	AIR FILTER *Nylon Mesh - 64 Micron Rating - Black*	1	-
1	596762302	AIR FILTER *Nylon Mesh - 25 Micron Rating - Yellow*	1	-
1	596762301	AIR FILTER *Non-Woven - Clear*	1	-

Ref.	Article N.	Description	Qty	Kit
2	577419005	INLET ELBOW *Std*	1	-
2	577419006	INLET ELBOW *Heated*	1	-
3	731231401	HEXAGON NUT	1	-
4	525619201	SEALING	1	-
5	525619001	SEALING	1	-
6	577536402	WIRING ASSY	1	-
7	510017202	CHOKE CONTROL ASSY	1	-
8	505156201	SCREW	1	-
9	589378401	SEALING	1	-
10	523056801	FUEL HOSE	1	-
11	525344303	FUEL HOSE	1	-
12	581143101	SCREW ITXSCFM	2	-
13	525588101	SEALING	1	-
14	505165202	FLANGE	1	-
15	503226503	SQUARE NUT	2	-
16	501182001	BAFFLE	1	-
17	575235301	INLET PIPE *Std*	1	-
17	575235302	INLET PIPE *For extrem cold conditions.*	1	-
18	526818101	SCREW ITXSCM	4	-
19	591158301	CARBURETTOR KIT *C1M-140054E*	1	-
20	582179501	SEALING	1	-
21	590059501	SEALING	1	-
22	537213205	KNOB	1	-
23	589340701	CONTACT CLAMP	1	-
24	589340601	RETAINER	1	-
25	582025101	SUPPORT SLEEVE	1	-
26	503936601	PURGE	1	-
1	591158301	CARBURETTOR KIT *C1M-140054E*	1	-
2	522518901	GASKET KIT *GASKET KIT*	1	-
3	590191501	REPAIR KIT *Metering Kit*	1	-
4	590191601	CARBURETTOR *Throttle Lever Kit*	1	-

Ref.	Article N.	Description	Qty	Kit
6	537383401	SPRING -	1	-
7	522517901	ROD -	1	-
15	522545101	SCREW -	4	-
1	576139602	HAND GUARD -	1	-
2	590105301	SCREW KIT *KIT - Screws and Bushings*	1	-
3	590110201	CHAIN BRAKE -	1	-
4	590105602	KNEE JOINT -	1	-
5	503752202	BRAKE BAND ASSY -	1	-
6	574825601	COVER -	1	-
7	582213301	SCREW -	3	-
1	577603801	CLUTCH DRUM ASSY -	1	-
2	503432001	NEEDLE HOLDER -	1	-
3	501598002	RIM SPROCKET -	1	-
4	503752401	WASHER -	1	-
5	503272101	E-CLIP -	1	-
6	586798404	CLUTCH ASSY -	1	-
7	537360601	CLUTCH SPRING -	3	-
8	582270108	PUMP PINION -	1	-
9	589028403	OIL PUMP ASSY -	1	-
10	590119703	PUMP PISTON -	1	-
11	590120101	OIL PUMP -	1	-
12	576987401	OIL PRESSURE HOSE	1	-

Ref.	Article N.	Description	Qty	Kit
		-		
13	526818102	SCREW ITXSCM -	2	-
14	588404702	OIL HOSE -	1	-
15	501544102	OIL SCREEN -	1	-
1	594907802	CLUTCH COVER ASSY *Wrap*	1	-
1	599591701	CLUTCH COVER ASSY	1	-
2	537172604	CLUTCH COVER *Wrap*	1	-
2	575236303	CLUTCH COVER	1	-
3	537174101	CHIP GUARD *Wrap*	1	-
3	575236401	CHIP GUARD	1	-
4	526221801	SCREW CITXPANT	3	-
4	525887402	SCREW CITXPANT *Wrap*	4	-
5	501517201	CHAIN GUIDE	1	-
5	537043401	CHAIN GUIDE *Wrap*	1	-
6	537016801	COVER *Wrap*	1	-
6	576424301	COVER	1	-
7	503220001	HEXAGON NUT *Wrap*	2	-
7	505197301	NUT *-up to s/n 224400900*	2	-
9	590104701	CHAIN TENSIONER KIT	1	-
10	590104801	WORM SCREW	1	-
11	590105101	WORM WHEEL	1	-
12	531012901	CHAIN BRAKE *From s/n 224400901-, 2pcs Unlosable nuts and 2pcs Snap rings*	1	-
13	531222801	SNAP RING	1	-
1	590195605	CRANKCASE ASSY	1	-
2	537051301	BAR BOLT	2	-
3	537203001	PIN KNEE-JOINT	1	-
4	530026119	CHECK VALVE	1	-
5	537403501	FILTER	1	-
6	593806001	GUIDE BUSHING	2	-

Ref.	Article N.	Description	Qty	Kit
7	522620003	TANK CAP ASSY	1	-
9	589241101	GASKET	1	-
10	503578901	HOLDER	1	-
11	575616301	CHAIN GUIDE PLATE	1	-
12	526221801	SCREW CITXPANT	1	-
13	575841104	SCREW ITXSCM	6	-
14	537377902	CHAIN CATCHER	1	-
15	525824401	SCREW ITXSCM	2	-
16	595303003	SNAP LOCKING	3	-
17	525798103	SCREW ITXSCFT	2	-
18	534114101	CARBURETTOR AREA BASE	1	-
19	583098401	FIXING WASHER	1	-
20	525755202	SCREW ITXSCFM	4	-
21	581559201	BELLOWS	1	-
22	597909701	DAMPER *Mounting*	2	-
23	589340502	AIR NOZZLE	1	-
24	574353505	SCREW ITXSCM	1	-
29	578864701	GASKET KIT	1	-
32	590261002	SPIKE *Kit - Inner Std*	1	-
33	582179601	SEALING	1	-
34	589349001	SEALING	1	-
35	590261101	GROMMET	1	-
36	582157101	GROMMET	1	-
37	589527701	GROMMET	1	-
38	501515401	SUPPORT	1	-
1	577607401	CRANKSHAFT ASSY -	1	-
2	577572401	NEEDLE BEARING -	1	-
3	587293401	BALL BEARING -	2	-
4	582812601	RADIAL SEAL -	2	-
1	579798701	CYLINDER COVER -	1	-
1	590150305	CYLINDER ASSY *With instruction to download new Firmware*	1	-
2	547282401	PISTON ASSY	1	-

Ref.	Article N.	Description	Qty	Kit
		With instruction to download new Firmware		
3	576627401	PISTON RING *- up to s/n 572XPG; 20242704550, 572XP; 20242705666, Only for 576626706* *Piston assy*	2	-
3	529317601	PISTON RING *From s/n - 572XPG; 20242704551, 572XP; 20242705667, Only for 547282401* *Piston assy*	2	-
4	577572401	NEEDLE BEARING	1	-
5	737431200	SNAP RING	2	-
6	503552201	PLUG	1	-
7	584288701	DECOMPRESSION VALVE	1	-
8	503235111	SPARK PLUG	1	-
9	501811202	SCREW ITXSCM	4	-
10	589527901	SLEEVE	4	-
11	577239801	GASKET	1	-
12	578864701	GASKET KIT	1	-
1	578200701	FUEL TANK ASSY	1	-
2	501152901	TANK VENT ASSY	1	-
3	537208401	THROTTLE LOCKOUT	1	-
4	576162802	THROTTLE CABLE ASSY	1	-
5	544099901	SPRING	1	-
6	576956701	THROTTLE	1	-
7	720182520	PARALLEL PIN	1	-
8	501007601	SUPPORT	1	-
9	575010201	WEAR PROTECTION	1	-
10	523085501	DEFLECTION LIMITER	1	-
11	577062701	ANTIVIBRATION ELEMENT *Hard*	1	-
11	577062702	ANTIVIBRATION ELEMENT	1	-
12	503854103	ANTIVIBRATION ELEMENT *Hard*	1	-
12	503854104	ANTIVIBRATION ELEMENT	1	-
13	529578202	FUEL HOSE ASSY *With magnet*	1	-
14	503443201	FUEL FILTER *18-40 µm (Blue)*	1	-
14	503443205	FUEL FILTER *18-40 µm (Blue) Mega pack (100 pcs)*	1	-
15	522620003	TANK CAP ASSY	1	-
16	589241101	GASKET	1	-

Ref.	Article N.	Description	Qty	Kit
17	503578901	HOLDER	1	-
18	525887402	SCREW CITXPANT	1	-
19	537205601	COVER *H572 XP*	1	-
19	589698901	HANDLE INSERT *H572 XPG*	1	-
20	590567001	DECAL	1	-
1	579484302	FRONT HANDLE ASSY -	1	-
2	504064501	SCREW ITXPANM -	1	-
3	589699101	ANTIVIBRATION ELEMENT -	1	-
3	589699102	ANTIVIBRATION ELEMENT *Hard*	1	-
4	503226601	SQUARE NUT -	1	-
5	525798103	SCREW ITXSCFT -	3	-
6	575885703	SCREW ITXSCFM -	2	-
8	582654201	COVER -	1	-
10	537252501	CONTACT PLATE -	1	-
11	537088301	GROMMET -	1	-
12	590469101	PROTECTION -	1	-
1	579504003	FRONT HANDLE ASSY *Wrap*	1	-
2	579504002	FRONT HANDLE ASSY -	1	-
3	589699101	ANTIVIBRATION ELEMENT -	1	-
3	589699102	ANTIVIBRATION ELEMENT *Hard*	1	-
4	503226601	SQUARE NUT -	1	-
5	525798103	SCREW ITXSCFT -	3	-
6	575885703	SCREW ITXSCFM -	3	-

Ref.	Article N.	Description	Qty	Kit
8	582654201	COVER -	1	-
10	537252501	CONTACT PLATE -	1	-
12	525824902	SCREW ITXSCM -	1	-
13	537331007	CLUTCH COVER ASSY -	1	-
14	503220001	HEXAGON NUT -	1	-
15	589772101	SPIKE *Kit*	1	-
16	525887402	SCREW CITXPANT -	1	-
17	503922701	SPIKE -	1	-
18	537017201	SPIKE -	1	-
19	589771301	CHAIN CATCHER -	1	-
20	537024401	WEAR PROTECTION -	1	-
21	504064501	SCREW ITXPANM -	1	-
22	590469101	PROTECTION -	1	-
23	537088301	GROMMET -	1	-
1	579504001	FRONT HANDLE ASSY -	1	-
2	504064501	SCREW ITXPANM -	1	-
3	575015301	ANTIVIBRATION ELEMENT -	0	-
3	575015303	ANTIVIBRATION ELEMENT *Hard*	1	-
4	503226601	SQUARE NUT -	1	-
5	525798103	SCREW ITXSCFT -	3	-
6	575885703	SCREW ITXSCFM -	3	-
12	525824902	SCREW ITXSCM	2	-

Ref.	Article N.	Description	Qty	Kit
		-		
13	537331007	CLUTCH COVER ASSY -	1	-
14	503220001	HEXAGON NUT -	2	-
15	589772101	SPIKE *Kit*	1	-
16	525887402	SCREW CITXPANT -	1	-
17	503922701	SPIKE -	1	-
18	537017201	SPIKE -	1	-
19	589771301	CHAIN CATCHER -	1	-
20	537024401	WEAR PROTECTION -	1	-
1	579484303	FRONT HANDLE ASSY -	1	-
2	504064501	SCREW ITXPANM -	1	-
3	575015301	ANTIVIBRATION ELEMENT -	1	-
3	575015303	ANTIVIBRATION ELEMENT *Hard*	0	-
4	503226601	SQUARE NUT -	1	-
5	525798103	SCREW ITXSCFT -	3	-
6	575885703	SCREW ITXSCFM -	2	-
1	579484302	FRONT HANDLE ASSY -	1	-
2	504064501	SCREW ITXPANM -	1	-
3	589699101	ANTIVIBRATION ELEMENT -	1	-
3	589699102	ANTIVIBRATION ELEMENT *Hard*	1	-
4	503226601	SQUARE NUT -	1	-
5	525798103	SCREW ITXSCFT -	3	-

Ref.	Article N.	Description	Qty	Kit
6	575885703	SCREW ITXSCFM -	2	-
8	582654201	COVER -	1	-
10	537252501	CONTACT PLATE -	1	-
11	537088301	GROMMET -	1	-
12	590688101	GENERATOR STATOR -	1	-
13	526818102	SCREW ITXSCM -	2	-
14	590688301	THERMOSTAT ASSY -	1	-
16	588168601	FOIL ELEMENT -	1	-
17	575396402	DECAL -	1	-
18	576777202	FLYWHEEL ASSY -	1	-
19	503220401	NUT -	1	-
20	590281301	PAWL *Kit*	1	-
21	589698901	HANDLE INSERT -	1	-
22	526221801	SCREW CITXPANT -	1	-
24	577419006	INLET ELBOW *Heated*	1	-
25	731231401	HEXAGON NUT -	1	-
26	589378401	SEALING -	1	-
27	525619201	SEALING -	1	-
28	525619001	SEALING -	1	-
29	577536402	WIRING ASSY -	1	-
30	510017202	CHOKE CONTROL ASSY -	1	-
31	505156201	SCREW	1	-

Ref.	Article N.	Description	Qty	Kit
		-		
32	590469101	PROTECTION -	1	-
1	576777201	FLYWHEEL ASSY *H572 XP*	1	-
2	590281301	PAWL *Kit*	1	-
3	503220401	NUT -	1	-
4	588193102	IGNITION MODULE ASSY -	1	-
5	590298801	SPARK PLUG CAP -	1	-
6	579451801	WIRE HOLDER -	1	-
7	525824902	SCREW ITXSCM -	2	-
1	587217801	MUFFLER KIT -	1	-
2	585390001	SPARK ARRESTER -	1	-
3	724128759	SCREW CRPANM -	1	-
4	525825106	SCREW ITXSCM -	2	-
5	587351001	HEAT DEFLECTOR -	1	-
6	587350901	GASKET -	1	-
7	578864701	GASKET KIT -	1	-
8	525762503	SCREW ITXSCM -	2	-
1	582752008	CRANKCASE ASSY	1	-
1	575527604	STARTER HOUSING	1	-
2	598750301	SPRING CASSETTE ASSY	1	-
3	525887401	SCREW CITXPANT	2	-
4	531314801	STARTER PULLEY ASSY	1	-
5	576356601	SCREW ITXSCT	1	-
6	505305125	STARTER ROPE	1	-
7	537232501	STARTER HANDLE	1	-
8	525824501	SCREW CITXPANMO	4	-

Ref.	Article N.	Description	Qty	Kit
9	575525802	STARTER HOUSING	1	-
10	537283201	SLEEVE	1	-
11	575396401	DECAL *H572 XP*	1	-
12	575396402	DECAL *H572 XPG*	1	-
13	575525201	BAFFLE	1	-
1	503558513	TOOL -	1	-
2	501691701	COMBINATION WRENCH -	1	-
3	575880701	WRENCH -	1	-
4	583897101	DIAGNOSTIC TOOL KIT -	1	-
5	576183401	CABLE ASSY -	1	-
6	576952201	CABLE ASSY -	1	-
7	575527501	WINTER KIT -	1	-
8	576162601	WINTER COVER -	1	-
9	503217016	SCREW CCRPANT -	2	-
10	740420100	O-RING -	2	-
11	590261001	SPIKE *Outer, std*	1	-
12	575236501	SPIKE -	1	-
13	503222401	LOCK NUT -	2	-
14	525755202	SCREW ITXSCFM -	2	-
15	589772101	SPIKE -	1	-
16	589771301	CHAIN CATCHER -	1	-
17	537024401	WEAR PROTECTION -	1	-
18	537017201	SPIKE -	1	-

Ref.	Article N.	Description	Qty	Kit
19	503922701	SPIKE -	1	-
20	525887402	SCREW CITXPANT -	1	-
21	525824902	SCREW ITXSCM -	2	-
22	503220001	HEXAGON NUT -	2	-