Product Catalog: Husqvarna/TS 354XD

CHASSIS \/ FRAME

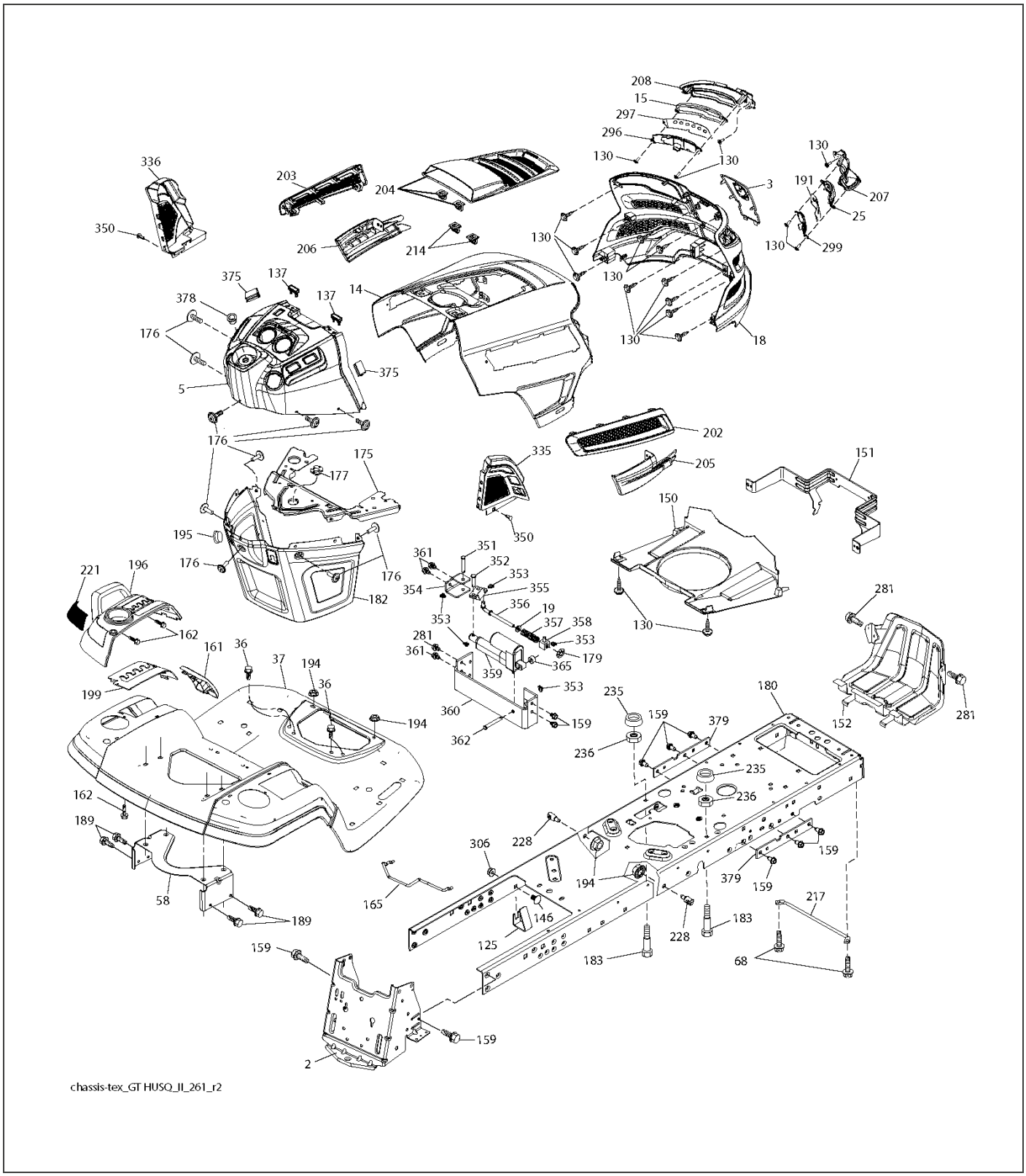

Ref.	Article N.	Description	Qty	Kit
2	580434401	DRAWBAR -	1	-
3	532444481	LOGOTYPE -	1	-
5	590748817	DASHBOARD *For 96043029000*	1	-
5	590748819	DASHBOARD *For 96041041900, 96043030500, 96043032100*	1	-
5	590748822	DASHBOARD *For 96043024500*	1	-
14	532441177	HOOD -	1	-
15	585420301	LENS *LH*	1	-
18	597247301	GRILLE *For 96043032100 and 96043030500*	1	-
18	587523401	GRILLE -	1	-
19	596133201	WASHER *For 96043030500, 96043032100, 96043029000*	1	-
19	596134901	WASHER *For 96043024500, 96041041900, 96043029000*	1	-
25	585420201	LENS *RH*	1	-
36	817060512	SCREW -	1	-
37	532441208	FENDER *For 96043024500, 96043030500, 96043032100*	1	-
37	590534702	FENDER *For 96041041900, 96043029000*	1	-
58	532194314	BRACKET -	1	-
68	596030701	SCREW *For 96043030500, 96043032100, 96043029000*	1	-
68	539990858	SCREW *For 96043024500, 96041041900, 96043029000*	1	-
105	532431882	GUARD -	1	-
125	581684801	CLIP -	1	-
130	532416358	SCREW *For 96043024500, 96041041900, 96043029000*	1	-
130	596321701	SCREW	1	-

Ref.	Article N.	Description	Qty	Kit
		For 96043030500, 96043032100, 96043029000		
137	532407590	BUMPER -	1	-
146	581857901	BOLT -	1	-
150	532439774	AIR DUCT -	1	-
151	532436670	BRACKET -	1	-
152	532439870	SHIELD -	1	-
159	817000612	SCREW -	1	-
161	532439929	CONSOLE *For 96043032100*	1	-
161	532401801	CONSOLE *For 96043024500, 96043029000, 96043030500*	1	-
162	596134101	SCREW *For 96043030500, 96043032100, 96043029000*	1	-
162	532142432	SCREW *For 96043024500, 96041041900, 96043029000*	1	-
165	532194330	SUPPORT -	1	-
175	590607702	CROSS MEMBER -	1	-
176	532400776	SCREW -	1	-
177	532195228	BUSHING -	1	-
179	532168937	WASHER -	1	-
180	593346301	CHASSIS -	1	-
182	532406859	DASH -	1	-
183	595305701	SCREW *For 96043030500, 96043032100, 96043029000*	1	-
183	874520520	BOLT *For 96043024500, 96041041900, 96043029000*	1	-
189	817000512	SCREW -	1	-
191	586182801	REFLECTOR -	1	-

Ref.	Article N.	Description	Qty	Kit
194	596135701	LOCK NUT *For 96043030500, 96043032100, 96043029000*	1	-
194	873900500	NUT *For 96043024500, 96041041900, 96043029000*	1	-
195	532404137	PLUG *For 96043024500, 96041041900*	1	-
196	532439674	CONSOLE *For 96043024500, 96041041900, 96043029000, 96043030500*	1	-
196	532439716	CONSOLE *For 96043032100*	1	-
199	532198259	PLATE -	1	-
202	532439728	COVER *RH*	1	-
203	532439727	COVER *LH*	1	-
204	587485801	VENT -	1	-
205	532439730	TRIM *RH*	1	-
206	532439729	TRIM *LH*	1	-
207	585420002	BEZEL *RH*	1	-
208	585420102	BEZEL *LH*	1	-
214	532199145	CLIP -	1	-
217	532409167	ROD -	1	-
221	532198909	LENS *LH*	1	-
228	593824001	STUD *For 96043029000, 96043032100*	1	-
228	532195161	STUD -	1	-
235	532406129	SPACER *For 96043024500, 96041041900, 96043029000*	1	-
235	596564201	SPACER *For 96043030500, 96043032100, 96043029000*	1	-
236	873930500	NUT -	1	-
281	817000616	SCREW	1	-

Ref.	Article N.	Description	Qty	Kit
		-		
296	585420501	LIGHT -	1	-
297	586182901	REFLECTOR -	1	-
299	585420401	LIGHT -	1	-
306	873900600	NUT -	1	-
335	532448204	COVER -	1	-
336	532445309	COVER -	1	-
350	532445143	CLIP -	1	-
351	532421734	PEN -	1	-
352	532448634	CLEVIS PIN -	1	-
353	532178062	CLIP -	1	-
354	532448619	SUPPORT -	1	-
354	593196901	SUPPORT *For 96043029000, 96043030500, 96043029000, 96043032100*	1	-
355	532448636	BELLCRANK -	1	-
356	532448693	LINK -	1	-
357	532448684	COMPRESSION SPRING -	1	-
358	580366601	STUD *For 96043024500, 96041041900, 96043029000*	1	-
358	599128101	STUD *For 96043030500, 96043029000, 96043032100*	1	-
359	584393401	ACTUATOR -	1	-
360	532448618	BRACKET -	1	-
361	596564002	BOLT *For 96043030500, 96043032100, 96043029000*	1	-
361	817490610	SCREW *For 96043024500, 96041041900, 96043029000*	1	-

Ref.	Article N.	Description	Qty	Kit
362	532448633	CLEVIS PIN -	1	-
365	532447368	SPACER -	1	-
375	586908201	BUMPER -	1	-
378	590849801	BUSHING -	1	-
379	593206902	PLATE -	1	-
1	581578901	DECAL *For 96043024500, 96043029000, 96043030500*	1	-
1	581579001	DECAL *For 96043024500, 96043029000*	1	-
1	586047302	DECAL *For 96041041900*	1	-
2	589357901	DECAL -	1	-
2	589357902	DECAL *For 96043032100*	1	-
3	592898301	DECAL *For 96043024500*	1	-
4	591164701	DECAL *For 96041041900, 96043029000, 96043030500, 96043032100*	1	-
5	587015101	DECAL *For 96043024500, 96043029000*	1	-
5	597470101	DECAL *For 96043030500, 96043032100*	1	-
6	596024201	DECAL *For 96043030500*	1	-
7	590885101	DECAL *For 96043024500*	1	-
7	593808801	DECAL *For 96041041900, 96043029000, 96043030500, 96043032100*	1	-
8	586978801	DECAL -	1	-
9	591164701	DECAL *For 96041041900, 96043029000, 96043030500, 96043032100*	1	-
10	501082601	DECAL *For 96041041900*	1	-
11	592898301	DECAL *For 96043024500*	1	-
14	591448701	DECAL	1	-

Ref.	Article N.	Description	Qty	Kit
		-		
15	532423829	DECAL *For 96043024500, 96041041900, 96043029000, 96043030500*	1	-
16	581627301	DECAL -	1	-
17	590937401	DECAL *For 96043024500, 96043030500, 96043032100*	1	-
17	594110601	DECAL *For 96041041900. (582 45 79-01) DECAL.*	1	-
17	596970801	DECAL *For 96043029000*	1	-
30	581579001	DECAL *For 96043024500, 96043029000*	1	-
31	586742201	DECAL *For 96043024500, 96043029000*	1	-
32	581724801	DECAL -	1	-
33	581724802	DECAL *For 96043032100*	1	-
34	532439882	PAD -	1	-
35	532439881	PAD -	1	-
1	900000002	DUMMY PART *TRANSAXLE TUFFTORQ K66ELD (580402201)*	1	-
2	539912757	KEY -	1	-
3	532007563	WASHER -	1	-
7	586935402	HUB -	1	-
9	532140080	BOLT *For 96043024500, 96041041900, 96043029000*	1	-
9	596218701	BOLT *For 96043030500, 96043032100, 96043029000*	1	-
15	596565301	WASHER *For 96043029000, 96043032100*	1	-
15	819131316	WASHER -	1	-
17	532401072	SPRING -	1	-
26	532199679	SPRING -	1	-

Ref.	Article N.	Description	Qty	Kit
29	532407245	ROD -	1	-
33	812000053	E-CLIP -	1	-
35	590605902	ROD *For 96043024500, 96043029000, 96043030500, 96043032100*	1	-
35	583864501	ROD *For 96041041900*	1	-
42	532008883	PEDAL -	1	-
49	596136201	BOLT *For 96043030500, 96043032100, 96043029000*	1	-
49	872110614	BOLT *For 96043024500, 96041041900, 96043029000*	1	-
50	532194327	PULLEY -	1	-
51	873900600	NUT -	1	-
52	532194326	PULLEY -	1	-
56	592855301	DRIVE BELT -	1	-
64	532197865	SHAFT -	1	-
69	583404901	PIN *For 96043024500*	1	-
69	532423303	HAIR PIN COTTER *For 96041041900, 96043029000, 96043030500, 96043032100*	1	-
70	532439661	CONSOLE -	1	-
73	595316601	BOLT *For 96043030500, 96043032100, 96043029000*	1	-
73	874490544	SCREW *For 96043024500, 96041041900, 96043029000*	1	-
74	596134101	SCREW *For 96043030500, 96043032100, 96043029000*	1	-
74	532142432	SCREW *For 96043024500, 96041041900, 96043029000*	1	-
80	589333402	STRAP -	1	-
92	595305701	SCREW -	1	-
99	582404701	ROD	1	-

Ref.	Article N.	Description	Qty	Kit
		-		
116	596135701	LOCK NUT -	1	-
125	817000512	SCREW -	1	-
153	532004497	CLIP -	1	-
159	596029501	PIN *For 96043030500, 96043032100, 96043029000*	1	-
159	876020412	SPLIT PIN *For 96043024500, 96041041900, 96043029000*	1	-
161	532105709	SPRING -	1	-
163	532407246	ROD -	1	-
166	532429164	NUT -	1	-
167	532405257	LATCH -	1	-
170	532194322	KEEPER -	1	-
171	596136301	BOLT -	1	-
177	587225301	PIN *For 96043030500, 96043032100, 96043029000*	1	-
177	532169484	PIN *For 96043024500, 96041041900, 96043029000*	1	-
177	596029401	RETAINER *For 96043030500, 96043032100, 96043029000*	1	-
183	598873002	SPACER *For 96043032100*	1	-
183	587587401	SPACER -	1	-
184	587653701	HANDLE -	1	-
185	872110622	BOLT -	1	-
186	532194321	SPACER -	1	-
187	596135501	WASHER -	1	-
188	582217001	LINK -	1	-

Ref.	Article N.	Description	Qty	Kit
189	532194317	PLATE -	1	-
190	532194318	BELT GUIDE -	1	-
196	817000616	SCREW -	1	-
197	585658601	CLUTCH *For 96043024500, 96041041900*	1	-
197	587402001	BRACKET *For 96043029000*	1	-
197	585658602	BOSS *For 96043030500, 96043032100, 96043029000*	1	-
205	532123800	WASHER -	1	-
206	532448596	BRACKET -	1	-
207	587031402	LATCH *For 96043030500, 96043032100, 96043029000*	1	-
207	587031401	LATCH *For 96043024500, 96041041900, 96043029000*	1	-
208	532197869	SUPPORT *For 96043024500, 96041041900, 96043029000*	1	-
208	596564101	GEAR *For 96043030500, 96043032100, 96043029000*	1	-
209	590527802	ROD *For 96043024500, 96043029000, 96043030500, 96043032100*	1	-
209	532199592	ROD *For 96041041900*	1	-
210	532197860	ARM *RH*	1	-
211	532120183	BEARING -	1	-
213	532403119	CONTROL -	1	-
214	532421263	PAD -	1	-
215	586606502	PEDAL -	1	-
220	532198908	LENS *RH*	1	-
221	532403187	SPRING -	1	-
222	879212010	WASHER	1	-

Ref.	Article N.	Description	Qty	Kit
		-		
225	532407311	KEEPER -	1	-
226	532407109	BRACKET -	1	-
282	874490548	BOLT -	1	-
366	580626201	BRACKET *For 96043024500, 96041041900*	1	-
366	580626202	BRACKET *For 96043029000, 96043030500, 96043032100*	1	-
366	592878002	BRACKET *For 96043029000, 96043032100*	1	-
1	532163465	BATTERY -	1	-
2	874760412	BOLT -	1	-
8	587205101	TRAY -	1	-
16	532176138	MICRO SWITCH -	1	-
21	532400252	HARNESS *For 96043024500*	1	-
21	585436401	HARNESS *For 96041041900*	1	-
24	585555601	CABLE *For 96043024500*	1	-
24	590223801	PRIMARY CABLE *For 96041041900*	1	-
25	585555501	CABLE -	1	-
26	532175158	FUSE -	1	-
27	586668901	NUT -	1	-
28	532416588	CABLE *For 96043024500*	1	-
28	590223702	GROUND CABLE *For 96041041900*	1	-
29	532401545	SWITCH *For 96043024500*	1	-
29	587648401	SWITCH *For 96041041900*	1	-

Ref.	Article N.	Description	Qty	Kit
30	532193350	IGNITION MODULE -	1	-
33	532411935	KEY *For 96041041900*	1	-
33	532411933	KEY *For 96043024500*	1	-
34	532110712	SWITCH -	1	-
40	501133101	HARNESS *For 96043024500*	1	-
40	590193201	WIRING ASSY *For 96041041900*	1	-
41	817720408	SCREW -	1	-
42	532131563	COVER -	1	-
43	582042801	SOLENOID -	1	-
45	590645901	GAUGE *For 96041041900*	1	-
45	587553903	GAUGE *For 96043024500*	1	-
46	594721501	GAUGE *For 96041041900*	1	-
46	587554003	GAUGE *For 96043024500*	1	-
50	582107601	SWITCH -	1	-
55	817060512	SCREW -	1	-
71	532194276	CABLE ASSY *For 96043024500*	1	-
71	590193302	WIRING ASSY *For 96041041900*	1	-
75	580366401	SWITCH *For 96041041900*	1	-
90	532435395	TERMINAL COVER -	1	-
99	817670412	SCREW -	1	-
100	819091416	WASHER -	1	-
102	532404454	CABLE	1	-

Ref.	Article N.	Description	Qty	Kit
		-		
105	532407568	SWITCH *For 96043024500*	1	-
144	590568001	CONTROL UNIT -	1	-
146	590193401	WIRING ASSY -	1	-
1	532163465	BATTERY -	1	-
2	874760412	BOLT -	1	-
8	532414126	TRAY *For 96043030500*	1	-
8	587205101	TRAY *For 96043029000, 96043032100*	1	-
16	532176138	MICRO SWITCH -	1	-
21	585436401	HARNESS -	1	-
24	585555601	CABLE -	1	-
25	585555501	CABLE -	1	-
26	532175158	FUSE -	1	-
27	586668901	NUT *For 96043029000*	1	-
27	596133601	LOCK NUT *For 96043030500, 96043032100, 96043029000*	1	-
28	532416588	CABLE -	1	-
29	532192749	SWITCH -	1	-
30	532193350	IGNITION MODULE -	1	-
33	532411935	KEY -	1	-
34	532110712	SWITCH -	1	-
40	501133601	HARNESS -	1	-
41	817720408	SCREW -	1	-

Ref.	Article N.	Description	Qty	Kit
42	532131563	COVER -	1	-
43	582042801	SOLENOID *For 96043029000*	1	-
43	582042802	SOLENOID *For 96043030500, 96043032100, 96043029000*	1	-
45	587553903	GAUGE *For 96043029000*	1	-
45	587553906	GAUGE *For 96043030500, 96043032100, 96043029000*	1	-
46	587554003	GAUGE *For 96043029000*	1	-
46	587554006	GAUGE *For 96043030500, 96043032100, 96043029000*	1	-
50	582107601	SWITCH -	1	-
50	582107602	SWITCH *for all models*	1	-
55	817060512	SCREW -	1	-
59	532400303	ELECTRICAL SYSTEM *For 96043029000*	1	-
59	596941001	RECEPTACLE *For 96043030500, 96043032100, 96043029000*	1	-
71	580513001	HARNESS -	1	-
75	580366401	SWITCH -	1	-
90	532435395	TERMINAL COVER -	1	-
99	817670412	SCREW -	1	-
100	596135301	WASHER *For 96043030500, 96043032100, 96043029000*	1	-
100	819091416	WASHER *For 96043029000*	1	-
102	532404454	CABLE -	1	-
103	532421747	HARNESS -	1	-
105	532407568	SWITCH -	1	-
1	900000002	DUMMY PART	1	-

Ref.	Article N.	Description	Qty	Kit
		Engine Kohler Model No. KT745-3093 (596957201) For 96043029000		
2	589818701	MUFFLER	1	-
9	501832602	KEEPER	1	-
9	596501502	KEEPER	1	-
11	587241401	CLUTCH	1	-
12	586899601	PULLEY	1	-
15	532438030	FUEL TANK ASSY *Fits 2.75 filler neck*	1	-
15	532438024	FUEL TANK ASSY *Fits 2.75 filler neck*	1	-
18	529989702	CAP *Fits 2.00 filler neck*	1	-
18	529989703	CAP *Fits 2.00 filler neck*	1	-
18	585124801	FUEL CAP ASSY *Fits 2.75 filler neck*	1	-
20	532424341	THROTTLE CONTROL	1	-
21	532416358	SCREW	1	-
21	596321701	SCREW	1	-
28	532401135	LINE	1	-
29	532137180	SPARK ARRESTER	1	-
37	532123487	HOSE CLAMP	1	-
41	532126197	WASHER	1	-
42	596238901	WASHER	1	-
42	539990247	WASHER	1	-
45	586668901	NUT	1	-
45	596133601	LOCK NUT	1	-
62	532434017	SHIELD	1	-
69	532178151	GASKET	1	-
70	583955601	TUBE *LH*	1	-
71	583955701	TUBE *RH*	1	-
81	532148456	TUBE	1	-
82	532428287	PLUG	1	-
85	501606901	BOLT	1	-
86	532184362	NUT	1	-
90	817000616	SCREW	1	-
91	532187495	BUSHING	1	-
92	817120616	SCREW	1	-

Ref.	Article N.	Description	Qty	Kit
102	817000512	SCREW	1	-
116	539132624	KNOB	1	-
117	532420828	VALVE FUEL RESERVE	1	-
1	588549002	DECK SHELL ASSY *For 96043024500, 96041041900*	1	-
1	592618801	SERVICE KIT *For 96043029000, 96043030500, 96043032100*	1	-
1	592618901	SERVICE KIT *For 96041041900, 96043029000, 96043030500, 96043032100*	1	-
6	590304303	COVER -	1	-
7	590304203	COVER *For 96043024500, 96041041900, 96043030500, 96043032100, 96043029000*	1	-
8	532193003	SCREW -	1	-
11	582760508	BLADE *For 96043029000, 96043032100*	1	-
11	582760502	BLADE *For 96043024500, 96041041900, 96043030500, 96043029000, 96043032100*	1	-
14	539131898	SPINDLE *Aluminium*	1	-
20	532197236	SPACER -	1	-
22	596564003	BOLT -	1	-
22	599972501	BOLT *For 96043030500*	1	-
23	588438301	SCREW -	1	-
24	532105304	HUB CAP -	1	-
25	587354701	SPRING -	1	-
26	532110452	NUT -	1	-
27	590632201	DEFLECTOR ASSY -	1	-
28	596240801	BOLT *For 96043030500, 96043032100, 96043029000*	1	-
28	539115574	EYE BOLT *For 96043024500, 96041041900, 96043029000*	1	-
29	532131491	SHAFT *For 96043024500, 96041041900, 96043029000*	1	-

Ref.	Article N.	Description	Qty	Kit
29	595297001	ROD *For 96043030500, 96043032100, 96043029000*	1	-
31	532187690	WASHER -	1	-
32	532173435	PULLEY *For 96043024500, 96041041900, 96043029000*	1	-
32	532173436	PULLEY *For 96043030500, 96043032100*	1	-
33	596134801	HEXAGON NUT *For 96043030500, 96043032100, 96043029000*	1	-
33	532400234	NUT *For 96043024500, 96041041900, 96043029000*	1	-
34	596322601	NUT *For 96043030500, 96043032100, 96043024500, 96043029000*	1	-
34	873680600	NUT *For 96041041900, 96043029000*	1	-
36	596039201	LOCK NUT *For 96043030500, 96043032100, 96043029000*	1	-
36	539990585	NUT *For 96043024500, 96041041900, 96043029000*	1	-
37	532170165	BOLT -	1	-
41	584953901	BOLT -	1	-
42	596952201	PLUG *For 96043024500, 96041041900, 96043030500, 96043029000, 96043032100*	1	-
43	582219602	ARM -	1	-
46	532137729	SCREW -	1	-
47	582236301	DRIVE BELT -	1	-
48	574196502	TUBE -	1	-
49	873900600	NUT -	1	-
51	574169601	ROLLER -	1	-
52	532197379	PULLEY -	1	-
53	872140864	BOLT *For 96043024500, 96041041900, 96043029000*	1	-
53	594944501	BOLT	1	-

Ref.	Article N.	Description	Qty	Kit
		For 96043030500, 96043032100, 96043029000		
54	521991101	NUT *For 96043024500, 96041041900, 96043029000, 96043032100*	1	-
54	521991102	NUT *For 96043030500, 96043029000, 96043032100*	1	-
61	596274401	ROD *For 96043030500, 96043032100, 96043029000*	1	-
61	532400337	TIGE ANTI-ROULIS *For 96043024500, 96041041900, 96043029000*	1	-
62	596133201	WASHER *For 96043030500, 96043032100, 96043029000*	1	-
62	596134901	WASHER *For 96043024500, 96041041900, 96043029000*	1	-
63	532194208	PIN -	1	-
66	590732501	BUMPER ASSY -	1	-
97	532178515	WASHER -	1	-
98	587358401	SPRING -	1	-
109	532416405	COUPLING -	1	-
116	596434404	BOLT -	1	-
117	589527301	WHEEL -	1	-
184	596135701	LOCK NUT *For 96043029000*	1	-
187	593824001	STUD *For 96043029000, 96043030500, 96043032100*	1	-
187	532195161	STUD -	1	-
189	532195185	ARM *For 96043024500*	1	-
189	587140502	ARM *For 96041041900, 96043029000, 96043030500, 96043032100*	1	-
190	532196539	BOLT -	1	-
192	532198468	BELT GUIDE -	1	-
196	872140620	BOLT *For 96043024500, 96041041900*	1	-

Ref.	Article N.	Description	Qty	Kit
196	596337801	BOLT *For 96043030500, 96043029000, 96043032100*	1	-
196	539128101	BOLT *For 96043029000, 96043032100*	1	-
242	532415598	HOSE COUPLING -	1	-
2	532422027	SHAFT -	1	-
3	596270601	LEVER *For 96043030500, 96043032100, 96043029000*	1	-
3	532195230	LEVER *For 96043024500, 96041041900, 96043029000*	1	-
7	580962301	GRIP -	1	-
10	532196314	SPRING -	1	-
41	532175994	NUT *For 96043024500, 96041041900, 96043029000*	1	-
41	589464902	NUT *For 96043030500, 96043032100, 96043029000*	1	-
87	532194209	SPRING -	1	-
88	532195301	SPRING *For 96043029000, 96043030500, 96043032100*	1	-
88	532195304	SPRING -	1	-
89	819191912	WASHER -	1	-
91	532403407	LINK *For 96043024500, 96041041900, 96043029000*	1	-
91	589464805	LINK ASSY *For 96043030500, 96043032100, 96043029000*	1	-
96	532195263	BUSHING *For 96043024500, 96041041900, 96043029000*	1	-
96	593842101	BUSHING *For 96043030500, 96043032100, 96043029000*	1	-
97	817000612	SCREW -	1	-
98	589318703	DECK ATTACHMENT -	1	-
114	873360700	NUT -	1	-
1	900000002	DUMMY PART	1	-

Ref.	Article N.	Description	Qty	Kit
1	588556701	SEAT *For 96043024500*	1	-
1	590337301	SEAT *For 96043030500, 96043032100*	1	-
1	590337302	SEAT *For 96041041900, 96043029000*	1	-
2	590336602	BRACKET -	1	-
3	590777602	BRACKET -	1	-
6	521996501	NUT *For 96043024500, 96041041900, 96043029000*	1	-
6	521996502	NUT *For 96043030500, 96043032100, 96043029000*	1	-
7	590812301	SPRING -	1	-
8	532171877	BOLT -	1	-
10	590481702	BRACKET -	1	-
19	590691501	KNOB -	1	-
21	596231101	BOLT -	1	-
37	594944401	NUT *For 96043029000, 96043030500, 96043032100*	1	-
37	539112899	NUT, 5/16-18, NYLOC -	1	-
42	532199371	WASHER -	1	-
47	590351101	WASHER -	1	-
1	532439740	STEERING WHEEL *For 96043024500, 96041041900, 96043029000*	1	-
1	597866101	SERVICE KIT *For 96043030500, 96043032100. Steering wheel and steering cap.*	1	-
2	532195968	SHAFT *FRONT*	1	-
4	532403089	SPINDLE SHAFT *LH*	1	-
5	532403090	SPINDLE SHAFT *RH*	1	-
6	532006266	WASHER	1	-

Ref.	Article N.	Description	Qty	Kit
		-		
7	532121748	WASHER -	1	-
8	812000029	RETAINER RING -	1	-
9	532121232	HUB CAP -	1	-
13	532121749	WASHER -	1	-
14	596238701	WASHER *For 96043030500, 96043032100, 96043029000*	1	-
14	539990118	WASHER *For 96043024500, 96041041900, 96043029000*	1	-
15	873540600	NUT -	1	-
16	587016002	SHAFT -	1	-
19	532194729	PLATE -	1	-
21	586840201	ADAPTER -	1	-
22	585029901	BEARING -	1	-
26	532439743	HUB CAP *For 96043024500, 96041041900, 96043029000*	1	-
26	594949101	CAP *For 96043030500, 96043032100*	1	-
27	596933401	WASHER *For 96043030500, 96043032100, 96043029000*	1	-
27	819211616	WASHER *For 96043024500, 96041041900, 96043029000*	1	-
28	817000612	SCREW *For 96041041900, 96043029000, 96043030500, 96043032100*	1	-
29	817000612	SCREW *For 96041041900, 96043029000, 96043030500, 96043032100*	1	-
35	532194732	PLATE -	1	-
45	587016401	WASHER -	1	-
50	873900600	NUT -	1	-
53	532188967	WASHER -	1	-

Ref.	Article N.	Description	Qty	Kit
54	874760636	BOLT -	1	-
55	532414736	SPACER -	1	-
58	532194747	BOLT -	1	-
59	532194748	WASHER -	1	-
60	873971000	NUT -	1	-
61	588794402	LINK ASSY *For 96043024500, 96041041900, 96043029000. LH.*	1	-
61	597070202	LINKAGE *For 96043030500, 96043032100, 96043029000. LH.*	1	-
62	588794502	LINK ASSY *For 96043024500, 96041041900, 96043029000. RH.*	1	-
62	597070302	LINKAGE *For 96043030500, 96043032100, 96043029000. RH.*	1	-
63	817000512	SCREW -	1	-
64	532199849	SPRING RETAINER -	1	-
65	532194734	BRACKET *FRONT*	1	-
66	871020748	BOLT -	1	-
67	532194737	BUSHING *FRONT*	1	-
68	873900700	NUT -	1	-
69	532199162	WASHER -	1	-
70	585338801	BRACKET -	1	-
75	587738906	KIT *Includes pinion and screw*	1	-
76	580683601	SCREW -	1	-
78	532057079	WASHER -	1	-
122	532444962	CAP -	1	-
1	532059192	CAP	1	-

Ref.	Article N.	Description	Qty	Kit
		-		
2	532065139	NIPPLE -	1	-
3	532181839	RIM ASSY *Front*	1	-
4	532008134	HOSE *Front (Service Item Only)*	1	-
5	532161024	TIRE *For 96043024500. FRONT (16 X 6.5-8).*	1	-
5	593145101	TIRE *For 96041041900, 96043029000, 96043030500, 96043032100. FRONT (16 X 6.5-8).*	1	-
6	532000278	NIPPLE *Front Wheel Only*	1	-
7	532009040	BEARING *Front Wheel Only*	1	-
8	532175039	HUB CAP *Front Wheel Only*	1	-
9	532170453	TIRE *For 96043024500. REAR (23 X 10.5-12).*	1	-
9	593145201	TIRE *For 96041041900, 96043029000, 96043030500, 96043032100. REAR (23 X 10.5-12).*	1	-
10	532007154	HOSE *Rear (Service Item Only*	1	-
11	532144510	WHEEL *For 96043024500, 96041041900, 96043029000. Rear.*	1	-
11	593144801	TIRE *For 96043030500, 96043032100. Rear.*	1	-
12	501503101	CAP -	1	-
16	532144334	SEALING FOAM *For 96043030500*	1	-
1	900000002	DUMMY PART *ENGINE KAWA MODEL NO. FR730V-ES04 (445363)*	1	-
2	589818701	MUFFLER -	1	-
9	501832602	KEEPER -	1	-
9	596501502	KEEPER *For 96043030500, 96043032100*	1	-
11	587241401	CLUTCH -	1	-

Ref.	Article N.	Description	Qty	Kit
12	532194343	PULLEY -	1	-
15	532422909	FUEL TANK *Fits 2.75 filler neck. For 96043030500*	1	-
15	598732401	FUEL TANK *Fits 2.75 filler neck. For 96043032100*	1	-
15	590599402	TANK *Fits 2.75 filler neck. For 96043024500, 96041041900*	1	-
18	597478501	FUEL CAP ASSY *Fits 2.75 filler neck. For 96043030500*	1	-
18	529989702	CAP *Fits 2.00 filler neck*	1	-
18	529989703	CAP *Fits 2.00 filler neck*	1	-
18	585124801	FUEL CAP ASSY *Fits 2.75 filler neck. For 96043024500, 96041041900, 96043032100*	1	-
18	599502201	FUEL CAP ASSY *Fits 2.75 filler neck. For 96043030500*	1	-
20	532424341	THROTTLE CONTROL -	1	-
21	532416358	SCREW *For 96043024500, 96041041900*	1	-
21	596321701	SCREW *For 96043030500, 96043032100*	1	-
22	532189541	CHOKE CONTROL -	1	-
28	532401135	LINE *For 96043030500*	1	-
29	532137180	SPARK ARRESTER -	1	-
30	532401135	LINE *For 96043030500*	1	-
37	532123487	HOSE CLAMP *For 96043030500*	1	-
38	532123487	HOSE CLAMP *For 96043030500*	1	-
41	532126197	WASHER -	1	-
42	596238901	WASHER *For 96043030500, 96043032100*	1	-
42	539990247	WASHER *For 96043024500, 96041041900*	1	-
45	586668901	NUT	1	-

Ref.	Article N.	Description	Qty	Kit
		For 96043024500, 96041041900		
45	596133601	LOCK NUT *For 96043030500, 96043032100*	1	-
62	532434017	SHIELD -	1	-
69	532178151	GASKET -	1	-
70	583955601	TUBE *LH*	1	-
71	583955701	TUBE *RH*	1	-
81	532148456	TUBE -	1	-
85	501606901	BOLT -	1	-
86	532184362	NUT -	1	-
90	817000616	SCREW -	1	-
91	532187495	BUSHING -	1	-
92	817120616	SCREW -	1	-
102	817000512	SCREW -	1	-
109	532414114	FILTER *For 96043030500*	1	-
110	532414118	VALVE ASSY *For 96043030500*	1	-
112	532401135	LINE *For 96043030500*	1	-
113	532414127	VALVE *For 96043030500*	1	-
116	539132624	KNOB -	1	-
117	532420828	VALVE FUEL RESERVE *For 96043030500, 96043032100*	1	-
138	532420718	PURGE *For 96043030500*	1	-
138	596941501	TUBE *For 96043030500*	1	-
143	590044401	SENSOR *For 96043024500, 96041041900*	1	-

DECALS

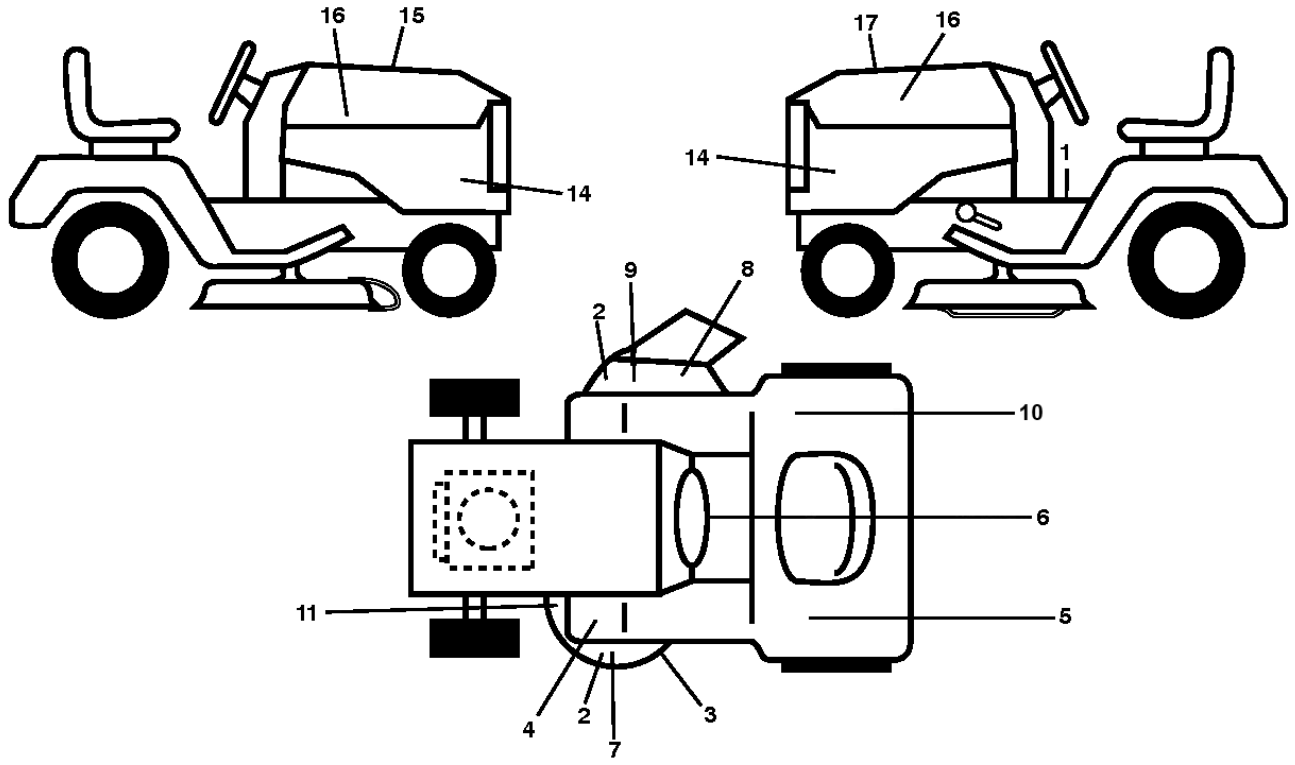

Ref.	Article N.	Description	Qty	Kit
2	580434401	DRAWBAR -	1	-
3	532444481	LOGOTYPE -	1	-
5	590748817	DASHBOARD *For 96043029000*	1	-
5	590748819	DASHBOARD *For 96041041900, 96043030500, 96043032100*	1	-
5	590748822	DASHBOARD *For 96043024500*	1	-
14	532441177	HOOD -	1	-
15	585420301	LENS *LH*	1	-
18	597247301	GRILLE *For 96043032100 and 96043030500*	1	-
18	587523401	GRILLE -	1	-
19	596133201	WASHER *For 96043030500, 96043032100, 96043029000*	1	-

Ref.	Article N.	Description	Qty	Kit
19	596134901	WASHER *For 96043024500, 96041041900, 96043029000*	1	-
25	585420201	LENS *RH*	1	-
36	817060512	SCREW -	1	-
37	532441208	FENDER *For 96043024500, 96043030500, 96043032100*	1	-
37	590534702	FENDER *For 96041041900, 96043029000*	1	-
58	532194314	BRACKET -	1	-
68	596030701	SCREW *For 96043030500, 96043032100, 96043029000*	1	-
68	539990858	SCREW *For 96043024500, 96041041900, 96043029000*	1	-
105	532431882	GUARD -	1	-
125	581684801	CLIP -	1	-
130	532416358	SCREW *For 96043024500, 96041041900, 96043029000*	1	-
130	596321701	SCREW *For 96043030500, 96043032100, 96043029000*	1	-
137	532407590	BUMPER -	1	-
146	581857901	BOLT -	1	-
150	532439774	AIR DUCT -	1	-
151	532436670	BRACKET -	1	-
152	532439870	SHIELD -	1	-
159	817000612	SCREW -	1	-
161	532439929	CONSOLE *For 96043032100*	1	-
161	532401801	CONSOLE *For 96043024500, 96043029000, 96043030500*	1	-
162	596134101	SCREW *For 96043030500, 96043032100, 96043029000*	1	-
162	532142432	SCREW	1	-

Ref.	Article N.	Description	Qty	Kit
		For 96043024500, 96041041900, 96043029000		
165	532194330	SUPPORT -	1	-
175	590607702	CROSS MEMBER -	1	-
176	532400776	SCREW -	1	-
177	532195228	BUSHING -	1	-
179	532168937	WASHER -	1	-
180	593346301	CHASSIS -	1	-
182	532406859	DASH -	1	-
183	595305701	SCREW *For 96043030500, 96043032100, 96043029000*	1	-
183	874520520	BOLT *For 96043024500, 96041041900, 96043029000*	1	-
189	817000512	SCREW -	1	-
191	586182801	REFLECTOR -	1	-
194	596135701	LOCK NUT *For 96043030500, 96043032100, 96043029000*	1	-
194	873900500	NUT *For 96043024500, 96041041900, 96043029000*	1	-
195	532404137	PLUG *For 96043024500, 96041041900*	1	-
196	532439674	CONSOLE *For 96043024500, 96041041900, 96043029000, 96043030500*	1	-
196	532439716	CONSOLE *For 96043032100*	1	-
199	532198259	PLATE -	1	-
202	532439728	COVER *RH*	1	-
203	532439727	COVER *LH*	1	-
204	587485801	VENT -	1	-
205	532439730	TRIM *RH*	1	-

Ref.	Article N.	Description	Qty	Kit
206	532439729	TRIM *LH*	1	-
207	585420002	BEZEL *RH*	1	-
208	585420102	BEZEL *LH*	1	-
214	532199145	CLIP -	1	-
217	532409167	ROD -	1	-
221	532198909	LENS *LH*	1	-
228	593824001	STUD *For 96043029000, 96043032100*	1	-
228	532195161	STUD -	1	-
235	532406129	SPACER *For 96043024500, 96041041900, 96043029000*	1	-
235	596564201	SPACER *For 96043030500, 96043032100, 96043029000*	1	-
236	873930500	NUT -	1	-
281	817000616	SCREW -	1	-
296	585420501	LIGHT -	1	-
297	586182901	REFLECTOR -	1	-
299	585420401	LIGHT -	1	-
306	873900600	NUT -	1	-
335	532448204	COVER -	1	-
336	532445309	COVER -	1	-
350	532445143	CLIP -	1	-
351	532421734	PEN -	1	-
352	532448634	CLEVIS PIN -	1	-
353	532178062	CLIP	1	-

Ref.	Article N.	Description	Qty	Kit
		-		
354	532448619	SUPPORT -	1	-
354	593196901	SUPPORT *For 96043029000, 96043030500, 96043029000, 96043032100*	1	-
355	532448636	BELLCRANK -	1	-
356	532448693	LINK -	1	-
357	532448684	COMPRESSION SPRING -	1	-
358	580366601	STUD *For 96043024500, 96041041900, 96043029000*	1	-
358	599128101	STUD *For 96043030500, 96043029000, 96043032100*	1	-
359	584393401	ACTUATOR -	1	-
360	532448618	BRACKET -	1	-
361	596564002	BOLT *For 96043030500, 96043032100, 96043029000*	1	-
361	817490610	SCREW *For 96043024500, 96041041900, 96043029000*	1	-
362	532448633	CLEVIS PIN -	1	-
365	532447368	SPACER -	1	-
375	586908201	BUMPER -	1	-
378	590849801	BUSHING -	1	-
379	593206902	PLATE -	1	-
1	581578901	DECAL *For 96043024500, 96043029000, 96043030500*	1	-
1	581579001	DECAL *For 96043024500, 96043029000*	1	-
1	586047302	DECAL *For 96041041900*	1	-
2	589357901	DECAL -	1	-
2	589357902	DECAL *For 96043032100*	1	-

Ref.	Article N.	Description	Qty	Kit
3	592898301	DECAL *For 96043024500*	1	-
4	591164701	DECAL *For 96041041900, 96043029000, 96043030500, 96043032100*	1	-
5	587015101	DECAL *For 96043024500, 96043029000*	1	-
5	597470101	DECAL *For 96043030500, 96043032100*	1	-
6	596024201	DECAL *For 96043030500*	1	-
7	590885101	DECAL *For 96043024500*	1	-
7	593808801	DECAL *For 96041041900, 96043029000, 96043030500, 96043032100*	1	-
8	586978801	DECAL -	1	-
9	591164701	DECAL *For 96041041900, 96043029000, 96043030500, 96043032100*	1	-
10	501082601	DECAL *For 96041041900*	1	-
11	592898301	DECAL *For 96043024500*	1	-
14	591448701	DECAL -	1	-
15	532423829	DECAL *For 96043024500, 96041041900, 96043029000, 96043030500*	1	-
16	581627301	DECAL -	1	-
17	590937401	DECAL *For 96043024500, 96043030500, 96043032100*	1	-
17	594110601	DECAL *For 96041041900. (582 45 79-01) DECAL.*	1	-
17	596970801	DECAL *For 96043029000*	1	-
30	581579001	DECAL *For 96043024500, 96043029000*	1	-
31	586742201	DECAL *For 96043024500, 96043029000*	1	-
32	581724801	DECAL -	1	-
33	581724802	DECAL *For 96043032100*	1	-
34	532439882	PAD	1	-

Ref.	Article N.	Description	Qty	Kit
		-		
35	532439881	PAD -	1	-
1	900000002	DUMMY PART *TRANSAXLE TUFFTORQ K66ELD (580402201)*	1	-
2	539912757	KEY -	1	-
3	532007563	WASHER -	1	-
7	586935402	HUB -	1	-
9	532140080	BOLT *For 96043024500, 96041041900, 96043029000*	1	-
9	596218701	BOLT *For 96043030500, 96043032100, 96043029000*	1	-
15	596565301	WASHER *For 96043029000, 96043032100*	1	-
15	819131316	WASHER -	1	-
17	532401072	SPRING -	1	-
26	532199679	SPRING -	1	-
29	532407245	ROD -	1	-
33	812000053	E-CLIP -	1	-
35	590605902	ROD *For 96043024500, 96043029000, 96043030500, 96043032100*	1	-
35	583864501	ROD *For 96041041900*	1	-
42	532008883	PEDAL -	1	-
49	596136201	BOLT *For 96043030500, 96043032100, 96043029000*	1	-
49	872110614	BOLT *For 96043024500, 96041041900, 96043029000*	1	-
50	532194327	PULLEY -	1	-
51	873900600	NUT -	1	-
52	532194326	PULLEY -	1	-

Ref.	Article N.	Description	Qty	Kit
56	592855301	DRIVE BELT -	1	-
64	532197865	SHAFT -	1	-
69	583404901	PIN *For 96043024500*	1	-
69	532423303	HAIR PIN COTTER *For 96041041900, 96043029000, 96043030500, 96043032100*	1	-
70	532439661	CONSOLE -	1	-
73	595316601	BOLT *For 96043030500, 96043032100, 96043029000*	1	-
73	874490544	SCREW *For 96043024500, 96041041900, 96043029000*	1	-
74	596134101	SCREW *For 96043030500, 96043032100, 96043029000*	1	-
74	532142432	SCREW *For 96043024500, 96041041900, 96043029000*	1	-
80	589333402	STRAP -	1	-
92	595305701	SCREW -	1	-
99	582404701	ROD -	1	-
116	596135701	LOCK NUT -	1	-
125	817000512	SCREW -	1	-
153	532004497	CLIP -	1	-
159	596029501	PIN *For 96043030500, 96043032100, 96043029000*	1	-
159	876020412	SPLIT PIN *For 96043024500, 96041041900, 96043029000*	1	-
161	532105709	SPRING -	1	-
163	532407246	ROD -	1	-
166	532429164	NUT -	1	-
167	532405257	LATCH -	1	-
170	532194322	KEEPER	1	-

Ref.	Article N.	Description	Qty	Kit
		-		
171	596136301	BOLT -	1	-
177	587225301	PIN *For 96043030500, 96043032100, 96043029000*	1	-
177	532169484	PIN *For 96043024500, 96041041900, 96043029000*	1	-
177	596029401	RETAINER *For 96043030500, 96043032100, 96043029000*	1	-
183	598873002	SPACER *For 96043032100*	1	-
183	587587401	SPACER -	1	-
184	587653701	HANDLE -	1	-
185	872110622	BOLT -	1	-
186	532194321	SPACER -	1	-
187	596135501	WASHER -	1	-
188	582217001	LINK -	1	-
189	532194317	PLATE -	1	-
190	532194318	BELT GUIDE -	1	-
196	817000616	SCREW -	1	-
197	585658601	CLUTCH *For 96043024500, 96041041900*	1	-
197	587402001	BRACKET *For 96043029000*	1	-
197	585658602	BOSS *For 96043030500, 96043032100, 96043029000*	1	-
205	532123800	WASHER -	1	-
206	532448596	BRACKET -	1	-
207	587031402	LATCH *For 96043030500, 96043032100, 96043029000*	1	-
207	587031401	LATCH *For 96043024500, 96041041900, 96043029000*	1	-

Ref.	Article N.	Description	Qty	Kit
208	532197869	SUPPORT *For 96043024500, 96041041900, 96043029000*	1	-
208	596564101	GEAR *For 96043030500, 96043032100, 96043029000*	1	-
209	590527802	ROD *For 96043024500, 96043029000, 96043030500, 96043032100*	1	-
209	532199592	ROD *For 96041041900*	1	-
210	532197860	ARM *RH*	1	-
211	532120183	BEARING -	1	-
213	532403119	CONTROL -	1	-
214	532421263	PAD -	1	-
215	586606502	PEDAL -	1	-
220	532198908	LENS *RH*	1	-
221	532403187	SPRING -	1	-
222	879212010	WASHER -	1	-
225	532407311	KEEPER -	1	-
226	532407109	BRACKET -	1	-
282	874490548	BOLT -	1	-
366	580626201	BRACKET *For 96043024500, 96041041900*	1	-
366	580626202	BRACKET *For 96043029000, 96043030500, 96043032100*	1	-
366	592878002	BRACKET *For 96043029000, 96043032100*	1	-
1	532163465	BATTERY -	1	-
2	874760412	BOLT -	1	-
8	587205101	TRAY -	1	-
16	532176138	MICRO SWITCH	1	-

Ref.	Article N.	Description	Qty	Kit
		-		
21	532400252	HARNESS *For 96043024500*	1	-
21	585436401	HARNESS *For 96041041900*	1	-
24	585555601	CABLE *For 96043024500*	1	-
24	590223801	PRIMARY CABLE *For 96041041900*	1	-
25	585555501	CABLE -	1	-
26	532175158	FUSE -	1	-
27	586668901	NUT -	1	-
28	532416588	CABLE *For 96043024500*	1	-
28	590223702	GROUND CABLE *For 96041041900*	1	-
29	532401545	SWITCH *For 96043024500*	1	-
29	587648401	SWITCH *For 96041041900*	1	-
30	532193350	IGNITION MODULE -	1	-
33	532411935	KEY *For 96041041900*	1	-
33	532411933	KEY *For 96043024500*	1	-
34	532110712	SWITCH -	1	-
40	501133101	HARNESS *For 96043024500*	1	-
40	590193201	WIRING ASSY *For 96041041900*	1	-
41	817720408	SCREW -	1	-
42	532131563	COVER -	1	-
43	582042801	SOLENOID -	1	-
45	590645901	GAUGE *For 96041041900*	1	-

Ref.	Article N.	Description	Qty	Kit
45	587553903	GAUGE *For 96043024500*	1	-
46	594721501	GAUGE *For 96041041900*	1	-
46	587554003	GAUGE *For 96043024500*	1	-
50	582107601	SWITCH -	1	-
55	817060512	SCREW -	1	-
71	532194276	CABLE ASSY *For 96043024500*	1	-
71	590193302	WIRING ASSY *For 96041041900*	1	-
75	580366401	SWITCH *For 96041041900*	1	-
90	532435395	TERMINAL COVER -	1	-
99	817670412	SCREW -	1	-
100	819091416	WASHER -	1	-
102	532404454	CABLE -	1	-
105	532407568	SWITCH *For 96043024500*	1	-
144	590568001	CONTROL UNIT -	1	-
146	590193401	WIRING ASSY -	1	-
1	532163465	BATTERY -	1	-
2	874760412	BOLT -	1	-
8	532414126	TRAY *For 96043030500*	1	-
8	587205101	TRAY *For 96043029000, 96043032100*	1	-
16	532176138	MICRO SWITCH -	1	-
21	585436401	HARNESS -	1	-
24	585555601	CABLE	1	-

Ref.	Article N.	Description	Qty	Kit
		-		
25	585555501	CABLE -	1	-
26	532175158	FUSE -	1	-
27	586668901	NUT *For 96043029000*	1	-
27	596133601	LOCK NUT *For 96043030500, 96043032100, 96043029000*	1	-
28	532416588	CABLE -	1	-
29	532192749	SWITCH -	1	-
30	532193350	IGNITION MODULE -	1	-
33	532411935	KEY -	1	-
34	532110712	SWITCH -	1	-
40	501133601	HARNESS -	1	-
41	817720408	SCREW -	1	-
42	532131563	COVER -	1	-
43	582042801	SOLENOID *For 96043029000*	1	-
43	582042802	SOLENOID *For 96043030500, 96043032100, 96043029000*	1	-
45	587553903	GAUGE *For 96043029000*	1	-
45	587553906	GAUGE *For 96043030500, 96043032100, 96043029000*	1	-
46	587554003	GAUGE *For 96043029000*	1	-
46	587554006	GAUGE *For 96043030500, 96043032100, 96043029000*	1	-
50	582107601	SWITCH -	1	-
50	582107602	SWITCH *for all models*	1	-
55	817060512	SCREW -	1	-

Ref.	Article N.	Description	Qty	Kit
59	532400303	ELECTRICAL SYSTEM *For 96043029000*	1	-
59	596941001	RECEPTACLE *For 96043030500, 96043032100, 96043029000*	1	-
71	580513001	HARNESS -	1	-
75	580366401	SWITCH -	1	-
90	532435395	TERMINAL COVER -	1	-
99	817670412	SCREW -	1	-
100	596135301	WASHER *For 96043030500, 96043032100, 96043029000*	1	-
100	819091416	WASHER *For 96043029000*	1	-
102	532404454	CABLE -	1	-
103	532421747	HARNESS -	1	-
105	532407568	SWITCH -	1	-
1	900000002	DUMMY PART *Engine Kohler Model No. KT745-3093 (596957201) For 96043029000*	1	-
2	589818701	MUFFLER	1	-
9	501832602	KEEPER	1	-
9	596501502	KEEPER	1	-
11	587241401	CLUTCH	1	-
12	586899601	PULLEY	1	-
15	532438030	FUEL TANK ASSY *Fits 2.75 filler neck*	1	-
15	532438024	FUEL TANK ASSY *Fits 2.75 filler neck*	1	-
18	529989702	CAP *Fits 2.00 filler neck*	1	-
18	529989703	CAP *Fits 2.00 filler neck*	1	-
18	585124801	FUEL CAP ASSY *Fits 2.75 filler neck*	1	-
20	532424341	THROTTLE CONTROL	1	-
21	532416358	SCREW	1	-
21	596321701	SCREW	1	-

Ref.	Article N.	Description	Qty	Kit
28	532401135	LINE	1	-
29	532137180	SPARK ARRESTER	1	-
37	532123487	HOSE CLAMP	1	-
41	532126197	WASHER	1	-
42	596238901	WASHER	1	-
42	539990247	WASHER	1	-
45	586668901	NUT	1	-
45	596133601	LOCK NUT	1	-
62	532434017	SHIELD	1	-
69	532178151	GASKET	1	-
70	583955601	TUBE *LH*	1	-
71	583955701	TUBE *RH*	1	-
81	532148456	TUBE	1	-
82	532428287	PLUG	1	-
85	501606901	BOLT	1	-
86	532184362	NUT	1	-
90	817000616	SCREW	1	-
91	532187495	BUSHING	1	-
92	817120616	SCREW	1	-
102	817000512	SCREW	1	-
116	539132624	KNOB	1	-
117	532420828	VALVE FUEL RESERVE	1	-
1	588549002	DECK SHELL ASSY *For 96043024500, 96041041900*	1	-
1	592618801	SERVICE KIT *For 96043029000, 96043030500, 96043032100*	1	-
1	592618901	SERVICE KIT *For 96041041900, 96043029000, 96043030500, 96043032100*	1	-
6	590304303	COVER -	1	-
7	590304203	COVER *For 96043024500, 96041041900, 96043030500, 96043032100, 96043029000*	1	-
8	532193003	SCREW -	1	-
11	582760508	BLADE *For 96043029000, 96043032100*	1	-
11	582760502	BLADE *For 96043024500, 96041041900, 96043030500, 96043029000, 96043032100*	1	-
14	539131898	SPINDLE	1	-

Ref.	Article N.	Description	Qty	Kit
		Aluminium		
20	532197236	SPACER -	1	-
22	596564003	BOLT -	1	-
22	599972501	BOLT *For 96043030500*	1	-
23	588438301	SCREW -	1	-
24	532105304	HUB CAP -	1	-
25	587354701	SPRING -	1	-
26	532110452	NUT -	1	-
27	590632201	DEFLECTOR ASSY -	1	-
28	596240801	BOLT *For 96043030500, 96043032100, 96043029000*	1	-
28	539115574	EYE BOLT *For 96043024500, 96041041900, 96043029000*	1	-
29	532131491	SHAFT *For 96043024500, 96041041900, 96043029000*	1	-
29	595297001	ROD *For 96043030500, 96043032100, 96043029000*	1	-
31	532187690	WASHER -	1	-
32	532173435	PULLEY *For 96043024500, 96041041900, 96043029000*	1	-
32	532173436	PULLEY *For 96043030500, 96043032100*	1	-
33	596134801	HEXAGON NUT *For 96043030500, 96043032100, 96043029000*	1	-
33	532400234	NUT *For 96043024500, 96041041900, 96043029000*	1	-
34	596322601	NUT *For 96043030500, 96043032100, 96043024500, 96043029000*	1	-
34	873680600	NUT *For 96041041900, 96043029000*	1	-
36	596039201	LOCK NUT *For 96043030500, 96043032100, 96043029000*	1	-
36	539990585	NUT *For 96043024500, 96041041900, 96043029000*	1	-

Ref.	Article N.	Description	Qty	Kit
37	532170165	BOLT -	1	-
41	584953901	BOLT -	1	-
42	596952201	PLUG *For 96043024500, 96041041900, 96043030500, 96043029000, 96043032100*	1	-
43	582219602	ARM -	1	-
46	532137729	SCREW -	1	-
47	582236301	DRIVE BELT -	1	-
48	574196502	TUBE -	1	-
49	873900600	NUT -	1	-
51	574169601	ROLLER -	1	-
52	532197379	PULLEY -	1	-
53	872140864	BOLT *For 96043024500, 96041041900, 96043029000*	1	-
53	594944501	BOLT *For 96043030500, 96043032100, 96043029000*	1	-
54	521991101	NUT *For 96043024500, 96041041900, 96043029000, 96043032100*	1	-
54	521991102	NUT *For 96043030500, 96043029000, 96043032100*	1	-
61	596274401	ROD *For 96043030500, 96043032100, 96043029000*	1	-
61	532400337	TIGE ANTI-ROULIS *For 96043024500, 96041041900, 96043029000*	1	-
62	596133201	WASHER *For 96043030500, 96043032100, 96043029000*	1	-
62	596134901	WASHER *For 96043024500, 96041041900, 96043029000*	1	-
63	532194208	PIN -	1	-
66	590732501	BUMPER ASSY -	1	-
97	532178515	WASHER -	1	-
98	587358401	SPRING	1	-

Ref.	Article N.	Description	Qty	Kit
		-		
109	532416405	COUPLING -	1	-
116	596434404	BOLT -	1	-
117	589527301	WHEEL -	1	-
184	596135701	LOCK NUT *For 96043029000*	1	-
187	593824001	STUD *For 96043029000, 96043030500, 96043032100*	1	-
187	532195161	STUD -	1	-
189	532195185	ARM *For 96043024500*	1	-
189	587140502	ARM *For 96041041900, 96043029000, 96043030500, 96043032100*	1	-
190	532196539	BOLT -	1	-
192	532198468	BELT GUIDE -	1	-
196	872140620	BOLT *For 96043024500, 96041041900*	1	-
196	596337801	BOLT *For 96043030500, 96043029000, 96043032100*	1	-
196	539128101	BOLT *For 96043029000, 96043032100*	1	-
242	532415598	HOSE COUPLING -	1	-
2	532422027	SHAFT -	1	-
3	596270601	LEVER *For 96043030500, 96043032100, 96043029000*	1	-
3	532195230	LEVER *For 96043024500, 96041041900, 96043029000*	1	-
7	580962301	GRIP -	1	-
10	532196314	SPRING -	1	-
41	532175994	NUT *For 96043024500, 96041041900, 96043029000*	1	-
41	589464902	NUT *For 96043030500, 96043032100, 96043029000*	1	-

Ref.	Article N.	Description	Qty	Kit
87	532194209	SPRING -	1	-
88	532195301	SPRING *For 96043029000, 96043030500, 96043032100*	1	-
88	532195304	SPRING -	1	-
89	819191912	WASHER -	1	-
91	532403407	LINK *For 96043024500, 96041041900, 96043029000*	1	-
91	589464805	LINK ASSY *For 96043030500, 96043032100, 96043029000*	1	-
96	532195263	BUSHING *For 96043024500, 96041041900, 96043029000*	1	-
96	593842101	BUSHING *For 96043030500, 96043032100, 96043029000*	1	-
97	817000612	SCREW -	1	-
98	589318703	DECK ATTACHMENT -	1	-
114	873360700	NUT -	1	-
1	900000002	DUMMY PART	1	-
1	588556701	SEAT *For 96043024500*	1	-
1	590337301	SEAT *For 96043030500, 96043032100*	1	-
1	590337302	SEAT *For 96041041900, 96043029000*	1	-
2	590336602	BRACKET -	1	-
3	590777602	BRACKET -	1	-
6	521996501	NUT *For 96043024500, 96041041900, 96043029000*	1	-
6	521996502	NUT *For 96043030500, 96043032100, 96043029000*	1	-
7	590812301	SPRING -	1	-
8	532171877	BOLT -	1	-
10	590481702	BRACKET -	1	-

Ref.	Article N.	Description	Qty	Kit
19	590691501	KNOB -	1	-
21	596231101	BOLT -	1	-
37	594944401	NUT *For 96043029000, 96043030500, 96043032100*	1	-
37	539112899	NUT, 5/16-18, NYLOC -	1	-
42	532199371	WASHER -	1	-
47	590351101	WASHER -	1	-
1	532439740	STEERING WHEEL *For 96043024500, 96041041900, 96043029000*	1	-
1	597866101	SERVICE KIT *For 96043030500, 96043032100. Steering wheel and steering cap.*	1	-
2	532195968	SHAFT *FRONT*	1	-
4	532403089	SPINDLE SHAFT *LH*	1	-
5	532403090	SPINDLE SHAFT *RH*	1	-
6	532006266	WASHER -	1	-
7	532121748	WASHER -	1	-
8	812000029	RETAINER RING -	1	-
9	532121232	HUB CAP -	1	-
13	532121749	WASHER -	1	-
14	596238701	WASHER *For 96043030500, 96043032100, 96043029000*	1	-
14	539990118	WASHER *For 96043024500, 96041041900, 96043029000*	1	-
15	873540600	NUT -	1	-
16	587016002	SHAFT -	1	-
19	532194729	PLATE -	1	-
21	586840201	ADAPTER	1	-

Ref.	Article N.	Description	Qty	Kit
		-		
22	585029901	BEARING -	1	-
26	532439743	HUB CAP *For 96043024500, 96041041900, 96043029000*	1	-
26	594949101	CAP *For 96043030500, 96043032100*	1	-
27	596933401	WASHER *For 96043030500, 96043032100, 96043029000*	1	-
27	819211616	WASHER *For 96043024500, 96041041900, 96043029000*	1	-
28	817000612	SCREW *For 96041041900, 96043029000, 96043030500, 96043032100*	1	-
29	817000612	SCREW *For 96041041900, 96043029000, 96043030500, 96043032100*	1	-
35	532194732	PLATE -	1	-
45	587016401	WASHER -	1	-
50	873900600	NUT -	1	-
53	532188967	WASHER -	1	-
54	874760636	BOLT -	1	-
55	532414736	SPACER -	1	-
58	532194747	BOLT -	1	-
59	532194748	WASHER -	1	-
60	873971000	NUT -	1	-
61	588794402	LINK ASSY *For 96043024500, 96041041900, 96043029000. LH.*	1	-
61	597070202	LINKAGE *For 96043030500, 96043032100, 96043029000. LH.*	1	-
62	588794502	LINK ASSY *For 96043024500, 96041041900, 96043029000. RH.*	1	-
62	597070302	LINKAGE *For 96043030500, 96043032100, 96043029000. RH.*	1	-
63	817000512	SCREW -	1	-

Ref.	Article N.	Description	Qty	Kit
64	532199849	SPRING RETAINER -	1	-
65	532194734	BRACKET *FRONT*	1	-
66	871020748	BOLT -	1	-
67	532194737	BUSHING *FRONT*	1	-
68	873900700	NUT -	1	-
69	532199162	WASHER -	1	-
70	585338801	BRACKET -	1	-
75	587738906	KIT *Includes pinion and screw*	1	-
76	580683601	SCREW -	1	-
78	532057079	WASHER -	1	-
122	532444962	CAP -	1	-
1	532059192	CAP -	1	-
2	532065139	NIPPLE -	1	-
3	532181839	RIM ASSY *Front*	1	-
4	532008134	HOSE *Front (Service Item Only)*	1	-
5	532161024	TIRE *For 96043024500. FRONT (16 X 6.5-8).*	1	-
5	593145101	TIRE *For 96041041900, 96043029000, 96043030500, 96043032100. FRONT (16 X 6.5-8).*	1	-
6	532000278	NIPPLE *Front Wheel Only*	1	-
7	532009040	BEARING *Front Wheel Only*	1	-
8	532175039	HUB CAP *Front Wheel Only*	1	-
9	532170453	TIRE *For 96043024500. REAR (23 X 10.5-12).*	1	-

Ref.	Article N.	Description	Qty	Kit
9	593145201	TIRE *For 96041041900, 96043029000, 96043030500, 96043032100. REAR (23 X 10.5-12).*	1	-
10	532007154	HOSE *Rear (Service Item Only*	1	-
11	532144510	WHEEL *For 96043024500, 96041041900, 96043029000. Rear.*	1	-
11	593144801	TIRE *For 96043030500, 96043032100. Rear.*	1	-
12	501503101	CAP -	1	-
16	532144334	SEALING FOAM *For 96043030500*	1	-
1	900000002	DUMMY PART *ENGINE KAWA MODEL NO. FR730V-ES04 (445363)*	1	-
2	589818701	MUFFLER -	1	-
9	501832602	KEEPER -	1	-
9	596501502	KEEPER *For 96043030500, 96043032100*	1	-
11	587241401	CLUTCH -	1	-
12	532194343	PULLEY -	1	-
15	532422909	FUEL TANK *Fits 2.75 filler neck. For 96043030500*	1	-
15	598732401	FUEL TANK *Fits 2.75 filler neck. For 96043032100*	1	-
15	590599402	TANK *Fits 2.75 filler neck. For 96043024500, 96041041900*	1	-
18	597478501	FUEL CAP ASSY *Fits 2.75 filler neck. For 96043030500*	1	-
18	529989702	CAP *Fits 2.00 filler neck*	1	-
18	529989703	CAP *Fits 2.00 filler neck*	1	-
18	585124801	FUEL CAP ASSY *Fits 2.75 filler neck. For 96043024500, 96041041900, 96043032100*	1	-
18	599502201	FUEL CAP ASSY *Fits 2.75 filler neck. For 96043030500*	1	-
20	532424341	THROTTLE CONTROL -	1	-

Ref.	Article N.	Description	Qty	Kit
21	532416358	SCREW *For 96043024500, 96041041900*	1	-
21	596321701	SCREW *For 96043030500, 96043032100*	1	-
22	532189541	CHOKE CONTROL -	1	-
28	532401135	LINE *For 96043030500*	1	-
29	532137180	SPARK ARRESTER -	1	-
30	532401135	LINE *For 96043030500*	1	-
37	532123487	HOSE CLAMP *For 96043030500*	1	-
38	532123487	HOSE CLAMP *For 96043030500*	1	-
41	532126197	WASHER -	1	-
42	596238901	WASHER *For 96043030500, 96043032100*	1	-
42	539990247	WASHER *For 96043024500, 96041041900*	1	-
45	586668901	NUT *For 96043024500, 96041041900*	1	-
45	596133601	LOCK NUT *For 96043030500, 96043032100*	1	-
62	532434017	SHIELD -	1	-
69	532178151	GASKET -	1	-
70	583955601	TUBE *LH*	1	-
71	583955701	TUBE *RH*	1	-
81	532148456	TUBE -	1	-
85	501606901	BOLT -	1	-
86	532184362	NUT -	1	-
90	817000616	SCREW -	1	-
91	532187495	BUSHING	1	-

Ref.	Article N.	Description	Qty	Kit
		-		
92	817120616	SCREW -	1	-
102	817000512	SCREW -	1	-
109	532414114	FILTER *For 96043030500*	1	-
110	532414118	VALVE ASSY *For 96043030500*	1	-
112	532401135	LINE *For 96043030500*	1	-
113	532414127	VALVE *For 96043030500*	1	-
116	539132624	KNOB -	1	-
117	532420828	VALVE FUEL RESERVE *For 96043030500, 96043032100*	1	-
138	532420718	PURGE *For 96043030500*	1	-
138	596941501	TUBE *For 96043030500*	1	-
143	590044401	SENSOR *For 96043024500, 96041041900*	1	-

DRIVE

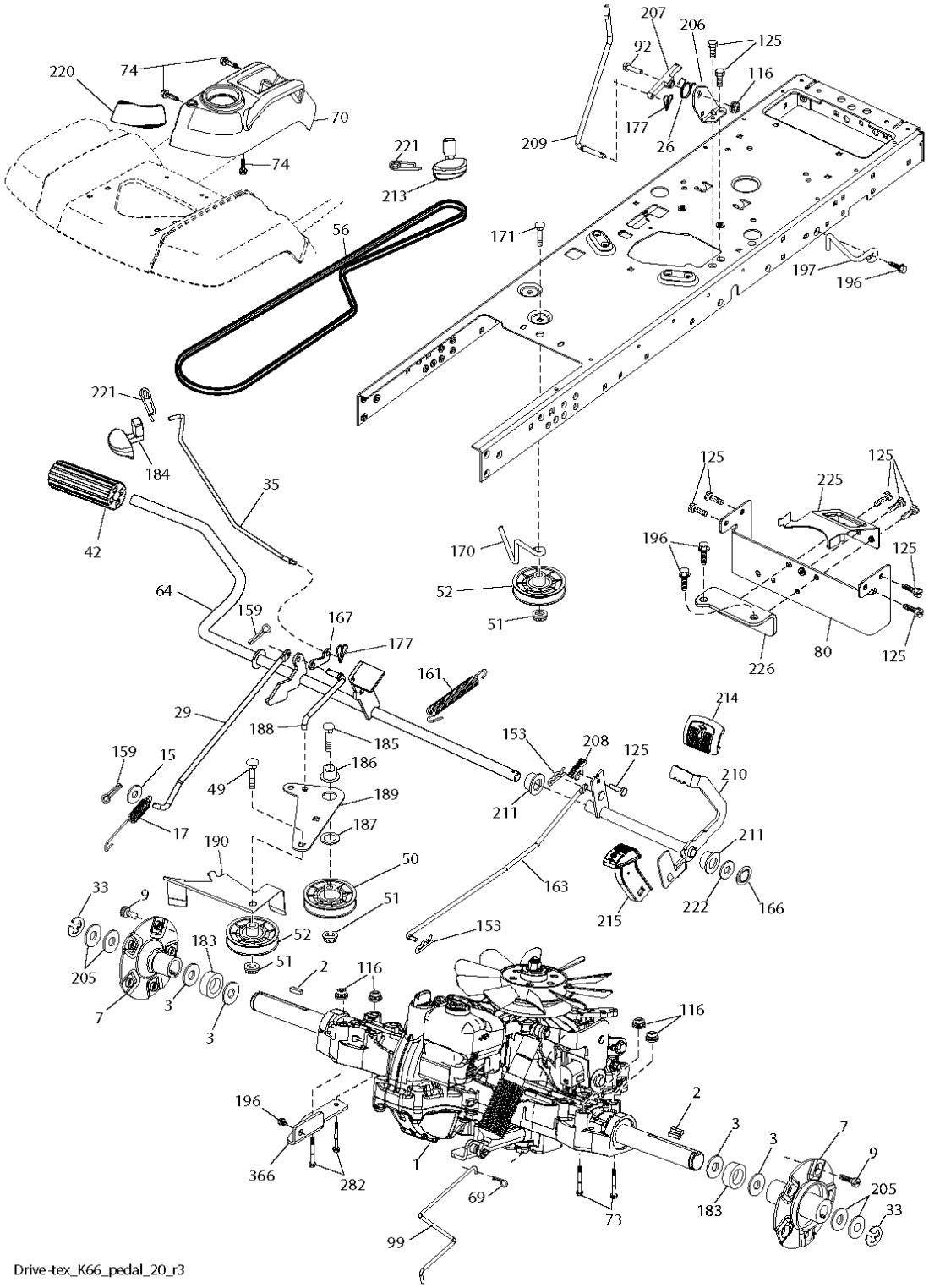

Ref.	Article N.	Description	Qty	Kit
2	580434401	DRAWBAR -	1	-
3	532444481	LOGOTYPE -	1	-
5	590748817	DASHBOARD *For 96043029000*	1	-

Ref.	Article N.	Description	Qty	Kit
5	590748819	DASHBOARD *For 96041041900, 96043030500, 96043032100*	1	-
5	590748822	DASHBOARD *For 96043024500*	1	-
14	532441177	HOOD -	1	-
15	585420301	LENS *LH*	1	-
18	597247301	GRILLE *For 96043032100 and 96043030500*	1	-
18	587523401	GRILLE -	1	-
19	596133201	WASHER *For 96043030500, 96043032100, 96043029000*	1	-
19	596134901	WASHER *For 96043024500, 96041041900, 96043029000*	1	-
25	585420201	LENS *RH*	1	-
36	817060512	SCREW -	1	-
37	532441208	FENDER *For 96043024500, 96043030500, 96043032100*	1	-
37	590534702	FENDER *For 96041041900, 96043029000*	1	-
58	532194314	BRACKET -	1	-
68	596030701	SCREW *For 96043030500, 96043032100, 96043029000*	1	-
68	539990858	SCREW *For 96043024500, 96041041900, 96043029000*	1	-
105	532431882	GUARD -	1	-
125	581684801	CLIP -	1	-
130	532416358	SCREW *For 96043024500, 96041041900, 96043029000*	1	-
130	596321701	SCREW *For 96043030500, 96043032100, 96043029000*	1	-
137	532407590	BUMPER -	1	-
146	581857901	BOLT -	1	-
150	532439774	AIR DUCT	1	-

Ref.	Article N.	Description	Qty	Kit
		-		
151	532436670	BRACKET -	1	-
152	532439870	SHIELD -	1	-
159	817000612	SCREW -	1	-
161	532439929	CONSOLE *For 96043032100*	1	-
161	532401801	CONSOLE *For 96043024500, 96043029000, 96043030500*	1	-
162	596134101	SCREW *For 96043030500, 96043032100, 96043029000*	1	-
162	532142432	SCREW *For 96043024500, 96041041900, 96043029000*	1	-
165	532194330	SUPPORT -	1	-
175	590607702	CROSS MEMBER -	1	-
176	532400776	SCREW -	1	-
177	532195228	BUSHING -	1	-
179	532168937	WASHER -	1	-
180	593346301	CHASSIS -	1	-
182	532406859	DASH -	1	-
183	595305701	SCREW *For 96043030500, 96043032100, 96043029000*	1	-
183	874520520	BOLT *For 96043024500, 96041041900, 96043029000*	1	-
189	817000512	SCREW -	1	-
191	586182801	REFLECTOR -	1	-
194	596135701	LOCK NUT *For 96043030500, 96043032100, 96043029000*	1	-
194	873900500	NUT *For 96043024500, 96041041900, 96043029000*	1	-
195	532404137	PLUG *For 96043024500, 96041041900*	1	-

Ref.	Article N.	Description	Qty	Kit
196	532439674	CONSOLE *For 96043024500, 96041041900, 96043029000, 96043030500*	1	-
196	532439716	CONSOLE *For 96043032100*	1	-
199	532198259	PLATE -	1	-
202	532439728	COVER *RH*	1	-
203	532439727	COVER *LH*	1	-
204	587485801	VENT -	1	-
205	532439730	TRIM *RH*	1	-
206	532439729	TRIM *LH*	1	-
207	585420002	BEZEL *RH*	1	-
208	585420102	BEZEL *LH*	1	-
214	532199145	CLIP -	1	-
217	532409167	ROD -	1	-
221	532198909	LENS *LH*	1	-
228	593824001	STUD *For 96043029000, 96043032100*	1	-
228	532195161	STUD -	1	-
235	532406129	SPACER *For 96043024500, 96041041900, 96043029000*	1	-
235	596564201	SPACER *For 96043030500, 96043032100, 96043029000*	1	-
236	873930500	NUT -	1	-
281	817000616	SCREW -	1	-
296	585420501	LIGHT -	1	-
297	586182901	REFLECTOR -	1	-
299	585420401	LIGHT	1	-

Ref.	Article N.	Description	Qty	Kit
		-		
306	873900600	NUT -	1	-
335	532448204	COVER -	1	-
336	532445309	COVER -	1	-
350	532445143	CLIP -	1	-
351	532421734	PEN -	1	-
352	532448634	CLEVIS PIN -	1	-
353	532178062	CLIP -	1	-
354	532448619	SUPPORT -	1	-
354	593196901	SUPPORT *For 96043029000, 96043030500, 96043029000, 96043032100*	1	-
355	532448636	BELLCRANK -	1	-
356	532448693	LINK -	1	-
357	532448684	COMPRESSION SPRING -	1	-
358	580366601	STUD *For 96043024500, 96041041900, 96043029000*	1	-
358	599128101	STUD *For 96043030500, 96043029000, 96043032100*	1	-
359	584393401	ACTUATOR -	1	-
360	532448618	BRACKET -	1	-
361	596564002	BOLT *For 96043030500, 96043032100, 96043029000*	1	-
361	817490610	SCREW *For 96043024500, 96041041900, 96043029000*	1	-
362	532448633	CLEVIS PIN -	1	-
365	532447368	SPACER -	1	-
375	586908201	BUMPER -	1	-

Ref.	Article N.	Description	Qty	Kit
378	590849801	BUSHING -	1	-
379	593206902	PLATE -	1	-
1	581578901	DECAL *For 96043024500, 96043029000, 96043030500*	1	-
1	581579001	DECAL *For 96043024500, 96043029000*	1	-
1	586047302	DECAL *For 96041041900*	1	-
2	589357901	DECAL -	1	-
2	589357902	DECAL *For 96043032100*	1	-
3	592898301	DECAL *For 96043024500*	1	-
4	591164701	DECAL *For 96041041900, 96043029000, 96043030500, 96043032100*	1	-
5	587015101	DECAL *For 96043024500, 96043029000*	1	-
5	597470101	DECAL *For 96043030500, 96043032100*	1	-
6	596024201	DECAL *For 96043030500*	1	-
7	590885101	DECAL *For 96043024500*	1	-
7	593808801	DECAL *For 96041041900, 96043029000, 96043030500, 96043032100*	1	-
8	586978801	DECAL -	1	-
9	591164701	DECAL *For 96041041900, 96043029000, 96043030500, 96043032100*	1	-
10	501082601	DECAL *For 96041041900*	1	-
11	592898301	DECAL *For 96043024500*	1	-
14	591448701	DECAL -	1	-
15	532423829	DECAL *For 96043024500, 96041041900, 96043029000, 96043030500*	1	-
16	581627301	DECAL -	1	-
17	590937401	DECAL	1	-

Ref.	Article N.	Description	Qty	Kit
		For 96043024500, 96043030500, 96043032100		
17	594110601	DECAL *For 96041041900. (582 45 79-01) DECAL.*	1	-
17	596970801	DECAL *For 96043029000*	1	-
30	581579001	DECAL *For 96043024500, 96043029000*	1	-
31	586742201	DECAL *For 96043024500, 96043029000*	1	-
32	581724801	DECAL -	1	-
33	581724802	DECAL *For 96043032100*	1	-
34	532439882	PAD -	1	-
35	532439881	PAD -	1	-
1	900000002	DUMMY PART *TRANSAXLE TUFFTORQ K66ELD (580402201)*	1	-
2	539912757	KEY -	1	-
3	532007563	WASHER -	1	-
7	586935402	HUB -	1	-
9	532140080	BOLT *For 96043024500, 96041041900, 96043029000*	1	-
9	596218701	BOLT *For 96043030500, 96043032100, 96043029000*	1	-
15	596565301	WASHER *For 96043029000, 96043032100*	1	-
15	819131316	WASHER -	1	-
17	532401072	SPRING -	1	-
26	532199679	SPRING -	1	-
29	532407245	ROD -	1	-
33	812000053	E-CLIP -	1	-
35	590605902	ROD *For 96043024500, 96043029000, 96043030500, 96043032100*	1	-

Ref.	Article N.	Description	Qty	Kit
35	583864501	ROD *For 96041041900*	1	-
42	532008883	PEDAL -	1	-
49	596136201	BOLT *For 96043030500, 96043032100, 96043029000*	1	-
49	872110614	BOLT *For 96043024500, 96041041900, 96043029000*	1	-
50	532194327	PULLEY -	1	-
51	873900600	NUT -	1	-
52	532194326	PULLEY -	1	-
56	592855301	DRIVE BELT -	1	-
64	532197865	SHAFT -	1	-
69	583404901	PIN *For 96043024500*	1	-
69	532423303	HAIR PIN COTTER *For 96041041900, 96043029000, 96043030500, 96043032100*	1	-
70	532439661	CONSOLE -	1	-
73	595316601	BOLT *For 96043030500, 96043032100, 96043029000*	1	-
73	874490544	SCREW *For 96043024500, 96041041900, 96043029000*	1	-
74	596134101	SCREW *For 96043030500, 96043032100, 96043029000*	1	-
74	532142432	SCREW *For 96043024500, 96041041900, 96043029000*	1	-
80	589333402	STRAP -	1	-
92	595305701	SCREW -	1	-
99	582404701	ROD -	1	-
116	596135701	LOCK NUT -	1	-
125	817000512	SCREW -	1	-
153	532004497	CLIP	1	-

Ref.	Article N.	Description	Qty	Kit
		-		
159	596029501	PIN *For 96043030500, 96043032100, 96043029000*	1	-
159	876020412	SPLIT PIN *For 96043024500, 96041041900, 96043029000*	1	-
161	532105709	SPRING -	1	-
163	532407246	ROD -	1	-
166	532429164	NUT -	1	-
167	532405257	LATCH -	1	-
170	532194322	KEEPER -	1	-
171	596136301	BOLT -	1	-
177	587225301	PIN *For 96043030500, 96043032100, 96043029000*	1	-
177	532169484	PIN *For 96043024500, 96041041900, 96043029000*	1	-
177	596029401	RETAINER *For 96043030500, 96043032100, 96043029000*	1	-
183	598873002	SPACER *For 96043032100*	1	-
183	587587401	SPACER -	1	-
184	587653701	HANDLE -	1	-
185	872110622	BOLT -	1	-
186	532194321	SPACER -	1	-
187	596135501	WASHER -	1	-
188	582217001	LINK -	1	-
189	532194317	PLATE -	1	-
190	532194318	BELT GUIDE -	1	-
196	817000616	SCREW -	1	-

Ref.	Article N.	Description	Qty	Kit
197	585658601	CLUTCH *For 96043024500, 96041041900*	1	-
197	587402001	BRACKET *For 96043029000*	1	-
197	585658602	BOSS *For 96043030500, 96043032100, 96043029000*	1	-
205	532123800	WASHER -	1	-
206	532448596	BRACKET -	1	-
207	587031402	LATCH *For 96043030500, 96043032100, 96043029000*	1	-
207	587031401	LATCH *For 96043024500, 96041041900, 96043029000*	1	-
208	532197869	SUPPORT *For 96043024500, 96041041900, 96043029000*	1	-
208	596564101	GEAR *For 96043030500, 96043032100, 96043029000*	1	-
209	590527802	ROD *For 96043024500, 96043029000, 96043030500, 96043032100*	1	-
209	532199592	ROD *For 96041041900*	1	-
210	532197860	ARM *RH*	1	-
211	532120183	BEARING -	1	-
213	532403119	CONTROL -	1	-
214	532421263	PAD -	1	-
215	586606502	PEDAL -	1	-
220	532198908	LENS *RH*	1	-
221	532403187	SPRING -	1	-
222	879212010	WASHER -	1	-
225	532407311	KEEPER -	1	-
226	532407109	BRACKET -	1	-
282	874490548	BOLT	1	-

Ref.	Article N.	Description	Qty	Kit
		-		
366	580626201	BRACKET *For 96043024500, 96041041900*	1	-
366	580626202	BRACKET *For 96043029000, 96043030500, 96043032100*	1	-
366	592878002	BRACKET *For 96043029000, 96043032100*	1	-
1	532163465	BATTERY -	1	-
2	874760412	BOLT -	1	-
8	587205101	TRAY -	1	-
16	532176138	MICRO SWITCH -	1	-
21	532400252	HARNESS *For 96043024500*	1	-
21	585436401	HARNESS *For 96041041900*	1	-
24	585555601	CABLE *For 96043024500*	1	-
24	590223801	PRIMARY CABLE *For 96041041900*	1	-
25	585555501	CABLE -	1	-
26	532175158	FUSE -	1	-
27	586668901	NUT -	1	-
28	532416588	CABLE *For 96043024500*	1	-
28	590223702	GROUND CABLE *For 96041041900*	1	-
29	532401545	SWITCH *For 96043024500*	1	-
29	587648401	SWITCH *For 96041041900*	1	-
30	532193350	IGNITION MODULE -	1	-
33	532411935	KEY *For 96041041900*	1	-
33	532411933	KEY *For 96043024500*	1	-

Ref.	Article N.	Description	Qty	Kit
34	532110712	SWITCH -	1	-
40	501133101	HARNESS *For 96043024500*	1	-
40	590193201	WIRING ASSY *For 96041041900*	1	-
41	817720408	SCREW -	1	-
42	532131563	COVER -	1	-
43	582042801	SOLENOID -	1	-
45	590645901	GAUGE *For 96041041900*	1	-
45	587553903	GAUGE *For 96043024500*	1	-
46	594721501	GAUGE *For 96041041900*	1	-
46	587554003	GAUGE *For 96043024500*	1	-
50	582107601	SWITCH -	1	-
55	817060512	SCREW -	1	-
71	532194276	CABLE ASSY *For 96043024500*	1	-
71	590193302	WIRING ASSY *For 96041041900*	1	-
75	580366401	SWITCH *For 96041041900*	1	-
90	532435395	TERMINAL COVER -	1	-
99	817670412	SCREW -	1	-
100	819091416	WASHER -	1	-
102	532404454	CABLE -	1	-
105	532407568	SWITCH *For 96043024500*	1	-
144	590568001	CONTROL UNIT -	1	-
146	590193401	WIRING ASSY	1	-

Ref.	Article N.	Description	Qty	Kit
		-		
1	532163465	BATTERY -	1	-
2	874760412	BOLT -	1	-
8	532414126	TRAY *For 96043030500*	1	-
8	587205101	TRAY *For 96043029000, 96043032100*	1	-
16	532176138	MICRO SWITCH -	1	-
21	585436401	HARNESS -	1	-
24	585555601	CABLE -	1	-
25	585555501	CABLE -	1	-
26	532175158	FUSE -	1	-
27	586668901	NUT *For 96043029000*	1	-
27	596133601	LOCK NUT *For 96043030500, 96043032100, 96043029000*	1	-
28	532416588	CABLE -	1	-
29	532192749	SWITCH -	1	-
30	532193350	IGNITION MODULE -	1	-
33	532411935	KEY -	1	-
34	532110712	SWITCH -	1	-
40	501133601	HARNESS -	1	-
41	817720408	SCREW -	1	-
42	532131563	COVER -	1	-
43	582042801	SOLENOID *For 96043029000*	1	-
43	582042802	SOLENOID *For 96043030500, 96043032100, 96043029000*	1	-

Ref.	Article N.	Description	Qty	Kit
45	587553903	GAUGE *For 96043029000*	1	-
45	587553906	GAUGE *For 96043030500, 96043032100, 96043029000*	1	-
46	587554003	GAUGE *For 96043029000*	1	-
46	587554006	GAUGE *For 96043030500, 96043032100, 96043029000*	1	-
50	582107601	SWITCH -	1	-
50	582107602	SWITCH *for all models*	1	-
55	817060512	SCREW -	1	-
59	532400303	ELECTRICAL SYSTEM *For 96043029000*	1	-
59	596941001	RECEPTACLE *For 96043030500, 96043032100, 96043029000*	1	-
71	580513001	HARNESS -	1	-
75	580366401	SWITCH -	1	-
90	532435395	TERMINAL COVER -	1	-
99	817670412	SCREW -	1	-
100	596135301	WASHER *For 96043030500, 96043032100, 96043029000*	1	-
100	819091416	WASHER *For 96043029000*	1	-
102	532404454	CABLE -	1	-
103	532421747	HARNESS -	1	-
105	532407568	SWITCH -	1	-
1	900000002	DUMMY PART *Engine Kohler Model No. KT745-3093 (596957201) For 96043029000*	1	-
2	589818701	MUFFLER	1	-
9	501832602	KEEPER	1	-
9	596501502	KEEPER	1	-
11	587241401	CLUTCH	1	-

Ref.	Article N.	Description	Qty	Kit
12	586899601	PULLEY	1	-
15	532438030	FUEL TANK ASSY *Fits 2.75 filler neck*	1	-
15	532438024	FUEL TANK ASSY *Fits 2.75 filler neck*	1	-
18	529989702	CAP *Fits 2.00 filler neck*	1	-
18	529989703	CAP *Fits 2.00 filler neck*	1	-
18	585124801	FUEL CAP ASSY *Fits 2.75 filler neck*	1	-
20	532424341	THROTTLE CONTROL	1	-
21	532416358	SCREW	1	-
21	596321701	SCREW	1	-
28	532401135	LINE	1	-
29	532137180	SPARK ARRESTER	1	-
37	532123487	HOSE CLAMP	1	-
41	532126197	WASHER	1	-
42	596238901	WASHER	1	-
42	539990247	WASHER	1	-
45	586668901	NUT	1	-
45	596133601	LOCK NUT	1	-
62	532434017	SHIELD	1	-
69	532178151	GASKET	1	-
70	583955601	TUBE *LH*	1	-
71	583955701	TUBE *RH*	1	-
81	532148456	TUBE	1	-
82	532428287	PLUG	1	-
85	501606901	BOLT	1	-
86	532184362	NUT	1	-
90	817000616	SCREW	1	-
91	532187495	BUSHING	1	-
92	817120616	SCREW	1	-
102	817000512	SCREW	1	-
116	539132624	KNOB	1	-
117	532420828	VALVE FUEL RESERVE	1	-
1	588549002	DECK SHELL ASSY *For 96043024500, 96041041900*	1	-

Ref.	Article N.	Description	Qty	Kit
1	592618801	SERVICE KIT *For 96043029000, 96043030500, 96043032100*	1	-
1	592618901	SERVICE KIT *For 96041041900, 96043029000, 96043030500, 96043032100*	1	-
6	590304303	COVER -	1	-
7	590304203	COVER *For 96043024500, 96041041900, 96043030500, 96043032100, 96043029000*	1	-
8	532193003	SCREW -	1	-
11	582760508	BLADE *For 96043029000, 96043032100*	1	-
11	582760502	BLADE *For 96043024500, 96041041900, 96043030500, 96043029000, 96043032100*	1	-
14	539131898	SPINDLE *Aluminium*	1	-
20	532197236	SPACER -	1	-
22	596564003	BOLT -	1	-
22	599972501	BOLT *For 96043030500*	1	-
23	588438301	SCREW -	1	-
24	532105304	HUB CAP -	1	-
25	587354701	SPRING -	1	-
26	532110452	NUT -	1	-
27	590632201	DEFLECTOR ASSY -	1	-
28	596240801	BOLT *For 96043030500, 96043032100, 96043029000*	1	-
28	539115574	EYE BOLT *For 96043024500, 96041041900, 96043029000*	1	-
29	532131491	SHAFT *For 96043024500, 96041041900, 96043029000*	1	-
29	595297001	ROD *For 96043030500, 96043032100, 96043029000*	1	-
31	532187690	WASHER -	1	-
32	532173435	PULLEY	1	-

Ref.	Article N.	Description	Qty	Kit
		For 96043024500, 96041041900, 96043029000		
32	532173436	PULLEY *For 96043030500, 96043032100*	1	-
33	596134801	HEXAGON NUT *For 96043030500, 96043032100, 96043029000*	1	-
33	532400234	NUT *For 96043024500, 96041041900, 96043029000*	1	-
34	596322601	NUT *For 96043030500, 96043032100, 96043024500, 96043029000*	1	-
34	873680600	NUT *For 96041041900, 96043029000*	1	-
36	596039201	LOCK NUT *For 96043030500, 96043032100, 96043029000*	1	-
36	539990585	NUT *For 96043024500, 96041041900, 96043029000*	1	-
37	532170165	BOLT -	1	-
41	584953901	BOLT -	1	-
42	596952201	PLUG *For 96043024500, 96041041900, 96043030500, 96043029000, 96043032100*	1	-
43	582219602	ARM -	1	-
46	532137729	SCREW -	1	-
47	582236301	DRIVE BELT -	1	-
48	574196502	TUBE -	1	-
49	873900600	NUT -	1	-
51	574169601	ROLLER -	1	-
52	532197379	PULLEY -	1	-
53	872140864	BOLT *For 96043024500, 96041041900, 96043029000*	1	-
53	594944501	BOLT *For 96043030500, 96043032100, 96043029000*	1	-
54	521991101	NUT *For 96043024500, 96041041900, 96043029000, 96043032100*	1	-
54	521991102	NUT *For 96043030500, 96043029000, 96043032100*	1	-

Ref.	Article N.	Description	Qty	Kit
61	596274401	ROD *For 96043030500, 96043032100, 96043029000*	1	-
61	532400337	TIGE ANTI-ROULIS *For 96043024500, 96041041900, 96043029000*	1	-
62	596133201	WASHER *For 96043030500, 96043032100, 96043029000*	1	-
62	596134901	WASHER *For 96043024500, 96041041900, 96043029000*	1	-
63	532194208	PIN -	1	-
66	590732501	BUMPER ASSY -	1	-
97	532178515	WASHER -	1	-
98	587358401	SPRING -	1	-
109	532416405	COUPLING -	1	-
116	596434404	BOLT -	1	-
117	589527301	WHEEL -	1	-
184	596135701	LOCK NUT *For 96043029000*	1	-
187	593824001	STUD *For 96043029000, 96043030500, 96043032100*	1	-
187	532195161	STUD -	1	-
189	532195185	ARM *For 96043024500*	1	-
189	587140502	ARM *For 96041041900, 96043029000, 96043030500, 96043032100*	1	-
190	532196539	BOLT -	1	-
192	532198468	BELT GUIDE -	1	-
196	872140620	BOLT *For 96043024500, 96041041900*	1	-
196	596337801	BOLT *For 96043030500, 96043029000, 96043032100*	1	-
196	539128101	BOLT *For 96043029000, 96043032100*	1	-
242	532415598	HOSE COUPLING	1	-

Ref.	Article N.	Description	Qty	Kit
		-		
2	532422027	SHAFT -	1	-
3	596270601	LEVER *For 96043030500, 96043032100, 96043029000*	1	-
3	532195230	LEVER *For 96043024500, 96041041900, 96043029000*	1	-
7	580962301	GRIP -	1	-
10	532196314	SPRING -	1	-
41	532175994	NUT *For 96043024500, 96041041900, 96043029000*	1	-
41	589464902	NUT *For 96043030500, 96043032100, 96043029000*	1	-
87	532194209	SPRING -	1	-
88	532195301	SPRING *For 96043029000, 96043030500, 96043032100*	1	-
88	532195304	SPRING -	1	-
89	819191912	WASHER -	1	-
91	532403407	LINK *For 96043024500, 96041041900, 96043029000*	1	-
91	589464805	LINK ASSY *For 96043030500, 96043032100, 96043029000*	1	-
96	532195263	BUSHING *For 96043024500, 96041041900, 96043029000*	1	-
96	593842101	BUSHING *For 96043030500, 96043032100, 96043029000*	1	-
97	817000612	SCREW -	1	-
98	589318703	DECK ATTACHMENT -	1	-
114	873360700	NUT -	1	-
1	900000002	DUMMY PART	1	-
1	588556701	SEAT *For 96043024500*	1	-
1	590337301	SEAT *For 96043030500, 96043032100*	1	-
1	590337302	SEAT	1	-

Ref.	Article N.	Description	Qty	Kit
		For 96041041900, 96043029000		
2	590336602	BRACKET -	1	-
3	590777602	BRACKET -	1	-
6	521996501	NUT *For 96043024500, 96041041900, 96043029000*	1	-
6	521996502	NUT *For 96043030500, 96043032100, 96043029000*	1	-
7	590812301	SPRING -	1	-
8	532171877	BOLT -	1	-
10	590481702	BRACKET -	1	-
19	590691501	KNOB -	1	-
21	596231101	BOLT -	1	-
37	594944401	NUT *For 96043029000, 96043030500, 96043032100*	1	-
37	539112899	NUT, 5/16-18, NYLOC -	1	-
42	532199371	WASHER -	1	-
47	590351101	WASHER -	1	-
1	532439740	STEERING WHEEL *For 96043024500, 96041041900, 96043029000*	1	-
1	597866101	SERVICE KIT *For 96043030500, 96043032100. Steering wheel and steering cap.*	1	-
2	532195968	SHAFT *FRONT*	1	-
4	532403089	SPINDLE SHAFT *LH*	1	-
5	532403090	SPINDLE SHAFT *RH*	1	-
6	532006266	WASHER -	1	-
7	532121748	WASHER -	1	-
8	812000029	RETAINER RING -	1	-

Ref.	Article N.	Description	Qty	Kit
9	532121232	HUB CAP -	1	-
13	532121749	WASHER -	1	-
14	596238701	WASHER *For 96043030500, 96043032100, 96043029000*	1	-
14	539990118	WASHER *For 96043024500, 96041041900, 96043029000*	1	-
15	873540600	NUT -	1	-
16	587016002	SHAFT -	1	-
19	532194729	PLATE -	1	-
21	586840201	ADAPTER -	1	-
22	585029901	BEARING -	1	-
26	532439743	HUB CAP *For 96043024500, 96041041900, 96043029000*	1	-
26	594949101	CAP *For 96043030500, 96043032100*	1	-
27	596933401	WASHER *For 96043030500, 96043032100, 96043029000*	1	-
27	819211616	WASHER *For 96043024500, 96041041900, 96043029000*	1	-
28	817000612	SCREW *For 96041041900, 96043029000, 96043030500, 96043032100*	1	-
29	817000612	SCREW *For 96041041900, 96043029000, 96043030500, 96043032100*	1	-
35	532194732	PLATE -	1	-
45	587016401	WASHER -	1	-
50	873900600	NUT -	1	-
53	532188967	WASHER -	1	-
54	874760636	BOLT -	1	-
55	532414736	SPACER -	1	-
58	532194747	BOLT	1	-

Ref.	Article N.	Description	Qty	Kit
		-		
59	532194748	WASHER -	1	-
60	873971000	NUT -	1	-
61	588794402	LINK ASSY *For 96043024500, 96041041900, 96043029000. LH.*	1	-
61	597070202	LINKAGE *For 96043030500, 96043032100, 96043029000. LH.*	1	-
62	588794502	LINK ASSY *For 96043024500, 96041041900, 96043029000. RH.*	1	-
62	597070302	LINKAGE *For 96043030500, 96043032100, 96043029000. RH.*	1	-
63	817000512	SCREW -	1	-
64	532199849	SPRING RETAINER -	1	-
65	532194734	BRACKET *FRONT*	1	-
66	871020748	BOLT -	1	-
67	532194737	BUSHING *FRONT*	1	-
68	873900700	NUT -	1	-
69	532199162	WASHER -	1	-
70	585338801	BRACKET -	1	-
75	587738906	KIT *Includes pinion and screw*	1	-
76	580683601	SCREW -	1	-
78	532057079	WASHER -	1	-
122	532444962	CAP -	1	-
1	532059192	CAP -	1	-
2	532065139	NIPPLE -	1	-
3	532181839	RIM ASSY *Front*	1	-

Ref.	Article N.	Description	Qty	Kit
4	532008134	HOSE *Front (Service Item Only)*	1	-
5	532161024	TIRE *For 96043024500. FRONT (16 X 6.5-8).*	1	-
5	593145101	TIRE *For 96041041900, 96043029000, 96043030500, 96043032100. FRONT (16 X 6.5-8).*	1	-
6	532000278	NIPPLE *Front Wheel Only*	1	-
7	532009040	BEARING *Front Wheel Only*	1	-
8	532175039	HUB CAP *Front Wheel Only*	1	-
9	532170453	TIRE *For 96043024500. REAR (23 X 10.5-12).*	1	-
9	593145201	TIRE *For 96041041900, 96043029000, 96043030500, 96043032100. REAR (23 X 10.5-12).*	1	-
10	532007154	HOSE *Rear (Service Item Only*	1	-
11	532144510	WHEEL *For 96043024500, 96041041900, 96043029000. Rear.*	1	-
11	593144801	TIRE *For 96043030500, 96043032100. Rear.*	1	-
12	501503101	CAP -	1	-
16	532144334	SEALING FOAM *For 96043030500*	1	-
1	900000002	DUMMY PART *ENGINE KAWA MODEL NO. FR730V-ES04 (445363)*	1	-
2	589818701	MUFFLER -	1	-
9	501832602	KEEPER -	1	-
9	596501502	KEEPER *For 96043030500, 96043032100*	1	-
11	587241401	CLUTCH -	1	-
12	532194343	PULLEY -	1	-
15	532422909	FUEL TANK *Fits 2.75 filler neck. For 96043030500*	1	-
15	598732401	FUEL TANK	1	-

Ref.	Article N.	Description	Qty	Kit
		Fits 2.75 filler neck. For 96043032100		
15	590599402	TANK *Fits 2.75 filler neck. For 96043024500, 96041041900*	1	-
18	597478501	FUEL CAP ASSY *Fits 2.75 filler neck. For 96043030500*	1	-
18	529989702	CAP *Fits 2.00 filler neck*	1	-
18	529989703	CAP *Fits 2.00 filler neck*	1	-
18	585124801	FUEL CAP ASSY *Fits 2.75 filler neck. For 96043024500, 96041041900, 96043032100*	1	-
18	599502201	FUEL CAP ASSY *Fits 2.75 filler neck. For 96043030500*	1	-
20	532424341	THROTTLE CONTROL -	1	-
21	532416358	SCREW *For 96043024500, 96041041900*	1	-
21	596321701	SCREW *For 96043030500, 96043032100*	1	-
22	532189541	CHOKE CONTROL -	1	-
28	532401135	LINE *For 96043030500*	1	-
29	532137180	SPARK ARRESTER -	1	-
30	532401135	LINE *For 96043030500*	1	-
37	532123487	HOSE CLAMP *For 96043030500*	1	-
38	532123487	HOSE CLAMP *For 96043030500*	1	-
41	532126197	WASHER -	1	-
42	596238901	WASHER *For 96043030500, 96043032100*	1	-
42	539990247	WASHER *For 96043024500, 96041041900*	1	-
45	586668901	NUT *For 96043024500, 96041041900*	1	-
45	596133601	LOCK NUT *For 96043030500, 96043032100*	1	-
62	532434017	SHIELD -	1	-

Ref.	Article N.	Description	Qty	Kit
69	532178151	GASKET -	1	-
70	583955601	TUBE *LH*	1	-
71	583955701	TUBE *RH*	1	-
81	532148456	TUBE -	1	-
85	501606901	BOLT -	1	-
86	532184362	NUT -	1	-
90	817000616	SCREW -	1	-
91	532187495	BUSHING -	1	-
92	817120616	SCREW -	1	-
102	817000512	SCREW -	1	-
109	532414114	FILTER *For 96043030500*	1	-
110	532414118	VALVE ASSY *For 96043030500*	1	-
112	532401135	LINE *For 96043030500*	1	-
113	532414127	VALVE *For 96043030500*	1	-
116	539132624	KNOB -	1	-
117	532420828	VALVE FUEL RESERVE *For 96043030500, 96043032100*	1	-
138	532420718	PURGE *For 96043030500*	1	-
138	596941501	TUBE *For 96043030500*	1	-
143	590044401	SENSOR *For 96043024500, 96041041900*	1	-

ELECTRICAL

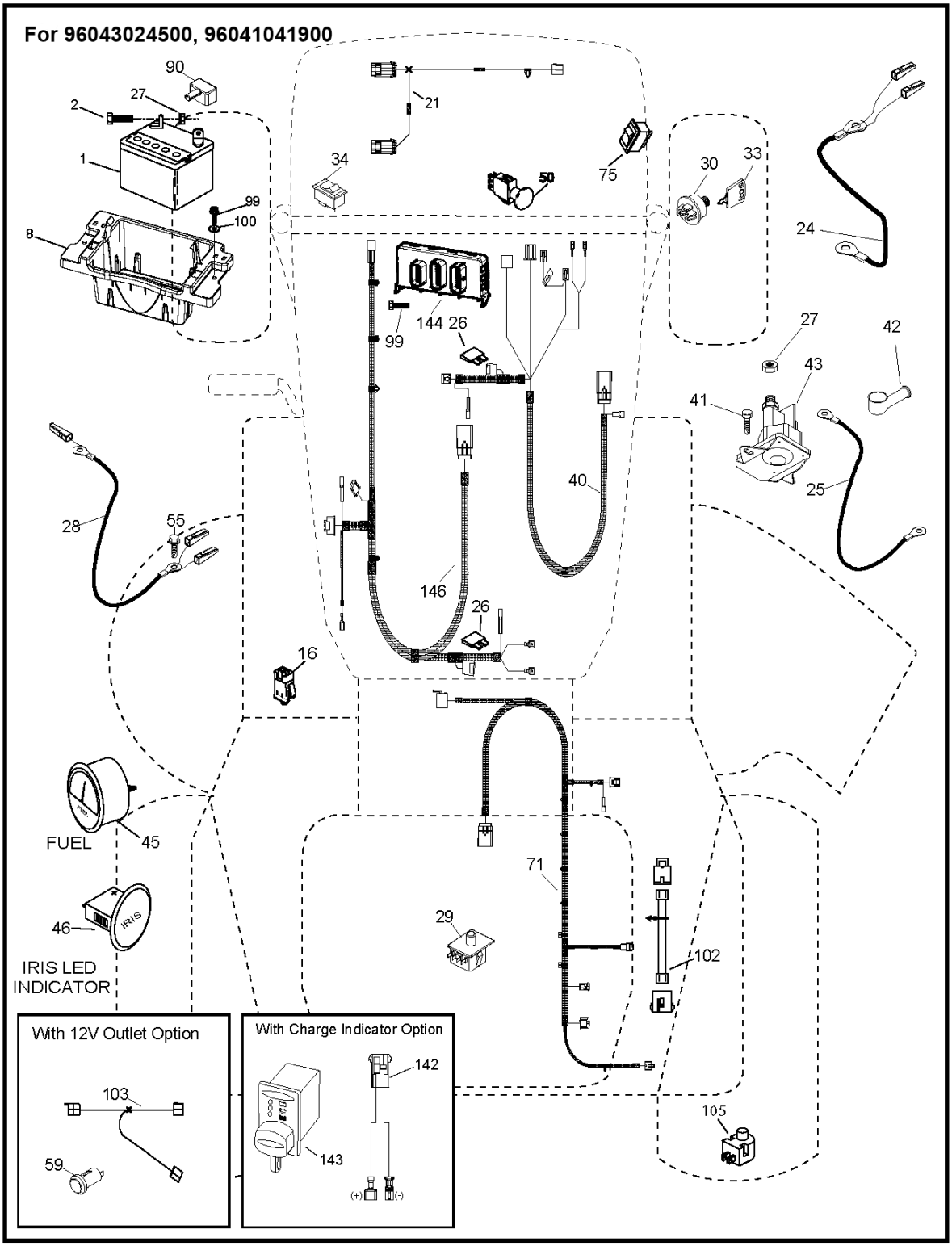

Ref.	Article N.	Description	Qty	Kit
2	580434401	DRAWBAR -	1	-
3	532444481	LOGOTYPE -	1	-
5	590748817	DASHBOARD *For 96043029000*	1	-

Ref.	Article N.	Description	Qty	Kit
5	590748819	DASHBOARD *For 96041041900, 96043030500, 96043032100*	1	-
5	590748822	DASHBOARD *For 96043024500*	1	-
14	532441177	HOOD -	1	-
15	585420301	LENS *LH*	1	-
18	597247301	GRILLE *For 96043032100 and 96043030500*	1	-
18	587523401	GRILLE -	1	-
19	596133201	WASHER *For 96043030500, 96043032100, 96043029000*	1	-
19	596134901	WASHER *For 96043024500, 96041041900, 96043029000*	1	-
25	585420201	LENS *RH*	1	-
36	817060512	SCREW -	1	-
37	532441208	FENDER *For 96043024500, 96043030500, 96043032100*	1	-
37	590534702	FENDER *For 96041041900, 96043029000*	1	-
58	532194314	BRACKET -	1	-
68	596030701	SCREW *For 96043030500, 96043032100, 96043029000*	1	-
68	539990858	SCREW *For 96043024500, 96041041900, 96043029000*	1	-
105	532431882	GUARD -	1	-
125	581684801	CLIP -	1	-
130	532416358	SCREW *For 96043024500, 96041041900, 96043029000*	1	-
130	596321701	SCREW *For 96043030500, 96043032100, 96043029000*	1	-
137	532407590	BUMPER -	1	-
146	581857901	BOLT -	1	-
150	532439774	AIR DUCT	1	-

Ref.	Article N.	Description	Qty	Kit
		-		
151	532436670	BRACKET -	1	-
152	532439870	SHIELD -	1	-
159	817000612	SCREW -	1	-
161	532439929	CONSOLE *For 96043032100*	1	-
161	532401801	CONSOLE *For 96043024500, 96043029000, 96043030500*	1	-
162	596134101	SCREW *For 96043030500, 96043032100, 96043029000*	1	-
162	532142432	SCREW *For 96043024500, 96041041900, 96043029000*	1	-
165	532194330	SUPPORT -	1	-
175	590607702	CROSS MEMBER -	1	-
176	532400776	SCREW -	1	-
177	532195228	BUSHING -	1	-
179	532168937	WASHER -	1	-
180	593346301	CHASSIS -	1	-
182	532406859	DASH -	1	-
183	595305701	SCREW *For 96043030500, 96043032100, 96043029000*	1	-
183	874520520	BOLT *For 96043024500, 96041041900, 96043029000*	1	-
189	817000512	SCREW -	1	-
191	586182801	REFLECTOR -	1	-
194	596135701	LOCK NUT *For 96043030500, 96043032100, 96043029000*	1	-
194	873900500	NUT *For 96043024500, 96041041900, 96043029000*	1	-
195	532404137	PLUG *For 96043024500, 96041041900*	1	-

Ref.	Article N.	Description	Qty	Kit
196	532439674	CONSOLE *For 96043024500, 96041041900, 96043029000, 96043030500*	1	-
196	532439716	CONSOLE *For 96043032100*	1	-
199	532198259	PLATE -	1	-
202	532439728	COVER *RH*	1	-
203	532439727	COVER *LH*	1	-
204	587485801	VENT -	1	-
205	532439730	TRIM *RH*	1	-
206	532439729	TRIM *LH*	1	-
207	585420002	BEZEL *RH*	1	-
208	585420102	BEZEL *LH*	1	-
214	532199145	CLIP -	1	-
217	532409167	ROD -	1	-
221	532198909	LENS *LH*	1	-
228	593824001	STUD *For 96043029000, 96043032100*	1	-
228	532195161	STUD -	1	-
235	532406129	SPACER *For 96043024500, 96041041900, 96043029000*	1	-
235	596564201	SPACER *For 96043030500, 96043032100, 96043029000*	1	-
236	873930500	NUT -	1	-
281	817000616	SCREW -	1	-
296	585420501	LIGHT -	1	-
297	586182901	REFLECTOR -	1	-
299	585420401	LIGHT	1	-

Ref.	Article N.	Description	Qty	Kit
		-		
306	873900600	NUT -	1	-
335	532448204	COVER -	1	-
336	532445309	COVER -	1	-
350	532445143	CLIP -	1	-
351	532421734	PEN -	1	-
352	532448634	CLEVIS PIN -	1	-
353	532178062	CLIP -	1	-
354	532448619	SUPPORT -	1	-
354	593196901	SUPPORT *For 96043029000, 96043030500, 96043029000, 96043032100*	1	-
355	532448636	BELLCRANK -	1	-
356	532448693	LINK -	1	-
357	532448684	COMPRESSION SPRING -	1	-
358	580366601	STUD *For 96043024500, 96041041900, 96043029000*	1	-
358	599128101	STUD *For 96043030500, 96043029000, 96043032100*	1	-
359	584393401	ACTUATOR -	1	-
360	532448618	BRACKET -	1	-
361	596564002	BOLT *For 96043030500, 96043032100, 96043029000*	1	-
361	817490610	SCREW *For 96043024500, 96041041900, 96043029000*	1	-
362	532448633	CLEVIS PIN -	1	-
365	532447368	SPACER -	1	-
375	586908201	BUMPER -	1	-

Ref.	Article N.	Description	Qty	Kit
378	590849801	BUSHING -	1	-
379	593206902	PLATE -	1	-
1	581578901	DECAL *For 96043024500, 96043029000, 96043030500*	1	-
1	581579001	DECAL *For 96043024500, 96043029000*	1	-
1	586047302	DECAL *For 96041041900*	1	-
2	589357901	DECAL -	1	-
2	589357902	DECAL *For 96043032100*	1	-
3	592898301	DECAL *For 96043024500*	1	-
4	591164701	DECAL *For 96041041900, 96043029000, 96043030500, 96043032100*	1	-
5	587015101	DECAL *For 96043024500, 96043029000*	1	-
5	597470101	DECAL *For 96043030500, 96043032100*	1	-
6	596024201	DECAL *For 96043030500*	1	-
7	590885101	DECAL *For 96043024500*	1	-
7	593808801	DECAL *For 96041041900, 96043029000, 96043030500, 96043032100*	1	-
8	586978801	DECAL -	1	-
9	591164701	DECAL *For 96041041900, 96043029000, 96043030500, 96043032100*	1	-
10	501082601	DECAL *For 96041041900*	1	-
11	592898301	DECAL *For 96043024500*	1	-
14	591448701	DECAL -	1	-
15	532423829	DECAL *For 96043024500, 96041041900, 96043029000, 96043030500*	1	-
16	581627301	DECAL -	1	-
17	590937401	DECAL	1	-

Ref.	Article N.	Description	Qty	Kit
		For 96043024500, 96043030500, 96043032100		
17	594110601	DECAL *For 96041041900. (582 45 79-01) DECAL.*	1	-
17	596970801	DECAL *For 96043029000*	1	-
30	581579001	DECAL *For 96043024500, 96043029000*	1	-
31	586742201	DECAL *For 96043024500, 96043029000*	1	-
32	581724801	DECAL -	1	-
33	581724802	DECAL *For 96043032100*	1	-
34	532439882	PAD -	1	-
35	532439881	PAD -	1	-
1	900000002	DUMMY PART *TRANSAXLE TUFFTORQ K66ELD (580402201)*	1	-
2	539912757	KEY -	1	-
3	532007563	WASHER -	1	-
7	586935402	HUB -	1	-
9	532140080	BOLT *For 96043024500, 96041041900, 96043029000*	1	-
9	596218701	BOLT *For 96043030500, 96043032100, 96043029000*	1	-
15	596565301	WASHER *For 96043029000, 96043032100*	1	-
15	819131316	WASHER -	1	-
17	532401072	SPRING -	1	-
26	532199679	SPRING -	1	-
29	532407245	ROD -	1	-
33	812000053	E-CLIP -	1	-
35	590605902	ROD *For 96043024500, 96043029000, 96043030500, 96043032100*	1	-

Ref.	Article N.	Description	Qty	Kit
35	583864501	ROD *For 96041041900*	1	-
42	532008883	PEDAL -	1	-
49	596136201	BOLT *For 96043030500, 96043032100, 96043029000*	1	-
49	872110614	BOLT *For 96043024500, 96041041900, 96043029000*	1	-
50	532194327	PULLEY -	1	-
51	873900600	NUT -	1	-
52	532194326	PULLEY -	1	-
56	592855301	DRIVE BELT -	1	-
64	532197865	SHAFT -	1	-
69	583404901	PIN *For 96043024500*	1	-
69	532423303	HAIR PIN COTTER *For 96041041900, 96043029000, 96043030500, 96043032100*	1	-
70	532439661	CONSOLE -	1	-
73	595316601	BOLT *For 96043030500, 96043032100, 96043029000*	1	-
73	874490544	SCREW *For 96043024500, 96041041900, 96043029000*	1	-
74	596134101	SCREW *For 96043030500, 96043032100, 96043029000*	1	-
74	532142432	SCREW *For 96043024500, 96041041900, 96043029000*	1	-
80	589333402	STRAP -	1	-
92	595305701	SCREW -	1	-
99	582404701	ROD -	1	-
116	596135701	LOCK NUT -	1	-
125	817000512	SCREW -	1	-
153	532004497	CLIP	1	-

Ref.	Article N.	Description	Qty	Kit
		-		
159	596029501	PIN *For 96043030500, 96043032100, 96043029000*	1	-
159	876020412	SPLIT PIN *For 96043024500, 96041041900, 96043029000*	1	-
161	532105709	SPRING -	1	-
163	532407246	ROD -	1	-
166	532429164	NUT -	1	-
167	532405257	LATCH -	1	-
170	532194322	KEEPER -	1	-
171	596136301	BOLT -	1	-
177	587225301	PIN *For 96043030500, 96043032100, 96043029000*	1	-
177	532169484	PIN *For 96043024500, 96041041900, 96043029000*	1	-
177	596029401	RETAINER *For 96043030500, 96043032100, 96043029000*	1	-
183	598873002	SPACER *For 96043032100*	1	-
183	587587401	SPACER -	1	-
184	587653701	HANDLE -	1	-
185	872110622	BOLT -	1	-
186	532194321	SPACER -	1	-
187	596135501	WASHER -	1	-
188	582217001	LINK -	1	-
189	532194317	PLATE -	1	-
190	532194318	BELT GUIDE -	1	-
196	817000616	SCREW -	1	-

Ref.	Article N.	Description	Qty	Kit
197	585658601	CLUTCH *For 96043024500, 96041041900*	1	-
197	587402001	BRACKET *For 96043029000*	1	-
197	585658602	BOSS *For 96043030500, 96043032100, 96043029000*	1	-
205	532123800	WASHER -	1	-
206	532448596	BRACKET -	1	-
207	587031402	LATCH *For 96043030500, 96043032100, 96043029000*	1	-
207	587031401	LATCH *For 96043024500, 96041041900, 96043029000*	1	-
208	532197869	SUPPORT *For 96043024500, 96041041900, 96043029000*	1	-
208	596564101	GEAR *For 96043030500, 96043032100, 96043029000*	1	-
209	590527802	ROD *For 96043024500, 96043029000, 96043030500, 96043032100*	1	-
209	532199592	ROD *For 96041041900*	1	-
210	532197860	ARM *RH*	1	-
211	532120183	BEARING -	1	-
213	532403119	CONTROL -	1	-
214	532421263	PAD -	1	-
215	586606502	PEDAL -	1	-
220	532198908	LENS *RH*	1	-
221	532403187	SPRING -	1	-
222	879212010	WASHER -	1	-
225	532407311	KEEPER -	1	-
226	532407109	BRACKET -	1	-
282	874490548	BOLT	1	-

Ref.	Article N.	Description	Qty	Kit
		-		
366	580626201	BRACKET *For 96043024500, 96041041900*	1	-
366	580626202	BRACKET *For 96043029000, 96043030500, 96043032100*	1	-
366	592878002	BRACKET *For 96043029000, 96043032100*	1	-
1	532163465	BATTERY -	1	-
2	874760412	BOLT -	1	-
8	587205101	TRAY -	1	-
16	532176138	MICRO SWITCH -	1	-
21	532400252	HARNESS *For 96043024500*	1	-
21	585436401	HARNESS *For 96041041900*	1	-
24	585555601	CABLE *For 96043024500*	1	-
24	590223801	PRIMARY CABLE *For 96041041900*	1	-
25	585555501	CABLE -	1	-
26	532175158	FUSE -	1	-
27	586668901	NUT -	1	-
28	532416588	CABLE *For 96043024500*	1	-
28	590223702	GROUND CABLE *For 96041041900*	1	-
29	532401545	SWITCH *For 96043024500*	1	-
29	587648401	SWITCH *For 96041041900*	1	-
30	532193350	IGNITION MODULE -	1	-
33	532411935	KEY *For 96041041900*	1	-
33	532411933	KEY *For 96043024500*	1	-

Ref.	Article N.	Description	Qty	Kit
34	532110712	SWITCH -	1	-
40	501133101	HARNESS *For 96043024500*	1	-
40	590193201	WIRING ASSY *For 96041041900*	1	-
41	817720408	SCREW -	1	-
42	532131563	COVER -	1	-
43	582042801	SOLENOID -	1	-
45	590645901	GAUGE *For 96041041900*	1	-
45	587553903	GAUGE *For 96043024500*	1	-
46	594721501	GAUGE *For 96041041900*	1	-
46	587554003	GAUGE *For 96043024500*	1	-
50	582107601	SWITCH -	1	-
55	817060512	SCREW -	1	-
71	532194276	CABLE ASSY *For 96043024500*	1	-
71	590193302	WIRING ASSY *For 96041041900*	1	-
75	580366401	SWITCH *For 96041041900*	1	-
90	532435395	TERMINAL COVER -	1	-
99	817670412	SCREW -	1	-
100	819091416	WASHER -	1	-
102	532404454	CABLE -	1	-
105	532407568	SWITCH *For 96043024500*	1	-
144	590568001	CONTROL UNIT -	1	-
146	590193401	WIRING ASSY	1	-

Ref.	Article N.	Description	Qty	Kit
		-		
1	532163465	BATTERY -	1	-
2	874760412	BOLT -	1	-
8	532414126	TRAY *For 96043030500*	1	-
8	587205101	TRAY *For 96043029000, 96043032100*	1	-
16	532176138	MICRO SWITCH -	1	-
21	585436401	HARNESS -	1	-
24	585555601	CABLE -	1	-
25	585555501	CABLE -	1	-
26	532175158	FUSE -	1	-
27	586668901	NUT *For 96043029000*	1	-
27	596133601	LOCK NUT *For 96043030500, 96043032100, 96043029000*	1	-
28	532416588	CABLE -	1	-
29	532192749	SWITCH -	1	-
30	532193350	IGNITION MODULE -	1	-
33	532411935	KEY -	1	-
34	532110712	SWITCH -	1	-
40	501133601	HARNESS -	1	-
41	817720408	SCREW -	1	-
42	532131563	COVER -	1	-
43	582042801	SOLENOID *For 96043029000*	1	-
43	582042802	SOLENOID *For 96043030500, 96043032100, 96043029000*	1	-

Ref.	Article N.	Description	Qty	Kit
45	587553903	GAUGE *For 96043029000*	1	-
45	587553906	GAUGE *For 96043030500, 96043032100, 96043029000*	1	-
46	587554003	GAUGE *For 96043029000*	1	-
46	587554006	GAUGE *For 96043030500, 96043032100, 96043029000*	1	-
50	582107601	SWITCH -	1	-
50	582107602	SWITCH *for all models*	1	-
55	817060512	SCREW -	1	-
59	532400303	ELECTRICAL SYSTEM *For 96043029000*	1	-
59	596941001	RECEPTACLE *For 96043030500, 96043032100, 96043029000*	1	-
71	580513001	HARNESS -	1	-
75	580366401	SWITCH -	1	-
90	532435395	TERMINAL COVER -	1	-
99	817670412	SCREW -	1	-
100	596135301	WASHER *For 96043030500, 96043032100, 96043029000*	1	-
100	819091416	WASHER *For 96043029000*	1	-
102	532404454	CABLE -	1	-
103	532421747	HARNESS -	1	-
105	532407568	SWITCH -	1	-
1	900000002	DUMMY PART *Engine Kohler Model No. KT745-3093 (596957201) For 96043029000*	1	-
2	589818701	MUFFLER	1	-
9	501832602	KEEPER	1	-
9	596501502	KEEPER	1	-
11	587241401	CLUTCH	1	-

Ref.	Article N.	Description	Qty	Kit
12	586899601	PULLEY	1	-
15	532438030	FUEL TANK ASSY *Fits 2.75 filler neck*	1	-
15	532438024	FUEL TANK ASSY *Fits 2.75 filler neck*	1	-
18	529989702	CAP *Fits 2.00 filler neck*	1	-
18	529989703	CAP *Fits 2.00 filler neck*	1	-
18	585124801	FUEL CAP ASSY *Fits 2.75 filler neck*	1	-
20	532424341	THROTTLE CONTROL	1	-
21	532416358	SCREW	1	-
21	596321701	SCREW	1	-
28	532401135	LINE	1	-
29	532137180	SPARK ARRESTER	1	-
37	532123487	HOSE CLAMP	1	-
41	532126197	WASHER	1	-
42	596238901	WASHER	1	-
42	539990247	WASHER	1	-
45	586668901	NUT	1	-
45	596133601	LOCK NUT	1	-
62	532434017	SHIELD	1	-
69	532178151	GASKET	1	-
70	583955601	TUBE *LH*	1	-
71	583955701	TUBE *RH*	1	-
81	532148456	TUBE	1	-
82	532428287	PLUG	1	-
85	501606901	BOLT	1	-
86	532184362	NUT	1	-
90	817000616	SCREW	1	-
91	532187495	BUSHING	1	-
92	817120616	SCREW	1	-
102	817000512	SCREW	1	-
116	539132624	KNOB	1	-
117	532420828	VALVE FUEL RESERVE	1	-
1	588549002	DECK SHELL ASSY *For 96043024500, 96041041900*	1	-

Ref.	Article N.	Description	Qty	Kit
1	592618801	SERVICE KIT *For 96043029000, 96043030500, 96043032100*	1	-
1	592618901	SERVICE KIT *For 96041041900, 96043029000, 96043030500, 96043032100*	1	-
6	590304303	COVER -	1	-
7	590304203	COVER *For 96043024500, 96041041900, 96043030500, 96043032100, 96043029000*	1	-
8	532193003	SCREW -	1	-
11	582760508	BLADE *For 96043029000, 96043032100*	1	-
11	582760502	BLADE *For 96043024500, 96041041900, 96043030500, 96043029000, 96043032100*	1	-
14	539131898	SPINDLE *Aluminium*	1	-
20	532197236	SPACER -	1	-
22	596564003	BOLT -	1	-
22	599972501	BOLT *For 96043030500*	1	-
23	588438301	SCREW -	1	-
24	532105304	HUB CAP -	1	-
25	587354701	SPRING -	1	-
26	532110452	NUT -	1	-
27	590632201	DEFLECTOR ASSY -	1	-
28	596240801	BOLT *For 96043030500, 96043032100, 96043029000*	1	-
28	539115574	EYE BOLT *For 96043024500, 96041041900, 96043029000*	1	-
29	532131491	SHAFT *For 96043024500, 96041041900, 96043029000*	1	-
29	595297001	ROD *For 96043030500, 96043032100, 96043029000*	1	-
31	532187690	WASHER -	1	-
32	532173435	PULLEY	1	-

Ref.	Article N.	Description	Qty	Kit
		For 96043024500, 96041041900, 96043029000		
32	532173436	PULLEY *For 96043030500, 96043032100*	1	-
33	596134801	HEXAGON NUT *For 96043030500, 96043032100, 96043029000*	1	-
33	532400234	NUT *For 96043024500, 96041041900, 96043029000*	1	-
34	596322601	NUT *For 96043030500, 96043032100, 96043024500, 96043029000*	1	-
34	873680600	NUT *For 96041041900, 96043029000*	1	-
36	596039201	LOCK NUT *For 96043030500, 96043032100, 96043029000*	1	-
36	539990585	NUT *For 96043024500, 96041041900, 96043029000*	1	-
37	532170165	BOLT -	1	-
41	584953901	BOLT -	1	-
42	596952201	PLUG *For 96043024500, 96041041900, 96043030500, 96043029000, 96043032100*	1	-
43	582219602	ARM -	1	-
46	532137729	SCREW -	1	-
47	582236301	DRIVE BELT -	1	-
48	574196502	TUBE -	1	-
49	873900600	NUT -	1	-
51	574169601	ROLLER -	1	-
52	532197379	PULLEY -	1	-
53	872140864	BOLT *For 96043024500, 96041041900, 96043029000*	1	-
53	594944501	BOLT *For 96043030500, 96043032100, 96043029000*	1	-
54	521991101	NUT *For 96043024500, 96041041900, 96043029000, 96043032100*	1	-
54	521991102	NUT *For 96043030500, 96043029000, 96043032100*	1	-

Ref.	Article N.	Description	Qty	Kit
61	596274401	ROD *For 96043030500, 96043032100, 96043029000*	1	-
61	532400337	TIGE ANTI-ROULIS *For 96043024500, 96041041900, 96043029000*	1	-
62	596133201	WASHER *For 96043030500, 96043032100, 96043029000*	1	-
62	596134901	WASHER *For 96043024500, 96041041900, 96043029000*	1	-
63	532194208	PIN -	1	-
66	590732501	BUMPER ASSY -	1	-
97	532178515	WASHER -	1	-
98	587358401	SPRING -	1	-
109	532416405	COUPLING -	1	-
116	596434404	BOLT -	1	-
117	589527301	WHEEL -	1	-
184	596135701	LOCK NUT *For 96043029000*	1	-
187	593824001	STUD *For 96043029000, 96043030500, 96043032100*	1	-
187	532195161	STUD -	1	-
189	532195185	ARM *For 96043024500*	1	-
189	587140502	ARM *For 96041041900, 96043029000, 96043030500, 96043032100*	1	-
190	532196539	BOLT -	1	-
192	532198468	BELT GUIDE -	1	-
196	872140620	BOLT *For 96043024500, 96041041900*	1	-
196	596337801	BOLT *For 96043030500, 96043029000, 96043032100*	1	-
196	539128101	BOLT *For 96043029000, 96043032100*	1	-
242	532415598	HOSE COUPLING	1	-

Ref.	Article N.	Description	Qty	Kit
		-		
2	532422027	SHAFT -	1	-
3	596270601	LEVER *For 96043030500, 96043032100, 96043029000*	1	-
3	532195230	LEVER *For 96043024500, 96041041900, 96043029000*	1	-
7	580962301	GRIP -	1	-
10	532196314	SPRING -	1	-
41	532175994	NUT *For 96043024500, 96041041900, 96043029000*	1	-
41	589464902	NUT *For 96043030500, 96043032100, 96043029000*	1	-
87	532194209	SPRING -	1	-
88	532195301	SPRING *For 96043029000, 96043030500, 96043032100*	1	-
88	532195304	SPRING -	1	-
89	819191912	WASHER -	1	-
91	532403407	LINK *For 96043024500, 96041041900, 96043029000*	1	-
91	589464805	LINK ASSY *For 96043030500, 96043032100, 96043029000*	1	-
96	532195263	BUSHING *For 96043024500, 96041041900, 96043029000*	1	-
96	593842101	BUSHING *For 96043030500, 96043032100, 96043029000*	1	-
97	817000612	SCREW -	1	-
98	589318703	DECK ATTACHMENT -	1	-
114	873360700	NUT -	1	-
1	900000002	DUMMY PART	1	-
1	588556701	SEAT *For 96043024500*	1	-
1	590337301	SEAT *For 96043030500, 96043032100*	1	-
1	590337302	SEAT	1	-

Ref.	Article N.	Description	Qty	Kit
		For 96041041900, 96043029000		
2	590336602	BRACKET -	1	-
3	590777602	BRACKET -	1	-
6	521996501	NUT *For 96043024500, 96041041900, 96043029000*	1	-
6	521996502	NUT *For 96043030500, 96043032100, 96043029000*	1	-
7	590812301	SPRING -	1	-
8	532171877	BOLT -	1	-
10	590481702	BRACKET -	1	-
19	590691501	KNOB -	1	-
21	596231101	BOLT -	1	-
37	594944401	NUT *For 96043029000, 96043030500, 96043032100*	1	-
37	539112899	NUT, 5/16-18, NYLOC -	1	-
42	532199371	WASHER -	1	-
47	590351101	WASHER -	1	-
1	532439740	STEERING WHEEL *For 96043024500, 96041041900, 96043029000*	1	-
1	597866101	SERVICE KIT *For 96043030500, 96043032100. Steering wheel and steering cap.*	1	-
2	532195968	SHAFT *FRONT*	1	-
4	532403089	SPINDLE SHAFT *LH*	1	-
5	532403090	SPINDLE SHAFT *RH*	1	-
6	532006266	WASHER -	1	-
7	532121748	WASHER -	1	-
8	812000029	RETAINER RING -	1	-

Ref.	Article N.	Description	Qty	Kit
9	532121232	HUB CAP -	1	-
13	532121749	WASHER -	1	-
14	596238701	WASHER *For 96043030500, 96043032100, 96043029000*	1	-
14	539990118	WASHER *For 96043024500, 96041041900, 96043029000*	1	-
15	873540600	NUT -	1	-
16	587016002	SHAFT -	1	-
19	532194729	PLATE -	1	-
21	586840201	ADAPTER -	1	-
22	585029901	BEARING -	1	-
26	532439743	HUB CAP *For 96043024500, 96041041900, 96043029000*	1	-
26	594949101	CAP *For 96043030500, 96043032100*	1	-
27	596933401	WASHER *For 96043030500, 96043032100, 96043029000*	1	-
27	819211616	WASHER *For 96043024500, 96041041900, 96043029000*	1	-
28	817000612	SCREW *For 96041041900, 96043029000, 96043030500, 96043032100*	1	-
29	817000612	SCREW *For 96041041900, 96043029000, 96043030500, 96043032100*	1	-
35	532194732	PLATE -	1	-
45	587016401	WASHER -	1	-
50	873900600	NUT -	1	-
53	532188967	WASHER -	1	-
54	874760636	BOLT -	1	-
55	532414736	SPACER -	1	-
58	532194747	BOLT	1	-

Ref.	Article N.	Description	Qty	Kit
		-		
59	532194748	WASHER -	1	-
60	873971000	NUT -	1	-
61	588794402	LINK ASSY *For 96043024500, 96041041900, 96043029000. LH.*	1	-
61	597070202	LINKAGE *For 96043030500, 96043032100, 96043029000. LH.*	1	-
62	588794502	LINK ASSY *For 96043024500, 96041041900, 96043029000. RH.*	1	-
62	597070302	LINKAGE *For 96043030500, 96043032100, 96043029000. RH.*	1	-
63	817000512	SCREW -	1	-
64	532199849	SPRING RETAINER -	1	-
65	532194734	BRACKET *FRONT*	1	-
66	871020748	BOLT -	1	-
67	532194737	BUSHING *FRONT*	1	-
68	873900700	NUT -	1	-
69	532199162	WASHER -	1	-
70	585338801	BRACKET -	1	-
75	587738906	KIT *Includes pinion and screw*	1	-
76	580683601	SCREW -	1	-
78	532057079	WASHER -	1	-
122	532444962	CAP -	1	-
1	532059192	CAP -	1	-
2	532065139	NIPPLE -	1	-
3	532181839	RIM ASSY *Front*	1	-

Ref.	Article N.	Description	Qty	Kit
4	532008134	HOSE *Front (Service Item Only)*	1	-
5	532161024	TIRE *For 96043024500. FRONT (16 X 6.5-8).*	1	-
5	593145101	TIRE *For 96041041900, 96043029000, 96043030500, 96043032100. FRONT (16 X 6.5-8).*	1	-
6	532000278	NIPPLE *Front Wheel Only*	1	-
7	532009040	BEARING *Front Wheel Only*	1	-
8	532175039	HUB CAP *Front Wheel Only*	1	-
9	532170453	TIRE *For 96043024500. REAR (23 X 10.5-12).*	1	-
9	593145201	TIRE *For 96041041900, 96043029000, 96043030500, 96043032100. REAR (23 X 10.5-12).*	1	-
10	532007154	HOSE *Rear (Service Item Only*	1	-
11	532144510	WHEEL *For 96043024500, 96041041900, 96043029000. Rear.*	1	-
11	593144801	TIRE *For 96043030500, 96043032100. Rear.*	1	-
12	501503101	CAP -	1	-
16	532144334	SEALING FOAM *For 96043030500*	1	-
1	900000002	DUMMY PART *ENGINE KAWA MODEL NO. FR730V-ES04 (445363)*	1	-
2	589818701	MUFFLER -	1	-
9	501832602	KEEPER -	1	-
9	596501502	KEEPER *For 96043030500, 96043032100*	1	-
11	587241401	CLUTCH -	1	-
12	532194343	PULLEY -	1	-
15	532422909	FUEL TANK *Fits 2.75 filler neck. For 96043030500*	1	-
15	598732401	FUEL TANK	1	-

Ref.	Article N.	Description	Qty	Kit
		Fits 2.75 filler neck. For 96043032100		
15	590599402	TANK *Fits 2.75 filler neck. For 96043024500, 96041041900*	1	-
18	597478501	FUEL CAP ASSY *Fits 2.75 filler neck. For 96043030500*	1	-
18	529989702	CAP *Fits 2.00 filler neck*	1	-
18	529989703	CAP *Fits 2.00 filler neck*	1	-
18	585124801	FUEL CAP ASSY *Fits 2.75 filler neck. For 96043024500, 96041041900, 96043032100*	1	-
18	599502201	FUEL CAP ASSY *Fits 2.75 filler neck. For 96043030500*	1	-
20	532424341	THROTTLE CONTROL -	1	-
21	532416358	SCREW *For 96043024500, 96041041900*	1	-
21	596321701	SCREW *For 96043030500, 96043032100*	1	-
22	532189541	CHOKE CONTROL -	1	-
28	532401135	LINE *For 96043030500*	1	-
29	532137180	SPARK ARRESTER -	1	-
30	532401135	LINE *For 96043030500*	1	-
37	532123487	HOSE CLAMP *For 96043030500*	1	-
38	532123487	HOSE CLAMP *For 96043030500*	1	-
41	532126197	WASHER -	1	-
42	596238901	WASHER *For 96043030500, 96043032100*	1	-
42	539990247	WASHER *For 96043024500, 96041041900*	1	-
45	586668901	NUT *For 96043024500, 96041041900*	1	-
45	596133601	LOCK NUT *For 96043030500, 96043032100*	1	-
62	532434017	SHIELD -	1	-

Ref.	Article N.	Description	Qty	Kit
69	532178151	GASKET -	1	-
70	583955601	TUBE *LH*	1	-
71	583955701	TUBE *RH*	1	-
81	532148456	TUBE -	1	-
85	501606901	BOLT -	1	-
86	532184362	NUT -	1	-
90	817000616	SCREW -	1	-
91	532187495	BUSHING -	1	-
92	817120616	SCREW -	1	-
102	817000512	SCREW -	1	-
109	532414114	FILTER *For 96043030500*	1	-
110	532414118	VALVE ASSY *For 96043030500*	1	-
112	532401135	LINE *For 96043030500*	1	-
113	532414127	VALVE *For 96043030500*	1	-
116	539132624	KNOB -	1	-
117	532420828	VALVE FUEL RESERVE *For 96043030500, 96043032100*	1	-
138	532420718	PURGE *For 96043030500*	1	-
138	596941501	TUBE *For 96043030500*	1	-
143	590044401	SENSOR *For 96043024500, 96041041900*	1	-

ELECTRICAL

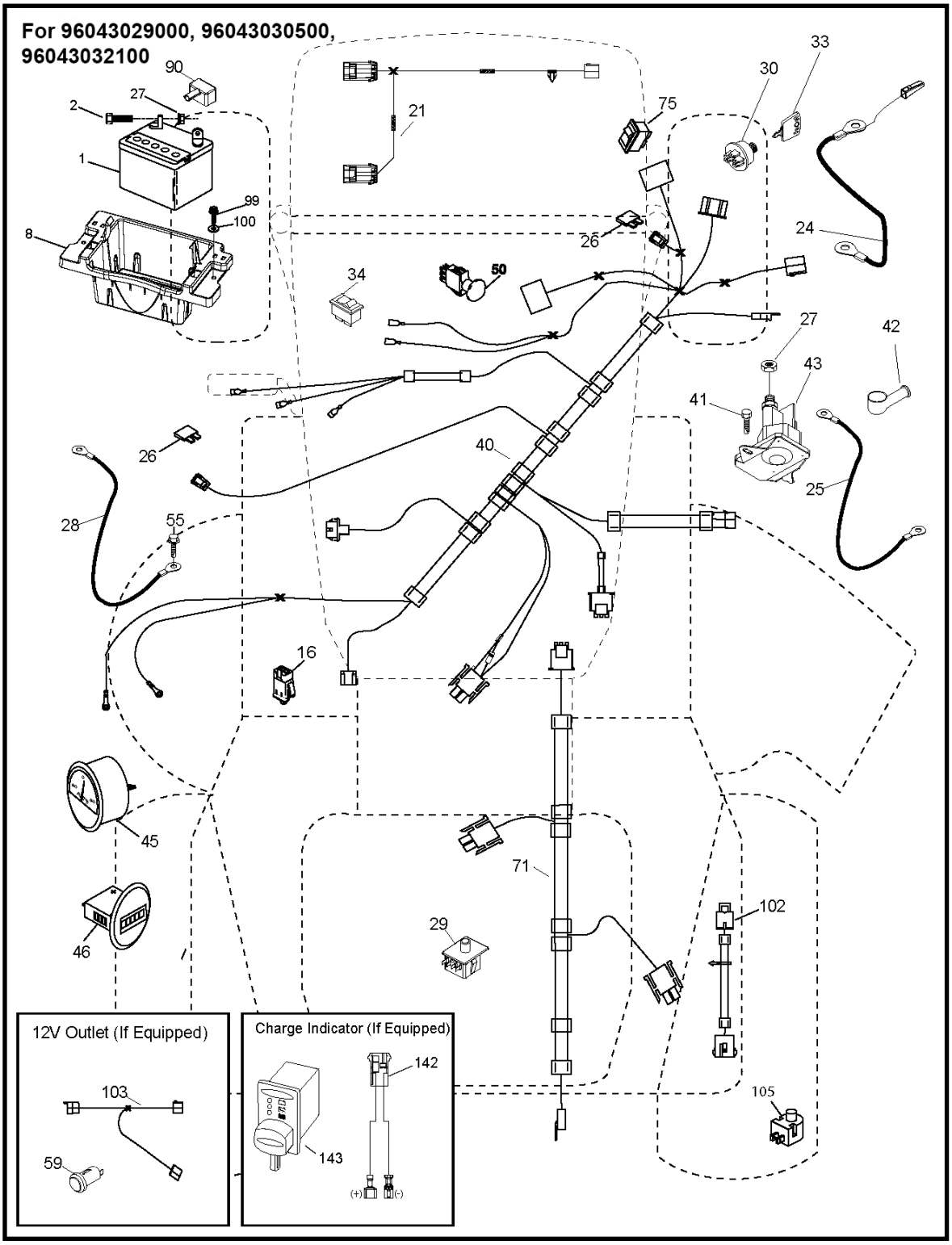

Ref.	Article N.	Description	Qty	Kit
2	580434401	DRAWBAR -	1	-
3	532444481	LOGOTYPE -	1	-
5	590748817	DASHBOARD *For 96043029000*	1	-

Ref.	Article N.	Description	Qty	Kit
5	590748819	DASHBOARD *For 96041041900, 96043030500, 96043032100*	1	-
5	590748822	DASHBOARD *For 96043024500*	1	-
14	532441177	HOOD -	1	-
15	585420301	LENS *LH*	1	-
18	597247301	GRILLE *For 96043032100 and 96043030500*	1	-
18	587523401	GRILLE -	1	-
19	596133201	WASHER *For 96043030500, 96043032100, 96043029000*	1	-
19	596134901	WASHER *For 96043024500, 96041041900, 96043029000*	1	-
25	585420201	LENS *RH*	1	-
36	817060512	SCREW -	1	-
37	532441208	FENDER *For 96043024500, 96043030500, 96043032100*	1	-
37	590534702	FENDER *For 96041041900, 96043029000*	1	-
58	532194314	BRACKET -	1	-
68	596030701	SCREW *For 96043030500, 96043032100, 96043029000*	1	-
68	539990858	SCREW *For 96043024500, 96041041900, 96043029000*	1	-
105	532431882	GUARD -	1	-
125	581684801	CLIP -	1	-
130	532416358	SCREW *For 96043024500, 96041041900, 96043029000*	1	-
130	596321701	SCREW *For 96043030500, 96043032100, 96043029000*	1	-
137	532407590	BUMPER -	1	-
146	581857901	BOLT -	1	-
150	532439774	AIR DUCT	1	-

Ref.	Article N.	Description	Qty	Kit
		-		
151	532436670	BRACKET -	1	-
152	532439870	SHIELD -	1	-
159	817000612	SCREW -	1	-
161	532439929	CONSOLE *For 96043032100*	1	-
161	532401801	CONSOLE *For 96043024500, 96043029000, 96043030500*	1	-
162	596134101	SCREW *For 96043030500, 96043032100, 96043029000*	1	-
162	532142432	SCREW *For 96043024500, 96041041900, 96043029000*	1	-
165	532194330	SUPPORT -	1	-
175	590607702	CROSS MEMBER -	1	-
176	532400776	SCREW -	1	-
177	532195228	BUSHING -	1	-
179	532168937	WASHER -	1	-
180	593346301	CHASSIS -	1	-
182	532406859	DASH -	1	-
183	595305701	SCREW *For 96043030500, 96043032100, 96043029000*	1	-
183	874520520	BOLT *For 96043024500, 96041041900, 96043029000*	1	-
189	817000512	SCREW -	1	-
191	586182801	REFLECTOR -	1	-
194	596135701	LOCK NUT *For 96043030500, 96043032100, 96043029000*	1	-
194	873900500	NUT *For 96043024500, 96041041900, 96043029000*	1	-
195	532404137	PLUG *For 96043024500, 96041041900*	1	-

Ref.	Article N.	Description	Qty	Kit
196	532439674	CONSOLE *For 96043024500, 96041041900, 96043029000, 96043030500*	1	-
196	532439716	CONSOLE *For 96043032100*	1	-
199	532198259	PLATE -	1	-
202	532439728	COVER *RH*	1	-
203	532439727	COVER *LH*	1	-
204	587485801	VENT -	1	-
205	532439730	TRIM *RH*	1	-
206	532439729	TRIM *LH*	1	-
207	585420002	BEZEL *RH*	1	-
208	585420102	BEZEL *LH*	1	-
214	532199145	CLIP -	1	-
217	532409167	ROD -	1	-
221	532198909	LENS *LH*	1	-
228	593824001	STUD *For 96043029000, 96043032100*	1	-
228	532195161	STUD -	1	-
235	532406129	SPACER *For 96043024500, 96041041900, 96043029000*	1	-
235	596564201	SPACER *For 96043030500, 96043032100, 96043029000*	1	-
236	873930500	NUT -	1	-
281	817000616	SCREW -	1	-
296	585420501	LIGHT -	1	-
297	586182901	REFLECTOR -	1	-
299	585420401	LIGHT	1	-

Ref.	Article N.	Description	Qty	Kit
		-		
306	873900600	NUT -	1	-
335	532448204	COVER -	1	-
336	532445309	COVER -	1	-
350	532445143	CLIP -	1	-
351	532421734	PEN -	1	-
352	532448634	CLEVIS PIN -	1	-
353	532178062	CLIP -	1	-
354	532448619	SUPPORT -	1	-
354	593196901	SUPPORT *For 96043029000, 96043030500, 96043029000, 96043032100*	1	-
355	532448636	BELLCRANK -	1	-
356	532448693	LINK -	1	-
357	532448684	COMPRESSION SPRING -	1	-
358	580366601	STUD *For 96043024500, 96041041900, 96043029000*	1	-
358	599128101	STUD *For 96043030500, 96043029000, 96043032100*	1	-
359	584393401	ACTUATOR -	1	-
360	532448618	BRACKET -	1	-
361	596564002	BOLT *For 96043030500, 96043032100, 96043029000*	1	-
361	817490610	SCREW *For 96043024500, 96041041900, 96043029000*	1	-
362	532448633	CLEVIS PIN -	1	-
365	532447368	SPACER -	1	-
375	586908201	BUMPER -	1	-

Ref.	Article N.	Description	Qty	Kit
378	590849801	BUSHING -	1	-
379	593206902	PLATE -	1	-
1	581578901	DECAL *For 96043024500, 96043029000, 96043030500*	1	-
1	581579001	DECAL *For 96043024500, 96043029000*	1	-
1	586047302	DECAL *For 96041041900*	1	-
2	589357901	DECAL -	1	-
2	589357902	DECAL *For 96043032100*	1	-
3	592898301	DECAL *For 96043024500*	1	-
4	591164701	DECAL *For 96041041900, 96043029000, 96043030500, 96043032100*	1	-
5	587015101	DECAL *For 96043024500, 96043029000*	1	-
5	597470101	DECAL *For 96043030500, 96043032100*	1	-
6	596024201	DECAL *For 96043030500*	1	-
7	590885101	DECAL *For 96043024500*	1	-
7	593808801	DECAL *For 96041041900, 96043029000, 96043030500, 96043032100*	1	-
8	586978801	DECAL -	1	-
9	591164701	DECAL *For 96041041900, 96043029000, 96043030500, 96043032100*	1	-
10	501082601	DECAL *For 96041041900*	1	-
11	592898301	DECAL *For 96043024500*	1	-
14	591448701	DECAL -	1	-
15	532423829	DECAL *For 96043024500, 96041041900, 96043029000, 96043030500*	1	-
16	581627301	DECAL -	1	-
17	590937401	DECAL	1	-

Ref.	Article N.	Description	Qty	Kit
		For 96043024500, 96043030500, 96043032100		
17	594110601	DECAL *For 96041041900. (582 45 79-01) DECAL.*	1	-
17	596970801	DECAL *For 96043029000*	1	-
30	581579001	DECAL *For 96043024500, 96043029000*	1	-
31	586742201	DECAL *For 96043024500, 96043029000*	1	-
32	581724801	DECAL -	1	-
33	581724802	DECAL *For 96043032100*	1	-
34	532439882	PAD -	1	-
35	532439881	PAD -	1	-
1	900000002	DUMMY PART *TRANSAXLE TUFFTORQ K66ELD (580402201)*	1	-
2	539912757	KEY -	1	-
3	532007563	WASHER -	1	-
7	586935402	HUB -	1	-
9	532140080	BOLT *For 96043024500, 96041041900, 96043029000*	1	-
9	596218701	BOLT *For 96043030500, 96043032100, 96043029000*	1	-
15	596565301	WASHER *For 96043029000, 96043032100*	1	-
15	819131316	WASHER -	1	-
17	532401072	SPRING -	1	-
26	532199679	SPRING -	1	-
29	532407245	ROD -	1	-
33	812000053	E-CLIP -	1	-
35	590605902	ROD *For 96043024500, 96043029000, 96043030500, 96043032100*	1	-

Ref.	Article N.	Description	Qty	Kit
35	583864501	ROD *For 96041041900*	1	-
42	532008883	PEDAL -	1	-
49	596136201	BOLT *For 96043030500, 96043032100, 96043029000*	1	-
49	872110614	BOLT *For 96043024500, 96041041900, 96043029000*	1	-
50	532194327	PULLEY -	1	-
51	873900600	NUT -	1	-
52	532194326	PULLEY -	1	-
56	592855301	DRIVE BELT -	1	-
64	532197865	SHAFT -	1	-
69	583404901	PIN *For 96043024500*	1	-
69	532423303	HAIR PIN COTTER *For 96041041900, 96043029000, 96043030500, 96043032100*	1	-
70	532439661	CONSOLE -	1	-
73	595316601	BOLT *For 96043030500, 96043032100, 96043029000*	1	-
73	874490544	SCREW *For 96043024500, 96041041900, 96043029000*	1	-
74	596134101	SCREW *For 96043030500, 96043032100, 96043029000*	1	-
74	532142432	SCREW *For 96043024500, 96041041900, 96043029000*	1	-
80	589333402	STRAP -	1	-
92	595305701	SCREW -	1	-
99	582404701	ROD -	1	-
116	596135701	LOCK NUT -	1	-
125	817000512	SCREW -	1	-
153	532004497	CLIP	1	-

Ref.	Article N.	Description	Qty	Kit
		-		
159	596029501	PIN *For 96043030500, 96043032100, 96043029000*	1	-
159	876020412	SPLIT PIN *For 96043024500, 96041041900, 96043029000*	1	-
161	532105709	SPRING -	1	-
163	532407246	ROD -	1	-
166	532429164	NUT -	1	-
167	532405257	LATCH -	1	-
170	532194322	KEEPER -	1	-
171	596136301	BOLT -	1	-
177	587225301	PIN *For 96043030500, 96043032100, 96043029000*	1	-
177	532169484	PIN *For 96043024500, 96041041900, 96043029000*	1	-
177	596029401	RETAINER *For 96043030500, 96043032100, 96043029000*	1	-
183	598873002	SPACER *For 96043032100*	1	-
183	587587401	SPACER -	1	-
184	587653701	HANDLE -	1	-
185	872110622	BOLT -	1	-
186	532194321	SPACER -	1	-
187	596135501	WASHER -	1	-
188	582217001	LINK -	1	-
189	532194317	PLATE -	1	-
190	532194318	BELT GUIDE -	1	-
196	817000616	SCREW -	1	-

Ref.	Article N.	Description	Qty	Kit
197	585658601	CLUTCH *For 96043024500, 96041041900*	1	-
197	587402001	BRACKET *For 96043029000*	1	-
197	585658602	BOSS *For 96043030500, 96043032100, 96043029000*	1	-
205	532123800	WASHER -	1	-
206	532448596	BRACKET -	1	-
207	587031402	LATCH *For 96043030500, 96043032100, 96043029000*	1	-
207	587031401	LATCH *For 96043024500, 96041041900, 96043029000*	1	-
208	532197869	SUPPORT *For 96043024500, 96041041900, 96043029000*	1	-
208	596564101	GEAR *For 96043030500, 96043032100, 96043029000*	1	-
209	590527802	ROD *For 96043024500, 96043029000, 96043030500, 96043032100*	1	-
209	532199592	ROD *For 96041041900*	1	-
210	532197860	ARM *RH*	1	-
211	532120183	BEARING -	1	-
213	532403119	CONTROL -	1	-
214	532421263	PAD -	1	-
215	586606502	PEDAL -	1	-
220	532198908	LENS *RH*	1	-
221	532403187	SPRING -	1	-
222	879212010	WASHER -	1	-
225	532407311	KEEPER -	1	-
226	532407109	BRACKET -	1	-
282	874490548	BOLT	1	-

Ref.	Article N.	Description	Qty	Kit
		-		
366	580626201	BRACKET *For 96043024500, 96041041900*	1	-
366	580626202	BRACKET *For 96043029000, 96043030500, 96043032100*	1	-
366	592878002	BRACKET *For 96043029000, 96043032100*	1	-
1	532163465	BATTERY -	1	-
2	874760412	BOLT -	1	-
8	587205101	TRAY -	1	-
16	532176138	MICRO SWITCH -	1	-
21	532400252	HARNESS *For 96043024500*	1	-
21	585436401	HARNESS *For 96041041900*	1	-
24	585555601	CABLE *For 96043024500*	1	-
24	590223801	PRIMARY CABLE *For 96041041900*	1	-
25	585555501	CABLE -	1	-
26	532175158	FUSE -	1	-
27	586668901	NUT -	1	-
28	532416588	CABLE *For 96043024500*	1	-
28	590223702	GROUND CABLE *For 96041041900*	1	-
29	532401545	SWITCH *For 96043024500*	1	-
29	587648401	SWITCH *For 96041041900*	1	-
30	532193350	IGNITION MODULE -	1	-
33	532411935	KEY *For 96041041900*	1	-
33	532411933	KEY *For 96043024500*	1	-

Ref.	Article N.	Description	Qty	Kit
34	532110712	SWITCH -	1	-
40	501133101	HARNESS *For 96043024500*	1	-
40	590193201	WIRING ASSY *For 96041041900*	1	-
41	817720408	SCREW -	1	-
42	532131563	COVER -	1	-
43	582042801	SOLENOID -	1	-
45	590645901	GAUGE *For 96041041900*	1	-
45	587553903	GAUGE *For 96043024500*	1	-
46	594721501	GAUGE *For 96041041900*	1	-
46	587554003	GAUGE *For 96043024500*	1	-
50	582107601	SWITCH -	1	-
55	817060512	SCREW -	1	-
71	532194276	CABLE ASSY *For 96043024500*	1	-
71	590193302	WIRING ASSY *For 96041041900*	1	-
75	580366401	SWITCH *For 96041041900*	1	-
90	532435395	TERMINAL COVER -	1	-
99	817670412	SCREW -	1	-
100	819091416	WASHER -	1	-
102	532404454	CABLE -	1	-
105	532407568	SWITCH *For 96043024500*	1	-
144	590568001	CONTROL UNIT -	1	-
146	590193401	WIRING ASSY	1	-

Ref.	Article N.	Description	Qty	Kit
		-		
1	532163465	BATTERY -	1	-
2	874760412	BOLT -	1	-
8	532414126	TRAY *For 96043030500*	1	-
8	587205101	TRAY *For 96043029000, 96043032100*	1	-
16	532176138	MICRO SWITCH -	1	-
21	585436401	HARNESS -	1	-
24	585555601	CABLE -	1	-
25	585555501	CABLE -	1	-
26	532175158	FUSE -	1	-
27	586668901	NUT *For 96043029000*	1	-
27	596133601	LOCK NUT *For 96043030500, 96043032100, 96043029000*	1	-
28	532416588	CABLE -	1	-
29	532192749	SWITCH -	1	-
30	532193350	IGNITION MODULE -	1	-
33	532411935	KEY -	1	-
34	532110712	SWITCH -	1	-
40	501133601	HARNESS -	1	-
41	817720408	SCREW -	1	-
42	532131563	COVER -	1	-
43	582042801	SOLENOID *For 96043029000*	1	-
43	582042802	SOLENOID *For 96043030500, 96043032100, 96043029000*	1	-

Ref.	Article N.	Description	Qty	Kit
45	587553903	GAUGE *For 96043029000*	1	-
45	587553906	GAUGE *For 96043030500, 96043032100, 96043029000*	1	-
46	587554003	GAUGE *For 96043029000*	1	-
46	587554006	GAUGE *For 96043030500, 96043032100, 96043029000*	1	-
50	582107601	SWITCH -	1	-
50	582107602	SWITCH *for all models*	1	-
55	817060512	SCREW -	1	-
59	532400303	ELECTRICAL SYSTEM *For 96043029000*	1	-
59	596941001	RECEPTACLE *For 96043030500, 96043032100, 96043029000*	1	-
71	580513001	HARNESS -	1	-
75	580366401	SWITCH -	1	-
90	532435395	TERMINAL COVER -	1	-
99	817670412	SCREW -	1	-
100	596135301	WASHER *For 96043030500, 96043032100, 96043029000*	1	-
100	819091416	WASHER *For 96043029000*	1	-
102	532404454	CABLE -	1	-
103	532421747	HARNESS -	1	-
105	532407568	SWITCH -	1	-
1	900000002	DUMMY PART *Engine Kohler Model No. KT745-3093 (596957201) For 96043029000*	1	-
2	589818701	MUFFLER	1	-
9	501832602	KEEPER	1	-
9	596501502	KEEPER	1	-
11	587241401	CLUTCH	1	-

Ref.	Article N.	Description	Qty	Kit
12	586899601	PULLEY	1	-
15	532438030	FUEL TANK ASSY *Fits 2.75 filler neck*	1	-
15	532438024	FUEL TANK ASSY *Fits 2.75 filler neck*	1	-
18	529989702	CAP *Fits 2.00 filler neck*	1	-
18	529989703	CAP *Fits 2.00 filler neck*	1	-
18	585124801	FUEL CAP ASSY *Fits 2.75 filler neck*	1	-
20	532424341	THROTTLE CONTROL	1	-
21	532416358	SCREW	1	-
21	596321701	SCREW	1	-
28	532401135	LINE	1	-
29	532137180	SPARK ARRESTER	1	-
37	532123487	HOSE CLAMP	1	-
41	532126197	WASHER	1	-
42	596238901	WASHER	1	-
42	539990247	WASHER	1	-
45	586668901	NUT	1	-
45	596133601	LOCK NUT	1	-
62	532434017	SHIELD	1	-
69	532178151	GASKET	1	-
70	583955601	TUBE *LH*	1	-
71	583955701	TUBE *RH*	1	-
81	532148456	TUBE	1	-
82	532428287	PLUG	1	-
85	501606901	BOLT	1	-
86	532184362	NUT	1	-
90	817000616	SCREW	1	-
91	532187495	BUSHING	1	-
92	817120616	SCREW	1	-
102	817000512	SCREW	1	-
116	539132624	KNOB	1	-
117	532420828	VALVE FUEL RESERVE	1	-
1	588549002	DECK SHELL ASSY *For 96043024500, 96041041900*	1	-

Ref.	Article N.	Description	Qty	Kit
1	592618801	SERVICE KIT *For 96043029000, 96043030500, 96043032100*	1	-
1	592618901	SERVICE KIT *For 96041041900, 96043029000, 96043030500, 96043032100*	1	-
6	590304303	COVER -	1	-
7	590304203	COVER *For 96043024500, 96041041900, 96043030500, 96043032100, 96043029000*	1	-
8	532193003	SCREW -	1	-
11	582760508	BLADE *For 96043029000, 96043032100*	1	-
11	582760502	BLADE *For 96043024500, 96041041900, 96043030500, 96043029000, 96043032100*	1	-
14	539131898	SPINDLE *Aluminium*	1	-
20	532197236	SPACER -	1	-
22	596564003	BOLT -	1	-
22	599972501	BOLT *For 96043030500*	1	-
23	588438301	SCREW -	1	-
24	532105304	HUB CAP -	1	-
25	587354701	SPRING -	1	-
26	532110452	NUT -	1	-
27	590632201	DEFLECTOR ASSY -	1	-
28	596240801	BOLT *For 96043030500, 96043032100, 96043029000*	1	-
28	539115574	EYE BOLT *For 96043024500, 96041041900, 96043029000*	1	-
29	532131491	SHAFT *For 96043024500, 96041041900, 96043029000*	1	-
29	595297001	ROD *For 96043030500, 96043032100, 96043029000*	1	-
31	532187690	WASHER -	1	-
32	532173435	PULLEY	1	-

Ref.	Article N.	Description	Qty	Kit
		For 96043024500, 96041041900, 96043029000		
32	532173436	PULLEY *For 96043030500, 96043032100*	1	-
33	596134801	HEXAGON NUT *For 96043030500, 96043032100, 96043029000*	1	-
33	532400234	NUT *For 96043024500, 96041041900, 96043029000*	1	-
34	596322601	NUT *For 96043030500, 96043032100, 96043024500, 96043029000*	1	-
34	873680600	NUT *For 96041041900, 96043029000*	1	-
36	596039201	LOCK NUT *For 96043030500, 96043032100, 96043029000*	1	-
36	539990585	NUT *For 96043024500, 96041041900, 96043029000*	1	-
37	532170165	BOLT -	1	-
41	584953901	BOLT -	1	-
42	596952201	PLUG *For 96043024500, 96041041900, 96043030500, 96043029000, 96043032100*	1	-
43	582219602	ARM -	1	-
46	532137729	SCREW -	1	-
47	582236301	DRIVE BELT -	1	-
48	574196502	TUBE -	1	-
49	873900600	NUT -	1	-
51	574169601	ROLLER -	1	-
52	532197379	PULLEY -	1	-
53	872140864	BOLT *For 96043024500, 96041041900, 96043029000*	1	-
53	594944501	BOLT *For 96043030500, 96043032100, 96043029000*	1	-
54	521991101	NUT *For 96043024500, 96041041900, 96043029000, 96043032100*	1	-
54	521991102	NUT *For 96043030500, 96043029000, 96043032100*	1	-

Ref.	Article N.	Description	Qty	Kit
61	596274401	ROD *For 96043030500, 96043032100, 96043029000*	1	-
61	532400337	TIGE ANTI-ROULIS *For 96043024500, 96041041900, 96043029000*	1	-
62	596133201	WASHER *For 96043030500, 96043032100, 96043029000*	1	-
62	596134901	WASHER *For 96043024500, 96041041900, 96043029000*	1	-
63	532194208	PIN -	1	-
66	590732501	BUMPER ASSY -	1	-
97	532178515	WASHER -	1	-
98	587358401	SPRING -	1	-
109	532416405	COUPLING -	1	-
116	596434404	BOLT -	1	-
117	589527301	WHEEL -	1	-
184	596135701	LOCK NUT *For 96043029000*	1	-
187	593824001	STUD *For 96043029000, 96043030500, 96043032100*	1	-
187	532195161	STUD -	1	-
189	532195185	ARM *For 96043024500*	1	-
189	587140502	ARM *For 96041041900, 96043029000, 96043030500, 96043032100*	1	-
190	532196539	BOLT -	1	-
192	532198468	BELT GUIDE -	1	-
196	872140620	BOLT *For 96043024500, 96041041900*	1	-
196	596337801	BOLT *For 96043030500, 96043029000, 96043032100*	1	-
196	539128101	BOLT *For 96043029000, 96043032100*	1	-
242	532415598	HOSE COUPLING	1	-

Ref.	Article N.	Description	Qty	Kit
		-		
2	532422027	SHAFT -	1	-
3	596270601	LEVER *For 96043030500, 96043032100, 96043029000*	1	-
3	532195230	LEVER *For 96043024500, 96041041900, 96043029000*	1	-
7	580962301	GRIP -	1	-
10	532196314	SPRING -	1	-
41	532175994	NUT *For 96043024500, 96041041900, 96043029000*	1	-
41	589464902	NUT *For 96043030500, 96043032100, 96043029000*	1	-
87	532194209	SPRING -	1	-
88	532195301	SPRING *For 96043029000, 96043030500, 96043032100*	1	-
88	532195304	SPRING -	1	-
89	819191912	WASHER -	1	-
91	532403407	LINK *For 96043024500, 96041041900, 96043029000*	1	-
91	589464805	LINK ASSY *For 96043030500, 96043032100, 96043029000*	1	-
96	532195263	BUSHING *For 96043024500, 96041041900, 96043029000*	1	-
96	593842101	BUSHING *For 96043030500, 96043032100, 96043029000*	1	-
97	817000612	SCREW -	1	-
98	589318703	DECK ATTACHMENT -	1	-
114	873360700	NUT -	1	-
1	900000002	DUMMY PART	1	-
1	588556701	SEAT *For 96043024500*	1	-
1	590337301	SEAT *For 96043030500, 96043032100*	1	-
1	590337302	SEAT	1	-

Ref.	Article N.	Description	Qty	Kit
		For 96041041900, 96043029000		
2	590336602	BRACKET -	1	-
3	590777602	BRACKET -	1	-
6	521996501	NUT *For 96043024500, 96041041900, 96043029000*	1	-
6	521996502	NUT *For 96043030500, 96043032100, 96043029000*	1	-
7	590812301	SPRING -	1	-
8	532171877	BOLT -	1	-
10	590481702	BRACKET -	1	-
19	590691501	KNOB -	1	-
21	596231101	BOLT -	1	-
37	594944401	NUT *For 96043029000, 96043030500, 96043032100*	1	-
37	539112899	NUT, 5/16-18, NYLOC -	1	-
42	532199371	WASHER -	1	-
47	590351101	WASHER -	1	-
1	532439740	STEERING WHEEL *For 96043024500, 96041041900, 96043029000*	1	-
1	597866101	SERVICE KIT *For 96043030500, 96043032100. Steering wheel and steering cap.*	1	-
2	532195968	SHAFT *FRONT*	1	-
4	532403089	SPINDLE SHAFT *LH*	1	-
5	532403090	SPINDLE SHAFT *RH*	1	-
6	532006266	WASHER -	1	-
7	532121748	WASHER -	1	-
8	812000029	RETAINER RING -	1	-

Ref.	Article N.	Description	Qty	Kit
9	532121232	HUB CAP -	1	-
13	532121749	WASHER -	1	-
14	596238701	WASHER *For 96043030500, 96043032100, 96043029000*	1	-
14	539990118	WASHER *For 96043024500, 96041041900, 96043029000*	1	-
15	873540600	NUT -	1	-
16	587016002	SHAFT -	1	-
19	532194729	PLATE -	1	-
21	586840201	ADAPTER -	1	-
22	585029901	BEARING -	1	-
26	532439743	HUB CAP *For 96043024500, 96041041900, 96043029000*	1	-
26	594949101	CAP *For 96043030500, 96043032100*	1	-
27	596933401	WASHER *For 96043030500, 96043032100, 96043029000*	1	-
27	819211616	WASHER *For 96043024500, 96041041900, 96043029000*	1	-
28	817000612	SCREW *For 96041041900, 96043029000, 96043030500, 96043032100*	1	-
29	817000612	SCREW *For 96041041900, 96043029000, 96043030500, 96043032100*	1	-
35	532194732	PLATE -	1	-
45	587016401	WASHER -	1	-
50	873900600	NUT -	1	-
53	532188967	WASHER -	1	-
54	874760636	BOLT -	1	-
55	532414736	SPACER -	1	-
58	532194747	BOLT	1	-

Ref.	Article N.	Description	Qty	Kit
		-		
59	532194748	WASHER -	1	-
60	873971000	NUT -	1	-
61	588794402	LINK ASSY *For 96043024500, 96041041900, 96043029000. LH.*	1	-
61	597070202	LINKAGE *For 96043030500, 96043032100, 96043029000. LH.*	1	-
62	588794502	LINK ASSY *For 96043024500, 96041041900, 96043029000. RH.*	1	-
62	597070302	LINKAGE *For 96043030500, 96043032100, 96043029000. RH.*	1	-
63	817000512	SCREW -	1	-
64	532199849	SPRING RETAINER -	1	-
65	532194734	BRACKET *FRONT*	1	-
66	871020748	BOLT -	1	-
67	532194737	BUSHING *FRONT*	1	-
68	873900700	NUT -	1	-
69	532199162	WASHER -	1	-
70	585338801	BRACKET -	1	-
75	587738906	KIT *Includes pinion and screw*	1	-
76	580683601	SCREW -	1	-
78	532057079	WASHER -	1	-
122	532444962	CAP -	1	-
1	532059192	CAP -	1	-
2	532065139	NIPPLE -	1	-
3	532181839	RIM ASSY *Front*	1	-

Ref.	Article N.	Description	Qty	Kit
4	532008134	HOSE *Front (Service Item Only)*	1	-
5	532161024	TIRE *For 96043024500. FRONT (16 X 6.5-8).*	1	-
5	593145101	TIRE *For 96041041900, 96043029000, 96043030500, 96043032100. FRONT (16 X 6.5-8).*	1	-
6	532000278	NIPPLE *Front Wheel Only*	1	-
7	532009040	BEARING *Front Wheel Only*	1	-
8	532175039	HUB CAP *Front Wheel Only*	1	-
9	532170453	TIRE *For 96043024500. REAR (23 X 10.5-12).*	1	-
9	593145201	TIRE *For 96041041900, 96043029000, 96043030500, 96043032100. REAR (23 X 10.5-12).*	1	-
10	532007154	HOSE *Rear (Service Item Only*	1	-
11	532144510	WHEEL *For 96043024500, 96041041900, 96043029000. Rear.*	1	-
11	593144801	TIRE *For 96043030500, 96043032100. Rear.*	1	-
12	501503101	CAP -	1	-
16	532144334	SEALING FOAM *For 96043030500*	1	-
1	900000002	DUMMY PART *ENGINE KAWA MODEL NO. FR730V-ES04 (445363)*	1	-
2	589818701	MUFFLER -	1	-
9	501832602	KEEPER -	1	-
9	596501502	KEEPER *For 96043030500, 96043032100*	1	-
11	587241401	CLUTCH -	1	-
12	532194343	PULLEY -	1	-
15	532422909	FUEL TANK *Fits 2.75 filler neck. For 96043030500*	1	-
15	598732401	FUEL TANK	1	-

Ref.	Article N.	Description	Qty	Kit
		Fits 2.75 filler neck. For 96043032100		
15	590599402	TANK *Fits 2.75 filler neck. For 96043024500, 96041041900*	1	-
18	597478501	FUEL CAP ASSY *Fits 2.75 filler neck. For 96043030500*	1	-
18	529989702	CAP *Fits 2.00 filler neck*	1	-
18	529989703	CAP *Fits 2.00 filler neck*	1	-
18	585124801	FUEL CAP ASSY *Fits 2.75 filler neck. For 96043024500, 96041041900, 96043032100*	1	-
18	599502201	FUEL CAP ASSY *Fits 2.75 filler neck. For 96043030500*	1	-
20	532424341	THROTTLE CONTROL -	1	-
21	532416358	SCREW *For 96043024500, 96041041900*	1	-
21	596321701	SCREW *For 96043030500, 96043032100*	1	-
22	532189541	CHOKE CONTROL -	1	-
28	532401135	LINE *For 96043030500*	1	-
29	532137180	SPARK ARRESTER -	1	-
30	532401135	LINE *For 96043030500*	1	-
37	532123487	HOSE CLAMP *For 96043030500*	1	-
38	532123487	HOSE CLAMP *For 96043030500*	1	-
41	532126197	WASHER -	1	-
42	596238901	WASHER *For 96043030500, 96043032100*	1	-
42	539990247	WASHER *For 96043024500, 96041041900*	1	-
45	586668901	NUT *For 96043024500, 96041041900*	1	-
45	596133601	LOCK NUT *For 96043030500, 96043032100*	1	-
62	532434017	SHIELD -	1	-

Ref.	Article N.	Description	Qty	Kit
69	532178151	GASKET -	1	-
70	583955601	TUBE *LH*	1	-
71	583955701	TUBE *RH*	1	-
81	532148456	TUBE -	1	-
85	501606901	BOLT -	1	-
86	532184362	NUT -	1	-
90	817000616	SCREW -	1	-
91	532187495	BUSHING -	1	-
92	817120616	SCREW -	1	-
102	817000512	SCREW -	1	-
109	532414114	FILTER *For 96043030500*	1	-
110	532414118	VALVE ASSY *For 96043030500*	1	-
112	532401135	LINE *For 96043030500*	1	-
113	532414127	VALVE *For 96043030500*	1	-
116	539132624	KNOB -	1	-
117	532420828	VALVE FUEL RESERVE *For 96043030500, 96043032100*	1	-
138	532420718	PURGE *For 96043030500*	1	-
138	596941501	TUBE *For 96043030500*	1	-
143	590044401	SENSOR *For 96043024500, 96041041900*	1	-

ENGINE

For 96043029000

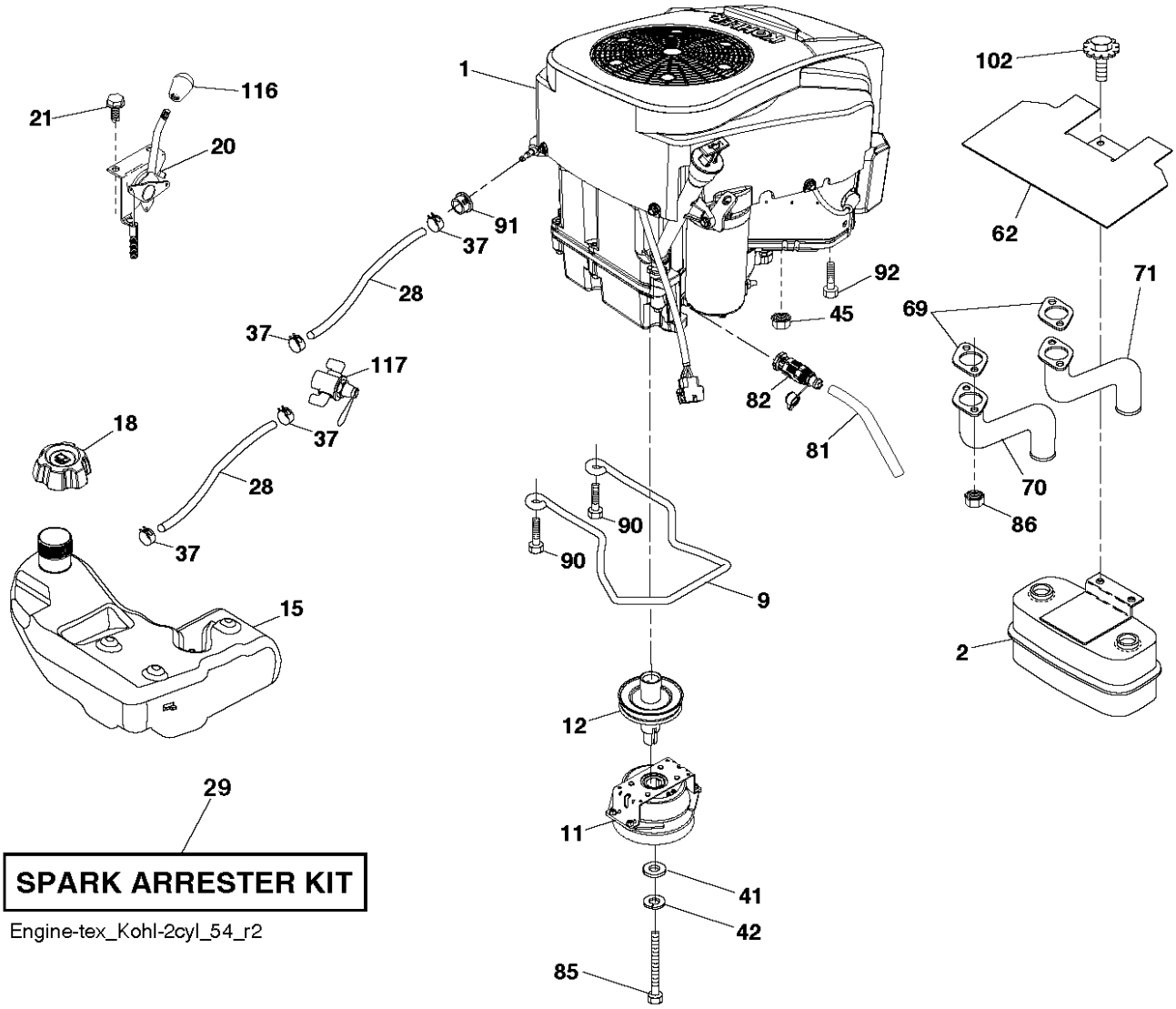

Engine-tex_Kohl-2cyl_54_r2

Ref.	Article N.	Description	Qty	Kit
2	580434401	DRAWBAR -	1	-
3	532444481	LOGOTYPE -	1	-
5	590748817	DASHBOARD *For 96043029000*	1	-
5	590748819	DASHBOARD *For 96041041900, 96043030500, 96043032100*	1	-
5	590748822	DASHBOARD *For 96043024500*	1	-
14	532441177	HOOD -	1	-
15	585420301	LENS *LH*	1	-

Ref.	Article N.	Description	Qty	Kit
18	597247301	GRILLE *For 96043032100 and 96043030500*	1	-
18	587523401	GRILLE -	1	-
19	596133201	WASHER *For 96043030500, 96043032100, 96043029000*	1	-
19	596134901	WASHER *For 96043024500, 96041041900, 96043029000*	1	-
25	585420201	LENS *RH*	1	-
36	817060512	SCREW -	1	-
37	532441208	FENDER *For 96043024500, 96043030500, 96043032100*	1	-
37	590534702	FENDER *For 96041041900, 96043029000*	1	-
58	532194314	BRACKET -	1	-
68	596030701	SCREW *For 96043030500, 96043032100, 96043029000*	1	-
68	539990858	SCREW *For 96043024500, 96041041900, 96043029000*	1	-
105	532431882	GUARD -	1	-
125	581684801	CLIP -	1	-
130	532416358	SCREW *For 96043024500, 96041041900, 96043029000*	1	-
130	596321701	SCREW *For 96043030500, 96043032100, 96043029000*	1	-
137	532407590	BUMPER -	1	-
146	581857901	BOLT -	1	-
150	532439774	AIR DUCT -	1	-
151	532436670	BRACKET -	1	-
152	532439870	SHIELD -	1	-
159	817000612	SCREW -	1	-
161	532439929	CONSOLE	1	-

Ref.	Article N.	Description	Qty	Kit
		For 96043032100		
161	532401801	CONSOLE *For 96043024500, 96043029000, 96043030500*	1	-
162	596134101	SCREW *For 96043030500, 96043032100, 96043029000*	1	-
162	532142432	SCREW *For 96043024500, 96041041900, 96043029000*	1	-
165	532194330	SUPPORT -	1	-
175	590607702	CROSS MEMBER -	1	-
176	532400776	SCREW -	1	-
177	532195228	BUSHING -	1	-
179	532168937	WASHER -	1	-
180	593346301	CHASSIS -	1	-
182	532406859	DASH -	1	-
183	595305701	SCREW *For 96043030500, 96043032100, 96043029000*	1	-
183	874520520	BOLT *For 96043024500, 96041041900, 96043029000*	1	-
189	817000512	SCREW -	1	-
191	586182801	REFLECTOR -	1	-
194	596135701	LOCK NUT *For 96043030500, 96043032100, 96043029000*	1	-
194	873900500	NUT *For 96043024500, 96041041900, 96043029000*	1	-
195	532404137	PLUG *For 96043024500, 96041041900*	1	-
196	532439674	CONSOLE *For 96043024500, 96041041900, 96043029000, 96043030500*	1	-
196	532439716	CONSOLE *For 96043032100*	1	-
199	532198259	PLATE -	1	-
202	532439728	COVER *RH*	1	-

Ref.	Article N.	Description	Qty	Kit
203	532439727	COVER *LH*	1	-
204	587485801	VENT -	1	-
205	532439730	TRIM *RH*	1	-
206	532439729	TRIM *LH*	1	-
207	585420002	BEZEL *RH*	1	-
208	585420102	BEZEL *LH*	1	-
214	532199145	CLIP -	1	-
217	532409167	ROD -	1	-
221	532198909	LENS *LH*	1	-
228	593824001	STUD *For 96043029000, 96043032100*	1	-
228	532195161	STUD -	1	-
235	532406129	SPACER *For 96043024500, 96041041900, 96043029000*	1	-
235	596564201	SPACER *For 96043030500, 96043032100, 96043029000*	1	-
236	873930500	NUT -	1	-
281	817000616	SCREW -	1	-
296	585420501	LIGHT -	1	-
297	586182901	REFLECTOR -	1	-
299	585420401	LIGHT -	1	-
306	873900600	NUT -	1	-
335	532448204	COVER -	1	-
336	532445309	COVER -	1	-
350	532445143	CLIP	1	-

Ref.	Article N.	Description	Qty	Kit
		-		
351	532421734	PEN -	1	-
352	532448634	CLEVIS PIN -	1	-
353	532178062	CLIP -	1	-
354	532448619	SUPPORT -	1	-
354	593196901	SUPPORT *For 96043029000, 96043030500, 96043029000, 96043032100*	1	-
355	532448636	BELLCRANK -	1	-
356	532448693	LINK -	1	-
357	532448684	COMPRESSION SPRING -	1	-
358	580366601	STUD *For 96043024500, 96041041900, 96043029000*	1	-
358	599128101	STUD *For 96043030500, 96043029000, 96043032100*	1	-
359	584393401	ACTUATOR -	1	-
360	532448618	BRACKET -	1	-
361	596564002	BOLT *For 96043030500, 96043032100, 96043029000*	1	-
361	817490610	SCREW *For 96043024500, 96041041900, 96043029000*	1	-
362	532448633	CLEVIS PIN -	1	-
365	532447368	SPACER -	1	-
375	586908201	BUMPER -	1	-
378	590849801	BUSHING -	1	-
379	593206902	PLATE -	1	-
1	581578901	DECAL *For 96043024500, 96043029000, 96043030500*	1	-
1	581579001	DECAL *For 96043024500, 96043029000*	1	-

Ref.	Article N.	Description	Qty	Kit
1	586047302	DECAL *For 96041041900*	1	-
2	589357901	DECAL -	1	-
2	589357902	DECAL *For 96043032100*	1	-
3	592898301	DECAL *For 96043024500*	1	-
4	591164701	DECAL *For 96041041900, 96043029000, 96043030500, 96043032100*	1	-
5	587015101	DECAL *For 96043024500, 96043029000*	1	-
5	597470101	DECAL *For 96043030500, 96043032100*	1	-
6	596024201	DECAL *For 96043030500*	1	-
7	590885101	DECAL *For 96043024500*	1	-
7	593808801	DECAL *For 96041041900, 96043029000, 96043030500, 96043032100*	1	-
8	586978801	DECAL -	1	-
9	591164701	DECAL *For 96041041900, 96043029000, 96043030500, 96043032100*	1	-
10	501082601	DECAL *For 96041041900*	1	-
11	592898301	DECAL *For 96043024500*	1	-
14	591448701	DECAL -	1	-
15	532423829	DECAL *For 96043024500, 96041041900, 96043029000, 96043030500*	1	-
16	581627301	DECAL -	1	-
17	590937401	DECAL *For 96043024500, 96043030500, 96043032100*	1	-
17	594110601	DECAL *For 96041041900. (582 45 79-01) DECAL.*	1	-
17	596970801	DECAL *For 96043029000*	1	-
30	581579001	DECAL *For 96043024500, 96043029000*	1	-
31	586742201	DECAL	1	-

Ref.	Article N.	Description	Qty	Kit
		For 96043024500, 96043029000		
32	581724801	DECAL -	1	-
33	581724802	DECAL *For 96043032100*	1	-
34	532439882	PAD -	1	-
35	532439881	PAD -	1	-
1	900000002	DUMMY PART *TRANSAXLE TUFFTORQ K66ELD (580402201)*	1	-
2	539912757	KEY -	1	-
3	532007563	WASHER -	1	-
7	586935402	HUB -	1	-
9	532140080	BOLT *For 96043024500, 96041041900, 96043029000*	1	-
9	596218701	BOLT *For 96043030500, 96043032100, 96043029000*	1	-
15	596565301	WASHER *For 96043029000, 96043032100*	1	-
15	819131316	WASHER -	1	-
17	532401072	SPRING -	1	-
26	532199679	SPRING -	1	-
29	532407245	ROD -	1	-
33	812000053	E-CLIP -	1	-
35	590605902	ROD *For 96043024500, 96043029000, 96043030500, 96043032100*	1	-
35	583864501	ROD *For 96041041900*	1	-
42	532008883	PEDAL -	1	-
49	596136201	BOLT *For 96043030500, 96043032100, 96043029000*	1	-
49	872110614	BOLT *For 96043024500, 96041041900, 96043029000*	1	-

Ref.	Article N.	Description	Qty	Kit
50	532194327	PULLEY -	1	-
51	873900600	NUT -	1	-
52	532194326	PULLEY -	1	-
56	592855301	DRIVE BELT -	1	-
64	532197865	SHAFT -	1	-
69	583404901	PIN *For 96043024500*	1	-
69	532423303	HAIR PIN COTTER *For 96041041900, 96043029000, 96043030500, 96043032100*	1	-
70	532439661	CONSOLE -	1	-
73	595316601	BOLT *For 96043030500, 96043032100, 96043029000*	1	-
73	874490544	SCREW *For 96043024500, 96041041900, 96043029000*	1	-
74	596134101	SCREW *For 96043030500, 96043032100, 96043029000*	1	-
74	532142432	SCREW *For 96043024500, 96041041900, 96043029000*	1	-
80	589333402	STRAP -	1	-
92	595305701	SCREW -	1	-
99	582404701	ROD -	1	-
116	596135701	LOCK NUT -	1	-
125	817000512	SCREW -	1	-
153	532004497	CLIP -	1	-
159	596029501	PIN *For 96043030500, 96043032100, 96043029000*	1	-
159	876020412	SPLIT PIN *For 96043024500, 96041041900, 96043029000*	1	-
161	532105709	SPRING -	1	-
163	532407246	ROD	1	-

Ref.	Article N.	Description	Qty	Kit
		-		
166	532429164	NUT -	1	-
167	532405257	LATCH -	1	-
170	532194322	KEEPER -	1	-
171	596136301	BOLT -	1	-
177	587225301	PIN *For 96043030500, 96043032100, 96043029000*	1	-
177	532169484	PIN *For 96043024500, 96041041900, 96043029000*	1	-
177	596029401	RETAINER *For 96043030500, 96043032100, 96043029000*	1	-
183	598873002	SPACER *For 96043032100*	1	-
183	587587401	SPACER -	1	-
184	587653701	HANDLE -	1	-
185	872110622	BOLT -	1	-
186	532194321	SPACER -	1	-
187	596135501	WASHER -	1	-
188	582217001	LINK -	1	-
189	532194317	PLATE -	1	-
190	532194318	BELT GUIDE -	1	-
196	817000616	SCREW -	1	-
197	585658601	CLUTCH *For 96043024500, 96041041900*	1	-
197	587402001	BRACKET *For 96043029000*	1	-
197	585658602	BOSS *For 96043030500, 96043032100, 96043029000*	1	-
205	532123800	WASHER -	1	-

Ref.	Article N.	Description	Qty	Kit
206	532448596	BRACKET -	1	-
207	587031402	LATCH *For 96043030500, 96043032100, 96043029000*	1	-
207	587031401	LATCH *For 96043024500, 96041041900, 96043029000*	1	-
208	532197869	SUPPORT *For 96043024500, 96041041900, 96043029000*	1	-
208	596564101	GEAR *For 96043030500, 96043032100, 96043029000*	1	-
209	590527802	ROD *For 96043024500, 96043029000, 96043030500, 96043032100*	1	-
209	532199592	ROD *For 96041041900*	1	-
210	532197860	ARM *RH*	1	-
211	532120183	BEARING -	1	-
213	532403119	CONTROL -	1	-
214	532421263	PAD -	1	-
215	586606502	PEDAL -	1	-
220	532198908	LENS *RH*	1	-
221	532403187	SPRING -	1	-
222	879212010	WASHER -	1	-
225	532407311	KEEPER -	1	-
226	532407109	BRACKET -	1	-
282	874490548	BOLT -	1	-
366	580626201	BRACKET *For 96043024500, 96041041900*	1	-
366	580626202	BRACKET *For 96043029000, 96043030500, 96043032100*	1	-
366	592878002	BRACKET *For 96043029000, 96043032100*	1	-
1	532163465	BATTERY	1	-

Ref.	Article N.	Description	Qty	Kit
		-		
2	874760412	BOLT -	1	-
8	587205101	TRAY -	1	-
16	532176138	MICRO SWITCH -	1	-
21	532400252	HARNESS *For 96043024500*	1	-
21	585436401	HARNESS *For 96041041900*	1	-
24	585555601	CABLE *For 96043024500*	1	-
24	590223801	PRIMARY CABLE *For 96041041900*	1	-
25	585555501	CABLE -	1	-
26	532175158	FUSE -	1	-
27	586668901	NUT -	1	-
28	532416588	CABLE *For 96043024500*	1	-
28	590223702	GROUND CABLE *For 96041041900*	1	-
29	532401545	SWITCH *For 96043024500*	1	-
29	587648401	SWITCH *For 96041041900*	1	-
30	532193350	IGNITION MODULE -	1	-
33	532411935	KEY *For 96041041900*	1	-
33	532411933	KEY *For 96043024500*	1	-
34	532110712	SWITCH -	1	-
40	501133101	HARNESS *For 96043024500*	1	-
40	590193201	WIRING ASSY *For 96041041900*	1	-
41	817720408	SCREW -	1	-

Ref.	Article N.	Description	Qty	Kit
42	532131563	COVER -	1	-
43	582042801	SOLENOID -	1	-
45	590645901	GAUGE *For 96041041900*	1	-
45	587553903	GAUGE *For 96043024500*	1	-
46	594721501	GAUGE *For 96041041900*	1	-
46	587554003	GAUGE *For 96043024500*	1	-
50	582107601	SWITCH -	1	-
55	817060512	SCREW -	1	-
71	532194276	CABLE ASSY *For 96043024500*	1	-
71	590193302	WIRING ASSY *For 96041041900*	1	-
75	580366401	SWITCH *For 96041041900*	1	-
90	532435395	TERMINAL COVER -	1	-
99	817670412	SCREW -	1	-
100	819091416	WASHER -	1	-
102	532404454	CABLE -	1	-
105	532407568	SWITCH *For 96043024500*	1	-
144	590568001	CONTROL UNIT -	1	-
146	590193401	WIRING ASSY -	1	-
1	532163465	BATTERY -	1	-
2	874760412	BOLT -	1	-
8	532414126	TRAY *For 96043030500*	1	-
8	587205101	TRAY	1	-

Ref.	Article N.	Description	Qty	Kit
		For 96043029000, 96043032100		
16	532176138	MICRO SWITCH -	1	-
21	585436401	HARNESS -	1	-
24	585555601	CABLE -	1	-
25	585555501	CABLE -	1	-
26	532175158	FUSE -	1	-
27	586668901	NUT *For 96043029000*	1	-
27	596133601	LOCK NUT *For 96043030500, 96043032100, 96043029000*	1	-
28	532416588	CABLE -	1	-
29	532192749	SWITCH -	1	-
30	532193350	IGNITION MODULE -	1	-
33	532411935	KEY -	1	-
34	532110712	SWITCH -	1	-
40	501133601	HARNESS -	1	-
41	817720408	SCREW -	1	-
42	532131563	COVER -	1	-
43	582042801	SOLENOID *For 96043029000*	1	-
43	582042802	SOLENOID *For 96043030500, 96043032100, 96043029000*	1	-
45	587553903	GAUGE *For 96043029000*	1	-
45	587553906	GAUGE *For 96043030500, 96043032100, 96043029000*	1	-
46	587554003	GAUGE *For 96043029000*	1	-
46	587554006	GAUGE *For 96043030500, 96043032100, 96043029000*	1	-

Ref.	Article N.	Description	Qty	Kit
50	582107601	SWITCH -	1	-
50	582107602	SWITCH *for all models*	1	-
55	817060512	SCREW -	1	-
59	532400303	ELECTRICAL SYSTEM *For 96043029000*	1	-
59	596941001	RECEPTACLE *For 96043030500, 96043032100, 96043029000*	1	-
71	580513001	HARNESS -	1	-
75	580366401	SWITCH -	1	-
90	532435395	TERMINAL COVER -	1	-
99	817670412	SCREW -	1	-
100	596135301	WASHER *For 96043030500, 96043032100, 96043029000*	1	-
100	819091416	WASHER *For 96043029000*	1	-
102	532404454	CABLE -	1	-
103	532421747	HARNESS -	1	-
105	532407568	SWITCH -	1	-
1	900000002	DUMMY PART *Engine Kohler Model No. KT745-3093 (596957201) For 96043029000*	1	-
2	589818701	MUFFLER	1	-
9	501832602	KEEPER	1	-
9	596501502	KEEPER	1	-
11	587241401	CLUTCH	1	-
12	586899601	PULLEY	1	-
15	532438030	FUEL TANK ASSY *Fits 2.75 filler neck*	1	-
15	532438024	FUEL TANK ASSY *Fits 2.75 filler neck*	1	-
18	529989702	CAP *Fits 2.00 filler neck*	1	-
18	529989703	CAP	1	-

Ref.	Article N.	Description	Qty	Kit
		Fits 2.00 filler neck		
18	585124801	FUEL CAP ASSY *Fits 2.75 filler neck*	1	-
20	532424341	THROTTLE CONTROL	1	-
21	532416358	SCREW	1	-
21	596321701	SCREW	1	-
28	532401135	LINE	1	-
29	532137180	SPARK ARRESTER	1	-
37	532123487	HOSE CLAMP	1	-
41	532126197	WASHER	1	-
42	596238901	WASHER	1	-
42	539990247	WASHER	1	-
45	586668901	NUT	1	-
45	596133601	LOCK NUT	1	-
62	532434017	SHIELD	1	-
69	532178151	GASKET	1	-
70	583955601	TUBE *LH*	1	-
71	583955701	TUBE *RH*	1	-
81	532148456	TUBE	1	-
82	532428287	PLUG	1	-
85	501606901	BOLT	1	-
86	532184362	NUT	1	-
90	817000616	SCREW	1	-
91	532187495	BUSHING	1	-
92	817120616	SCREW	1	-
102	817000512	SCREW	1	-
116	539132624	KNOB	1	-
117	532420828	VALVE FUEL RESERVE	1	-
1	588549002	DECK SHELL ASSY *For 96043024500, 96041041900*	1	-
1	592618801	SERVICE KIT *For 96043029000, 96043030500, 96043032100*	1	-
1	592618901	SERVICE KIT *For 96041041900, 96043029000, 96043030500, 96043032100*	1	-
6	590304303	COVER -	1	-
7	590304203	COVER *For 96043024500, 96041041900, 96043030500, 96043032100, 96043029000*	1	-

Ref.	Article N.	Description	Qty	Kit
8	532193003	SCREW -	1	-
11	582760508	BLADE *For 96043029000, 96043032100*	1	-
11	582760502	BLADE *For 96043024500, 96041041900, 96043030500, 96043029000, 96043032100*	1	-
14	539131898	SPINDLE *Aluminium*	1	-
20	532197236	SPACER -	1	-
22	596564003	BOLT -	1	-
22	599972501	BOLT *For 96043030500*	1	-
23	588438301	SCREW -	1	-
24	532105304	HUB CAP -	1	-
25	587354701	SPRING -	1	-
26	532110452	NUT -	1	-
27	590632201	DEFLECTOR ASSY -	1	-
28	596240801	BOLT *For 96043030500, 96043032100, 96043029000*	1	-
28	539115574	EYE BOLT *For 96043024500, 96041041900, 96043029000*	1	-
29	532131491	SHAFT *For 96043024500, 96041041900, 96043029000*	1	-
29	595297001	ROD *For 96043030500, 96043032100, 96043029000*	1	-
31	532187690	WASHER -	1	-
32	532173435	PULLEY *For 96043024500, 96041041900, 96043029000*	1	-
32	532173436	PULLEY *For 96043030500, 96043032100*	1	-
33	596134801	HEXAGON NUT *For 96043030500, 96043032100, 96043029000*	1	-
33	532400234	NUT *For 96043024500, 96041041900, 96043029000*	1	-
34	596322601	NUT	1	-

Ref.	Article N.	Description	Qty	Kit
		For 96043030500, 96043032100, 96043024500, 96043029000		
34	873680600	NUT *For 96041041900, 96043029000*	1	-
36	596039201	LOCK NUT *For 96043030500, 96043032100, 96043029000*	1	-
36	539990585	NUT *For 96043024500, 96041041900, 96043029000*	1	-
37	532170165	BOLT -	1	-
41	584953901	BOLT -	1	-
42	596952201	PLUG *For 96043024500, 96041041900, 96043030500, 96043029000, 96043032100*	1	-
43	582219602	ARM -	1	-
46	532137729	SCREW -	1	-
47	582236301	DRIVE BELT -	1	-
48	574196502	TUBE -	1	-
49	873900600	NUT -	1	-
51	574169601	ROLLER -	1	-
52	532197379	PULLEY -	1	-
53	872140864	BOLT *For 96043024500, 96041041900, 96043029000*	1	-
53	594944501	BOLT *For 96043030500, 96043032100, 96043029000*	1	-
54	521991101	NUT *For 96043024500, 96041041900, 96043029000, 96043032100*	1	-
54	521991102	NUT *For 96043030500, 96043029000, 96043032100*	1	-
61	596274401	ROD *For 96043030500, 96043032100, 96043029000*	1	-
61	532400337	TIGE ANTI-ROULIS *For 96043024500, 96041041900, 96043029000*	1	-
62	596133201	WASHER *For 96043030500, 96043032100, 96043029000*	1	-
62	596134901	WASHER *For 96043024500, 96041041900, 96043029000*	1	-

Ref.	Article N.	Description	Qty	Kit
63	532194208	PIN -	1	-
66	590732501	BUMPER ASSY -	1	-
97	532178515	WASHER -	1	-
98	587358401	SPRING -	1	-
109	532416405	COUPLING -	1	-
116	596434404	BOLT -	1	-
117	589527301	WHEEL -	1	-
184	596135701	LOCK NUT *For 96043029000*	1	-
187	593824001	STUD *For 96043029000, 96043030500, 96043032100*	1	-
187	532195161	STUD -	1	-
189	532195185	ARM *For 96043024500*	1	-
189	587140502	ARM *For 96041041900, 96043029000, 96043030500, 96043032100*	1	-
190	532196539	BOLT -	1	-
192	532198468	BELT GUIDE -	1	-
196	872140620	BOLT *For 96043024500, 96041041900*	1	-
196	596337801	BOLT *For 96043030500, 96043029000, 96043032100*	1	-
196	539128101	BOLT *For 96043029000, 96043032100*	1	-
242	532415598	HOSE COUPLING -	1	-
2	532422027	SHAFT -	1	-
3	596270601	LEVER *For 96043030500, 96043032100, 96043029000*	1	-
3	532195230	LEVER *For 96043024500, 96041041900, 96043029000*	1	-
7	580962301	GRIP	1	-

Ref.	Article N.	Description	Qty	Kit
		-		
10	532196314	SPRING -	1	-
41	532175994	NUT *For 96043024500, 96041041900, 96043029000*	1	-
41	589464902	NUT *For 96043030500, 96043032100, 96043029000*	1	-
87	532194209	SPRING -	1	-
88	532195301	SPRING *For 96043029000, 96043030500, 96043032100*	1	-
88	532195304	SPRING -	1	-
89	819191912	WASHER -	1	-
91	532403407	LINK *For 96043024500, 96041041900, 96043029000*	1	-
91	589464805	LINK ASSY *For 96043030500, 96043032100, 96043029000*	1	-
96	532195263	BUSHING *For 96043024500, 96041041900, 96043029000*	1	-
96	593842101	BUSHING *For 96043030500, 96043032100, 96043029000*	1	-
97	817000612	SCREW -	1	-
98	589318703	DECK ATTACHMENT -	1	-
114	873360700	NUT -	1	-
1	900000002	DUMMY PART	1	-
1	588556701	SEAT *For 96043024500*	1	-
1	590337301	SEAT *For 96043030500, 96043032100*	1	-
1	590337302	SEAT *For 96041041900, 96043029000*	1	-
2	590336602	BRACKET -	1	-
3	590777602	BRACKET -	1	-
6	521996501	NUT *For 96043024500, 96041041900, 96043029000*	1	-
6	521996502	NUT	1	-

Ref.	Article N.	Description	Qty	Kit
		For 96043030500, 96043032100, 96043029000		
7	590812301	SPRING -	1	-
8	532171877	BOLT -	1	-
10	590481702	BRACKET -	1	-
19	590691501	KNOB -	1	-
21	596231101	BOLT -	1	-
37	594944401	NUT *For 96043029000, 96043030500, 96043032100*	1	-
37	539112899	NUT, 5/16-18, NYLOC -	1	-
42	532199371	WASHER -	1	-
47	590351101	WASHER -	1	-
1	532439740	STEERING WHEEL *For 96043024500, 96041041900, 96043029000*	1	-
1	597866101	SERVICE KIT *For 96043030500, 96043032100. Steering wheel and steering cap.*	1	-
2	532195968	SHAFT *FRONT*	1	-
4	532403089	SPINDLE SHAFT *LH*	1	-
5	532403090	SPINDLE SHAFT *RH*	1	-
6	532006266	WASHER -	1	-
7	532121748	WASHER -	1	-
8	812000029	RETAINER RING -	1	-
9	532121232	HUB CAP -	1	-
13	532121749	WASHER -	1	-
14	596238701	WASHER *For 96043030500, 96043032100, 96043029000*	1	-
14	539990118	WASHER *For 96043024500, 96041041900, 96043029000*	1	-

Ref.	Article N.	Description	Qty	Kit
15	873540600	NUT -	1	-
16	587016002	SHAFT -	1	-
19	532194729	PLATE -	1	-
21	586840201	ADAPTER -	1	-
22	585029901	BEARING -	1	-
26	532439743	HUB CAP *For 96043024500, 96041041900, 96043029000*	1	-
26	594949101	CAP *For 96043030500, 96043032100*	1	-
27	596933401	WASHER *For 96043030500, 96043032100, 96043029000*	1	-
27	819211616	WASHER *For 96043024500, 96041041900, 96043029000*	1	-
28	817000612	SCREW *For 96041041900, 96043029000, 96043030500, 96043032100*	1	-
29	817000612	SCREW *For 96041041900, 96043029000, 96043030500, 96043032100*	1	-
35	532194732	PLATE -	1	-
45	587016401	WASHER -	1	-
50	873900600	NUT -	1	-
53	532188967	WASHER -	1	-
54	874760636	BOLT -	1	-
55	532414736	SPACER -	1	-
58	532194747	BOLT -	1	-
59	532194748	WASHER -	1	-
60	873971000	NUT -	1	-
61	588794402	LINK ASSY *For 96043024500, 96041041900, 96043029000. LH.*	1	-
61	597070202	LINKAGE	1	-

Ref.	Article N.	Description	Qty	Kit
		For 96043030500, 96043032100, 96043029000. LH.		
62	588794502	LINK ASSY *For 96043024500, 96041041900, 96043029000. RH.*	1	-
62	597070302	LINKAGE *For 96043030500, 96043032100, 96043029000. RH.*	1	-
63	817000512	SCREW -	1	-
64	532199849	SPRING RETAINER -	1	-
65	532194734	BRACKET *FRONT*	1	-
66	871020748	BOLT -	1	-
67	532194737	BUSHING *FRONT*	1	-
68	873900700	NUT -	1	-
69	532199162	WASHER -	1	-
70	585338801	BRACKET -	1	-
75	587738906	KIT *Includes pinion and screw*	1	-
76	580683601	SCREW -	1	-
78	532057079	WASHER -	1	-
122	532444962	CAP -	1	-
1	532059192	CAP -	1	-
2	532065139	NIPPLE -	1	-
3	532181839	RIM ASSY *Front*	1	-
4	532008134	HOSE *Front (Service Item Only)*	1	-
5	532161024	TIRE *For 96043024500. FRONT (16 X 6.5-8).*	1	-
5	593145101	TIRE *For 96041041900, 96043029000, 96043030500, 96043032100. FRONT (16 X 6.5-8).*	1	-
6	532000278	NIPPLE	1	-

Ref.	Article N.	Description	Qty	Kit
		Front Wheel Only		
7	532009040	BEARING *Front Wheel Only*	1	-
8	532175039	HUB CAP *Front Wheel Only*	1	-
9	532170453	TIRE *For 96043024500. REAR (23 X 10.5-12).*	1	-
9	593145201	TIRE *For 96041041900, 96043029000, 96043030500, 96043032100. REAR (23 X 10.5-12).*	1	-
10	532007154	HOSE *Rear (Service Item Only*	1	-
11	532144510	WHEEL *For 96043024500, 96041041900, 96043029000. Rear.*	1	-
11	593144801	TIRE *For 96043030500, 96043032100. Rear.*	1	-
12	501503101	CAP -	1	-
16	532144334	SEALING FOAM *For 96043030500*	1	-
1	900000002	DUMMY PART *ENGINE KAWA MODEL NO. FR730V-ES04 (445363)*	1	-
2	589818701	MUFFLER -	1	-
9	501832602	KEEPER -	1	-
9	596501502	KEEPER *For 96043030500, 96043032100*	1	-
11	587241401	CLUTCH -	1	-
12	532194343	PULLEY -	1	-
15	532422909	FUEL TANK *Fits 2.75 filler neck. For 96043030500*	1	-
15	598732401	FUEL TANK *Fits 2.75 filler neck. For 96043032100*	1	-
15	590599402	TANK *Fits 2.75 filler neck. For 96043024500, 96041041900*	1	-
18	597478501	FUEL CAP ASSY *Fits 2.75 filler neck. For 96043030500*	1	-
18	529989702	CAP *Fits 2.00 filler neck*	1	-
18	529989703	CAP	1	-

Ref.	Article N.	Description	Qty	Kit
		Fits 2.00 filler neck		
18	585124801	FUEL CAP ASSY *Fits 2.75 filler neck. For 96043024500, 96041041900, 96043032100*	1	-
18	599502201	FUEL CAP ASSY *Fits 2.75 filler neck. For 96043030500*	1	-
20	532424341	THROTTLE CONTROL -	1	-
21	532416358	SCREW *For 96043024500, 96041041900*	1	-
21	596321701	SCREW *For 96043030500, 96043032100*	1	-
22	532189541	CHOKE CONTROL -	1	-
28	532401135	LINE *For 96043030500*	1	-
29	532137180	SPARK ARRESTER -	1	-
30	532401135	LINE *For 96043030500*	1	-
37	532123487	HOSE CLAMP *For 96043030500*	1	-
38	532123487	HOSE CLAMP *For 96043030500*	1	-
41	532126197	WASHER -	1	-
42	596238901	WASHER *For 96043030500, 96043032100*	1	-
42	539990247	WASHER *For 96043024500, 96041041900*	1	-
45	586668901	NUT *For 96043024500, 96041041900*	1	-
45	596133601	LOCK NUT *For 96043030500, 96043032100*	1	-
62	532434017	SHIELD -	1	-
69	532178151	GASKET -	1	-
70	583955601	TUBE *LH*	1	-
71	583955701	TUBE *RH*	1	-
81	532148456	TUBE -	1	-

Ref.	Article N.	Description	Qty	Kit
85	501606901	BOLT -	1	-
86	532184362	NUT -	1	-
90	817000616	SCREW -	1	-
91	532187495	BUSHING -	1	-
92	817120616	SCREW -	1	-
102	817000512	SCREW -	1	-
109	532414114	FILTER *For 96043030500*	1	-
110	532414118	VALVE ASSY *For 96043030500*	1	-
112	532401135	LINE *For 96043030500*	1	-
113	532414127	VALVE *For 96043030500*	1	-
116	539132624	KNOB -	1	-
117	532420828	VALVE FUEL RESERVE *For 96043030500, 96043032100*	1	-
138	532420718	PURGE *For 96043030500*	1	-
138	596941501	TUBE *For 96043030500*	1	-
143	590044401	SENSOR *For 96043024500, 96041041900*	1	-

MOWER DECK \/ CUTTING DECK

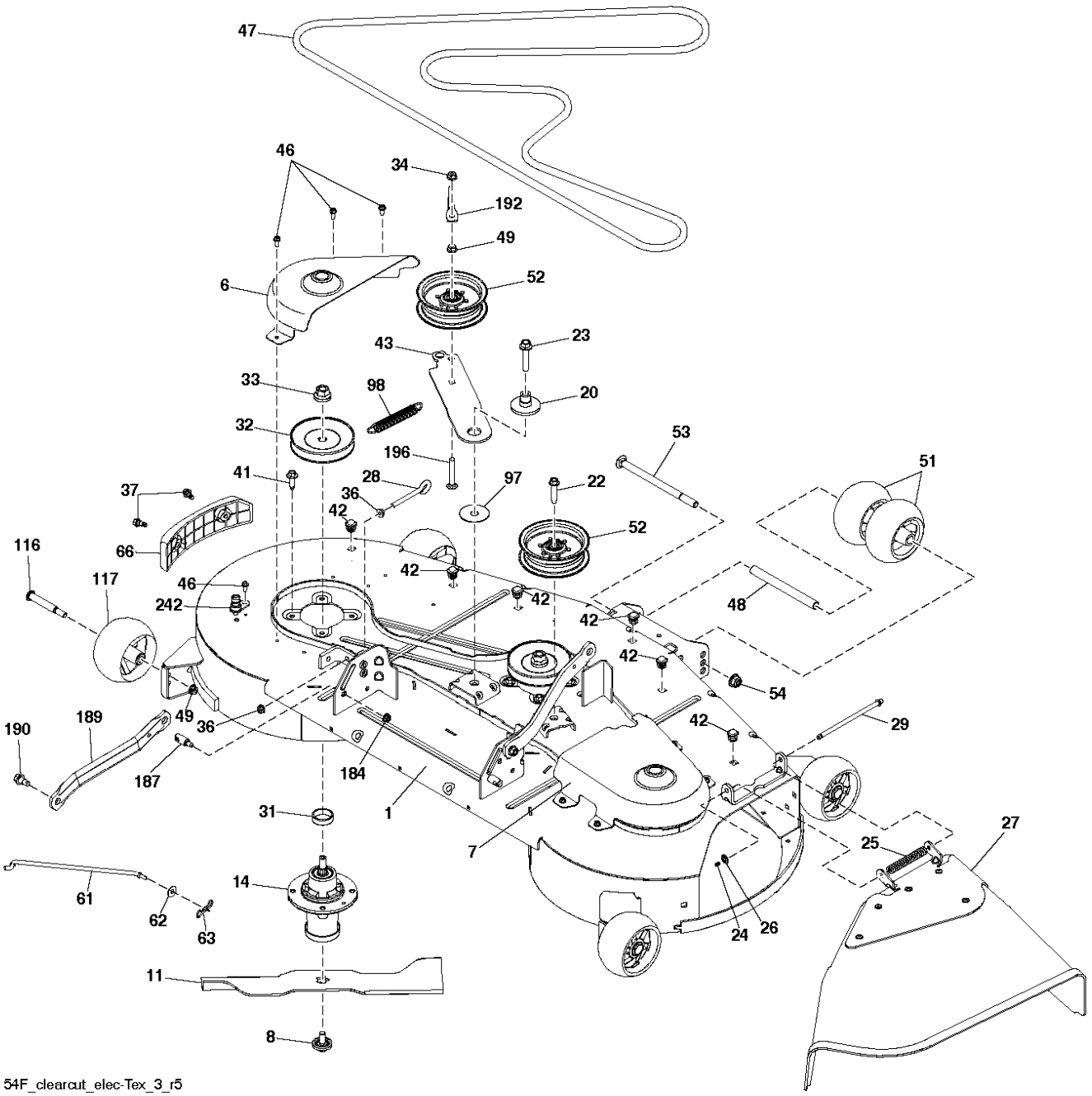

Ref.	Article N.	Description	Qty	Kit
2	580434401	DRAWBAR -	1	-
3	532444481	LOGOTYPE -	1	-
5	590748817	DASHBOARD *For 96043029000*	1	-
5	590748819	DASHBOARD *For 96041041900, 96043030500, 96043032100*	1	-
5	590748822	DASHBOARD *For 96043024500*	1	-

Ref.	Article N.	Description	Qty	Kit
14	532441177	HOOD -	1	-
15	585420301	LENS *LH*	1	-
18	597247301	GRILLE *For 96043032100 and 96043030500*	1	-
18	587523401	GRILLE -	1	-
19	596133201	WASHER *For 96043030500, 96043032100, 96043029000*	1	-
19	596134901	WASHER *For 96043024500, 96041041900, 96043029000*	1	-
25	585420201	LENS *RH*	1	-
36	817060512	SCREW -	1	-
37	532441208	FENDER *For 96043024500, 96043030500, 96043032100*	1	-
37	590534702	FENDER *For 96041041900, 96043029000*	1	-
58	532194314	BRACKET -	1	-
68	596030701	SCREW *For 96043030500, 96043032100, 96043029000*	1	-
68	539990858	SCREW *For 96043024500, 96041041900, 96043029000*	1	-
105	532431882	GUARD -	1	-
125	581684801	CLIP -	1	-
130	532416358	SCREW *For 96043024500, 96041041900, 96043029000*	1	-
130	596321701	SCREW *For 96043030500, 96043032100, 96043029000*	1	-
137	532407590	BUMPER -	1	-
146	581857901	BOLT -	1	-
150	532439774	AIR DUCT -	1	-
151	532436670	BRACKET -	1	-
152	532439870	SHIELD	1	-

Ref.	Article N.	Description	Qty	Kit
		-		
159	817000612	SCREW -	1	-
161	532439929	CONSOLE *For 96043032100*	1	-
161	532401801	CONSOLE *For 96043024500, 96043029000, 96043030500*	1	-
162	596134101	SCREW *For 96043030500, 96043032100, 96043029000*	1	-
162	532142432	SCREW *For 96043024500, 96041041900, 96043029000*	1	-
165	532194330	SUPPORT -	1	-
175	590607702	CROSS MEMBER -	1	-
176	532400776	SCREW -	1	-
177	532195228	BUSHING -	1	-
179	532168937	WASHER -	1	-
180	593346301	CHASSIS -	1	-
182	532406859	DASH -	1	-
183	595305701	SCREW *For 96043030500, 96043032100, 96043029000*	1	-
183	874520520	BOLT *For 96043024500, 96041041900, 96043029000*	1	-
189	817000512	SCREW -	1	-
191	586182801	REFLECTOR -	1	-
194	596135701	LOCK NUT *For 96043030500, 96043032100, 96043029000*	1	-
194	873900500	NUT *For 96043024500, 96041041900, 96043029000*	1	-
195	532404137	PLUG *For 96043024500, 96041041900*	1	-
196	532439674	CONSOLE *For 96043024500, 96041041900, 96043029000, 96043030500*	1	-
196	532439716	CONSOLE *For 96043032100*	1	-

Ref.	Article N.	Description	Qty	Kit
199	532198259	PLATE -	1	-
202	532439728	COVER *RH*	1	-
203	532439727	COVER *LH*	1	-
204	587485801	VENT -	1	-
205	532439730	TRIM *RH*	1	-
206	532439729	TRIM *LH*	1	-
207	585420002	BEZEL *RH*	1	-
208	585420102	BEZEL *LH*	1	-
214	532199145	CLIP -	1	-
217	532409167	ROD -	1	-
221	532198909	LENS *LH*	1	-
228	593824001	STUD *For 96043029000, 96043032100*	1	-
228	532195161	STUD -	1	-
235	532406129	SPACER *For 96043024500, 96041041900, 96043029000*	1	-
235	596564201	SPACER *For 96043030500, 96043032100, 96043029000*	1	-
236	873930500	NUT -	1	-
281	817000616	SCREW -	1	-
296	585420501	LIGHT -	1	-
297	586182901	REFLECTOR -	1	-
299	585420401	LIGHT -	1	-
306	873900600	NUT -	1	-
335	532448204	COVER	1	-

Ref.	Article N.	Description	Qty	Kit
		-		
336	532445309	COVER -	1	-
350	532445143	CLIP -	1	-
351	532421734	PEN -	1	-
352	532448634	CLEVIS PIN -	1	-
353	532178062	CLIP -	1	-
354	532448619	SUPPORT -	1	-
354	593196901	SUPPORT *For 96043029000, 96043030500, 96043029000, 96043032100*	1	-
355	532448636	BELLCRANK -	1	-
356	532448693	LINK -	1	-
357	532448684	COMPRESSION SPRING -	1	-
358	580366601	STUD *For 96043024500, 96041041900, 96043029000*	1	-
358	599128101	STUD *For 96043030500, 96043029000, 96043032100*	1	-
359	584393401	ACTUATOR -	1	-
360	532448618	BRACKET -	1	-
361	596564002	BOLT *For 96043030500, 96043032100, 96043029000*	1	-
361	817490610	SCREW *For 96043024500, 96041041900, 96043029000*	1	-
362	532448633	CLEVIS PIN -	1	-
365	532447368	SPACER -	1	-
375	586908201	BUMPER -	1	-
378	590849801	BUSHING -	1	-
379	593206902	PLATE -	1	-

Ref.	Article N.	Description	Qty	Kit
1	581578901	DECAL *For 96043024500, 96043029000, 96043030500*	1	-
1	581579001	DECAL *For 96043024500, 96043029000*	1	-
1	586047302	DECAL *For 96041041900*	1	-
2	589357901	DECAL -	1	-
2	589357902	DECAL *For 96043032100*	1	-
3	592898301	DECAL *For 96043024500*	1	-
4	591164701	DECAL *For 96041041900, 96043029000, 96043030500, 96043032100*	1	-
5	587015101	DECAL *For 96043024500, 96043029000*	1	-
5	597470101	DECAL *For 96043030500, 96043032100*	1	-
6	596024201	DECAL *For 96043030500*	1	-
7	590885101	DECAL *For 96043024500*	1	-
7	593808801	DECAL *For 96041041900, 96043029000, 96043030500, 96043032100*	1	-
8	586978801	DECAL -	1	-
9	591164701	DECAL *For 96041041900, 96043029000, 96043030500, 96043032100*	1	-
10	501082601	DECAL *For 96041041900*	1	-
11	592898301	DECAL *For 96043024500*	1	-
14	591448701	DECAL -	1	-
15	532423829	DECAL *For 96043024500, 96041041900, 96043029000, 96043030500*	1	-
16	581627301	DECAL -	1	-
17	590937401	DECAL *For 96043024500, 96043030500, 96043032100*	1	-
17	594110601	DECAL *For 96041041900. (582 45 79-01) DECAL.*	1	-
17	596970801	DECAL	1	-

Ref.	Article N.	Description	Qty	Kit
		For 96043029000		
30	581579001	DECAL *For 96043024500, 96043029000*	1	-
31	586742201	DECAL *For 96043024500, 96043029000*	1	-
32	581724801	DECAL -	1	-
33	581724802	DECAL *For 96043032100*	1	-
34	532439882	PAD -	1	-
35	532439881	PAD -	1	-
1	900000002	DUMMY PART *TRANSAXLE TUFFTORQ K66ELD (580402201)*	1	-
2	539912757	KEY -	1	-
3	532007563	WASHER -	1	-
7	586935402	HUB -	1	-
9	532140080	BOLT *For 96043024500, 96041041900, 96043029000*	1	-
9	596218701	BOLT *For 96043030500, 96043032100, 96043029000*	1	-
15	596565301	WASHER *For 96043029000, 96043032100*	1	-
15	819131316	WASHER -	1	-
17	532401072	SPRING -	1	-
26	532199679	SPRING -	1	-
29	532407245	ROD -	1	-
33	812000053	E-CLIP -	1	-
35	590605902	ROD *For 96043024500, 96043029000, 96043030500, 96043032100*	1	-
35	583864501	ROD *For 96041041900*	1	-
42	532008883	PEDAL -	1	-

Ref.	Article N.	Description	Qty	Kit
49	596136201	BOLT *For 96043030500, 96043032100, 96043029000*	1	-
49	872110614	BOLT *For 96043024500, 96041041900, 96043029000*	1	-
50	532194327	PULLEY -	1	-
51	873900600	NUT -	1	-
52	532194326	PULLEY -	1	-
56	592855301	DRIVE BELT -	1	-
64	532197865	SHAFT -	1	-
69	583404901	PIN *For 96043024500*	1	-
69	532423303	HAIR PIN COTTER *For 96041041900, 96043029000, 96043030500, 96043032100*	1	-
70	532439661	CONSOLE -	1	-
73	595316601	BOLT *For 96043030500, 96043032100, 96043029000*	1	-
73	874490544	SCREW *For 96043024500, 96041041900, 96043029000*	1	-
74	596134101	SCREW *For 96043030500, 96043032100, 96043029000*	1	-
74	532142432	SCREW *For 96043024500, 96041041900, 96043029000*	1	-
80	589333402	STRAP -	1	-
92	595305701	SCREW -	1	-
99	582404701	ROD -	1	-
116	596135701	LOCK NUT -	1	-
125	817000512	SCREW -	1	-
153	532004497	CLIP -	1	-
159	596029501	PIN *For 96043030500, 96043032100, 96043029000*	1	-
159	876020412	SPLIT PIN	1	-

Ref.	Article N.	Description	Qty	Kit
		For 96043024500, 96041041900, 96043029000		
161	532105709	SPRING -	1	-
163	532407246	ROD -	1	-
166	532429164	NUT -	1	-
167	532405257	LATCH -	1	-
170	532194322	KEEPER -	1	-
171	596136301	BOLT -	1	-
177	587225301	PIN *For 96043030500, 96043032100, 96043029000*	1	-
177	532169484	PIN *For 96043024500, 96041041900, 96043029000*	1	-
177	596029401	RETAINER *For 96043030500, 96043032100, 96043029000*	1	-
183	598873002	SPACER *For 96043032100*	1	-
183	587587401	SPACER -	1	-
184	587653701	HANDLE -	1	-
185	872110622	BOLT -	1	-
186	532194321	SPACER -	1	-
187	596135501	WASHER -	1	-
188	582217001	LINK -	1	-
189	532194317	PLATE -	1	-
190	532194318	BELT GUIDE -	1	-
196	817000616	SCREW -	1	-
197	585658601	CLUTCH *For 96043024500, 96041041900*	1	-
197	587402001	BRACKET *For 96043029000*	1	-

Ref.	Article N.	Description	Qty	Kit
197	585658602	BOSS *For 96043030500, 96043032100, 96043029000*	1	-
205	532123800	WASHER -	1	-
206	532448596	BRACKET -	1	-
207	587031402	LATCH *For 96043030500, 96043032100, 96043029000*	1	-
207	587031401	LATCH *For 96043024500, 96041041900, 96043029000*	1	-
208	532197869	SUPPORT *For 96043024500, 96041041900, 96043029000*	1	-
208	596564101	GEAR *For 96043030500, 96043032100, 96043029000*	1	-
209	590527802	ROD *For 96043024500, 96043029000, 96043030500, 96043032100*	1	-
209	532199592	ROD *For 96041041900*	1	-
210	532197860	ARM *RH*	1	-
211	532120183	BEARING -	1	-
213	532403119	CONTROL -	1	-
214	532421263	PAD -	1	-
215	586606502	PEDAL -	1	-
220	532198908	LENS *RH*	1	-
221	532403187	SPRING -	1	-
222	879212010	WASHER -	1	-
225	532407311	KEEPER -	1	-
226	532407109	BRACKET -	1	-
282	874490548	BOLT -	1	-
366	580626201	BRACKET *For 96043024500, 96041041900*	1	-
366	580626202	BRACKET	1	-

Ref.	Article N.	Description	Qty	Kit
		For 96043029000, 96043030500, 96043032100		
366	592878002	BRACKET *For 96043029000, 96043032100*	1	-
1	532163465	BATTERY -	1	-
2	874760412	BOLT -	1	-
8	587205101	TRAY -	1	-
16	532176138	MICRO SWITCH -	1	-
21	532400252	HARNESS *For 96043024500*	1	-
21	585436401	HARNESS *For 96041041900*	1	-
24	585555601	CABLE *For 96043024500*	1	-
24	590223801	PRIMARY CABLE *For 96041041900*	1	-
25	585555501	CABLE -	1	-
26	532175158	FUSE -	1	-
27	586668901	NUT -	1	-
28	532416588	CABLE *For 96043024500*	1	-
28	590223702	GROUND CABLE *For 96041041900*	1	-
29	532401545	SWITCH *For 96043024500*	1	-
29	587648401	SWITCH *For 96041041900*	1	-
30	532193350	IGNITION MODULE -	1	-
33	532411935	KEY *For 96041041900*	1	-
33	532411933	KEY *For 96043024500*	1	-
34	532110712	SWITCH -	1	-
40	501133101	HARNESS *For 96043024500*	1	-

Ref.	Article N.	Description	Qty	Kit
40	590193201	WIRING ASSY *For 96041041900*	1	-
41	817720408	SCREW -	1	-
42	532131563	COVER -	1	-
43	582042801	SOLENOID -	1	-
45	590645901	GAUGE *For 96041041900*	1	-
45	587553903	GAUGE *For 96043024500*	1	-
46	594721501	GAUGE *For 96041041900*	1	-
46	587554003	GAUGE *For 96043024500*	1	-
50	582107601	SWITCH -	1	-
55	817060512	SCREW -	1	-
71	532194276	CABLE ASSY *For 96043024500*	1	-
71	590193302	WIRING ASSY *For 96041041900*	1	-
75	580366401	SWITCH *For 96041041900*	1	-
90	532435395	TERMINAL COVER -	1	-
99	817670412	SCREW -	1	-
100	819091416	WASHER -	1	-
102	532404454	CABLE -	1	-
105	532407568	SWITCH *For 96043024500*	1	-
144	590568001	CONTROL UNIT -	1	-
146	590193401	WIRING ASSY -	1	-
1	532163465	BATTERY -	1	-
2	874760412	BOLT	1	-

Ref.	Article N.	Description	Qty	Kit
		-		
8	532414126	TRAY *For 96043030500*	1	-
8	587205101	TRAY *For 96043029000, 96043032100*	1	-
16	532176138	MICRO SWITCH -	1	-
21	585436401	HARNESS -	1	-
24	585555601	CABLE -	1	-
25	585555501	CABLE -	1	-
26	532175158	FUSE -	1	-
27	586668901	NUT *For 96043029000*	1	-
27	596133601	LOCK NUT *For 96043030500, 96043032100, 96043029000*	1	-
28	532416588	CABLE -	1	-
29	532192749	SWITCH -	1	-
30	532193350	IGNITION MODULE -	1	-
33	532411935	KEY -	1	-
34	532110712	SWITCH -	1	-
40	501133601	HARNESS -	1	-
41	817720408	SCREW -	1	-
42	532131563	COVER -	1	-
43	582042801	SOLENOID *For 96043029000*	1	-
43	582042802	SOLENOID *For 96043030500, 96043032100, 96043029000*	1	-
45	587553903	GAUGE *For 96043029000*	1	-
45	587553906	GAUGE *For 96043030500, 96043032100, 96043029000*	1	-

Ref.	Article N.	Description	Qty	Kit
46	587554003	GAUGE *For 96043029000*	1	-
46	587554006	GAUGE *For 96043030500, 96043032100, 96043029000*	1	-
50	582107601	SWITCH -	1	-
50	582107602	SWITCH *for all models*	1	-
55	817060512	SCREW -	1	-
59	532400303	ELECTRICAL SYSTEM *For 96043029000*	1	-
59	596941001	RECEPTACLE *For 96043030500, 96043032100, 96043029000*	1	-
71	580513001	HARNESS -	1	-
75	580366401	SWITCH -	1	-
90	532435395	TERMINAL COVER -	1	-
99	817670412	SCREW -	1	-
100	596135301	WASHER *For 96043030500, 96043032100, 96043029000*	1	-
100	819091416	WASHER *For 96043029000*	1	-
102	532404454	CABLE -	1	-
103	532421747	HARNESS -	1	-
105	532407568	SWITCH -	1	-
1	900000002	DUMMY PART *Engine Kohler Model No. KT745-3093 (596957201) For 96043029000*	1	-
2	589818701	MUFFLER	1	-
9	501832602	KEEPER	1	-
9	596501502	KEEPER	1	-
11	587241401	CLUTCH	1	-
12	586899601	PULLEY	1	-
15	532438030	FUEL TANK ASSY *Fits 2.75 filler neck*	1	-
15	532438024	FUEL TANK ASSY	1	-

Ref.	Article N.	Description	Qty	Kit
		Fits 2.75 filler neck		
18	529989702	CAP *Fits 2.00 filler neck*	1	-
18	529989703	CAP *Fits 2.00 filler neck*	1	-
18	585124801	FUEL CAP ASSY *Fits 2.75 filler neck*	1	-
20	532424341	THROTTLE CONTROL	1	-
21	532416358	SCREW	1	-
21	596321701	SCREW	1	-
28	532401135	LINE	1	-
29	532137180	SPARK ARRESTER	1	-
37	532123487	HOSE CLAMP	1	-
41	532126197	WASHER	1	-
42	596238901	WASHER	1	-
42	539990247	WASHER	1	-
45	586668901	NUT	1	-
45	596133601	LOCK NUT	1	-
62	532434017	SHIELD	1	-
69	532178151	GASKET	1	-
70	583955601	TUBE *LH*	1	-
71	583955701	TUBE *RH*	1	-
81	532148456	TUBE	1	-
82	532428287	PLUG	1	-
85	501606901	BOLT	1	-
86	532184362	NUT	1	-
90	817000616	SCREW	1	-
91	532187495	BUSHING	1	-
92	817120616	SCREW	1	-
102	817000512	SCREW	1	-
116	539132624	KNOB	1	-
117	532420828	VALVE FUEL RESERVE	1	-
1	588549002	DECK SHELL ASSY *For 96043024500, 96041041900*	1	-
1	592618801	SERVICE KIT *For 96043029000, 96043030500, 96043032100*	1	-
1	592618901	SERVICE KIT *For 96041041900, 96043029000, 96043030500, 96043032100*	1	-

Ref.	Article N.	Description	Qty	Kit
6	590304303	COVER -	1	-
7	590304203	COVER *For 96043024500, 96041041900, 96043030500, 96043032100, 96043029000*	1	-
8	532193003	SCREW -	1	-
11	582760508	BLADE *For 96043029000, 96043032100*	1	-
11	582760502	BLADE *For 96043024500, 96041041900, 96043030500, 96043029000, 96043032100*	1	-
14	539131898	SPINDLE *Aluminium*	1	-
20	532197236	SPACER -	1	-
22	596564003	BOLT -	1	-
22	599972501	BOLT *For 96043030500*	1	-
23	588438301	SCREW -	1	-
24	532105304	HUB CAP -	1	-
25	587354701	SPRING -	1	-
26	532110452	NUT -	1	-
27	590632201	DEFLECTOR ASSY -	1	-
28	596240801	BOLT *For 96043030500, 96043032100, 96043029000*	1	-
28	539115574	EYE BOLT *For 96043024500, 96041041900, 96043029000*	1	-
29	532131491	SHAFT *For 96043024500, 96041041900, 96043029000*	1	-
29	595297001	ROD *For 96043030500, 96043032100, 96043029000*	1	-
31	532187690	WASHER -	1	-
32	532173435	PULLEY *For 96043024500, 96041041900, 96043029000*	1	-
32	532173436	PULLEY *For 96043030500, 96043032100*	1	-
33	596134801	HEXAGON NUT	1	-

Ref.	Article N.	Description	Qty	Kit
		For 96043030500, 96043032100, 96043029000		
33	532400234	NUT *For 96043024500, 96041041900, 96043029000*	1	-
34	596322601	NUT *For 96043030500, 96043032100, 96043024500, 96043029000*	1	-
34	873680600	NUT *For 96041041900, 96043029000*	1	-
36	596039201	LOCK NUT *For 96043030500, 96043032100, 96043029000*	1	-
36	539990585	NUT *For 96043024500, 96041041900, 96043029000*	1	-
37	532170165	BOLT -	1	-
41	584953901	BOLT -	1	-
42	596952201	PLUG *For 96043024500, 96041041900, 96043030500, 96043029000, 96043032100*	1	-
43	582219602	ARM -	1	-
46	532137729	SCREW -	1	-
47	582236301	DRIVE BELT -	1	-
48	574196502	TUBE -	1	-
49	873900600	NUT -	1	-
51	574169601	ROLLER -	1	-
52	532197379	PULLEY -	1	-
53	872140864	BOLT *For 96043024500, 96041041900, 96043029000*	1	-
53	594944501	BOLT *For 96043030500, 96043032100, 96043029000*	1	-
54	521991101	NUT *For 96043024500, 96041041900, 96043029000, 96043032100*	1	-
54	521991102	NUT *For 96043030500, 96043029000, 96043032100*	1	-
61	596274401	ROD *For 96043030500, 96043032100, 96043029000*	1	-
61	532400337	TIGE ANTI-ROULIS *For 96043024500, 96041041900, 96043029000*	1	-

Ref.	Article N.	Description	Qty	Kit
62	596133201	WASHER *For 96043030500, 96043032100, 96043029000*	1	-
62	596134901	WASHER *For 96043024500, 96041041900, 96043029000*	1	-
63	532194208	PIN -	1	-
66	590732501	BUMPER ASSY -	1	-
97	532178515	WASHER -	1	-
98	587358401	SPRING -	1	-
109	532416405	COUPLING -	1	-
116	596434404	BOLT -	1	-
117	589527301	WHEEL -	1	-
184	596135701	LOCK NUT *For 96043029000*	1	-
187	593824001	STUD *For 96043029000, 96043030500, 96043032100*	1	-
187	532195161	STUD -	1	-
189	532195185	ARM *For 96043024500*	1	-
189	587140502	ARM *For 96041041900, 96043029000, 96043030500, 96043032100*	1	-
190	532196539	BOLT -	1	-
192	532198468	BELT GUIDE -	1	-
196	872140620	BOLT *For 96043024500, 96041041900*	1	-
196	596337801	BOLT *For 96043030500, 96043029000, 96043032100*	1	-
196	539128101	BOLT *For 96043029000, 96043032100*	1	-
242	532415598	HOSE COUPLING -	1	-
2	532422027	SHAFT -	1	-
3	596270601	LEVER	1	-

Ref.	Article N.	Description	Qty	Kit
		For 96043030500, 96043032100, 96043029000		
3	532195230	LEVER *For 96043024500, 96041041900, 96043029000*	1	-
7	580962301	GRIP -	1	-
10	532196314	SPRING -	1	-
41	532175994	NUT *For 96043024500, 96041041900, 96043029000*	1	-
41	589464902	NUT *For 96043030500, 96043032100, 96043029000*	1	-
87	532194209	SPRING -	1	-
88	532195301	SPRING *For 96043029000, 96043030500, 96043032100*	1	-
88	532195304	SPRING -	1	-
89	819191912	WASHER -	1	-
91	532403407	LINK *For 96043024500, 96041041900, 96043029000*	1	-
91	589464805	LINK ASSY *For 96043030500, 96043032100, 96043029000*	1	-
96	532195263	BUSHING *For 96043024500, 96041041900, 96043029000*	1	-
96	593842101	BUSHING *For 96043030500, 96043032100, 96043029000*	1	-
97	817000612	SCREW -	1	-
98	589318703	DECK ATTACHMENT -	1	-
114	873360700	NUT -	1	-
1	900000002	DUMMY PART	1	-
1	588556701	SEAT *For 96043024500*	1	-
1	590337301	SEAT *For 96043030500, 96043032100*	1	-
1	590337302	SEAT *For 96041041900, 96043029000*	1	-
2	590336602	BRACKET -	1	-
3	590777602	BRACKET	1	-

Ref.	Article N.	Description	Qty	Kit
		-		
6	521996501	NUT *For 96043024500, 96041041900, 96043029000*	1	-
6	521996502	NUT *For 96043030500, 96043032100, 96043029000*	1	-
7	590812301	SPRING -	1	-
8	532171877	BOLT -	1	-
10	590481702	BRACKET -	1	-
19	590691501	KNOB -	1	-
21	596231101	BOLT -	1	-
37	594944401	NUT *For 96043029000, 96043030500, 96043032100*	1	-
37	539112899	NUT, 5/16-18, NYLOC -	1	-
42	532199371	WASHER -	1	-
47	590351101	WASHER -	1	-
1	532439740	STEERING WHEEL *For 96043024500, 96041041900, 96043029000*	1	-
1	597866101	SERVICE KIT *For 96043030500, 96043032100. Steering wheel and steering cap.*	1	-
2	532195968	SHAFT *FRONT*	1	-
4	532403089	SPINDLE SHAFT *LH*	1	-
5	532403090	SPINDLE SHAFT *RH*	1	-
6	532006266	WASHER -	1	-
7	532121748	WASHER -	1	-
8	812000029	RETAINER RING -	1	-
9	532121232	HUB CAP -	1	-
13	532121749	WASHER -	1	-

Ref.	Article N.	Description	Qty	Kit
14	596238701	WASHER *For 96043030500, 96043032100, 96043029000*	1	-
14	539990118	WASHER *For 96043024500, 96041041900, 96043029000*	1	-
15	873540600	NUT -	1	-
16	587016002	SHAFT -	1	-
19	532194729	PLATE -	1	-
21	586840201	ADAPTER -	1	-
22	585029901	BEARING -	1	-
26	532439743	HUB CAP *For 96043024500, 96041041900, 96043029000*	1	-
26	594949101	CAP *For 96043030500, 96043032100*	1	-
27	596933401	WASHER *For 96043030500, 96043032100, 96043029000*	1	-
27	819211616	WASHER *For 96043024500, 96041041900, 96043029000*	1	-
28	817000612	SCREW *For 96041041900, 96043029000, 96043030500, 96043032100*	1	-
29	817000612	SCREW *For 96041041900, 96043029000, 96043030500, 96043032100*	1	-
35	532194732	PLATE -	1	-
45	587016401	WASHER -	1	-
50	873900600	NUT -	1	-
53	532188967	WASHER -	1	-
54	874760636	BOLT -	1	-
55	532414736	SPACER -	1	-
58	532194747	BOLT -	1	-
59	532194748	WASHER -	1	-
60	873971000	NUT	1	-

Ref.	Article N.	Description	Qty	Kit
		-		
61	588794402	LINK ASSY *For 96043024500, 96041041900, 96043029000. LH.*	1	-
61	597070202	LINKAGE *For 96043030500, 96043032100, 96043029000. LH.*	1	-
62	588794502	LINK ASSY *For 96043024500, 96041041900, 96043029000. RH.*	1	-
62	597070302	LINKAGE *For 96043030500, 96043032100, 96043029000. RH.*	1	-
63	817000512	SCREW -	1	-
64	532199849	SPRING RETAINER -	1	-
65	532194734	BRACKET *FRONT*	1	-
66	871020748	BOLT -	1	-
67	532194737	BUSHING *FRONT*	1	-
68	873900700	NUT -	1	-
69	532199162	WASHER -	1	-
70	585338801	BRACKET -	1	-
75	587738906	KIT *Includes pinion and screw*	1	-
76	580683601	SCREW -	1	-
78	532057079	WASHER -	1	-
122	532444962	CAP -	1	-
1	532059192	CAP -	1	-
2	532065139	NIPPLE -	1	-
3	532181839	RIM ASSY *Front*	1	-
4	532008134	HOSE *Front (Service Item Only)*	1	-
5	532161024	TIRE *For 96043024500. FRONT (16 X 6.5-8).*	1	-

Ref.	Article N.	Description	Qty	Kit
5	593145101	TIRE *For 96041041900, 96043029000, 96043030500, 96043032100. FRONT (16 X 6.5-8).*	1	-
6	532000278	NIPPLE *Front Wheel Only*	1	-
7	532009040	BEARING *Front Wheel Only*	1	-
8	532175039	HUB CAP *Front Wheel Only*	1	-
9	532170453	TIRE *For 96043024500. REAR (23 X 10.5-12).*	1	-
9	593145201	TIRE *For 96041041900, 96043029000, 96043030500, 96043032100. REAR (23 X 10.5-12).*	1	-
10	532007154	HOSE *Rear (Service Item Only*	1	-
11	532144510	WHEEL *For 96043024500, 96041041900, 96043029000. Rear.*	1	-
11	593144801	TIRE *For 96043030500, 96043032100. Rear.*	1	-
12	501503101	CAP -	1	-
16	532144334	SEALING FOAM *For 96043030500*	1	-
1	900000002	DUMMY PART *ENGINE KAWA MODEL NO. FR730V-ES04 (445363)*	1	-
2	589818701	MUFFLER -	1	-
9	501832602	KEEPER -	1	-
9	596501502	KEEPER *For 96043030500, 96043032100*	1	-
11	587241401	CLUTCH -	1	-
12	532194343	PULLEY -	1	-
15	532422909	FUEL TANK *Fits 2.75 filler neck. For 96043030500*	1	-
15	598732401	FUEL TANK *Fits 2.75 filler neck. For 96043032100*	1	-
15	590599402	TANK *Fits 2.75 filler neck. For 96043024500, 96041041900*	1	-
18	597478501	FUEL CAP ASSY	1	-

Ref.	Article N.	Description	Qty	Kit
		Fits 2.75 filler neck. For 96043030500		
18	529989702	CAP *Fits 2.00 filler neck*	1	-
18	529989703	CAP *Fits 2.00 filler neck*	1	-
18	585124801	FUEL CAP ASSY *Fits 2.75 filler neck. For 96043024500, 96041041900, 96043032100*	1	-
18	599502201	FUEL CAP ASSY *Fits 2.75 filler neck. For 96043030500*	1	-
20	532424341	THROTTLE CONTROL -	1	-
21	532416358	SCREW *For 96043024500, 96041041900*	1	-
21	596321701	SCREW *For 96043030500, 96043032100*	1	-
22	532189541	CHOKE CONTROL -	1	-
28	532401135	LINE *For 96043030500*	1	-
29	532137180	SPARK ARRESTER -	1	-
30	532401135	LINE *For 96043030500*	1	-
37	532123487	HOSE CLAMP *For 96043030500*	1	-
38	532123487	HOSE CLAMP *For 96043030500*	1	-
41	532126197	WASHER -	1	-
42	596238901	WASHER *For 96043030500, 96043032100*	1	-
42	539990247	WASHER *For 96043024500, 96041041900*	1	-
45	586668901	NUT *For 96043024500, 96041041900*	1	-
45	596133601	LOCK NUT *For 96043030500, 96043032100*	1	-
62	532434017	SHIELD -	1	-
69	532178151	GASKET -	1	-
70	583955601	TUBE *LH*	1	-

Ref.	Article N.	Description	Qty	Kit
71	583955701	TUBE *RH*	1	-
81	532148456	TUBE -	1	-
85	501606901	BOLT -	1	-
86	532184362	NUT -	1	-
90	817000616	SCREW -	1	-
91	532187495	BUSHING -	1	-
92	817120616	SCREW -	1	-
102	817000512	SCREW -	1	-
109	532414114	FILTER *For 96043030500*	1	-
110	532414118	VALVE ASSY *For 96043030500*	1	-
112	532401135	LINE *For 96043030500*	1	-
113	532414127	VALVE *For 96043030500*	1	-
116	539132624	KNOB -	1	-
117	532420828	VALVE FUEL RESERVE *For 96043030500, 96043032100*	1	-
138	532420718	PURGE *For 96043030500*	1	-
138	596941501	TUBE *For 96043030500*	1	-
143	590044401	SENSOR *For 96043024500, 96041041900*	1	-

MOWER LIFT \/ DECK LIFT

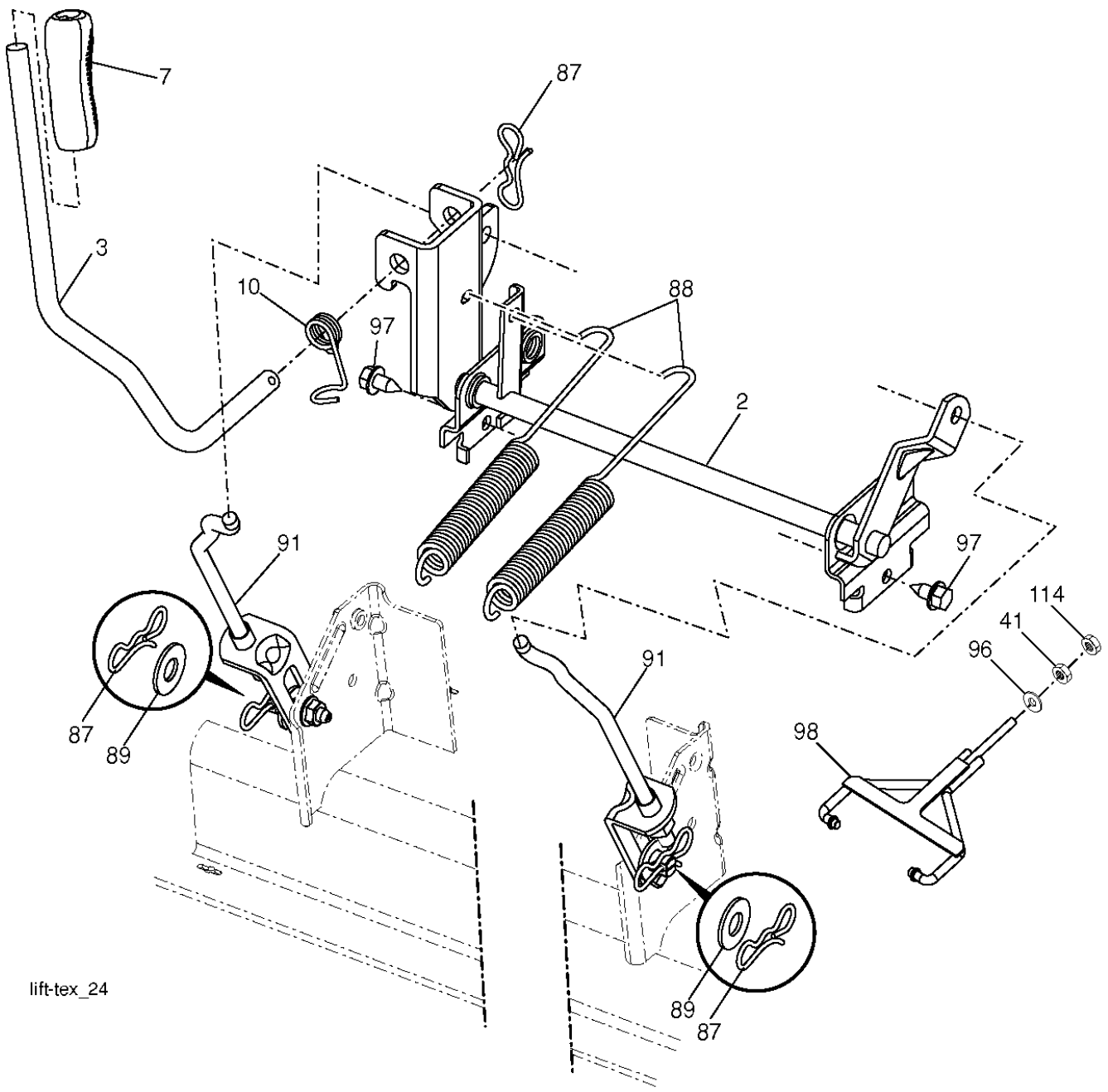

Ref.	Article N.	Description	Qty	Kit
2	580434401	DRAWBAR -	1	-
3	532444481	LOGOTYPE -	1	-
5	590748817	DASHBOARD *For 96043029000*	1	-
5	590748819	DASHBOARD *For 96041041900, 96043030500, 96043032100*	1	-
5	590748822	DASHBOARD *For 96043024500*	1	-
14	532441177	HOOD	1	-

Ref.	Article N.	Description	Qty	Kit
		-		
15	585420301	LENS *LH*	1	-
18	597247301	GRILLE *For 96043032100 and 96043030500*	1	-
18	587523401	GRILLE -	1	-
19	596133201	WASHER *For 96043030500, 96043032100, 96043029000*	1	-
19	596134901	WASHER *For 96043024500, 96041041900, 96043029000*	1	-
25	585420201	LENS *RH*	1	-
36	817060512	SCREW -	1	-
37	532441208	FENDER *For 96043024500, 96043030500, 96043032100*	1	-
37	590534702	FENDER *For 96041041900, 96043029000*	1	-
58	532194314	BRACKET -	1	-
68	596030701	SCREW *For 96043030500, 96043032100, 96043029000*	1	-
68	539990858	SCREW *For 96043024500, 96041041900, 96043029000*	1	-
105	532431882	GUARD -	1	-
125	581684801	CLIP -	1	-
130	532416358	SCREW *For 96043024500, 96041041900, 96043029000*	1	-
130	596321701	SCREW *For 96043030500, 96043032100, 96043029000*	1	-
137	532407590	BUMPER -	1	-
146	581857901	BOLT -	1	-
150	532439774	AIR DUCT -	1	-
151	532436670	BRACKET -	1	-
152	532439870	SHIELD -	1	-

Ref.	Article N.	Description	Qty	Kit
159	817000612	SCREW -	1	-
161	532439929	CONSOLE *For 96043032100*	1	-
161	532401801	CONSOLE *For 96043024500, 96043029000, 96043030500*	1	-
162	596134101	SCREW *For 96043030500, 96043032100, 96043029000*	1	-
162	532142432	SCREW *For 96043024500, 96041041900, 96043029000*	1	-
165	532194330	SUPPORT -	1	-
175	590607702	CROSS MEMBER -	1	-
176	532400776	SCREW -	1	-
177	532195228	BUSHING -	1	-
179	532168937	WASHER -	1	-
180	593346301	CHASSIS -	1	-
182	532406859	DASH -	1	-
183	595305701	SCREW *For 96043030500, 96043032100, 96043029000*	1	-
183	874520520	BOLT *For 96043024500, 96041041900, 96043029000*	1	-
189	817000512	SCREW -	1	-
191	586182801	REFLECTOR -	1	-
194	596135701	LOCK NUT *For 96043030500, 96043032100, 96043029000*	1	-
194	873900500	NUT *For 96043024500, 96041041900, 96043029000*	1	-
195	532404137	PLUG *For 96043024500, 96041041900*	1	-
196	532439674	CONSOLE *For 96043024500, 96041041900, 96043029000, 96043030500*	1	-
196	532439716	CONSOLE *For 96043032100*	1	-
199	532198259	PLATE	1	-

Ref.	Article N.	Description	Qty	Kit
		-		
202	532439728	COVER *RH*	1	-
203	532439727	COVER *LH*	1	-
204	587485801	VENT -	1	-
205	532439730	TRIM *RH*	1	-
206	532439729	TRIM *LH*	1	-
207	585420002	BEZEL *RH*	1	-
208	585420102	BEZEL *LH*	1	-
214	532199145	CLIP -	1	-
217	532409167	ROD -	1	-
221	532198909	LENS *LH*	1	-
228	593824001	STUD *For 96043029000, 96043032100*	1	-
228	532195161	STUD -	1	-
235	532406129	SPACER *For 96043024500, 96041041900, 96043029000*	1	-
235	596564201	SPACER *For 96043030500, 96043032100, 96043029000*	1	-
236	873930500	NUT -	1	-
281	817000616	SCREW -	1	-
296	585420501	LIGHT -	1	-
297	586182901	REFLECTOR -	1	-
299	585420401	LIGHT -	1	-
306	873900600	NUT -	1	-
335	532448204	COVER -	1	-

Ref.	Article N.	Description	Qty	Kit
336	532445309	COVER -	1	-
350	532445143	CLIP -	1	-
351	532421734	PEN -	1	-
352	532448634	CLEVIS PIN -	1	-
353	532178062	CLIP -	1	-
354	532448619	SUPPORT -	1	-
354	593196901	SUPPORT *For 96043029000, 96043030500, 96043029000, 96043032100*	1	-
355	532448636	BELLCRANK -	1	-
356	532448693	LINK -	1	-
357	532448684	COMPRESSION SPRING -	1	-
358	580366601	STUD *For 96043024500, 96041041900, 96043029000*	1	-
358	599128101	STUD *For 96043030500, 96043029000, 96043032100*	1	-
359	584393401	ACTUATOR -	1	-
360	532448618	BRACKET -	1	-
361	596564002	BOLT *For 96043030500, 96043032100, 96043029000*	1	-
361	817490610	SCREW *For 96043024500, 96041041900, 96043029000*	1	-
362	532448633	CLEVIS PIN -	1	-
365	532447368	SPACER -	1	-
375	586908201	BUMPER -	1	-
378	590849801	BUSHING -	1	-
379	593206902	PLATE -	1	-
1	581578901	DECAL	1	-

Ref.	Article N.	Description	Qty	Kit
		For 96043024500, 96043029000, 96043030500		
1	581579001	DECAL *For 96043024500, 96043029000*	1	-
1	586047302	DECAL *For 96041041900*	1	-
2	589357901	DECAL -	1	-
2	589357902	DECAL *For 96043032100*	1	-
3	592898301	DECAL *For 96043024500*	1	-
4	591164701	DECAL *For 96041041900, 96043029000, 96043030500, 96043032100*	1	-
5	587015101	DECAL *For 96043024500, 96043029000*	1	-
5	597470101	DECAL *For 96043030500, 96043032100*	1	-
6	596024201	DECAL *For 96043030500*	1	-
7	590885101	DECAL *For 96043024500*	1	-
7	593808801	DECAL *For 96041041900, 96043029000, 96043030500, 96043032100*	1	-
8	586978801	DECAL -	1	-
9	591164701	DECAL *For 96041041900, 96043029000, 96043030500, 96043032100*	1	-
10	501082601	DECAL *For 96041041900*	1	-
11	592898301	DECAL *For 96043024500*	1	-
14	591448701	DECAL -	1	-
15	532423829	DECAL *For 96043024500, 96041041900, 96043029000, 96043030500*	1	-
16	581627301	DECAL -	1	-
17	590937401	DECAL *For 96043024500, 96043030500, 96043032100*	1	-
17	594110601	DECAL *For 96041041900. (582 45 79-01) DECAL.*	1	-
17	596970801	DECAL *For 96043029000*	1	-

Ref.	Article N.	Description	Qty	Kit
30	581579001	DECAL *For 96043024500, 96043029000*	1	-
31	586742201	DECAL *For 96043024500, 96043029000*	1	-
32	581724801	DECAL -	1	-
33	581724802	DECAL *For 96043032100*	1	-
34	532439882	PAD -	1	-
35	532439881	PAD -	1	-
1	900000002	DUMMY PART *TRANSAXLE TUFFTORQ K66ELD (580402201)*	1	-
2	539912757	KEY -	1	-
3	532007563	WASHER -	1	-
7	586935402	HUB -	1	-
9	532140080	BOLT *For 96043024500, 96041041900, 96043029000*	1	-
9	596218701	BOLT *For 96043030500, 96043032100, 96043029000*	1	-
15	596565301	WASHER *For 96043029000, 96043032100*	1	-
15	819131316	WASHER -	1	-
17	532401072	SPRING -	1	-
26	532199679	SPRING -	1	-
29	532407245	ROD -	1	-
33	812000053	E-CLIP -	1	-
35	590605902	ROD *For 96043024500, 96043029000, 96043030500, 96043032100*	1	-
35	583864501	ROD *For 96041041900*	1	-
42	532008883	PEDAL -	1	-
49	596136201	BOLT	1	-

Ref.	Article N.	Description	Qty	Kit
		For 96043030500, 96043032100, 96043029000		
49	872110614	BOLT *For 96043024500, 96041041900, 96043029000*	1	-
50	532194327	PULLEY -	1	-
51	873900600	NUT -	1	-
52	532194326	PULLEY -	1	-
56	592855301	DRIVE BELT -	1	-
64	532197865	SHAFT -	1	-
69	583404901	PIN *For 96043024500*	1	-
69	532423303	HAIR PIN COTTER *For 96041041900, 96043029000, 96043030500, 96043032100*	1	-
70	532439661	CONSOLE -	1	-
73	595316601	BOLT *For 96043030500, 96043032100, 96043029000*	1	-
73	874490544	SCREW *For 96043024500, 96041041900, 96043029000*	1	-
74	596134101	SCREW *For 96043030500, 96043032100, 96043029000*	1	-
74	532142432	SCREW *For 96043024500, 96041041900, 96043029000*	1	-
80	589333402	STRAP -	1	-
92	595305701	SCREW -	1	-
99	582404701	ROD -	1	-
116	596135701	LOCK NUT -	1	-
125	817000512	SCREW -	1	-
153	532004497	CLIP -	1	-
159	596029501	PIN *For 96043030500, 96043032100, 96043029000*	1	-
159	876020412	SPLIT PIN *For 96043024500, 96041041900, 96043029000*	1	-

Ref.	Article N.	Description	Qty	Kit
161	532105709	SPRING -	1	-
163	532407246	ROD -	1	-
166	532429164	NUT -	1	-
167	532405257	LATCH -	1	-
170	532194322	KEEPER -	1	-
171	596136301	BOLT -	1	-
177	587225301	PIN *For 96043030500, 96043032100, 96043029000*	1	-
177	532169484	PIN *For 96043024500, 96041041900, 96043029000*	1	-
177	596029401	RETAINER *For 96043030500, 96043032100, 96043029000*	1	-
183	598873002	SPACER *For 96043032100*	1	-
183	587587401	SPACER -	1	-
184	587653701	HANDLE -	1	-
185	872110622	BOLT -	1	-
186	532194321	SPACER -	1	-
187	596135501	WASHER -	1	-
188	582217001	LINK -	1	-
189	532194317	PLATE -	1	-
190	532194318	BELT GUIDE -	1	-
196	817000616	SCREW -	1	-
197	585658601	CLUTCH *For 96043024500, 96041041900*	1	-
197	587402001	BRACKET *For 96043029000*	1	-
197	585658602	BOSS	1	-

Ref.	Article N.	Description	Qty	Kit
		For 96043030500, 96043032100, 96043029000		
205	532123800	WASHER -	1	-
206	532448596	BRACKET -	1	-
207	587031402	LATCH *For 96043030500, 96043032100, 96043029000*	1	-
207	587031401	LATCH *For 96043024500, 96041041900, 96043029000*	1	-
208	532197869	SUPPORT *For 96043024500, 96041041900, 96043029000*	1	-
208	596564101	GEAR *For 96043030500, 96043032100, 96043029000*	1	-
209	590527802	ROD *For 96043024500, 96043029000, 96043030500, 96043032100*	1	-
209	532199592	ROD *For 96041041900*	1	-
210	532197860	ARM *RH*	1	-
211	532120183	BEARING -	1	-
213	532403119	CONTROL -	1	-
214	532421263	PAD -	1	-
215	586606502	PEDAL -	1	-
220	532198908	LENS *RH*	1	-
221	532403187	SPRING -	1	-
222	879212010	WASHER -	1	-
225	532407311	KEEPER -	1	-
226	532407109	BRACKET -	1	-
282	874490548	BOLT -	1	-
366	580626201	BRACKET *For 96043024500, 96041041900*	1	-
366	580626202	BRACKET *For 96043029000, 96043030500, 96043032100*	1	-

Ref.	Article N.	Description	Qty	Kit
366	592878002	BRACKET *For 96043029000, 96043032100*	1	-
1	532163465	BATTERY -	1	-
2	874760412	BOLT -	1	-
8	587205101	TRAY -	1	-
16	532176138	MICRO SWITCH -	1	-
21	532400252	HARNESS *For 96043024500*	1	-
21	585436401	HARNESS *For 96041041900*	1	-
24	585555601	CABLE *For 96043024500*	1	-
24	590223801	PRIMARY CABLE *For 96041041900*	1	-
25	585555501	CABLE -	1	-
26	532175158	FUSE -	1	-
27	586668901	NUT -	1	-
28	532416588	CABLE *For 96043024500*	1	-
28	590223702	GROUND CABLE *For 96041041900*	1	-
29	532401545	SWITCH *For 96043024500*	1	-
29	587648401	SWITCH *For 96041041900*	1	-
30	532193350	IGNITION MODULE -	1	-
33	532411935	KEY *For 96041041900*	1	-
33	532411933	KEY *For 96043024500*	1	-
34	532110712	SWITCH -	1	-
40	501133101	HARNESS *For 96043024500*	1	-
40	590193201	WIRING ASSY	1	-

Ref.	Article N.	Description	Qty	Kit
		For 96041041900		
41	817720408	SCREW -	1	-
42	532131563	COVER -	1	-
43	582042801	SOLENOID -	1	-
45	590645901	GAUGE *For 96041041900*	1	-
45	587553903	GAUGE *For 96043024500*	1	-
46	594721501	GAUGE *For 96041041900*	1	-
46	587554003	GAUGE *For 96043024500*	1	-
50	582107601	SWITCH -	1	-
55	817060512	SCREW -	1	-
71	532194276	CABLE ASSY *For 96043024500*	1	-
71	590193302	WIRING ASSY *For 96041041900*	1	-
75	580366401	SWITCH *For 96041041900*	1	-
90	532435395	TERMINAL COVER -	1	-
99	817670412	SCREW -	1	-
100	819091416	WASHER -	1	-
102	532404454	CABLE -	1	-
105	532407568	SWITCH *For 96043024500*	1	-
144	590568001	CONTROL UNIT -	1	-
146	590193401	WIRING ASSY -	1	-
1	532163465	BATTERY -	1	-
2	874760412	BOLT -	1	-

Ref.	Article N.	Description	Qty	Kit
8	532414126	TRAY *For 96043030500*	1	-
8	587205101	TRAY *For 96043029000, 96043032100*	1	-
16	532176138	MICRO SWITCH -	1	-
21	585436401	HARNESS -	1	-
24	585555601	CABLE -	1	-
25	585555501	CABLE -	1	-
26	532175158	FUSE -	1	-
27	586668901	NUT *For 96043029000*	1	-
27	596133601	LOCK NUT *For 96043030500, 96043032100, 96043029000*	1	-
28	532416588	CABLE -	1	-
29	532192749	SWITCH -	1	-
30	532193350	IGNITION MODULE -	1	-
33	532411935	KEY -	1	-
34	532110712	SWITCH -	1	-
40	501133601	HARNESS -	1	-
41	817720408	SCREW -	1	-
42	532131563	COVER -	1	-
43	582042801	SOLENOID *For 96043029000*	1	-
43	582042802	SOLENOID *For 96043030500, 96043032100, 96043029000*	1	-
45	587553903	GAUGE *For 96043029000*	1	-
45	587553906	GAUGE *For 96043030500, 96043032100, 96043029000*	1	-
46	587554003	GAUGE	1	-

Ref.	Article N.	Description	Qty	Kit
		For 96043029000		
46	587554006	GAUGE *For 96043030500, 96043032100, 96043029000*	1	-
50	582107601	SWITCH -	1	-
50	582107602	SWITCH *for all models*	1	-
55	817060512	SCREW -	1	-
59	532400303	ELECTRICAL SYSTEM *For 96043029000*	1	-
59	596941001	RECEPTACLE *For 96043030500, 96043032100, 96043029000*	1	-
71	580513001	HARNESS -	1	-
75	580366401	SWITCH -	1	-
90	532435395	TERMINAL COVER -	1	-
99	817670412	SCREW -	1	-
100	596135301	WASHER *For 96043030500, 96043032100, 96043029000*	1	-
100	819091416	WASHER *For 96043029000*	1	-
102	532404454	CABLE -	1	-
103	532421747	HARNESS -	1	-
105	532407568	SWITCH -	1	-
1	900000002	DUMMY PART *Engine Kohler Model No. KT745-3093 (596957201) For 96043029000*	1	-
2	589818701	MUFFLER	1	-
9	501832602	KEEPER	1	-
9	596501502	KEEPER	1	-
11	587241401	CLUTCH	1	-
12	586899601	PULLEY	1	-
15	532438030	FUEL TANK ASSY *Fits 2.75 filler neck*	1	-
15	532438024	FUEL TANK ASSY *Fits 2.75 filler neck*	1	-

Ref.	Article N.	Description	Qty	Kit
18	529989702	CAP *Fits 2.00 filler neck*	1	-
18	529989703	CAP *Fits 2.00 filler neck*	1	-
18	585124801	FUEL CAP ASSY *Fits 2.75 filler neck*	1	-
20	532424341	THROTTLE CONTROL	1	-
21	532416358	SCREW	1	-
21	596321701	SCREW	1	-
28	532401135	LINE	1	-
29	532137180	SPARK ARRESTER	1	-
37	532123487	HOSE CLAMP	1	-
41	532126197	WASHER	1	-
42	596238901	WASHER	1	-
42	539990247	WASHER	1	-
45	586668901	NUT	1	-
45	596133601	LOCK NUT	1	-
62	532434017	SHIELD	1	-
69	532178151	GASKET	1	-
70	583955601	TUBE *LH*	1	-
71	583955701	TUBE *RH*	1	-
81	532148456	TUBE	1	-
82	532428287	PLUG	1	-
85	501606901	BOLT	1	-
86	532184362	NUT	1	-
90	817000616	SCREW	1	-
91	532187495	BUSHING	1	-
92	817120616	SCREW	1	-
102	817000512	SCREW	1	-
116	539132624	KNOB	1	-
117	532420828	VALVE FUEL RESERVE	1	-
1	588549002	DECK SHELL ASSY *For 96043024500, 96041041900*	1	-
1	592618801	SERVICE KIT *For 96043029000, 96043030500, 96043032100*	1	-
1	592618901	SERVICE KIT *For 96041041900, 96043029000, 96043030500, 96043032100*	1	-
6	590304303	COVER	1	-

Ref.	Article N.	Description	Qty	Kit
		-		
7	590304203	COVER *For 96043024500, 96041041900, 96043030500, 96043032100, 96043029000*	1	-
8	532193003	SCREW -	1	-
11	582760508	BLADE *For 96043029000, 96043032100*	1	-
11	582760502	BLADE *For 96043024500, 96041041900, 96043030500, 96043029000, 96043032100*	1	-
14	539131898	SPINDLE *Aluminium*	1	-
20	532197236	SPACER -	1	-
22	596564003	BOLT -	1	-
22	599972501	BOLT *For 96043030500*	1	-
23	588438301	SCREW -	1	-
24	532105304	HUB CAP -	1	-
25	587354701	SPRING -	1	-
26	532110452	NUT -	1	-
27	590632201	DEFLECTOR ASSY -	1	-
28	596240801	BOLT *For 96043030500, 96043032100, 96043029000*	1	-
28	539115574	EYE BOLT *For 96043024500, 96041041900, 96043029000*	1	-
29	532131491	SHAFT *For 96043024500, 96041041900, 96043029000*	1	-
29	595297001	ROD *For 96043030500, 96043032100, 96043029000*	1	-
31	532187690	WASHER -	1	-
32	532173435	PULLEY *For 96043024500, 96041041900, 96043029000*	1	-
32	532173436	PULLEY *For 96043030500, 96043032100*	1	-
33	596134801	HEXAGON NUT *For 96043030500, 96043032100, 96043029000*	1	-

Ref.	Article N.	Description	Qty	Kit
33	532400234	NUT *For 96043024500, 96041041900, 96043029000*	1	-
34	596322601	NUT *For 96043030500, 96043032100, 96043024500, 96043029000*	1	-
34	873680600	NUT *For 96041041900, 96043029000*	1	-
36	596039201	LOCK NUT *For 96043030500, 96043032100, 96043029000*	1	-
36	539990585	NUT *For 96043024500, 96041041900, 96043029000*	1	-
37	532170165	BOLT -	1	-
41	584953901	BOLT -	1	-
42	596952201	PLUG *For 96043024500, 96041041900, 96043030500, 96043029000, 96043032100*	1	-
43	582219602	ARM -	1	-
46	532137729	SCREW -	1	-
47	582236301	DRIVE BELT -	1	-
48	574196502	TUBE -	1	-
49	873900600	NUT -	1	-
51	574169601	ROLLER -	1	-
52	532197379	PULLEY -	1	-
53	872140864	BOLT *For 96043024500, 96041041900, 96043029000*	1	-
53	594944501	BOLT *For 96043030500, 96043032100, 96043029000*	1	-
54	521991101	NUT *For 96043024500, 96041041900, 96043029000, 96043032100*	1	-
54	521991102	NUT *For 96043030500, 96043029000, 96043032100*	1	-
61	596274401	ROD *For 96043030500, 96043032100, 96043029000*	1	-
61	532400337	TIGE ANTI-ROULIS *For 96043024500, 96041041900, 96043029000*	1	-
62	596133201	WASHER	1	-

Ref.	Article N.	Description	Qty	Kit
		For 96043030500, 96043032100, 96043029000		
62	596134901	WASHER *For 96043024500, 96041041900, 96043029000*	1	-
63	532194208	PIN -	1	-
66	590732501	BUMPER ASSY -	1	-
97	532178515	WASHER -	1	-
98	587358401	SPRING -	1	-
109	532416405	COUPLING -	1	-
116	596434404	BOLT -	1	-
117	589527301	WHEEL -	1	-
184	596135701	LOCK NUT *For 96043029000*	1	-
187	593824001	STUD *For 96043029000, 96043030500, 96043032100*	1	-
187	532195161	STUD -	1	-
189	532195185	ARM *For 96043024500*	1	-
189	587140502	ARM *For 96041041900, 96043029000, 96043030500, 96043032100*	1	-
190	532196539	BOLT -	1	-
192	532198468	BELT GUIDE -	1	-
196	872140620	BOLT *For 96043024500, 96041041900*	1	-
196	596337801	BOLT *For 96043030500, 96043029000, 96043032100*	1	-
196	539128101	BOLT *For 96043029000, 96043032100*	1	-
242	532415598	HOSE COUPLING -	1	-
2	532422027	SHAFT -	1	-
3	596270601	LEVER *For 96043030500, 96043032100, 96043029000*	1	-

Ref.	Article N.	Description	Qty	Kit
3	532195230	LEVER *For 96043024500, 96041041900, 96043029000*	1	-
7	580962301	GRIP -	1	-
10	532196314	SPRING -	1	-
41	532175994	NUT *For 96043024500, 96041041900, 96043029000*	1	-
41	589464902	NUT *For 96043030500, 96043032100, 96043029000*	1	-
87	532194209	SPRING -	1	-
88	532195301	SPRING *For 96043029000, 96043030500, 96043032100*	1	-
88	532195304	SPRING -	1	-
89	819191912	WASHER -	1	-
91	532403407	LINK *For 96043024500, 96041041900, 96043029000*	1	-
91	589464805	LINK ASSY *For 96043030500, 96043032100, 96043029000*	1	-
96	532195263	BUSHING *For 96043024500, 96041041900, 96043029000*	1	-
96	593842101	BUSHING *For 96043030500, 96043032100, 96043029000*	1	-
97	817000612	SCREW -	1	-
98	589318703	DECK ATTACHMENT -	1	-
114	873360700	NUT -	1	-
1	900000002	DUMMY PART	1	-
1	588556701	SEAT *For 96043024500*	1	-
1	590337301	SEAT *For 96043030500, 96043032100*	1	-
1	590337302	SEAT *For 96041041900, 96043029000*	1	-
2	590336602	BRACKET -	1	-
3	590777602	BRACKET -	1	-

Ref.	Article N.	Description	Qty	Kit
6	521996501	NUT *For 96043024500, 96041041900, 96043029000*	1	-
6	521996502	NUT *For 96043030500, 96043032100, 96043029000*	1	-
7	590812301	SPRING -	1	-
8	532171877	BOLT -	1	-
10	590481702	BRACKET -	1	-
19	590691501	KNOB -	1	-
21	596231101	BOLT -	1	-
37	594944401	NUT *For 96043029000, 96043030500, 96043032100*	1	-
37	539112899	NUT, 5/16-18, NYLOC -	1	-
42	532199371	WASHER -	1	-
47	590351101	WASHER -	1	-
1	532439740	STEERING WHEEL *For 96043024500, 96041041900, 96043029000*	1	-
1	597866101	SERVICE KIT *For 96043030500, 96043032100. Steering wheel and steering cap.*	1	-
2	532195968	SHAFT *FRONT*	1	-
4	532403089	SPINDLE SHAFT *LH*	1	-
5	532403090	SPINDLE SHAFT *RH*	1	-
6	532006266	WASHER -	1	-
7	532121748	WASHER -	1	-
8	812000029	RETAINER RING -	1	-
9	532121232	HUB CAP -	1	-
13	532121749	WASHER -	1	-
14	596238701	WASHER	1	-

Ref.	Article N.	Description	Qty	Kit
		For 96043030500, 96043032100, 96043029000		
14	539990118	WASHER *For 96043024500, 96041041900, 96043029000*	1	-
15	873540600	NUT -	1	-
16	587016002	SHAFT -	1	-
19	532194729	PLATE -	1	-
21	586840201	ADAPTER -	1	-
22	585029901	BEARING -	1	-
26	532439743	HUB CAP *For 96043024500, 96041041900, 96043029000*	1	-
26	594949101	CAP *For 96043030500, 96043032100*	1	-
27	596933401	WASHER *For 96043030500, 96043032100, 96043029000*	1	-
27	819211616	WASHER *For 96043024500, 96041041900, 96043029000*	1	-
28	817000612	SCREW *For 96041041900, 96043029000, 96043030500, 96043032100*	1	-
29	817000612	SCREW *For 96041041900, 96043029000, 96043030500, 96043032100*	1	-
35	532194732	PLATE -	1	-
45	587016401	WASHER -	1	-
50	873900600	NUT -	1	-
53	532188967	WASHER -	1	-
54	874760636	BOLT -	1	-
55	532414736	SPACER -	1	-
58	532194747	BOLT -	1	-
59	532194748	WASHER -	1	-
60	873971000	NUT -	1	-

Ref.	Article N.	Description	Qty	Kit
61	588794402	LINK ASSY *For 96043024500, 96041041900, 96043029000. LH.*	1	-
61	597070202	LINKAGE *For 96043030500, 96043032100, 96043029000. LH.*	1	-
62	588794502	LINK ASSY *For 96043024500, 96041041900, 96043029000. RH.*	1	-
62	597070302	LINKAGE *For 96043030500, 96043032100, 96043029000. RH.*	1	-
63	817000512	SCREW -	1	-
64	532199849	SPRING RETAINER -	1	-
65	532194734	BRACKET *FRONT*	1	-
66	871020748	BOLT -	1	-
67	532194737	BUSHING *FRONT*	1	-
68	873900700	NUT -	1	-
69	532199162	WASHER -	1	-
70	585338801	BRACKET -	1	-
75	587738906	KIT *Includes pinion and screw*	1	-
76	580683601	SCREW -	1	-
78	532057079	WASHER -	1	-
122	532444962	CAP -	1	-
1	532059192	CAP -	1	-
2	532065139	NIPPLE -	1	-
3	532181839	RIM ASSY *Front*	1	-
4	532008134	HOSE *Front (Service Item Only)*	1	-
5	532161024	TIRE *For 96043024500. FRONT (16 X 6.5-8).*	1	-
5	593145101	TIRE	1	-

Ref.	Article N.	Description	Qty	Kit
		For 96041041900, 96043029000, 96043030500, 96043032100. FRONT (16 X 6.5-8).		
6	532000278	NIPPLE *Front Wheel Only*	1	-
7	532009040	BEARING *Front Wheel Only*	1	-
8	532175039	HUB CAP *Front Wheel Only*	1	-
9	532170453	TIRE *For 96043024500. REAR (23 X 10.5-12).*	1	-
9	593145201	TIRE *For 96041041900, 96043029000, 96043030500, 96043032100. REAR (23 X 10.5-12).*	1	-
10	532007154	HOSE *Rear (Service Item Only*	1	-
11	532144510	WHEEL *For 96043024500, 96041041900, 96043029000. Rear.*	1	-
11	593144801	TIRE *For 96043030500, 96043032100. Rear.*	1	-
12	501503101	CAP -	1	-
16	532144334	SEALING FOAM *For 96043030500*	1	-
1	900000002	DUMMY PART *ENGINE KAWA MODEL NO. FR730V-ES04 (445363)*	1	-
2	589818701	MUFFLER -	1	-
9	501832602	KEEPER -	1	-
9	596501502	KEEPER *For 96043030500, 96043032100*	1	-
11	587241401	CLUTCH -	1	-
12	532194343	PULLEY -	1	-
15	532422909	FUEL TANK *Fits 2.75 filler neck. For 96043030500*	1	-
15	598732401	FUEL TANK *Fits 2.75 filler neck. For 96043032100*	1	-
15	590599402	TANK *Fits 2.75 filler neck. For 96043024500, 96041041900*	1	-
18	597478501	FUEL CAP ASSY *Fits 2.75 filler neck. For 96043030500*	1	-

Ref.	Article N.	Description	Qty	Kit
18	529989702	CAP *Fits 2.00 filler neck*	1	-
18	529989703	CAP *Fits 2.00 filler neck*	1	-
18	585124801	FUEL CAP ASSY *Fits 2.75 filler neck. For 96043024500, 96041041900, 96043032100*	1	-
18	599502201	FUEL CAP ASSY *Fits 2.75 filler neck. For 96043030500*	1	-
20	532424341	THROTTLE CONTROL -	1	-
21	532416358	SCREW *For 96043024500, 96041041900*	1	-
21	596321701	SCREW *For 96043030500, 96043032100*	1	-
22	532189541	CHOKE CONTROL -	1	-
28	532401135	LINE *For 96043030500*	1	-
29	532137180	SPARK ARRESTER -	1	-
30	532401135	LINE *For 96043030500*	1	-
37	532123487	HOSE CLAMP *For 96043030500*	1	-
38	532123487	HOSE CLAMP *For 96043030500*	1	-
41	532126197	WASHER -	1	-
42	596238901	WASHER *For 96043030500, 96043032100*	1	-
42	539990247	WASHER *For 96043024500, 96041041900*	1	-
45	586668901	NUT *For 96043024500, 96041041900*	1	-
45	596133601	LOCK NUT *For 96043030500, 96043032100*	1	-
62	532434017	SHIELD -	1	-
69	532178151	GASKET -	1	-
70	583955601	TUBE *LH*	1	-
71	583955701	TUBE	1	-

Ref.	Article N.	Description	Qty	Kit
		RH		
81	532148456	TUBE -	1	-
85	501606901	BOLT -	1	-
86	532184362	NUT -	1	-
90	817000616	SCREW -	1	-
91	532187495	BUSHING -	1	-
92	817120616	SCREW -	1	-
102	817000512	SCREW -	1	-
109	532414114	FILTER *For 96043030500*	1	-
110	532414118	VALVE ASSY *For 96043030500*	1	-
112	532401135	LINE *For 96043030500*	1	-
113	532414127	VALVE *For 96043030500*	1	-
116	539132624	KNOB -	1	-
117	532420828	VALVE FUEL RESERVE *For 96043030500, 96043032100*	1	-
138	532420718	PURGE *For 96043030500*	1	-
138	596941501	TUBE *For 96043030500*	1	-
143	590044401	SENSOR *For 96043024500, 96041041900*	1	-

SCHEMATIC

SCH27

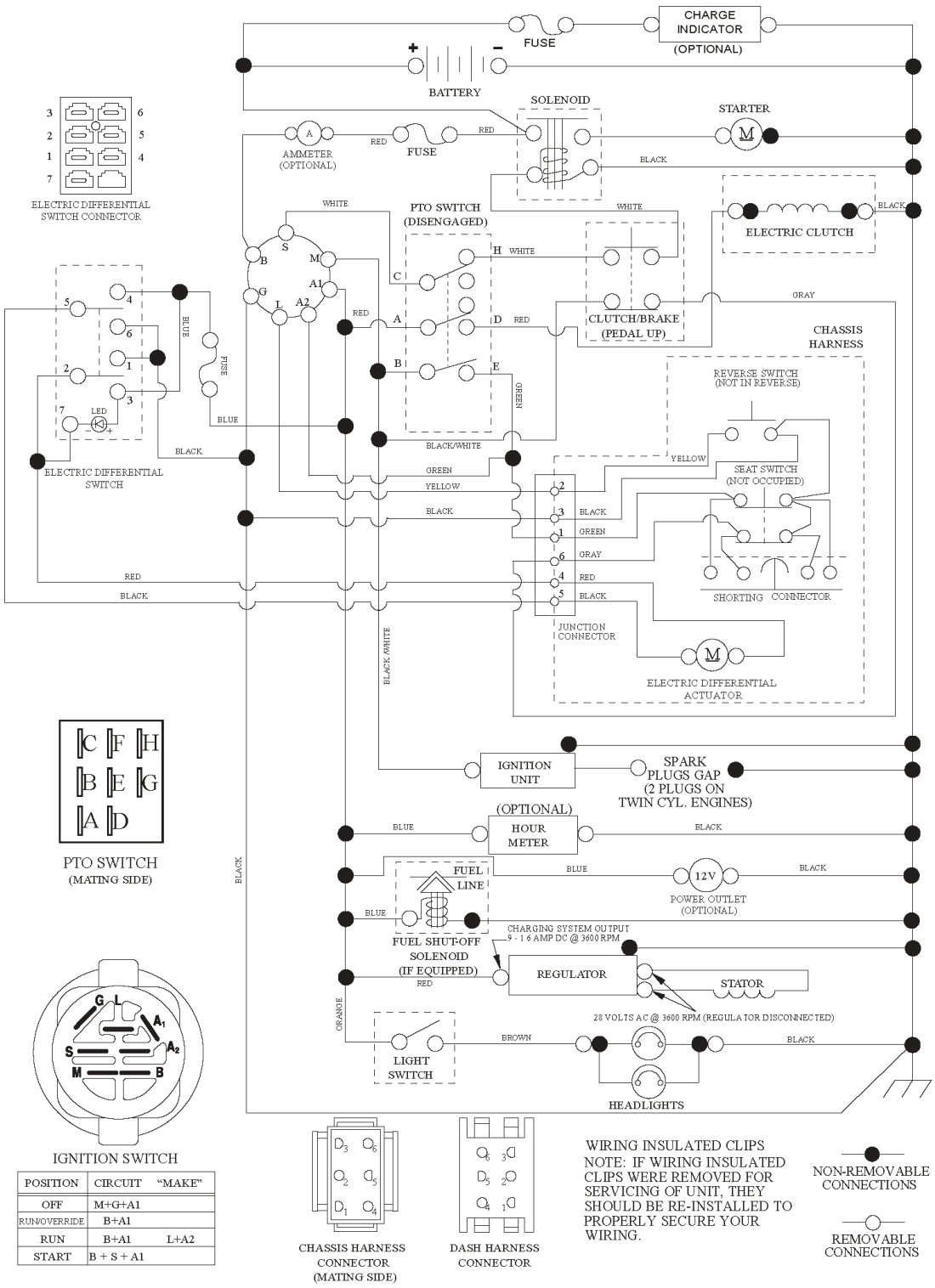

POSITION	CIRCUIT	"MAKE"
OFF	M+G+A1	
RUN/OVERRIDE	B+A1	
RUN	B+A1	L+A2
START	B + S + A1	

Ref.	Article N.	Description	Qty	Kit
2	580434401	DRAWBAR -	1	-
3	532444481	LOGOTYPE -	1	-
5	590748817	DASHBOARD *For 96043029000*	1	-

Ref.	Article N.	Description	Qty	Kit
5	590748819	DASHBOARD *For 96041041900, 96043030500, 96043032100*	1	-
5	590748822	DASHBOARD *For 96043024500*	1	-
14	532441177	HOOD -	1	-
15	585420301	LENS *LH*	1	-
18	597247301	GRILLE *For 96043032100 and 96043030500*	1	-
18	587523401	GRILLE -	1	-
19	596133201	WASHER *For 96043030500, 96043032100, 96043029000*	1	-
19	596134901	WASHER *For 96043024500, 96041041900, 96043029000*	1	-
25	585420201	LENS *RH*	1	-
36	817060512	SCREW -	1	-
37	532441208	FENDER *For 96043024500, 96043030500, 96043032100*	1	-
37	590534702	FENDER *For 96041041900, 96043029000*	1	-
58	532194314	BRACKET -	1	-
68	596030701	SCREW *For 96043030500, 96043032100, 96043029000*	1	-
68	539990858	SCREW *For 96043024500, 96041041900, 96043029000*	1	-
105	532431882	GUARD -	1	-
125	581684801	CLIP -	1	-
130	532416358	SCREW *For 96043024500, 96041041900, 96043029000*	1	-
130	596321701	SCREW *For 96043030500, 96043032100, 96043029000*	1	-
137	532407590	BUMPER -	1	-
146	581857901	BOLT -	1	-
150	532439774	AIR DUCT	1	-

Ref.	Article N.	Description	Qty	Kit
		-		
151	532436670	BRACKET -	1	-
152	532439870	SHIELD -	1	-
159	817000612	SCREW -	1	-
161	532439929	CONSOLE *For 96043032100*	1	-
161	532401801	CONSOLE *For 96043024500, 96043029000, 96043030500*	1	-
162	596134101	SCREW *For 96043030500, 96043032100, 96043029000*	1	-
162	532142432	SCREW *For 96043024500, 96041041900, 96043029000*	1	-
165	532194330	SUPPORT -	1	-
175	590607702	CROSS MEMBER -	1	-
176	532400776	SCREW -	1	-
177	532195228	BUSHING -	1	-
179	532168937	WASHER -	1	-
180	593346301	CHASSIS -	1	-
182	532406859	DASH -	1	-
183	595305701	SCREW *For 96043030500, 96043032100, 96043029000*	1	-
183	874520520	BOLT *For 96043024500, 96041041900, 96043029000*	1	-
189	817000512	SCREW -	1	-
191	586182801	REFLECTOR -	1	-
194	596135701	LOCK NUT *For 96043030500, 96043032100, 96043029000*	1	-
194	873900500	NUT *For 96043024500, 96041041900, 96043029000*	1	-
195	532404137	PLUG *For 96043024500, 96041041900*	1	-

Ref.	Article N.	Description	Qty	Kit
196	532439674	CONSOLE *For 96043024500, 96041041900, 96043029000, 96043030500*	1	-
196	532439716	CONSOLE *For 96043032100*	1	-
199	532198259	PLATE -	1	-
202	532439728	COVER *RH*	1	-
203	532439727	COVER *LH*	1	-
204	587485801	VENT -	1	-
205	532439730	TRIM *RH*	1	-
206	532439729	TRIM *LH*	1	-
207	585420002	BEZEL *RH*	1	-
208	585420102	BEZEL *LH*	1	-
214	532199145	CLIP -	1	-
217	532409167	ROD -	1	-
221	532198909	LENS *LH*	1	-
228	593824001	STUD *For 96043029000, 96043032100*	1	-
228	532195161	STUD -	1	-
235	532406129	SPACER *For 96043024500, 96041041900, 96043029000*	1	-
235	596564201	SPACER *For 96043030500, 96043032100, 96043029000*	1	-
236	873930500	NUT -	1	-
281	817000616	SCREW -	1	-
296	585420501	LIGHT -	1	-
297	586182901	REFLECTOR -	1	-
299	585420401	LIGHT	1	-

Ref.	Article N.	Description	Qty	Kit
		-		
306	873900600	NUT -	1	-
335	532448204	COVER -	1	-
336	532445309	COVER -	1	-
350	532445143	CLIP -	1	-
351	532421734	PEN -	1	-
352	532448634	CLEVIS PIN -	1	-
353	532178062	CLIP -	1	-
354	532448619	SUPPORT -	1	-
354	593196901	SUPPORT *For 96043029000, 96043030500, 96043029000, 96043032100*	1	-
355	532448636	BELLCRANK -	1	-
356	532448693	LINK -	1	-
357	532448684	COMPRESSION SPRING -	1	-
358	580366601	STUD *For 96043024500, 96041041900, 96043029000*	1	-
358	599128101	STUD *For 96043030500, 96043029000, 96043032100*	1	-
359	584393401	ACTUATOR -	1	-
360	532448618	BRACKET -	1	-
361	596564002	BOLT *For 96043030500, 96043032100, 96043029000*	1	-
361	817490610	SCREW *For 96043024500, 96041041900, 96043029000*	1	-
362	532448633	CLEVIS PIN -	1	-
365	532447368	SPACER -	1	-
375	586908201	BUMPER -	1	-

Ref.	Article N.	Description	Qty	Kit
378	590849801	BUSHING -	1	-
379	593206902	PLATE -	1	-
1	581578901	DECAL *For 96043024500, 96043029000, 96043030500*	1	-
1	581579001	DECAL *For 96043024500, 96043029000*	1	-
1	586047302	DECAL *For 96041041900*	1	-
2	589357901	DECAL -	1	-
2	589357902	DECAL *For 96043032100*	1	-
3	592898301	DECAL *For 96043024500*	1	-
4	591164701	DECAL *For 96041041900, 96043029000, 96043030500, 96043032100*	1	-
5	587015101	DECAL *For 96043024500, 96043029000*	1	-
5	597470101	DECAL *For 96043030500, 96043032100*	1	-
6	596024201	DECAL *For 96043030500*	1	-
7	590885101	DECAL *For 96043024500*	1	-
7	593808801	DECAL *For 96041041900, 96043029000, 96043030500, 96043032100*	1	-
8	586978801	DECAL -	1	-
9	591164701	DECAL *For 96041041900, 96043029000, 96043030500, 96043032100*	1	-
10	501082601	DECAL *For 96041041900*	1	-
11	592898301	DECAL *For 96043024500*	1	-
14	591448701	DECAL -	1	-
15	532423829	DECAL *For 96043024500, 96041041900, 96043029000, 96043030500*	1	-
16	581627301	DECAL -	1	-
17	590937401	DECAL	1	-

Ref.	Article N.	Description	Qty	Kit
		For 96043024500, 96043030500, 96043032100		
17	594110601	DECAL *For 96041041900. (582 45 79-01) DECAL.*	1	-
17	596970801	DECAL *For 96043029000*	1	-
30	581579001	DECAL *For 96043024500, 96043029000*	1	-
31	586742201	DECAL *For 96043024500, 96043029000*	1	-
32	581724801	DECAL -	1	-
33	581724802	DECAL *For 96043032100*	1	-
34	532439882	PAD -	1	-
35	532439881	PAD -	1	-
1	900000002	DUMMY PART *TRANSAXLE TUFFTORQ K66ELD (580402201)*	1	-
2	539912757	KEY -	1	-
3	532007563	WASHER -	1	-
7	586935402	HUB -	1	-
9	532140080	BOLT *For 96043024500, 96041041900, 96043029000*	1	-
9	596218701	BOLT *For 96043030500, 96043032100, 96043029000*	1	-
15	596565301	WASHER *For 96043029000, 96043032100*	1	-
15	819131316	WASHER -	1	-
17	532401072	SPRING -	1	-
26	532199679	SPRING -	1	-
29	532407245	ROD -	1	-
33	812000053	E-CLIP -	1	-
35	590605902	ROD *For 96043024500, 96043029000, 96043030500, 96043032100*	1	-

Ref.	Article N.	Description	Qty	Kit
35	583864501	ROD *For 96041041900*	1	-
42	532008883	PEDAL -	1	-
49	596136201	BOLT *For 96043030500, 96043032100, 96043029000*	1	-
49	872110614	BOLT *For 96043024500, 96041041900, 96043029000*	1	-
50	532194327	PULLEY -	1	-
51	873900600	NUT -	1	-
52	532194326	PULLEY -	1	-
56	592855301	DRIVE BELT -	1	-
64	532197865	SHAFT -	1	-
69	583404901	PIN *For 96043024500*	1	-
69	532423303	HAIR PIN COTTER *For 96041041900, 96043029000, 96043030500, 96043032100*	1	-
70	532439661	CONSOLE -	1	-
73	595316601	BOLT *For 96043030500, 96043032100, 96043029000*	1	-
73	874490544	SCREW *For 96043024500, 96041041900, 96043029000*	1	-
74	596134101	SCREW *For 96043030500, 96043032100, 96043029000*	1	-
74	532142432	SCREW *For 96043024500, 96041041900, 96043029000*	1	-
80	589333402	STRAP -	1	-
92	595305701	SCREW -	1	-
99	582404701	ROD -	1	-
116	596135701	LOCK NUT -	1	-
125	817000512	SCREW -	1	-
153	532004497	CLIP	1	-

Ref.	Article N.	Description	Qty	Kit
		-		
159	596029501	PIN *For 96043030500, 96043032100, 96043029000*	1	-
159	876020412	SPLIT PIN *For 96043024500, 96041041900, 96043029000*	1	-
161	532105709	SPRING -	1	-
163	532407246	ROD -	1	-
166	532429164	NUT -	1	-
167	532405257	LATCH -	1	-
170	532194322	KEEPER -	1	-
171	596136301	BOLT -	1	-
177	587225301	PIN *For 96043030500, 96043032100, 96043029000*	1	-
177	532169484	PIN *For 96043024500, 96041041900, 96043029000*	1	-
177	596029401	RETAINER *For 96043030500, 96043032100, 96043029000*	1	-
183	598873002	SPACER *For 96043032100*	1	-
183	587587401	SPACER -	1	-
184	587653701	HANDLE -	1	-
185	872110622	BOLT -	1	-
186	532194321	SPACER -	1	-
187	596135501	WASHER -	1	-
188	582217001	LINK -	1	-
189	532194317	PLATE -	1	-
190	532194318	BELT GUIDE -	1	-
196	817000616	SCREW -	1	-

Ref.	Article N.	Description	Qty	Kit
197	585658601	CLUTCH *For 96043024500, 96041041900*	1	-
197	587402001	BRACKET *For 96043029000*	1	-
197	585658602	BOSS *For 96043030500, 96043032100, 96043029000*	1	-
205	532123800	WASHER -	1	-
206	532448596	BRACKET -	1	-
207	587031402	LATCH *For 96043030500, 96043032100, 96043029000*	1	-
207	587031401	LATCH *For 96043024500, 96041041900, 96043029000*	1	-
208	532197869	SUPPORT *For 96043024500, 96041041900, 96043029000*	1	-
208	596564101	GEAR *For 96043030500, 96043032100, 96043029000*	1	-
209	590527802	ROD *For 96043024500, 96043029000, 96043030500, 96043032100*	1	-
209	532199592	ROD *For 96041041900*	1	-
210	532197860	ARM *RH*	1	-
211	532120183	BEARING -	1	-
213	532403119	CONTROL -	1	-
214	532421263	PAD -	1	-
215	586606502	PEDAL -	1	-
220	532198908	LENS *RH*	1	-
221	532403187	SPRING -	1	-
222	879212010	WASHER -	1	-
225	532407311	KEEPER -	1	-
226	532407109	BRACKET -	1	-
282	874490548	BOLT	1	-

Ref.	Article N.	Description	Qty	Kit
		-		
366	580626201	BRACKET *For 96043024500, 96041041900*	1	-
366	580626202	BRACKET *For 96043029000, 96043030500, 96043032100*	1	-
366	592878002	BRACKET *For 96043029000, 96043032100*	1	-
1	532163465	BATTERY -	1	-
2	874760412	BOLT -	1	-
8	587205101	TRAY -	1	-
16	532176138	MICRO SWITCH -	1	-
21	532400252	HARNESS *For 96043024500*	1	-
21	585436401	HARNESS *For 96041041900*	1	-
24	585555601	CABLE *For 96043024500*	1	-
24	590223801	PRIMARY CABLE *For 96041041900*	1	-
25	585555501	CABLE -	1	-
26	532175158	FUSE -	1	-
27	586668901	NUT -	1	-
28	532416588	CABLE *For 96043024500*	1	-
28	590223702	GROUND CABLE *For 96041041900*	1	-
29	532401545	SWITCH *For 96043024500*	1	-
29	587648401	SWITCH *For 96041041900*	1	-
30	532193350	IGNITION MODULE -	1	-
33	532411935	KEY *For 96041041900*	1	-
33	532411933	KEY *For 96043024500*	1	-

Ref.	Article N.	Description	Qty	Kit
34	532110712	SWITCH -	1	-
40	501133101	HARNESS *For 96043024500*	1	-
40	590193201	WIRING ASSY *For 96041041900*	1	-
41	817720408	SCREW -	1	-
42	532131563	COVER -	1	-
43	582042801	SOLENOID -	1	-
45	590645901	GAUGE *For 96041041900*	1	-
45	587553903	GAUGE *For 96043024500*	1	-
46	594721501	GAUGE *For 96041041900*	1	-
46	587554003	GAUGE *For 96043024500*	1	-
50	582107601	SWITCH -	1	-
55	817060512	SCREW -	1	-
71	532194276	CABLE ASSY *For 96043024500*	1	-
71	590193302	WIRING ASSY *For 96041041900*	1	-
75	580366401	SWITCH *For 96041041900*	1	-
90	532435395	TERMINAL COVER -	1	-
99	817670412	SCREW -	1	-
100	819091416	WASHER -	1	-
102	532404454	CABLE -	1	-
105	532407568	SWITCH *For 96043024500*	1	-
144	590568001	CONTROL UNIT -	1	-
146	590193401	WIRING ASSY	1	-

Ref.	Article N.	Description	Qty	Kit
		-		
1	532163465	BATTERY -	1	-
2	874760412	BOLT -	1	-
8	532414126	TRAY *For 96043030500*	1	-
8	587205101	TRAY *For 96043029000, 96043032100*	1	-
16	532176138	MICRO SWITCH -	1	-
21	585436401	HARNESS -	1	-
24	585555601	CABLE -	1	-
25	585555501	CABLE -	1	-
26	532175158	FUSE -	1	-
27	586668901	NUT *For 96043029000*	1	-
27	596133601	LOCK NUT *For 96043030500, 96043032100, 96043029000*	1	-
28	532416588	CABLE -	1	-
29	532192749	SWITCH -	1	-
30	532193350	IGNITION MODULE -	1	-
33	532411935	KEY -	1	-
34	532110712	SWITCH -	1	-
40	501133601	HARNESS -	1	-
41	817720408	SCREW -	1	-
42	532131563	COVER -	1	-
43	582042801	SOLENOID *For 96043029000*	1	-
43	582042802	SOLENOID *For 96043030500, 96043032100, 96043029000*	1	-

Ref.	Article N.	Description	Qty	Kit
45	587553903	GAUGE *For 96043029000*	1	-
45	587553906	GAUGE *For 96043030500, 96043032100, 96043029000*	1	-
46	587554003	GAUGE *For 96043029000*	1	-
46	587554006	GAUGE *For 96043030500, 96043032100, 96043029000*	1	-
50	582107601	SWITCH -	1	-
50	582107602	SWITCH *for all models*	1	-
55	817060512	SCREW -	1	-
59	532400303	ELECTRICAL SYSTEM *For 96043029000*	1	-
59	596941001	RECEPTACLE *For 96043030500, 96043032100, 96043029000*	1	-
71	580513001	HARNESS -	1	-
75	580366401	SWITCH -	1	-
90	532435395	TERMINAL COVER -	1	-
99	817670412	SCREW -	1	-
100	596135301	WASHER *For 96043030500, 96043032100, 96043029000*	1	-
100	819091416	WASHER *For 96043029000*	1	-
102	532404454	CABLE -	1	-
103	532421747	HARNESS -	1	-
105	532407568	SWITCH -	1	-
1	900000002	DUMMY PART *Engine Kohler Model No. KT745-3093 (596957201) For 96043029000*	1	-
2	589818701	MUFFLER	1	-
9	501832602	KEEPER	1	-
9	596501502	KEEPER	1	-
11	587241401	CLUTCH	1	-

Ref.	Article N.	Description	Qty	Kit
12	586899601	PULLEY	1	-
15	532438030	FUEL TANK ASSY *Fits 2.75 filler neck*	1	-
15	532438024	FUEL TANK ASSY *Fits 2.75 filler neck*	1	-
18	529989702	CAP *Fits 2.00 filler neck*	1	-
18	529989703	CAP *Fits 2.00 filler neck*	1	-
18	585124801	FUEL CAP ASSY *Fits 2.75 filler neck*	1	-
20	532424341	THROTTLE CONTROL	1	-
21	532416358	SCREW	1	-
21	596321701	SCREW	1	-
28	532401135	LINE	1	-
29	532137180	SPARK ARRESTER	1	-
37	532123487	HOSE CLAMP	1	-
41	532126197	WASHER	1	-
42	596238901	WASHER	1	-
42	539990247	WASHER	1	-
45	586668901	NUT	1	-
45	596133601	LOCK NUT	1	-
62	532434017	SHIELD	1	-
69	532178151	GASKET	1	-
70	583955601	TUBE *LH*	1	-
71	583955701	TUBE *RH*	1	-
81	532148456	TUBE	1	-
82	532428287	PLUG	1	-
85	501606901	BOLT	1	-
86	532184362	NUT	1	-
90	817000616	SCREW	1	-
91	532187495	BUSHING	1	-
92	817120616	SCREW	1	-
102	817000512	SCREW	1	-
116	539132624	KNOB	1	-
117	532420828	VALVE FUEL RESERVE	1	-
1	588549002	DECK SHELL ASSY *For 96043024500, 96041041900*	1	-

Ref.	Article N.	Description	Qty	Kit
1	592618801	SERVICE KIT *For 96043029000, 96043030500, 96043032100*	1	-
1	592618901	SERVICE KIT *For 96041041900, 96043029000, 96043030500, 96043032100*	1	-
6	590304303	COVER -	1	-
7	590304203	COVER *For 96043024500, 96041041900, 96043030500, 96043032100, 96043029000*	1	-
8	532193003	SCREW -	1	-
11	582760508	BLADE *For 96043029000, 96043032100*	1	-
11	582760502	BLADE *For 96043024500, 96041041900, 96043030500, 96043029000, 96043032100*	1	-
14	539131898	SPINDLE *Aluminium*	1	-
20	532197236	SPACER -	1	-
22	596564003	BOLT -	1	-
22	599972501	BOLT *For 96043030500*	1	-
23	588438301	SCREW -	1	-
24	532105304	HUB CAP -	1	-
25	587354701	SPRING -	1	-
26	532110452	NUT -	1	-
27	590632201	DEFLECTOR ASSY -	1	-
28	596240801	BOLT *For 96043030500, 96043032100, 96043029000*	1	-
28	539115574	EYE BOLT *For 96043024500, 96041041900, 96043029000*	1	-
29	532131491	SHAFT *For 96043024500, 96041041900, 96043029000*	1	-
29	595297001	ROD *For 96043030500, 96043032100, 96043029000*	1	-
31	532187690	WASHER -	1	-
32	532173435	PULLEY	1	-

Ref.	Article N.	Description	Qty	Kit
		For 96043024500, 96041041900, 96043029000		
32	532173436	PULLEY *For 96043030500, 96043032100*	1	-
33	596134801	HEXAGON NUT *For 96043030500, 96043032100, 96043029000*	1	-
33	532400234	NUT *For 96043024500, 96041041900, 96043029000*	1	-
34	596322601	NUT *For 96043030500, 96043032100, 96043024500, 96043029000*	1	-
34	873680600	NUT *For 96041041900, 96043029000*	1	-
36	596039201	LOCK NUT *For 96043030500, 96043032100, 96043029000*	1	-
36	539990585	NUT *For 96043024500, 96041041900, 96043029000*	1	-
37	532170165	BOLT -	1	-
41	584953901	BOLT -	1	-
42	596952201	PLUG *For 96043024500, 96041041900, 96043030500, 96043029000, 96043032100*	1	-
43	582219602	ARM -	1	-
46	532137729	SCREW -	1	-
47	582236301	DRIVE BELT -	1	-
48	574196502	TUBE -	1	-
49	873900600	NUT -	1	-
51	574169601	ROLLER -	1	-
52	532197379	PULLEY -	1	-
53	872140864	BOLT *For 96043024500, 96041041900, 96043029000*	1	-
53	594944501	BOLT *For 96043030500, 96043032100, 96043029000*	1	-
54	521991101	NUT *For 96043024500, 96041041900, 96043029000, 96043032100*	1	-
54	521991102	NUT *For 96043030500, 96043029000, 96043032100*	1	-

Ref.	Article N.	Description	Qty	Kit
61	596274401	ROD *For 96043030500, 96043032100, 96043029000*	1	-
61	532400337	TIGE ANTI-ROULIS *For 96043024500, 96041041900, 96043029000*	1	-
62	596133201	WASHER *For 96043030500, 96043032100, 96043029000*	1	-
62	596134901	WASHER *For 96043024500, 96041041900, 96043029000*	1	-
63	532194208	PIN -	1	-
66	590732501	BUMPER ASSY -	1	-
97	532178515	WASHER -	1	-
98	587358401	SPRING -	1	-
109	532416405	COUPLING -	1	-
116	596434404	BOLT -	1	-
117	589527301	WHEEL -	1	-
184	596135701	LOCK NUT *For 96043029000*	1	-
187	593824001	STUD *For 96043029000, 96043030500, 96043032100*	1	-
187	532195161	STUD -	1	-
189	532195185	ARM *For 96043024500*	1	-
189	587140502	ARM *For 96041041900, 96043029000, 96043030500, 96043032100*	1	-
190	532196539	BOLT -	1	-
192	532198468	BELT GUIDE -	1	-
196	872140620	BOLT *For 96043024500, 96041041900*	1	-
196	596337801	BOLT *For 96043030500, 96043029000, 96043032100*	1	-
196	539128101	BOLT *For 96043029000, 96043032100*	1	-
242	532415598	HOSE COUPLING	1	-

Ref.	Article N.	Description	Qty	Kit
		-		
2	532422027	SHAFT -	1	-
3	596270601	LEVER *For 96043030500, 96043032100, 96043029000*	1	-
3	532195230	LEVER *For 96043024500, 96041041900, 96043029000*	1	-
7	580962301	GRIP -	1	-
10	532196314	SPRING -	1	-
41	532175994	NUT *For 96043024500, 96041041900, 96043029000*	1	-
41	589464902	NUT *For 96043030500, 96043032100, 96043029000*	1	-
87	532194209	SPRING -	1	-
88	532195301	SPRING *For 96043029000, 96043030500, 96043032100*	1	-
88	532195304	SPRING -	1	-
89	819191912	WASHER -	1	-
91	532403407	LINK *For 96043024500, 96041041900, 96043029000*	1	-
91	589464805	LINK ASSY *For 96043030500, 96043032100, 96043029000*	1	-
96	532195263	BUSHING *For 96043024500, 96041041900, 96043029000*	1	-
96	593842101	BUSHING *For 96043030500, 96043032100, 96043029000*	1	-
97	817000612	SCREW -	1	-
98	589318703	DECK ATTACHMENT -	1	-
114	873360700	NUT -	1	-
1	900000002	DUMMY PART	1	-
1	588556701	SEAT *For 96043024500*	1	-
1	590337301	SEAT *For 96043030500, 96043032100*	1	-
1	590337302	SEAT	1	-

Ref.	Article N.	Description	Qty	Kit
		For 96041041900, 96043029000		
2	590336602	BRACKET -	1	-
3	590777602	BRACKET -	1	-
6	521996501	NUT *For 96043024500, 96041041900, 96043029000*	1	-
6	521996502	NUT *For 96043030500, 96043032100, 96043029000*	1	-
7	590812301	SPRING -	1	-
8	532171877	BOLT -	1	-
10	590481702	BRACKET -	1	-
19	590691501	KNOB -	1	-
21	596231101	BOLT -	1	-
37	594944401	NUT *For 96043029000, 96043030500, 96043032100*	1	-
37	539112899	NUT, 5/16-18, NYLOC -	1	-
42	532199371	WASHER -	1	-
47	590351101	WASHER -	1	-
1	532439740	STEERING WHEEL *For 96043024500, 96041041900, 96043029000*	1	-
1	597866101	SERVICE KIT *For 96043030500, 96043032100. Steering wheel and steering cap.*	1	-
2	532195968	SHAFT *FRONT*	1	-
4	532403089	SPINDLE SHAFT *LH*	1	-
5	532403090	SPINDLE SHAFT *RH*	1	-
6	532006266	WASHER -	1	-
7	532121748	WASHER -	1	-
8	812000029	RETAINER RING -	1	-

Ref.	Article N.	Description	Qty	Kit
9	532121232	HUB CAP -	1	-
13	532121749	WASHER -	1	-
14	596238701	WASHER *For 96043030500, 96043032100, 96043029000*	1	-
14	539990118	WASHER *For 96043024500, 96041041900, 96043029000*	1	-
15	873540600	NUT -	1	-
16	587016002	SHAFT -	1	-
19	532194729	PLATE -	1	-
21	586840201	ADAPTER -	1	-
22	585029901	BEARING -	1	-
26	532439743	HUB CAP *For 96043024500, 96041041900, 96043029000*	1	-
26	594949101	CAP *For 96043030500, 96043032100*	1	-
27	596933401	WASHER *For 96043030500, 96043032100, 96043029000*	1	-
27	819211616	WASHER *For 96043024500, 96041041900, 96043029000*	1	-
28	817000612	SCREW *For 96041041900, 96043029000, 96043030500, 96043032100*	1	-
29	817000612	SCREW *For 96041041900, 96043029000, 96043030500, 96043032100*	1	-
35	532194732	PLATE -	1	-
45	587016401	WASHER -	1	-
50	873900600	NUT -	1	-
53	532188967	WASHER -	1	-
54	874760636	BOLT -	1	-
55	532414736	SPACER -	1	-
58	532194747	BOLT	1	-

Ref.	Article N.	Description	Qty	Kit
		-		
59	532194748	WASHER -	1	-
60	873971000	NUT -	1	-
61	588794402	LINK ASSY *For 96043024500, 96041041900, 96043029000. LH.*	1	-
61	597070202	LINKAGE *For 96043030500, 96043032100, 96043029000. LH.*	1	-
62	588794502	LINK ASSY *For 96043024500, 96041041900, 96043029000. RH.*	1	-
62	597070302	LINKAGE *For 96043030500, 96043032100, 96043029000. RH.*	1	-
63	817000512	SCREW -	1	-
64	532199849	SPRING RETAINER -	1	-
65	532194734	BRACKET *FRONT*	1	-
66	871020748	BOLT -	1	-
67	532194737	BUSHING *FRONT*	1	-
68	873900700	NUT -	1	-
69	532199162	WASHER -	1	-
70	585338801	BRACKET -	1	-
75	587738906	KIT *Includes pinion and screw*	1	-
76	580683601	SCREW -	1	-
78	532057079	WASHER -	1	-
122	532444962	CAP -	1	-
1	532059192	CAP -	1	-
2	532065139	NIPPLE -	1	-
3	532181839	RIM ASSY *Front*	1	-

Ref.	Article N.	Description	Qty	Kit
4	532008134	HOSE *Front (Service Item Only)*	1	-
5	532161024	TIRE *For 96043024500. FRONT (16 X 6.5-8).*	1	-
5	593145101	TIRE *For 96041041900, 96043029000, 96043030500, 96043032100. FRONT (16 X 6.5-8).*	1	-
6	532000278	NIPPLE *Front Wheel Only*	1	-
7	532009040	BEARING *Front Wheel Only*	1	-
8	532175039	HUB CAP *Front Wheel Only*	1	-
9	532170453	TIRE *For 96043024500. REAR (23 X 10.5-12).*	1	-
9	593145201	TIRE *For 96041041900, 96043029000, 96043030500, 96043032100. REAR (23 X 10.5-12).*	1	-
10	532007154	HOSE *Rear (Service Item Only*	1	-
11	532144510	WHEEL *For 96043024500, 96041041900, 96043029000. Rear.*	1	-
11	593144801	TIRE *For 96043030500, 96043032100. Rear.*	1	-
12	501503101	CAP -	1	-
16	532144334	SEALING FOAM *For 96043030500*	1	-
1	900000002	DUMMY PART *ENGINE KAWA MODEL NO. FR730V-ES04 (445363)*	1	-
2	589818701	MUFFLER -	1	-
9	501832602	KEEPER -	1	-
9	596501502	KEEPER *For 96043030500, 96043032100*	1	-
11	587241401	CLUTCH -	1	-
12	532194343	PULLEY -	1	-
15	532422909	FUEL TANK *Fits 2.75 filler neck. For 96043030500*	1	-
15	598732401	FUEL TANK	1	-

Ref.	Article N.	Description	Qty	Kit
		Fits 2.75 filler neck. For 96043032100		
15	590599402	TANK *Fits 2.75 filler neck. For 96043024500, 96041041900*	1	-
18	597478501	FUEL CAP ASSY *Fits 2.75 filler neck. For 96043030500*	1	-
18	529989702	CAP *Fits 2.00 filler neck*	1	-
18	529989703	CAP *Fits 2.00 filler neck*	1	-
18	585124801	FUEL CAP ASSY *Fits 2.75 filler neck. For 96043024500, 96041041900, 96043032100*	1	-
18	599502201	FUEL CAP ASSY *Fits 2.75 filler neck. For 96043030500*	1	-
20	532424341	THROTTLE CONTROL -	1	-
21	532416358	SCREW *For 96043024500, 96041041900*	1	-
21	596321701	SCREW *For 96043030500, 96043032100*	1	-
22	532189541	CHOKE CONTROL -	1	-
28	532401135	LINE *For 96043030500*	1	-
29	532137180	SPARK ARRESTER -	1	-
30	532401135	LINE *For 96043030500*	1	-
37	532123487	HOSE CLAMP *For 96043030500*	1	-
38	532123487	HOSE CLAMP *For 96043030500*	1	-
41	532126197	WASHER -	1	-
42	596238901	WASHER *For 96043030500, 96043032100*	1	-
42	539990247	WASHER *For 96043024500, 96041041900*	1	-
45	586668901	NUT *For 96043024500, 96041041900*	1	-
45	596133601	LOCK NUT *For 96043030500, 96043032100*	1	-
62	532434017	SHIELD -	1	-

Ref.	Article N.	Description	Qty	Kit
69	532178151	GASKET -	1	-
70	583955601	TUBE *LH*	1	-
71	583955701	TUBE *RH*	1	-
81	532148456	TUBE -	1	-
85	501606901	BOLT -	1	-
86	532184362	NUT -	1	-
90	817000616	SCREW -	1	-
91	532187495	BUSHING -	1	-
92	817120616	SCREW -	1	-
102	817000512	SCREW -	1	-
109	532414114	FILTER *For 96043030500*	1	-
110	532414118	VALVE ASSY *For 96043030500*	1	-
112	532401135	LINE *For 96043030500*	1	-
113	532414127	VALVE *For 96043030500*	1	-
116	539132624	KNOB -	1	-
117	532420828	VALVE FUEL RESERVE *For 96043030500, 96043032100*	1	-
138	532420718	PURGE *For 96043030500*	1	-
138	596941501	TUBE *For 96043030500*	1	-
143	590044401	SENSOR *For 96043024500, 96041041900*	1	-

SEAT

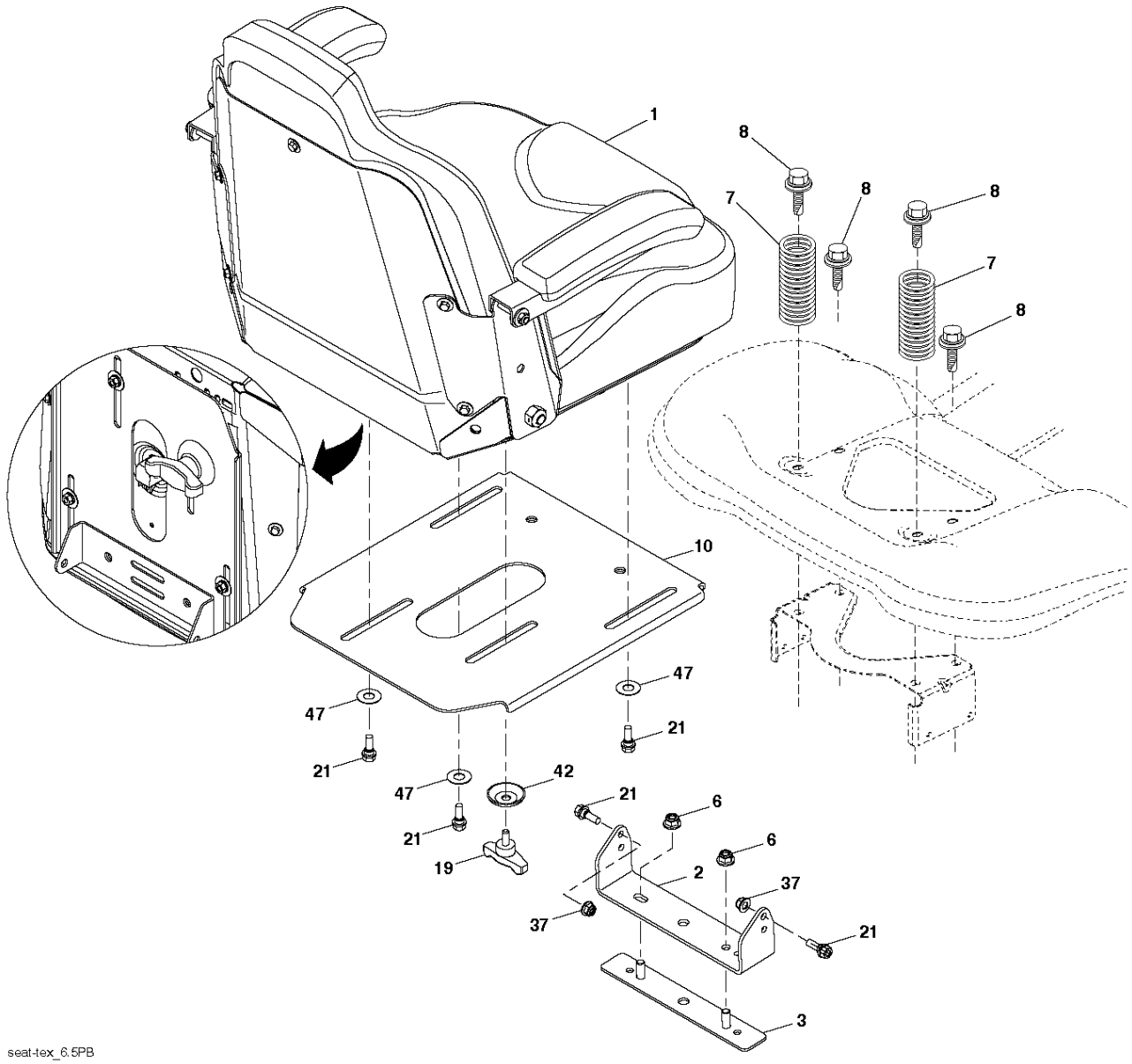

Ref.	Article N.	Description	Qty	Kit
2	580434401	DRAWBAR -	1	-
3	532444481	LOGOTYPE -	1	-
5	590748817	DASHBOARD *For 96043029000*	1	-
5	590748819	DASHBOARD *For 96041041900, 96043030500, 96043032100*	1	-
5	590748822	DASHBOARD *For 96043024500*	1	-
14	532441177	HOOD -	1	-
15	585420301	LENS	1	-

Ref.	Article N.	Description	Qty	Kit
		LH		
18	597247301	GRILLE *For 96043032100 and 96043030500*	1	-
18	587523401	GRILLE -	1	-
19	596133201	WASHER *For 96043030500, 96043032100, 96043029000*	1	-
19	596134901	WASHER *For 96043024500, 96041041900, 96043029000*	1	-
25	585420201	LENS *RH*	1	-
36	817060512	SCREW -	1	-
37	532441208	FENDER *For 96043024500, 96043030500, 96043032100*	1	-
37	590534702	FENDER *For 96041041900, 96043029000*	1	-
58	532194314	BRACKET -	1	-
68	596030701	SCREW *For 96043030500, 96043032100, 96043029000*	1	-
68	539990858	SCREW *For 96043024500, 96041041900, 96043029000*	1	-
105	532431882	GUARD -	1	-
125	581684801	CLIP -	1	-
130	532416358	SCREW *For 96043024500, 96041041900, 96043029000*	1	-
130	596321701	SCREW *For 96043030500, 96043032100, 96043029000*	1	-
137	532407590	BUMPER -	1	-
146	581857901	BOLT -	1	-
150	532439774	AIR DUCT -	1	-
151	532436670	BRACKET -	1	-
152	532439870	SHIELD -	1	-
159	817000612	SCREW -	1	-

Ref.	Article N.	Description	Qty	Kit
161	532439929	CONSOLE *For 96043032100*	1	-
161	532401801	CONSOLE *For 96043024500, 96043029000, 96043030500*	1	-
162	596134101	SCREW *For 96043030500, 96043032100, 96043029000*	1	-
162	532142432	SCREW *For 96043024500, 96041041900, 96043029000*	1	-
165	532194330	SUPPORT -	1	-
175	590607702	CROSS MEMBER -	1	-
176	532400776	SCREW -	1	-
177	532195228	BUSHING -	1	-
179	532168937	WASHER -	1	-
180	593346301	CHASSIS -	1	-
182	532406859	DASH -	1	-
183	595305701	SCREW *For 96043030500, 96043032100, 96043029000*	1	-
183	874520520	BOLT *For 96043024500, 96041041900, 96043029000*	1	-
189	817000512	SCREW -	1	-
191	586182801	REFLECTOR -	1	-
194	596135701	LOCK NUT *For 96043030500, 96043032100, 96043029000*	1	-
194	873900500	NUT *For 96043024500, 96041041900, 96043029000*	1	-
195	532404137	PLUG *For 96043024500, 96041041900*	1	-
196	532439674	CONSOLE *For 96043024500, 96041041900, 96043029000, 96043030500*	1	-
196	532439716	CONSOLE *For 96043032100*	1	-
199	532198259	PLATE -	1	-
202	532439728	COVER	1	-

Ref.	Article N.	Description	Qty	Kit
		RH		
203	532439727	COVER *LH*	1	-
204	587485801	VENT -	1	-
205	532439730	TRIM *RH*	1	-
206	532439729	TRIM *LH*	1	-
207	585420002	BEZEL *RH*	1	-
208	585420102	BEZEL *LH*	1	-
214	532199145	CLIP -	1	-
217	532409167	ROD -	1	-
221	532198909	LENS *LH*	1	-
228	593824001	STUD *For 96043029000, 96043032100*	1	-
228	532195161	STUD -	1	-
235	532406129	SPACER *For 96043024500, 96041041900, 96043029000*	1	-
235	596564201	SPACER *For 96043030500, 96043032100, 96043029000*	1	-
236	873930500	NUT -	1	-
281	817000616	SCREW -	1	-
296	585420501	LIGHT -	1	-
297	586182901	REFLECTOR -	1	-
299	585420401	LIGHT -	1	-
306	873900600	NUT -	1	-
335	532448204	COVER -	1	-
336	532445309	COVER -	1	-

Ref.	Article N.	Description	Qty	Kit
350	532445143	CLIP -	1	-
351	532421734	PEN -	1	-
352	532448634	CLEVIS PIN -	1	-
353	532178062	CLIP -	1	-
354	532448619	SUPPORT -	1	-
354	593196901	SUPPORT *For 96043029000, 96043030500, 96043029000, 96043032100*	1	-
355	532448636	BELLCRANK -	1	-
356	532448693	LINK -	1	-
357	532448684	COMPRESSION SPRING -	1	-
358	580366601	STUD *For 96043024500, 96041041900, 96043029000*	1	-
358	599128101	STUD *For 96043030500, 96043029000, 96043032100*	1	-
359	584393401	ACTUATOR -	1	-
360	532448618	BRACKET -	1	-
361	596564002	BOLT *For 96043030500, 96043032100, 96043029000*	1	-
361	817490610	SCREW *For 96043024500, 96041041900, 96043029000*	1	-
362	532448633	CLEVIS PIN -	1	-
365	532447368	SPACER -	1	-
375	586908201	BUMPER -	1	-
378	590849801	BUSHING -	1	-
379	593206902	PLATE -	1	-
1	581578901	DECAL *For 96043024500, 96043029000, 96043030500*	1	-
1	581579001	DECAL	1	-

Ref.	Article N.	Description	Qty	Kit
		For 96043024500, 96043029000		
1	586047302	DECAL *For 96041041900*	1	-
2	589357901	DECAL -	1	-
2	589357902	DECAL *For 96043032100*	1	-
3	592898301	DECAL *For 96043024500*	1	-
4	591164701	DECAL *For 96041041900, 96043029000, 96043030500, 96043032100*	1	-
5	587015101	DECAL *For 96043024500, 96043029000*	1	-
5	597470101	DECAL *For 96043030500, 96043032100*	1	-
6	596024201	DECAL *For 96043030500*	1	-
7	590885101	DECAL *For 96043024500*	1	-
7	593808801	DECAL *For 96041041900, 96043029000, 96043030500, 96043032100*	1	-
8	586978801	DECAL -	1	-
9	591164701	DECAL *For 96041041900, 96043029000, 96043030500, 96043032100*	1	-
10	501082601	DECAL *For 96041041900*	1	-
11	592898301	DECAL *For 96043024500*	1	-
14	591448701	DECAL -	1	-
15	532423829	DECAL *For 96043024500, 96041041900, 96043029000, 96043030500*	1	-
16	581627301	DECAL -	1	-
17	590937401	DECAL *For 96043024500, 96043030500, 96043032100*	1	-
17	594110601	DECAL *For 96041041900. (582 45 79-01) DECAL.*	1	-
17	596970801	DECAL *For 96043029000*	1	-
30	581579001	DECAL *For 96043024500, 96043029000*	1	-

Ref.	Article N.	Description	Qty	Kit
31	586742201	DECAL *For 96043024500, 96043029000*	1	-
32	581724801	DECAL -	1	-
33	581724802	DECAL *For 96043032100*	1	-
34	532439882	PAD -	1	-
35	532439881	PAD -	1	-
1	900000002	DUMMY PART *TRANSAXLE TUFFTORQ K66ELD (580402201)*	1	-
2	539912757	KEY -	1	-
3	532007563	WASHER -	1	-
7	586935402	HUB -	1	-
9	532140080	BOLT *For 96043024500, 96041041900, 96043029000*	1	-
9	596218701	BOLT *For 96043030500, 96043032100, 96043029000*	1	-
15	596565301	WASHER *For 96043029000, 96043032100*	1	-
15	819131316	WASHER -	1	-
17	532401072	SPRING -	1	-
26	532199679	SPRING -	1	-
29	532407245	ROD -	1	-
33	812000053	E-CLIP -	1	-
35	590605902	ROD *For 96043024500, 96043029000, 96043030500, 96043032100*	1	-
35	583864501	ROD *For 96041041900*	1	-
42	532008883	PEDAL -	1	-
49	596136201	BOLT *For 96043030500, 96043032100, 96043029000*	1	-
49	872110614	BOLT	1	-

Ref.	Article N.	Description	Qty	Kit
		For 96043024500, 96041041900, 96043029000		
50	532194327	PULLEY -	1	-
51	873900600	NUT -	1	-
52	532194326	PULLEY -	1	-
56	592855301	DRIVE BELT -	1	-
64	532197865	SHAFT -	1	-
69	583404901	PIN *For 96043024500*	1	-
69	532423303	HAIR PIN COTTER *For 96041041900, 96043029000, 96043030500, 96043032100*	1	-
70	532439661	CONSOLE -	1	-
73	595316601	BOLT *For 96043030500, 96043032100, 96043029000*	1	-
73	874490544	SCREW *For 96043024500, 96041041900, 96043029000*	1	-
74	596134101	SCREW *For 96043030500, 96043032100, 96043029000*	1	-
74	532142432	SCREW *For 96043024500, 96041041900, 96043029000*	1	-
80	589333402	STRAP -	1	-
92	595305701	SCREW -	1	-
99	582404701	ROD -	1	-
116	596135701	LOCK NUT -	1	-
125	817000512	SCREW -	1	-
153	532004497	CLIP -	1	-
159	596029501	PIN *For 96043030500, 96043032100, 96043029000*	1	-
159	876020412	SPLIT PIN *For 96043024500, 96041041900, 96043029000*	1	-
161	532105709	SPRING -	1	-

Ref.	Article N.	Description	Qty	Kit
163	532407246	ROD -	1	-
166	532429164	NUT -	1	-
167	532405257	LATCH -	1	-
170	532194322	KEEPER -	1	-
171	596136301	BOLT -	1	-
177	587225301	PIN *For 96043030500, 96043032100, 96043029000*	1	-
177	532169484	PIN *For 96043024500, 96041041900, 96043029000*	1	-
177	596029401	RETAINER *For 96043030500, 96043032100, 96043029000*	1	-
183	598873002	SPACER *For 96043032100*	1	-
183	587587401	SPACER -	1	-
184	587653701	HANDLE -	1	-
185	872110622	BOLT -	1	-
186	532194321	SPACER -	1	-
187	596135501	WASHER -	1	-
188	582217001	LINK -	1	-
189	532194317	PLATE -	1	-
190	532194318	BELT GUIDE -	1	-
196	817000616	SCREW -	1	-
197	585658601	CLUTCH *For 96043024500, 96041041900*	1	-
197	587402001	BRACKET *For 96043029000*	1	-
197	585658602	BOSS *For 96043030500, 96043032100, 96043029000*	1	-
205	532123800	WASHER	1	-

Ref.	Article N.	Description	Qty	Kit
		-		
206	532448596	BRACKET -	1	-
207	587031402	LATCH *For 96043030500, 96043032100, 96043029000*	1	-
207	587031401	LATCH *For 96043024500, 96041041900, 96043029000*	1	-
208	532197869	SUPPORT *For 96043024500, 96041041900, 96043029000*	1	-
208	596564101	GEAR *For 96043030500, 96043032100, 96043029000*	1	-
209	590527802	ROD *For 96043024500, 96043029000, 96043030500, 96043032100*	1	-
209	532199592	ROD *For 96041041900*	1	-
210	532197860	ARM *RH*	1	-
211	532120183	BEARING -	1	-
213	532403119	CONTROL -	1	-
214	532421263	PAD -	1	-
215	586606502	PEDAL -	1	-
220	532198908	LENS *RH*	1	-
221	532403187	SPRING -	1	-
222	879212010	WASHER -	1	-
225	532407311	KEEPER -	1	-
226	532407109	BRACKET -	1	-
282	874490548	BOLT -	1	-
366	580626201	BRACKET *For 96043024500, 96041041900*	1	-
366	580626202	BRACKET *For 96043029000, 96043030500, 96043032100*	1	-
366	592878002	BRACKET *For 96043029000, 96043032100*	1	-

Ref.	Article N.	Description	Qty	Kit
1	532163465	BATTERY -	1	-
2	874760412	BOLT -	1	-
8	587205101	TRAY -	1	-
16	532176138	MICRO SWITCH -	1	-
21	532400252	HARNESS *For 96043024500*	1	-
21	585436401	HARNESS *For 96041041900*	1	-
24	585555601	CABLE *For 96043024500*	1	-
24	590223801	PRIMARY CABLE *For 96041041900*	1	-
25	585555501	CABLE -	1	-
26	532175158	FUSE -	1	-
27	586668901	NUT -	1	-
28	532416588	CABLE *For 96043024500*	1	-
28	590223702	GROUND CABLE *For 96041041900*	1	-
29	532401545	SWITCH *For 96043024500*	1	-
29	587648401	SWITCH *For 96041041900*	1	-
30	532193350	IGNITION MODULE -	1	-
33	532411935	KEY *For 96041041900*	1	-
33	532411933	KEY *For 96043024500*	1	-
34	532110712	SWITCH -	1	-
40	501133101	HARNESS *For 96043024500*	1	-
40	590193201	WIRING ASSY *For 96041041900*	1	-
41	817720408	SCREW	1	-

Ref.	Article N.	Description	Qty	Kit
		-		
42	532131563	COVER -	1	-
43	582042801	SOLENOID -	1	-
45	590645901	GAUGE *For 96041041900*	1	-
45	587553903	GAUGE *For 96043024500*	1	-
46	594721501	GAUGE *For 96041041900*	1	-
46	587554003	GAUGE *For 96043024500*	1	-
50	582107601	SWITCH -	1	-
55	817060512	SCREW -	1	-
71	532194276	CABLE ASSY *For 96043024500*	1	-
71	590193302	WIRING ASSY *For 96041041900*	1	-
75	580366401	SWITCH *For 96041041900*	1	-
90	532435395	TERMINAL COVER -	1	-
99	817670412	SCREW -	1	-
100	819091416	WASHER -	1	-
102	532404454	CABLE -	1	-
105	532407568	SWITCH *For 96043024500*	1	-
144	590568001	CONTROL UNIT -	1	-
146	590193401	WIRING ASSY -	1	-
1	532163465	BATTERY -	1	-
2	874760412	BOLT -	1	-
8	532414126	TRAY *For 96043030500*	1	-

Ref.	Article N.	Description	Qty	Kit
8	587205101	TRAY *For 96043029000, 96043032100*	1	-
16	532176138	MICRO SWITCH -	1	-
21	585436401	HARNESS -	1	-
24	585555601	CABLE -	1	-
25	585555501	CABLE -	1	-
26	532175158	FUSE -	1	-
27	586668901	NUT *For 96043029000*	1	-
27	596133601	LOCK NUT *For 96043030500, 96043032100, 96043029000*	1	-
28	532416588	CABLE -	1	-
29	532192749	SWITCH -	1	-
30	532193350	IGNITION MODULE -	1	-
33	532411935	KEY -	1	-
34	532110712	SWITCH -	1	-
40	501133601	HARNESS -	1	-
41	817720408	SCREW -	1	-
42	532131563	COVER -	1	-
43	582042801	SOLENOID *For 96043029000*	1	-
43	582042802	SOLENOID *For 96043030500, 96043032100, 96043029000*	1	-
45	587553903	GAUGE *For 96043029000*	1	-
45	587553906	GAUGE *For 96043030500, 96043032100, 96043029000*	1	-
46	587554003	GAUGE *For 96043029000*	1	-
46	587554006	GAUGE	1	-

Ref.	Article N.	Description	Qty	Kit
		For 96043030500, 96043032100, 96043029000		
50	582107601	SWITCH -	1	-
50	582107602	SWITCH *for all models*	1	-
55	817060512	SCREW -	1	-
59	532400303	ELECTRICAL SYSTEM *For 96043029000*	1	-
59	596941001	RECEPTACLE *For 96043030500, 96043032100, 96043029000*	1	-
71	580513001	HARNESS -	1	-
75	580366401	SWITCH -	1	-
90	532435395	TERMINAL COVER -	1	-
99	817670412	SCREW -	1	-
100	596135301	WASHER *For 96043030500, 96043032100, 96043029000*	1	-
100	819091416	WASHER *For 96043029000*	1	-
102	532404454	CABLE -	1	-
103	532421747	HARNESS -	1	-
105	532407568	SWITCH -	1	-
1	900000002	DUMMY PART *Engine Kohler Model No. KT745-3093 (596957201) For 96043029000*	1	-
2	589818701	MUFFLER	1	-
9	501832602	KEEPER	1	-
9	596501502	KEEPER	1	-
11	587241401	CLUTCH	1	-
12	586899601	PULLEY	1	-
15	532438030	FUEL TANK ASSY *Fits 2.75 filler neck*	1	-
15	532438024	FUEL TANK ASSY *Fits 2.75 filler neck*	1	-
18	529989702	CAP *Fits 2.00 filler neck*	1	-

Ref.	Article N.	Description	Qty	Kit
18	529989703	CAP *Fits 2.00 filler neck*	1	-
18	585124801	FUEL CAP ASSY *Fits 2.75 filler neck*	1	-
20	532424341	THROTTLE CONTROL	1	-
21	532416358	SCREW	1	-
21	596321701	SCREW	1	-
28	532401135	LINE	1	-
29	532137180	SPARK ARRESTER	1	-
37	532123487	HOSE CLAMP	1	-
41	532126197	WASHER	1	-
42	596238901	WASHER	1	-
42	539990247	WASHER	1	-
45	586668901	NUT	1	-
45	596133601	LOCK NUT	1	-
62	532434017	SHIELD	1	-
69	532178151	GASKET	1	-
70	583955601	TUBE *LH*	1	-
71	583955701	TUBE *RH*	1	-
81	532148456	TUBE	1	-
82	532428287	PLUG	1	-
85	501606901	BOLT	1	-
86	532184362	NUT	1	-
90	817000616	SCREW	1	-
91	532187495	BUSHING	1	-
92	817120616	SCREW	1	-
102	817000512	SCREW	1	-
116	539132624	KNOB	1	-
117	532420828	VALVE FUEL RESERVE	1	-
1	588549002	DECK SHELL ASSY *For 96043024500, 96041041900*	1	-
1	592618801	SERVICE KIT *For 96043029000, 96043030500, 96043032100*	1	-
1	592618901	SERVICE KIT *For 96041041900, 96043029000, 96043030500, 96043032100*	1	-
6	590304303	COVER -	1	-
7	590304203	COVER	1	-

Ref.	Article N.	Description	Qty	Kit
		For 96043024500, 96041041900, 96043030500, 96043032100, 96043029000		
8	532193003	SCREW -	1	-
11	582760508	BLADE *For 96043029000, 96043032100*	1	-
11	582760502	BLADE *For 96043024500, 96041041900, 96043030500, 96043029000, 96043032100*	1	-
14	539131898	SPINDLE *Aluminium*	1	-
20	532197236	SPACER -	1	-
22	596564003	BOLT -	1	-
22	599972501	BOLT *For 96043030500*	1	-
23	588438301	SCREW -	1	-
24	532105304	HUB CAP -	1	-
25	587354701	SPRING -	1	-
26	532110452	NUT -	1	-
27	590632201	DEFLECTOR ASSY -	1	-
28	596240801	BOLT *For 96043030500, 96043032100, 96043029000*	1	-
28	539115574	EYE BOLT *For 96043024500, 96041041900, 96043029000*	1	-
29	532131491	SHAFT *For 96043024500, 96041041900, 96043029000*	1	-
29	595297001	ROD *For 96043030500, 96043032100, 96043029000*	1	-
31	532187690	WASHER -	1	-
32	532173435	PULLEY *For 96043024500, 96041041900, 96043029000*	1	-
32	532173436	PULLEY *For 96043030500, 96043032100*	1	-
33	596134801	HEXAGON NUT *For 96043030500, 96043032100, 96043029000*	1	-
33	532400234	NUT *For 96043024500, 96041041900, 96043029000*	1	-

Ref.	Article N.	Description	Qty	Kit
34	596322601	NUT *For 96043030500, 96043032100, 96043024500, 96043029000*	1	-
34	873680600	NUT *For 96041041900, 96043029000*	1	-
36	596039201	LOCK NUT *For 96043030500, 96043032100, 96043029000*	1	-
36	539990585	NUT *For 96043024500, 96041041900, 96043029000*	1	-
37	532170165	BOLT -	1	-
41	584953901	BOLT -	1	-
42	596952201	PLUG *For 96043024500, 96041041900, 96043030500, 96043029000, 96043032100*	1	-
43	582219602	ARM -	1	-
46	532137729	SCREW -	1	-
47	582236301	DRIVE BELT -	1	-
48	574196502	TUBE -	1	-
49	873900600	NUT -	1	-
51	574169601	ROLLER -	1	-
52	532197379	PULLEY -	1	-
53	872140864	BOLT *For 96043024500, 96041041900, 96043029000*	1	-
53	594944501	BOLT *For 96043030500, 96043032100, 96043029000*	1	-
54	521991101	NUT *For 96043024500, 96041041900, 96043029000, 96043032100*	1	-
54	521991102	NUT *For 96043030500, 96043029000, 96043032100*	1	-
61	596274401	ROD *For 96043030500, 96043032100, 96043029000*	1	-
61	532400337	TIGE ANTI-ROULIS *For 96043024500, 96041041900, 96043029000*	1	-
62	596133201	WASHER *For 96043030500, 96043032100, 96043029000*	1	-
62	596134901	WASHER	1	-

Ref.	Article N.	Description	Qty	Kit
		For 96043024500, 96041041900, 96043029000		
63	532194208	PIN -	1	-
66	590732501	BUMPER ASSY -	1	-
97	532178515	WASHER -	1	-
98	587358401	SPRING -	1	-
109	532416405	COUPLING -	1	-
116	596434404	BOLT -	1	-
117	589527301	WHEEL -	1	-
184	596135701	LOCK NUT *For 96043029000*	1	-
187	593824001	STUD *For 96043029000, 96043030500, 96043032100*	1	-
187	532195161	STUD -	1	-
189	532195185	ARM *For 96043024500*	1	-
189	587140502	ARM *For 96041041900, 96043029000, 96043030500, 96043032100*	1	-
190	532196539	BOLT -	1	-
192	532198468	BELT GUIDE -	1	-
196	872140620	BOLT *For 96043024500, 96041041900*	1	-
196	596337801	BOLT *For 96043030500, 96043029000, 96043032100*	1	-
196	539128101	BOLT *For 96043029000, 96043032100*	1	-
242	532415598	HOSE COUPLING -	1	-
2	532422027	SHAFT -	1	-
3	596270601	LEVER *For 96043030500, 96043032100, 96043029000*	1	-
3	532195230	LEVER *For 96043024500, 96041041900, 96043029000*	1	-

Ref.	Article N.	Description	Qty	Kit
7	580962301	GRIP -	1	-
10	532196314	SPRING -	1	-
41	532175994	NUT *For 96043024500, 96041041900, 96043029000*	1	-
41	589464902	NUT *For 96043030500, 96043032100, 96043029000*	1	-
87	532194209	SPRING -	1	-
88	532195301	SPRING *For 96043029000, 96043030500, 96043032100*	1	-
88	532195304	SPRING -	1	-
89	819191912	WASHER -	1	-
91	532403407	LINK *For 96043024500, 96041041900, 96043029000*	1	-
91	589464805	LINK ASSY *For 96043030500, 96043032100, 96043029000*	1	-
96	532195263	BUSHING *For 96043024500, 96041041900, 96043029000*	1	-
96	593842101	BUSHING *For 96043030500, 96043032100, 96043029000*	1	-
97	817000612	SCREW -	1	-
98	589318703	DECK ATTACHMENT -	1	-
114	873360700	NUT -	1	-
1	900000002	DUMMY PART	1	-
1	588556701	SEAT *For 96043024500*	1	-
1	590337301	SEAT *For 96043030500, 96043032100*	1	-
1	590337302	SEAT *For 96041041900, 96043029000*	1	-
2	590336602	BRACKET -	1	-
3	590777602	BRACKET -	1	-
6	521996501	NUT *For 96043024500, 96041041900, 96043029000*	1	-

Ref.	Article N.	Description	Qty	Kit
6	521996502	NUT *For 96043030500, 96043032100, 96043029000*	1	-
7	590812301	SPRING -	1	-
8	532171877	BOLT -	1	-
10	590481702	BRACKET -	1	-
19	590691501	KNOB -	1	-
21	596231101	BOLT -	1	-
37	594944401	NUT *For 96043029000, 96043030500, 96043032100*	1	-
37	539112899	NUT, 5/16-18, NYLOC -	1	-
42	532199371	WASHER -	1	-
47	590351101	WASHER -	1	-
1	532439740	STEERING WHEEL *For 96043024500, 96041041900, 96043029000*	1	-
1	597866101	SERVICE KIT *For 96043030500, 96043032100. Steering wheel and steering cap.*	1	-
2	532195968	SHAFT *FRONT*	1	-
4	532403089	SPINDLE SHAFT *LH*	1	-
5	532403090	SPINDLE SHAFT *RH*	1	-
6	532006266	WASHER -	1	-
7	532121748	WASHER -	1	-
8	812000029	RETAINER RING -	1	-
9	532121232	HUB CAP -	1	-
13	532121749	WASHER -	1	-
14	596238701	WASHER *For 96043030500, 96043032100, 96043029000*	1	-
14	539990118	WASHER	1	-

Ref.	Article N.	Description	Qty	Kit
		For 96043024500, 96041041900, 96043029000		
15	873540600	NUT -	1	-
16	587016002	SHAFT -	1	-
19	532194729	PLATE -	1	-
21	586840201	ADAPTER -	1	-
22	585029901	BEARING -	1	-
26	532439743	HUB CAP *For 96043024500, 96041041900, 96043029000*	1	-
26	594949101	CAP *For 96043030500, 96043032100*	1	-
27	596933401	WASHER *For 96043030500, 96043032100, 96043029000*	1	-
27	819211616	WASHER *For 96043024500, 96041041900, 96043029000*	1	-
28	817000612	SCREW *For 96041041900, 96043029000, 96043030500, 96043032100*	1	-
29	817000612	SCREW *For 96041041900, 96043029000, 96043030500, 96043032100*	1	-
35	532194732	PLATE -	1	-
45	587016401	WASHER -	1	-
50	873900600	NUT -	1	-
53	532188967	WASHER -	1	-
54	874760636	BOLT -	1	-
55	532414736	SPACER -	1	-
58	532194747	BOLT -	1	-
59	532194748	WASHER -	1	-
60	873971000	NUT -	1	-
61	588794402	LINK ASSY *For 96043024500, 96041041900, 96043029000. LH.*	1	-

Ref.	Article N.	Description	Qty	Kit
61	597070202	LINKAGE *For 96043030500, 96043032100, 96043029000. LH.*	1	-
62	588794502	LINK ASSY *For 96043024500, 96041041900, 96043029000. RH.*	1	-
62	597070302	LINKAGE *For 96043030500, 96043032100, 96043029000. RH.*	1	-
63	817000512	SCREW -	1	-
64	532199849	SPRING RETAINER -	1	-
65	532194734	BRACKET *FRONT*	1	-
66	871020748	BOLT -	1	-
67	532194737	BUSHING *FRONT*	1	-
68	873900700	NUT -	1	-
69	532199162	WASHER -	1	-
70	585338801	BRACKET -	1	-
75	587738906	KIT *Includes pinion and screw*	1	-
76	580683601	SCREW -	1	-
78	532057079	WASHER -	1	-
122	532444962	CAP -	1	-
1	532059192	CAP -	1	-
2	532065139	NIPPLE -	1	-
3	532181839	RIM ASSY *Front*	1	-
4	532008134	HOSE *Front (Service Item Only)*	1	-
5	532161024	TIRE *For 96043024500. FRONT (16 X 6.5-8).*	1	-
5	593145101	TIRE *For 96041041900, 96043029000, 96043030500, 96043032100. FRONT (16 X 6.5-8).*	1	-

Ref.	Article N.	Description	Qty	Kit
6	532000278	NIPPLE *Front Wheel Only*	1	-
7	532009040	BEARING *Front Wheel Only*	1	-
8	532175039	HUB CAP *Front Wheel Only*	1	-
9	532170453	TIRE *For 96043024500. REAR (23 X 10.5-12).*	1	-
9	593145201	TIRE *For 96041041900, 96043029000, 96043030500, 96043032100. REAR (23 X 10.5-12).*	1	-
10	532007154	HOSE *Rear (Service Item Only*	1	-
11	532144510	WHEEL *For 96043024500, 96041041900, 96043029000. Rear.*	1	-
11	593144801	TIRE *For 96043030500, 96043032100. Rear.*	1	-
12	501503101	CAP -	1	-
16	532144334	SEALING FOAM *For 96043030500*	1	-
1	900000002	DUMMY PART *ENGINE KAWA MODEL NO. FR730V-ES04 (445363)*	1	-
2	589818701	MUFFLER -	1	-
9	501832602	KEEPER -	1	-
9	596501502	KEEPER *For 96043030500, 96043032100*	1	-
11	587241401	CLUTCH -	1	-
12	532194343	PULLEY -	1	-
15	532422909	FUEL TANK *Fits 2.75 filler neck. For 96043030500*	1	-
15	598732401	FUEL TANK *Fits 2.75 filler neck. For 96043032100*	1	-
15	590599402	TANK *Fits 2.75 filler neck. For 96043024500, 96041041900*	1	-
18	597478501	FUEL CAP ASSY *Fits 2.75 filler neck. For 96043030500*	1	-
18	529989702	CAP *Fits 2.00 filler neck*	1	-

Ref.	Article N.	Description	Qty	Kit
18	529989703	CAP *Fits 2.00 filler neck*	1	-
18	585124801	FUEL CAP ASSY *Fits 2.75 filler neck. For 96043024500, 96041041900, 96043032100*	1	-
18	599502201	FUEL CAP ASSY *Fits 2.75 filler neck. For 96043030500*	1	-
20	532424341	THROTTLE CONTROL -	1	-
21	532416358	SCREW *For 96043024500, 96041041900*	1	-
21	596321701	SCREW *For 96043030500, 96043032100*	1	-
22	532189541	CHOKE CONTROL -	1	-
28	532401135	LINE *For 96043030500*	1	-
29	532137180	SPARK ARRESTER -	1	-
30	532401135	LINE *For 96043030500*	1	-
37	532123487	HOSE CLAMP *For 96043030500*	1	-
38	532123487	HOSE CLAMP *For 96043030500*	1	-
41	532126197	WASHER -	1	-
42	596238901	WASHER *For 96043030500, 96043032100*	1	-
42	539990247	WASHER *For 96043024500, 96041041900*	1	-
45	586668901	NUT *For 96043024500, 96041041900*	1	-
45	596133601	LOCK NUT *For 96043030500, 96043032100*	1	-
62	532434017	SHIELD -	1	-
69	532178151	GASKET -	1	-
70	583955601	TUBE *LH*	1	-
71	583955701	TUBE *RH*	1	-
81	532148456	TUBE	1	-

Ref.	Article N.	Description	Qty	Kit
		-		
85	501606901	BOLT -	1	-
86	532184362	NUT -	1	-
90	817000616	SCREW -	1	-
91	532187495	BUSHING -	1	-
92	817120616	SCREW -	1	-
102	817000512	SCREW -	1	-
109	532414114	FILTER *For 96043030500*	1	-
110	532414118	VALVE ASSY *For 96043030500*	1	-
112	532401135	LINE *For 96043030500*	1	-
113	532414127	VALVE *For 96043030500*	1	-
116	539132624	KNOB -	1	-
117	532420828	VALVE FUEL RESERVE *For 96043030500, 96043032100*	1	-
138	532420718	PURGE *For 96043030500*	1	-
138	596941501	TUBE *For 96043030500*	1	-
143	590044401	SENSOR *For 96043024500, 96041041900*	1	-

STEERING

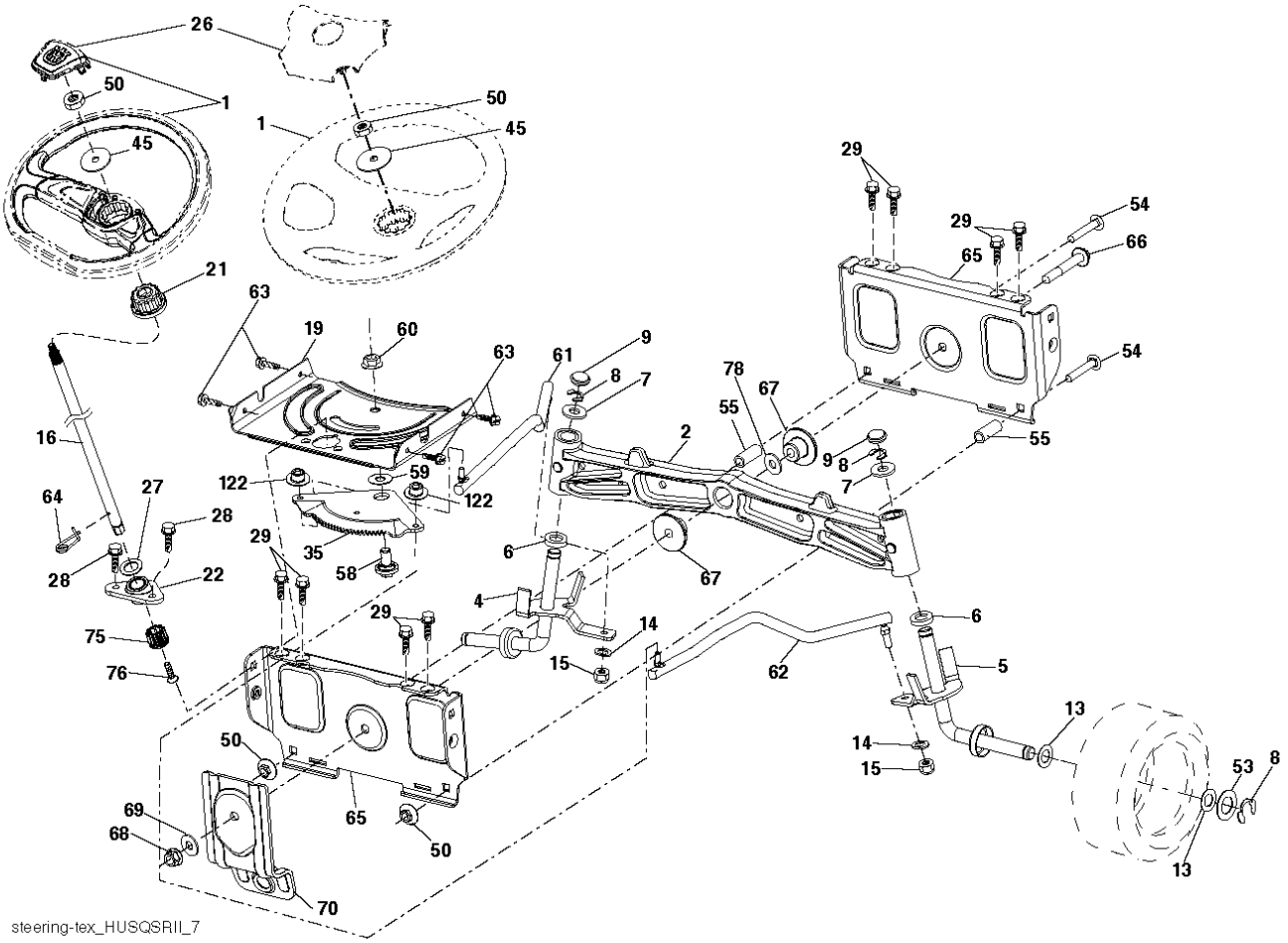

Ref.	Article N.	Description	Qty	Kit
2	580434401	DRAWBAR -	1	-
3	532444481	LOGOTYPE -	1	-
5	590748817	DASHBOARD *For 96043029000*	1	-
5	590748819	DASHBOARD *For 96041041900, 96043030500, 96043032100*	1	-
5	590748822	DASHBOARD *For 96043024500*	1	-
14	532441177	HOOD -	1	-
15	585420301	LENS *LH*	1	-
18	597247301	GRILLE *For 96043032100 and 96043030500*	1	-
18	587523401	GRILLE -	1	-
19	596133201	WASHER	1	-

Ref.	Article N.	Description	Qty	Kit
		For 96043030500, 96043032100, 96043029000		
19	596134901	WASHER *For 96043024500, 96041041900, 96043029000*	1	-
25	585420201	LENS *RH*	1	-
36	817060512	SCREW -	1	-
37	532441208	FENDER *For 96043024500, 96043030500, 96043032100*	1	-
37	590534702	FENDER *For 96041041900, 96043029000*	1	-
58	532194314	BRACKET -	1	-
68	596030701	SCREW *For 96043030500, 96043032100, 96043029000*	1	-
68	539990858	SCREW *For 96043024500, 96041041900, 96043029000*	1	-
105	532431882	GUARD -	1	-
125	581684801	CLIP -	1	-
130	532416358	SCREW *For 96043024500, 96041041900, 96043029000*	1	-
130	596321701	SCREW *For 96043030500, 96043032100, 96043029000*	1	-
137	532407590	BUMPER -	1	-
146	581857901	BOLT -	1	-
150	532439774	AIR DUCT -	1	-
151	532436670	BRACKET -	1	-
152	532439870	SHIELD -	1	-
159	817000612	SCREW -	1	-
161	532439929	CONSOLE *For 96043032100*	1	-
161	532401801	CONSOLE *For 96043024500, 96043029000, 96043030500*	1	-
162	596134101	SCREW *For 96043030500, 96043032100, 96043029000*	1	-

Ref.	Article N.	Description	Qty	Kit
162	532142432	SCREW *For 96043024500, 96041041900, 96043029000*	1	-
165	532194330	SUPPORT -	1	-
175	590607702	CROSS MEMBER -	1	-
176	532400776	SCREW -	1	-
177	532195228	BUSHING -	1	-
179	532168937	WASHER -	1	-
180	593346301	CHASSIS -	1	-
182	532406859	DASH -	1	-
183	595305701	SCREW *For 96043030500, 96043032100, 96043029000*	1	-
183	874520520	BOLT *For 96043024500, 96041041900, 96043029000*	1	-
189	817000512	SCREW -	1	-
191	586182801	REFLECTOR -	1	-
194	596135701	LOCK NUT *For 96043030500, 96043032100, 96043029000*	1	-
194	873900500	NUT *For 96043024500, 96041041900, 96043029000*	1	-
195	532404137	PLUG *For 96043024500, 96041041900*	1	-
196	532439674	CONSOLE *For 96043024500, 96041041900, 96043029000, 96043030500*	1	-
196	532439716	CONSOLE *For 96043032100*	1	-
199	532198259	PLATE -	1	-
202	532439728	COVER *RH*	1	-
203	532439727	COVER *LH*	1	-
204	587485801	VENT -	1	-
205	532439730	TRIM	1	-

Ref.	Article N.	Description	Qty	Kit
		RH		
206	532439729	TRIM *LH*	1	-
207	585420002	BEZEL *RH*	1	-
208	585420102	BEZEL *LH*	1	-
214	532199145	CLIP -	1	-
217	532409167	ROD -	1	-
221	532198909	LENS *LH*	1	-
228	593824001	STUD *For 96043029000, 96043032100*	1	-
228	532195161	STUD -	1	-
235	532406129	SPACER *For 96043024500, 96041041900, 96043029000*	1	-
235	596564201	SPACER *For 96043030500, 96043032100, 96043029000*	1	-
236	873930500	NUT -	1	-
281	817000616	SCREW -	1	-
296	585420501	LIGHT -	1	-
297	586182901	REFLECTOR -	1	-
299	585420401	LIGHT -	1	-
306	873900600	NUT -	1	-
335	532448204	COVER -	1	-
336	532445309	COVER -	1	-
350	532445143	CLIP -	1	-
351	532421734	PEN -	1	-
352	532448634	CLEVIS PIN -	1	-

Ref.	Article N.	Description	Qty	Kit
353	532178062	CLIP -	1	-
354	532448619	SUPPORT -	1	-
354	593196901	SUPPORT *For 96043029000, 96043030500, 96043029000, 96043032100*	1	-
355	532448636	BELLCRANK -	1	-
356	532448693	LINK -	1	-
357	532448684	COMPRESSION SPRING -	1	-
358	580366601	STUD *For 96043024500, 96041041900, 96043029000*	1	-
358	599128101	STUD *For 96043030500, 96043029000, 96043032100*	1	-
359	584393401	ACTUATOR -	1	-
360	532448618	BRACKET -	1	-
361	596564002	BOLT *For 96043030500, 96043032100, 96043029000*	1	-
361	817490610	SCREW *For 96043024500, 96041041900, 96043029000*	1	-
362	532448633	CLEVIS PIN -	1	-
365	532447368	SPACER -	1	-
375	586908201	BUMPER -	1	-
378	590849801	BUSHING -	1	-
379	593206902	PLATE -	1	-
1	581578901	DECAL *For 96043024500, 96043029000, 96043030500*	1	-
1	581579001	DECAL *For 96043024500, 96043029000*	1	-
1	586047302	DECAL *For 96041041900*	1	-
2	589357901	DECAL -	1	-
2	589357902	DECAL	1	-

Ref.	Article N.	Description	Qty	Kit
		For 96043032100		
3	592898301	DECAL *For 96043024500*	1	-
4	591164701	DECAL *For 96041041900, 96043029000, 96043030500, 96043032100*	1	-
5	587015101	DECAL *For 96043024500, 96043029000*	1	-
5	597470101	DECAL *For 96043030500, 96043032100*	1	-
6	596024201	DECAL *For 96043030500*	1	-
7	590885101	DECAL *For 96043024500*	1	-
7	593808801	DECAL *For 96041041900, 96043029000, 96043030500, 96043032100*	1	-
8	586978801	DECAL -	1	-
9	591164701	DECAL *For 96041041900, 96043029000, 96043030500, 96043032100*	1	-
10	501082601	DECAL *For 96041041900*	1	-
11	592898301	DECAL *For 96043024500*	1	-
14	591448701	DECAL -	1	-
15	532423829	DECAL *For 96043024500, 96041041900, 96043029000, 96043030500*	1	-
16	581627301	DECAL -	1	-
17	590937401	DECAL *For 96043024500, 96043030500, 96043032100*	1	-
17	594110601	DECAL *For 96041041900. (582 45 79-01) DECAL.*	1	-
17	596970801	DECAL *For 96043029000*	1	-
30	581579001	DECAL *For 96043024500, 96043029000*	1	-
31	586742201	DECAL *For 96043024500, 96043029000*	1	-
32	581724801	DECAL -	1	-
33	581724802	DECAL *For 96043032100*	1	-

Ref.	Article N.	Description	Qty	Kit
34	532439882	PAD -	1	-
35	532439881	PAD -	1	-
1	900000002	DUMMY PART *TRANSAXLE TUFFTORQ K66ELD (580402201)*	1	-
2	539912757	KEY -	1	-
3	532007563	WASHER -	1	-
7	586935402	HUB -	1	-
9	532140080	BOLT *For 96043024500, 96041041900, 96043029000*	1	-
9	596218701	BOLT *For 96043030500, 96043032100, 96043029000*	1	-
15	596565301	WASHER *For 96043029000, 96043032100*	1	-
15	819131316	WASHER -	1	-
17	532401072	SPRING -	1	-
26	532199679	SPRING -	1	-
29	532407245	ROD -	1	-
33	812000053	E-CLIP -	1	-
35	590605902	ROD *For 96043024500, 96043029000, 96043030500, 96043032100*	1	-
35	583864501	ROD *For 96041041900*	1	-
42	532008883	PEDAL -	1	-
49	596136201	BOLT *For 96043030500, 96043032100, 96043029000*	1	-
49	872110614	BOLT *For 96043024500, 96041041900, 96043029000*	1	-
50	532194327	PULLEY -	1	-
51	873900600	NUT -	1	-
52	532194326	PULLEY	1	-

Ref.	Article N.	Description	Qty	Kit
		-		
56	592855301	DRIVE BELT -	1	-
64	532197865	SHAFT -	1	-
69	583404901	PIN *For 96043024500*	1	-
69	532423303	HAIR PIN COTTER *For 96041041900, 96043029000, 96043030500, 96043032100*	1	-
70	532439661	CONSOLE -	1	-
73	595316601	BOLT *For 96043030500, 96043032100, 96043029000*	1	-
73	874490544	SCREW *For 96043024500, 96041041900, 96043029000*	1	-
74	596134101	SCREW *For 96043030500, 96043032100, 96043029000*	1	-
74	532142432	SCREW *For 96043024500, 96041041900, 96043029000*	1	-
80	589333402	STRAP -	1	-
92	595305701	SCREW -	1	-
99	582404701	ROD -	1	-
116	596135701	LOCK NUT -	1	-
125	817000512	SCREW -	1	-
153	532004497	CLIP -	1	-
159	596029501	PIN *For 96043030500, 96043032100, 96043029000*	1	-
159	876020412	SPLIT PIN *For 96043024500, 96041041900, 96043029000*	1	-
161	532105709	SPRING -	1	-
163	532407246	ROD -	1	-
166	532429164	NUT -	1	-
167	532405257	LATCH -	1	-

Ref.	Article N.	Description	Qty	Kit
170	532194322	KEEPER -	1	-
171	596136301	BOLT -	1	-
177	587225301	PIN *For 96043030500, 96043032100, 96043029000*	1	-
177	532169484	PIN *For 96043024500, 96041041900, 96043029000*	1	-
177	596029401	RETAINER *For 96043030500, 96043032100, 96043029000*	1	-
183	598873002	SPACER *For 96043032100*	1	-
183	587587401	SPACER -	1	-
184	587653701	HANDLE -	1	-
185	872110622	BOLT -	1	-
186	532194321	SPACER -	1	-
187	596135501	WASHER -	1	-
188	582217001	LINK -	1	-
189	532194317	PLATE -	1	-
190	532194318	BELT GUIDE -	1	-
196	817000616	SCREW -	1	-
197	585658601	CLUTCH *For 96043024500, 96041041900*	1	-
197	587402001	BRACKET *For 96043029000*	1	-
197	585658602	BOSS *For 96043030500, 96043032100, 96043029000*	1	-
205	532123800	WASHER -	1	-
206	532448596	BRACKET -	1	-
207	587031402	LATCH *For 96043030500, 96043032100, 96043029000*	1	-
207	587031401	LATCH	1	-

Ref.	Article N.	Description	Qty	Kit
		For 96043024500, 96041041900, 96043029000		
208	532197869	SUPPORT *For 96043024500, 96041041900, 96043029000*	1	-
208	596564101	GEAR *For 96043030500, 96043032100, 96043029000*	1	-
209	590527802	ROD *For 96043024500, 96043029000, 96043030500, 96043032100*	1	-
209	532199592	ROD *For 96041041900*	1	-
210	532197860	ARM *RH*	1	-
211	532120183	BEARING -	1	-
213	532403119	CONTROL -	1	-
214	532421263	PAD -	1	-
215	586606502	PEDAL -	1	-
220	532198908	LENS *RH*	1	-
221	532403187	SPRING -	1	-
222	879212010	WASHER -	1	-
225	532407311	KEEPER -	1	-
226	532407109	BRACKET -	1	-
282	874490548	BOLT -	1	-
366	580626201	BRACKET *For 96043024500, 96041041900*	1	-
366	580626202	BRACKET *For 96043029000, 96043030500, 96043032100*	1	-
366	592878002	BRACKET *For 96043029000, 96043032100*	1	-
1	532163465	BATTERY -	1	-
2	874760412	BOLT -	1	-
8	587205101	TRAY -	1	-

Ref.	Article N.	Description	Qty	Kit
16	532176138	MICRO SWITCH -	1	-
21	532400252	HARNESS *For 96043024500*	1	-
21	585436401	HARNESS *For 96041041900*	1	-
24	585555601	CABLE *For 96043024500*	1	-
24	590223801	PRIMARY CABLE *For 96041041900*	1	-
25	585555501	CABLE -	1	-
26	532175158	FUSE -	1	-
27	586668901	NUT -	1	-
28	532416588	CABLE *For 96043024500*	1	-
28	590223702	GROUND CABLE *For 96041041900*	1	-
29	532401545	SWITCH *For 96043024500*	1	-
29	587648401	SWITCH *For 96041041900*	1	-
30	532193350	IGNITION MODULE -	1	-
33	532411935	KEY *For 96041041900*	1	-
33	532411933	KEY *For 96043024500*	1	-
34	532110712	SWITCH -	1	-
40	501133101	HARNESS *For 96043024500*	1	-
40	590193201	WIRING ASSY *For 96041041900*	1	-
41	817720408	SCREW -	1	-
42	532131563	COVER -	1	-
43	582042801	SOLENOID -	1	-
45	590645901	GAUGE	1	-

Ref.	Article N.	Description	Qty	Kit
		For 96041041900		
45	587553903	GAUGE *For 96043024500*	1	-
46	594721501	GAUGE *For 96041041900*	1	-
46	587554003	GAUGE *For 96043024500*	1	-
50	582107601	SWITCH -	1	-
55	817060512	SCREW -	1	-
71	532194276	CABLE ASSY *For 96043024500*	1	-
71	590193302	WIRING ASSY *For 96041041900*	1	-
75	580366401	SWITCH *For 96041041900*	1	-
90	532435395	TERMINAL COVER -	1	-
99	817670412	SCREW -	1	-
100	819091416	WASHER -	1	-
102	532404454	CABLE -	1	-
105	532407568	SWITCH *For 96043024500*	1	-
144	590568001	CONTROL UNIT -	1	-
146	590193401	WIRING ASSY -	1	-
1	532163465	BATTERY -	1	-
2	874760412	BOLT -	1	-
8	532414126	TRAY *For 96043030500*	1	-
8	587205101	TRAY *For 96043029000, 96043032100*	1	-
16	532176138	MICRO SWITCH -	1	-
21	585436401	HARNESS -	1	-

Ref.	Article N.	Description	Qty	Kit
24	585555601	CABLE -	1	-
25	585555501	CABLE -	1	-
26	532175158	FUSE -	1	-
27	586668901	NUT *For 96043029000*	1	-
27	596133601	LOCK NUT *For 96043030500, 96043032100, 96043029000*	1	-
28	532416588	CABLE -	1	-
29	532192749	SWITCH -	1	-
30	532193350	IGNITION MODULE -	1	-
33	532411935	KEY -	1	-
34	532110712	SWITCH -	1	-
40	501133601	HARNESS -	1	-
41	817720408	SCREW -	1	-
42	532131563	COVER -	1	-
43	582042801	SOLENOID *For 96043029000*	1	-
43	582042802	SOLENOID *For 96043030500, 96043032100, 96043029000*	1	-
45	587553903	GAUGE *For 96043029000*	1	-
45	587553906	GAUGE *For 96043030500, 96043032100, 96043029000*	1	-
46	587554003	GAUGE *For 96043029000*	1	-
46	587554006	GAUGE *For 96043030500, 96043032100, 96043029000*	1	-
50	582107601	SWITCH -	1	-
50	582107602	SWITCH *for all models*	1	-
55	817060512	SCREW	1	-

Ref.	Article N.	Description	Qty	Kit
		-		
59	532400303	ELECTRICAL SYSTEM *For 96043029000*	1	-
59	596941001	RECEPTACLE *For 96043030500, 96043032100, 96043029000*	1	-
71	580513001	HARNESS -	1	-
75	580366401	SWITCH -	1	-
90	532435395	TERMINAL COVER -	1	-
99	817670412	SCREW -	1	-
100	596135301	WASHER *For 96043030500, 96043032100, 96043029000*	1	-
100	819091416	WASHER *For 96043029000*	1	-
102	532404454	CABLE -	1	-
103	532421747	HARNESS -	1	-
105	532407568	SWITCH -	1	-
1	900000002	DUMMY PART *Engine Kohler Model No. KT745-3093 (596957201) For 96043029000*	1	-
2	589818701	MUFFLER	1	-
9	501832602	KEEPER	1	-
9	596501502	KEEPER	1	-
11	587241401	CLUTCH	1	-
12	586899601	PULLEY	1	-
15	532438030	FUEL TANK ASSY *Fits 2.75 filler neck*	1	-
15	532438024	FUEL TANK ASSY *Fits 2.75 filler neck*	1	-
18	529989702	CAP *Fits 2.00 filler neck*	1	-
18	529989703	CAP *Fits 2.00 filler neck*	1	-
18	585124801	FUEL CAP ASSY *Fits 2.75 filler neck*	1	-
20	532424341	THROTTLE CONTROL	1	-
21	532416358	SCREW	1	-

Ref.	Article N.	Description	Qty	Kit
21	596321701	SCREW	1	-
28	532401135	LINE	1	-
29	532137180	SPARK ARRESTER	1	-
37	532123487	HOSE CLAMP	1	-
41	532126197	WASHER	1	-
42	596238901	WASHER	1	-
42	539990247	WASHER	1	-
45	586668901	NUT	1	-
45	596133601	LOCK NUT	1	-
62	532434017	SHIELD	1	-
69	532178151	GASKET	1	-
70	583955601	TUBE *LH*	1	-
71	583955701	TUBE *RH*	1	-
81	532148456	TUBE	1	-
82	532428287	PLUG	1	-
85	501606901	BOLT	1	-
86	532184362	NUT	1	-
90	817000616	SCREW	1	-
91	532187495	BUSHING	1	-
92	817120616	SCREW	1	-
102	817000512	SCREW	1	-
116	539132624	KNOB	1	-
117	532420828	VALVE FUEL RESERVE	1	-
1	588549002	DECK SHELL ASSY *For 96043024500, 96041041900*	1	-
1	592618801	SERVICE KIT *For 96043029000, 96043030500, 96043032100*	1	-
1	592618901	SERVICE KIT *For 96041041900, 96043029000, 96043030500, 96043032100*	1	-
6	590304303	COVER -	1	-
7	590304203	COVER *For 96043024500, 96041041900, 96043030500, 96043032100, 96043029000*	1	-
8	532193003	SCREW -	1	-
11	582760508	BLADE *For 96043029000, 96043032100*	1	-
11	582760502	BLADE *For 96043024500, 96041041900, 96043030500, 96043029000, 96043032100*	1	-

Ref.	Article N.	Description	Qty	Kit
14	539131898	SPINDLE *Aluminium*	1	-
20	532197236	SPACER -	1	-
22	596564003	BOLT -	1	-
22	599972501	BOLT *For 96043030500*	1	-
23	588438301	SCREW -	1	-
24	532105304	HUB CAP -	1	-
25	587354701	SPRING -	1	-
26	532110452	NUT -	1	-
27	590632201	DEFLECTOR ASSY -	1	-
28	596240801	BOLT *For 96043030500, 96043032100, 96043029000*	1	-
28	539115574	EYE BOLT *For 96043024500, 96041041900, 96043029000*	1	-
29	532131491	SHAFT *For 96043024500, 96041041900, 96043029000*	1	-
29	595297001	ROD *For 96043030500, 96043032100, 96043029000*	1	-
31	532187690	WASHER -	1	-
32	532173435	PULLEY *For 96043024500, 96041041900, 96043029000*	1	-
32	532173436	PULLEY *For 96043030500, 96043032100*	1	-
33	596134801	HEXAGON NUT *For 96043030500, 96043032100, 96043029000*	1	-
33	532400234	NUT *For 96043024500, 96041041900, 96043029000*	1	-
34	596322601	NUT *For 96043030500, 96043032100, 96043024500, 96043029000*	1	-
34	873680600	NUT *For 96041041900, 96043029000*	1	-
36	596039201	LOCK NUT *For 96043030500, 96043032100, 96043029000*	1	-
36	539990585	NUT	1	-

Ref.	Article N.	Description	Qty	Kit
		For 96043024500, 96041041900, 96043029000		
37	532170165	BOLT -	1	-
41	584953901	BOLT -	1	-
42	596952201	PLUG *For 96043024500, 96041041900, 96043030500, 96043029000, 96043032100*	1	-
43	582219602	ARM -	1	-
46	532137729	SCREW -	1	-
47	582236301	DRIVE BELT -	1	-
48	574196502	TUBE -	1	-
49	873900600	NUT -	1	-
51	574169601	ROLLER -	1	-
52	532197379	PULLEY -	1	-
53	872140864	BOLT *For 96043024500, 96041041900, 96043029000*	1	-
53	594944501	BOLT *For 96043030500, 96043032100, 96043029000*	1	-
54	521991101	NUT *For 96043024500, 96041041900, 96043029000, 96043032100*	1	-
54	521991102	NUT *For 96043030500, 96043029000, 96043032100*	1	-
61	596274401	ROD *For 96043030500, 96043032100, 96043029000*	1	-
61	532400337	TIGE ANTI-ROULIS *For 96043024500, 96041041900, 96043029000*	1	-
62	596133201	WASHER *For 96043030500, 96043032100, 96043029000*	1	-
62	596134901	WASHER *For 96043024500, 96041041900, 96043029000*	1	-
63	532194208	PIN -	1	-
66	590732501	BUMPER ASSY -	1	-
97	532178515	WASHER -	1	-

Ref.	Article N.	Description	Qty	Kit
98	587358401	SPRING -	1	-
109	532416405	COUPLING -	1	-
116	596434404	BOLT -	1	-
117	589527301	WHEEL -	1	-
184	596135701	LOCK NUT *For 96043029000*	1	-
187	593824001	STUD *For 96043029000, 96043030500, 96043032100*	1	-
187	532195161	STUD -	1	-
189	532195185	ARM *For 96043024500*	1	-
189	587140502	ARM *For 96041041900, 96043029000, 96043030500, 96043032100*	1	-
190	532196539	BOLT -	1	-
192	532198468	BELT GUIDE -	1	-
196	872140620	BOLT *For 96043024500, 96041041900*	1	-
196	596337801	BOLT *For 96043030500, 96043029000, 96043032100*	1	-
196	539128101	BOLT *For 96043029000, 96043032100*	1	-
242	532415598	HOSE COUPLING -	1	-
2	532422027	SHAFT -	1	-
3	596270601	LEVER *For 96043030500, 96043032100, 96043029000*	1	-
3	532195230	LEVER *For 96043024500, 96041041900, 96043029000*	1	-
7	580962301	GRIP -	1	-
10	532196314	SPRING -	1	-
41	532175994	NUT *For 96043024500, 96041041900, 96043029000*	1	-
41	589464902	NUT	1	-

Ref.	Article N.	Description	Qty	Kit
		For 96043030500, 96043032100, 96043029000		
87	532194209	SPRING -	1	-
88	532195301	SPRING *For 96043029000, 96043030500, 96043032100*	1	-
88	532195304	SPRING -	1	-
89	819191912	WASHER -	1	-
91	532403407	LINK *For 96043024500, 96041041900, 96043029000*	1	-
91	589464805	LINK ASSY *For 96043030500, 96043032100, 96043029000*	1	-
96	532195263	BUSHING *For 96043024500, 96041041900, 96043029000*	1	-
96	593842101	BUSHING *For 96043030500, 96043032100, 96043029000*	1	-
97	817000612	SCREW -	1	-
98	589318703	DECK ATTACHMENT -	1	-
114	873360700	NUT -	1	-
1	900000002	DUMMY PART	1	-
1	588556701	SEAT *For 96043024500*	1	-
1	590337301	SEAT *For 96043030500, 96043032100*	1	-
1	590337302	SEAT *For 96041041900, 96043029000*	1	-
2	590336602	BRACKET -	1	-
3	590777602	BRACKET -	1	-
6	521996501	NUT *For 96043024500, 96041041900, 96043029000*	1	-
6	521996502	NUT *For 96043030500, 96043032100, 96043029000*	1	-
7	590812301	SPRING -	1	-
8	532171877	BOLT -	1	-
10	590481702	BRACKET	1	-

Ref.	Article N.	Description	Qty	Kit
		-		
19	590691501	KNOB -	1	-
21	596231101	BOLT -	1	-
37	594944401	NUT *For 96043029000, 96043030500, 96043032100*	1	-
37	539112899	NUT, 5/16-18, NYLOC -	1	-
42	532199371	WASHER -	1	-
47	590351101	WASHER -	1	-
1	532439740	STEERING WHEEL *For 96043024500, 96041041900, 96043029000*	1	-
1	597866101	SERVICE KIT *For 96043030500, 96043032100. Steering wheel and steering cap.*	1	-
2	532195968	SHAFT *FRONT*	1	-
4	532403089	SPINDLE SHAFT *LH*	1	-
5	532403090	SPINDLE SHAFT *RH*	1	-
6	532006266	WASHER -	1	-
7	532121748	WASHER -	1	-
8	812000029	RETAINER RING -	1	-
9	532121232	HUB CAP -	1	-
13	532121749	WASHER -	1	-
14	596238701	WASHER *For 96043030500, 96043032100, 96043029000*	1	-
14	539990118	WASHER *For 96043024500, 96041041900, 96043029000*	1	-
15	873540600	NUT -	1	-
16	587016002	SHAFT -	1	-
19	532194729	PLATE -	1	-

Ref.	Article N.	Description	Qty	Kit
21	586840201	ADAPTER -	1	-
22	585029901	BEARING -	1	-
26	532439743	HUB CAP *For 96043024500, 96041041900, 96043029000*	1	-
26	594949101	CAP *For 96043030500, 96043032100*	1	-
27	596933401	WASHER *For 96043030500, 96043032100, 96043029000*	1	-
27	819211616	WASHER *For 96043024500, 96041041900, 96043029000*	1	-
28	817000612	SCREW *For 96041041900, 96043029000, 96043030500, 96043032100*	1	-
29	817000612	SCREW *For 96041041900, 96043029000, 96043030500, 96043032100*	1	-
35	532194732	PLATE -	1	-
45	587016401	WASHER -	1	-
50	873900600	NUT -	1	-
53	532188967	WASHER -	1	-
54	874760636	BOLT -	1	-
55	532414736	SPACER -	1	-
58	532194747	BOLT -	1	-
59	532194748	WASHER -	1	-
60	873971000	NUT -	1	-
61	588794402	LINK ASSY *For 96043024500, 96041041900, 96043029000. LH.*	1	-
61	597070202	LINKAGE *For 96043030500, 96043032100, 96043029000. LH.*	1	-
62	588794502	LINK ASSY *For 96043024500, 96041041900, 96043029000. RH.*	1	-
62	597070302	LINKAGE *For 96043030500, 96043032100, 96043029000. RH.*	1	-
63	817000512	SCREW	1	-

Ref.	Article N.	Description	Qty	Kit
		-		
64	532199849	SPRING RETAINER -	1	-
65	532194734	BRACKET *FRONT*	1	-
66	871020748	BOLT -	1	-
67	532194737	BUSHING *FRONT*	1	-
68	873900700	NUT -	1	-
69	532199162	WASHER -	1	-
70	585338801	BRACKET -	1	-
75	587738906	KIT *Includes pinion and screw*	1	-
76	580683601	SCREW -	1	-
78	532057079	WASHER -	1	-
122	532444962	CAP -	1	-
1	532059192	CAP -	1	-
2	532065139	NIPPLE -	1	-
3	532181839	RIM ASSY *Front*	1	-
4	532008134	HOSE *Front (Service Item Only)*	1	-
5	532161024	TIRE *For 96043024500. FRONT (16 X 6.5-8).*	1	-
5	593145101	TIRE *For 96041041900, 96043029000, 96043030500, 96043032100. FRONT (16 X 6.5-8).*	1	-
6	532000278	NIPPLE *Front Wheel Only*	1	-
7	532009040	BEARING *Front Wheel Only*	1	-
8	532175039	HUB CAP *Front Wheel Only*	1	-
9	532170453	TIRE	1	-

Ref.	Article N.	Description	Qty	Kit
		For 96043024500. REAR (23 X 10.5-12).		
9	593145201	TIRE *For 96041041900, 96043029000, 96043030500, 96043032100. REAR (23 X 10.5-12).*	1	-
10	532007154	HOSE *Rear (Service Item Only*	1	-
11	532144510	WHEEL *For 96043024500, 96041041900, 96043029000. Rear.*	1	-
11	593144801	TIRE *For 96043030500, 96043032100. Rear.*	1	-
12	501503101	CAP -	1	-
16	532144334	SEALING FOAM *For 96043030500*	1	-
1	900000002	DUMMY PART *ENGINE KAWA MODEL NO. FR730V-ES04 (445363)*	1	-
2	589818701	MUFFLER -	1	-
9	501832602	KEEPER -	1	-
9	596501502	KEEPER *For 96043030500, 96043032100*	1	-
11	587241401	CLUTCH -	1	-
12	532194343	PULLEY -	1	-
15	532422909	FUEL TANK *Fits 2.75 filler neck. For 96043030500*	1	-
15	598732401	FUEL TANK *Fits 2.75 filler neck. For 96043032100*	1	-
15	590599402	TANK *Fits 2.75 filler neck. For 96043024500, 96041041900*	1	-
18	597478501	FUEL CAP ASSY *Fits 2.75 filler neck. For 96043030500*	1	-
18	529989702	CAP *Fits 2.00 filler neck*	1	-
18	529989703	CAP *Fits 2.00 filler neck*	1	-
18	585124801	FUEL CAP ASSY *Fits 2.75 filler neck. For 96043024500, 96041041900, 96043032100*	1	-
18	599502201	FUEL CAP ASSY *Fits 2.75 filler neck. For 96043030500*	1	-
20	532424341	THROTTLE CONTROL	1	-

Ref.	Article N.	Description	Qty	Kit
		-		
21	532416358	SCREW *For 96043024500, 96041041900*	1	-
21	596321701	SCREW *For 96043030500, 96043032100*	1	-
22	532189541	CHOKE CONTROL -	1	-
28	532401135	LINE *For 96043030500*	1	-
29	532137180	SPARK ARRESTER -	1	-
30	532401135	LINE *For 96043030500*	1	-
37	532123487	HOSE CLAMP *For 96043030500*	1	-
38	532123487	HOSE CLAMP *For 96043030500*	1	-
41	532126197	WASHER -	1	-
42	596238901	WASHER *For 96043030500, 96043032100*	1	-
42	539990247	WASHER *For 96043024500, 96041041900*	1	-
45	586668901	NUT *For 96043024500, 96041041900*	1	-
45	596133601	LOCK NUT *For 96043030500, 96043032100*	1	-
62	532434017	SHIELD -	1	-
69	532178151	GASKET -	1	-
70	583955601	TUBE *LH*	1	-
71	583955701	TUBE *RH*	1	-
81	532148456	TUBE -	1	-
85	501606901	BOLT -	1	-
86	532184362	NUT -	1	-
90	817000616	SCREW -	1	-

Ref.	Article N.	Description	Qty	Kit
91	532187495	BUSHING -	1	-
92	817120616	SCREW -	1	-
102	817000512	SCREW -	1	-
109	532414114	FILTER *For 96043030500*	1	-
110	532414118	VALVE ASSY *For 96043030500*	1	-
112	532401135	LINE *For 96043030500*	1	-
113	532414127	VALVE *For 96043030500*	1	-
116	539132624	KNOB -	1	-
117	532420828	VALVE FUEL RESERVE *For 96043030500, 96043032100*	1	-
138	532420718	PURGE *For 96043030500*	1	-
138	596941501	TUBE *For 96043030500*	1	-
143	590044401	SENSOR *For 96043024500, 96041041900*	1	-

WHEELS AND TIRES

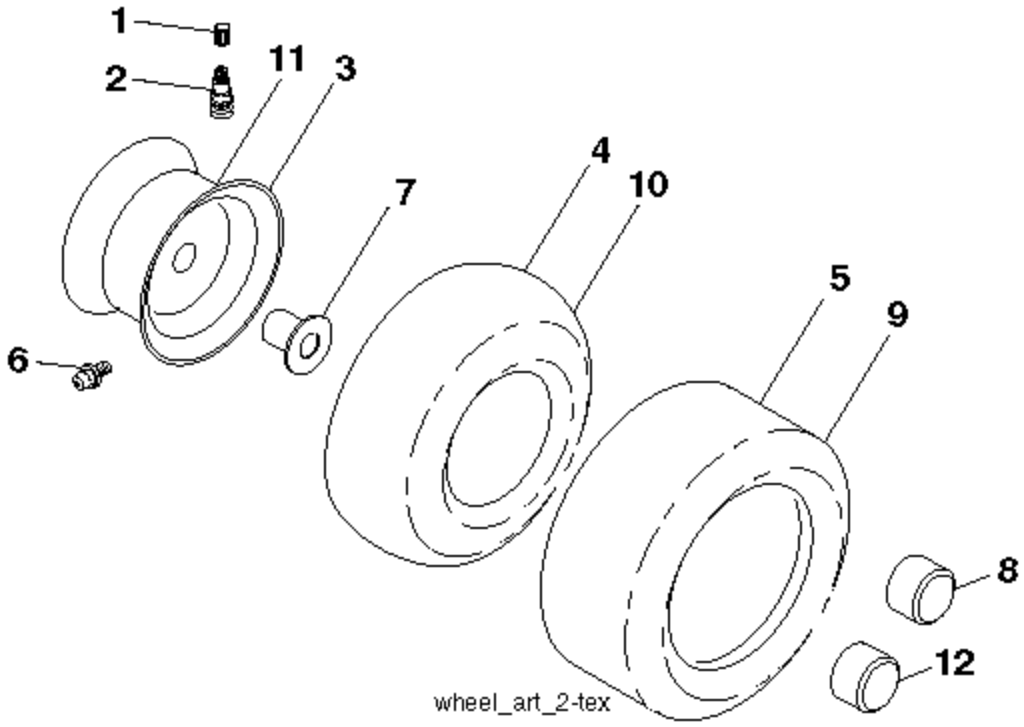

Ref.	Article N.	Description	Qty	Kit
2	580434401	DRAWBAR -	1	-
3	532444481	LOGOTYPE -	1	-
5	590748817	DASHBOARD *For 96043029000*	1	-
5	590748819	DASHBOARD *For 96041041900, 96043030500, 96043032100*	1	-
5	590748822	DASHBOARD *For 96043024500*	1	-
14	532441177	HOOD -	1	-
15	585420301	LENS *LH*	1	-
18	597247301	GRILLE *For 96043032100 and 96043030500*	1	-
18	587523401	GRILLE -	1	-
19	596133201	WASHER *For 96043030500, 96043032100, 96043029000*	1	-
19	596134901	WASHER *For 96043024500, 96041041900, 96043029000*	1	-

Ref.	Article N.	Description	Qty	Kit
25	585420201	LENS *RH*	1	-
36	817060512	SCREW -	1	-
37	532441208	FENDER *For 96043024500, 96043030500, 96043032100*	1	-
37	590534702	FENDER *For 96041041900, 96043029000*	1	-
58	532194314	BRACKET -	1	-
68	596030701	SCREW *For 96043030500, 96043032100, 96043029000*	1	-
68	539990858	SCREW *For 96043024500, 96041041900, 96043029000*	1	-
105	532431882	GUARD -	1	-
125	581684801	CLIP -	1	-
130	532416358	SCREW *For 96043024500, 96041041900, 96043029000*	1	-
130	596321701	SCREW *For 96043030500, 96043032100, 96043029000*	1	-
137	532407590	BUMPER -	1	-
146	581857901	BOLT -	1	-
150	532439774	AIR DUCT -	1	-
151	532436670	BRACKET -	1	-
152	532439870	SHIELD -	1	-
159	817000612	SCREW -	1	-
161	532439929	CONSOLE *For 96043032100*	1	-
161	532401801	CONSOLE *For 96043024500, 96043029000, 96043030500*	1	-
162	596134101	SCREW *For 96043030500, 96043032100, 96043029000*	1	-
162	532142432	SCREW *For 96043024500, 96041041900, 96043029000*	1	-
165	532194330	SUPPORT	1	-

Ref.	Article N.	Description	Qty	Kit
		-		
175	590607702	CROSS MEMBER -	1	-
176	532400776	SCREW -	1	-
177	532195228	BUSHING -	1	-
179	532168937	WASHER -	1	-
180	593346301	CHASSIS -	1	-
182	532406859	DASH -	1	-
183	595305701	SCREW *For 96043030500, 96043032100, 96043029000*	1	-
183	874520520	BOLT *For 96043024500, 96041041900, 96043029000*	1	-
189	817000512	SCREW -	1	-
191	586182801	REFLECTOR -	1	-
194	596135701	LOCK NUT *For 96043030500, 96043032100, 96043029000*	1	-
194	873900500	NUT *For 96043024500, 96041041900, 96043029000*	1	-
195	532404137	PLUG *For 96043024500, 96041041900*	1	-
196	532439674	CONSOLE *For 96043024500, 96041041900, 96043029000, 96043030500*	1	-
196	532439716	CONSOLE *For 96043032100*	1	-
199	532198259	PLATE -	1	-
202	532439728	COVER *RH*	1	-
203	532439727	COVER *LH*	1	-
204	587485801	VENT -	1	-
205	532439730	TRIM *RH*	1	-
206	532439729	TRIM *LH*	1	-

Ref.	Article N.	Description	Qty	Kit
207	585420002	BEZEL *RH*	1	-
208	585420102	BEZEL *LH*	1	-
214	532199145	CLIP -	1	-
217	532409167	ROD -	1	-
221	532198909	LENS *LH*	1	-
228	593824001	STUD *For 96043029000, 96043032100*	1	-
228	532195161	STUD -	1	-
235	532406129	SPACER *For 96043024500, 96041041900, 96043029000*	1	-
235	596564201	SPACER *For 96043030500, 96043032100, 96043029000*	1	-
236	873930500	NUT -	1	-
281	817000616	SCREW -	1	-
296	585420501	LIGHT -	1	-
297	586182901	REFLECTOR -	1	-
299	585420401	LIGHT -	1	-
306	873900600	NUT -	1	-
335	532448204	COVER -	1	-
336	532445309	COVER -	1	-
350	532445143	CLIP -	1	-
351	532421734	PEN -	1	-
352	532448634	CLEVIS PIN -	1	-
353	532178062	CLIP -	1	-
354	532448619	SUPPORT	1	-

Ref.	Article N.	Description	Qty	Kit
		-		
354	593196901	SUPPORT *For 96043029000, 96043030500, 96043029000, 96043032100*	1	-
355	532448636	BELLCRANK -	1	-
356	532448693	LINK -	1	-
357	532448684	COMPRESSION SPRING -	1	-
358	580366601	STUD *For 96043024500, 96041041900, 96043029000*	1	-
358	599128101	STUD *For 96043030500, 96043029000, 96043032100*	1	-
359	584393401	ACTUATOR -	1	-
360	532448618	BRACKET -	1	-
361	596564002	BOLT *For 96043030500, 96043032100, 96043029000*	1	-
361	817490610	SCREW *For 96043024500, 96041041900, 96043029000*	1	-
362	532448633	CLEVIS PIN -	1	-
365	532447368	SPACER -	1	-
375	586908201	BUMPER -	1	-
378	590849801	BUSHING -	1	-
379	593206902	PLATE -	1	-
1	581578901	DECAL *For 96043024500, 96043029000, 96043030500*	1	-
1	581579001	DECAL *For 96043024500, 96043029000*	1	-
1	586047302	DECAL *For 96041041900*	1	-
2	589357901	DECAL -	1	-
2	589357902	DECAL *For 96043032100*	1	-
3	592898301	DECAL *For 96043024500*	1	-

Ref.	Article N.	Description	Qty	Kit
4	591164701	DECAL *For 96041041900, 96043029000, 96043030500, 96043032100*	1	-
5	587015101	DECAL *For 96043024500, 96043029000*	1	-
5	597470101	DECAL *For 96043030500, 96043032100*	1	-
6	596024201	DECAL *For 96043030500*	1	-
7	590885101	DECAL *For 96043024500*	1	-
7	593808801	DECAL *For 96041041900, 96043029000, 96043030500, 96043032100*	1	-
8	586978801	DECAL -	1	-
9	591164701	DECAL *For 96041041900, 96043029000, 96043030500, 96043032100*	1	-
10	501082601	DECAL *For 96041041900*	1	-
11	592898301	DECAL *For 96043024500*	1	-
14	591448701	DECAL -	1	-
15	532423829	DECAL *For 96043024500, 96041041900, 96043029000, 96043030500*	1	-
16	581627301	DECAL -	1	-
17	590937401	DECAL *For 96043024500, 96043030500, 96043032100*	1	-
17	594110601	DECAL *For 96041041900. (582 45 79-01) DECAL.*	1	-
17	596970801	DECAL *For 96043029000*	1	-
30	581579001	DECAL *For 96043024500, 96043029000*	1	-
31	586742201	DECAL *For 96043024500, 96043029000*	1	-
32	581724801	DECAL -	1	-
33	581724802	DECAL *For 96043032100*	1	-
34	532439882	PAD -	1	-
35	532439881	PAD	1	-

Ref.	Article N.	Description	Qty	Kit
		-		
1	900000002	DUMMY PART *TRANSAXLE TUFFTORQ K66ELD (580402201)*	1	-
2	539912757	KEY -	1	-
3	532007563	WASHER -	1	-
7	586935402	HUB -	1	-
9	532140080	BOLT *For 96043024500, 96041041900, 96043029000*	1	-
9	596218701	BOLT *For 96043030500, 96043032100, 96043029000*	1	-
15	596565301	WASHER *For 96043029000, 96043032100*	1	-
15	819131316	WASHER -	1	-
17	532401072	SPRING -	1	-
26	532199679	SPRING -	1	-
29	532407245	ROD -	1	-
33	812000053	E-CLIP -	1	-
35	590605902	ROD *For 96043024500, 96043029000, 96043030500, 96043032100*	1	-
35	583864501	ROD *For 96041041900*	1	-
42	532008883	PEDAL -	1	-
49	596136201	BOLT *For 96043030500, 96043032100, 96043029000*	1	-
49	872110614	BOLT *For 96043024500, 96041041900, 96043029000*	1	-
50	532194327	PULLEY -	1	-
51	873900600	NUT -	1	-
52	532194326	PULLEY -	1	-
56	592855301	DRIVE BELT -	1	-

Ref.	Article N.	Description	Qty	Kit
64	532197865	SHAFT -	1	-
69	583404901	PIN *For 96043024500*	1	-
69	532423303	HAIR PIN COTTER *For 96041041900, 96043029000, 96043030500, 96043032100*	1	-
70	532439661	CONSOLE -	1	-
73	595316601	BOLT *For 96043030500, 96043032100, 96043029000*	1	-
73	874490544	SCREW *For 96043024500, 96041041900, 96043029000*	1	-
74	596134101	SCREW *For 96043030500, 96043032100, 96043029000*	1	-
74	532142432	SCREW *For 96043024500, 96041041900, 96043029000*	1	-
80	589333402	STRAP -	1	-
92	595305701	SCREW -	1	-
99	582404701	ROD -	1	-
116	596135701	LOCK NUT -	1	-
125	817000512	SCREW -	1	-
153	532004497	CLIP -	1	-
159	596029501	PIN *For 96043030500, 96043032100, 96043029000*	1	-
159	876020412	SPLIT PIN *For 96043024500, 96041041900, 96043029000*	1	-
161	532105709	SPRING -	1	-
163	532407246	ROD -	1	-
166	532429164	NUT -	1	-
167	532405257	LATCH -	1	-
170	532194322	KEEPER -	1	-
171	596136301	BOLT	1	-

Ref.	Article N.	Description	Qty	Kit
		-		
177	587225301	PIN *For 96043030500, 96043032100, 96043029000*	1	-
177	532169484	PIN *For 96043024500, 96041041900, 96043029000*	1	-
177	596029401	RETAINER *For 96043030500, 96043032100, 96043029000*	1	-
183	598873002	SPACER *For 96043032100*	1	-
183	587587401	SPACER -	1	-
184	587653701	HANDLE -	1	-
185	872110622	BOLT -	1	-
186	532194321	SPACER -	1	-
187	596135501	WASHER -	1	-
188	582217001	LINK -	1	-
189	532194317	PLATE -	1	-
190	532194318	BELT GUIDE -	1	-
196	817000616	SCREW -	1	-
197	585658601	CLUTCH *For 96043024500, 96041041900*	1	-
197	587402001	BRACKET *For 96043029000*	1	-
197	585658602	BOSS *For 96043030500, 96043032100, 96043029000*	1	-
205	532123800	WASHER -	1	-
206	532448596	BRACKET -	1	-
207	587031402	LATCH *For 96043030500, 96043032100, 96043029000*	1	-
207	587031401	LATCH *For 96043024500, 96041041900, 96043029000*	1	-
208	532197869	SUPPORT *For 96043024500, 96041041900, 96043029000*	1	-

Ref.	Article N.	Description	Qty	Kit
208	596564101	GEAR *For 96043030500, 96043032100, 96043029000*	1	-
209	590527802	ROD *For 96043024500, 96043029000, 96043030500, 96043032100*	1	-
209	532199592	ROD *For 96041041900*	1	-
210	532197860	ARM *RH*	1	-
211	532120183	BEARING -	1	-
213	532403119	CONTROL -	1	-
214	532421263	PAD -	1	-
215	586606502	PEDAL -	1	-
220	532198908	LENS *RH*	1	-
221	532403187	SPRING -	1	-
222	879212010	WASHER -	1	-
225	532407311	KEEPER -	1	-
226	532407109	BRACKET -	1	-
282	874490548	BOLT -	1	-
366	580626201	BRACKET *For 96043024500, 96041041900*	1	-
366	580626202	BRACKET *For 96043029000, 96043030500, 96043032100*	1	-
366	592878002	BRACKET *For 96043029000, 96043032100*	1	-
1	532163465	BATTERY -	1	-
2	874760412	BOLT -	1	-
8	587205101	TRAY -	1	-
16	532176138	MICRO SWITCH -	1	-
21	532400252	HARNESS	1	-

Ref.	Article N.	Description	Qty	Kit
		For 96043024500		
21	585436401	HARNESS *For 96041041900*	1	-
24	585555601	CABLE *For 96043024500*	1	-
24	590223801	PRIMARY CABLE *For 96041041900*	1	-
25	585555501	CABLE -	1	-
26	532175158	FUSE -	1	-
27	586668901	NUT -	1	-
28	532416588	CABLE *For 96043024500*	1	-
28	590223702	GROUND CABLE *For 96041041900*	1	-
29	532401545	SWITCH *For 96043024500*	1	-
29	587648401	SWITCH *For 96041041900*	1	-
30	532193350	IGNITION MODULE -	1	-
33	532411935	KEY *For 96041041900*	1	-
33	532411933	KEY *For 96043024500*	1	-
34	532110712	SWITCH -	1	-
40	501133101	HARNESS *For 96043024500*	1	-
40	590193201	WIRING ASSY *For 96041041900*	1	-
41	817720408	SCREW -	1	-
42	532131563	COVER -	1	-
43	582042801	SOLENOID -	1	-
45	590645901	GAUGE *For 96041041900*	1	-
45	587553903	GAUGE *For 96043024500*	1	-

Ref.	Article N.	Description	Qty	Kit
46	594721501	GAUGE *For 96041041900*	1	-
46	587554003	GAUGE *For 96043024500*	1	-
50	582107601	SWITCH -	1	-
55	817060512	SCREW -	1	-
71	532194276	CABLE ASSY *For 96043024500*	1	-
71	590193302	WIRING ASSY *For 96041041900*	1	-
75	580366401	SWITCH *For 96041041900*	1	-
90	532435395	TERMINAL COVER -	1	-
99	817670412	SCREW -	1	-
100	819091416	WASHER -	1	-
102	532404454	CABLE -	1	-
105	532407568	SWITCH *For 96043024500*	1	-
144	590568001	CONTROL UNIT -	1	-
146	590193401	WIRING ASSY -	1	-
1	532163465	BATTERY -	1	-
2	874760412	BOLT -	1	-
8	532414126	TRAY *For 96043030500*	1	-
8	587205101	TRAY *For 96043029000, 96043032100*	1	-
16	532176138	MICRO SWITCH -	1	-
21	585436401	HARNESS -	1	-
24	585555601	CABLE -	1	-
25	585555501	CABLE	1	-

Ref.	Article N.	Description	Qty	Kit
		-		
26	532175158	FUSE -	1	-
27	586668901	NUT *For 96043029000*	1	-
27	596133601	LOCK NUT *For 96043030500, 96043032100, 96043029000*	1	-
28	532416588	CABLE -	1	-
29	532192749	SWITCH -	1	-
30	532193350	IGNITION MODULE -	1	-
33	532411935	KEY -	1	-
34	532110712	SWITCH -	1	-
40	501133601	HARNESS -	1	-
41	817720408	SCREW -	1	-
42	532131563	COVER -	1	-
43	582042801	SOLENOID *For 96043029000*	1	-
43	582042802	SOLENOID *For 96043030500, 96043032100, 96043029000*	1	-
45	587553903	GAUGE *For 96043029000*	1	-
45	587553906	GAUGE *For 96043030500, 96043032100, 96043029000*	1	-
46	587554003	GAUGE *For 96043029000*	1	-
46	587554006	GAUGE *For 96043030500, 96043032100, 96043029000*	1	-
50	582107601	SWITCH -	1	-
50	582107602	SWITCH *for all models*	1	-
55	817060512	SCREW -	1	-
59	532400303	ELECTRICAL SYSTEM *For 96043029000*	1	-

Ref.	Article N.	Description	Qty	Kit
59	596941001	RECEPTACLE *For 96043030500, 96043032100, 96043029000*	1	-
71	580513001	HARNESS -	1	-
75	580366401	SWITCH -	1	-
90	532435395	TERMINAL COVER -	1	-
99	817670412	SCREW -	1	-
100	596135301	WASHER *For 96043030500, 96043032100, 96043029000*	1	-
100	819091416	WASHER *For 96043029000*	1	-
102	532404454	CABLE -	1	-
103	532421747	HARNESS -	1	-
105	532407568	SWITCH -	1	-
1	900000002	DUMMY PART *Engine Kohler Model No. KT745-3093 (596957201) For 96043029000*	1	-
2	589818701	MUFFLER	1	-
9	501832602	KEEPER	1	-
9	596501502	KEEPER	1	-
11	587241401	CLUTCH	1	-
12	586899601	PULLEY	1	-
15	532438030	FUEL TANK ASSY *Fits 2.75 filler neck*	1	-
15	532438024	FUEL TANK ASSY *Fits 2.75 filler neck*	1	-
18	529989702	CAP *Fits 2.00 filler neck*	1	-
18	529989703	CAP *Fits 2.00 filler neck*	1	-
18	585124801	FUEL CAP ASSY *Fits 2.75 filler neck*	1	-
20	532424341	THROTTLE CONTROL	1	-
21	532416358	SCREW	1	-
21	596321701	SCREW	1	-
28	532401135	LINE	1	-
29	532137180	SPARK ARRESTER	1	-

Ref.	Article N.	Description	Qty	Kit
37	532123487	HOSE CLAMP	1	-
41	532126197	WASHER	1	-
42	596238901	WASHER	1	-
42	539990247	WASHER	1	-
45	586668901	NUT	1	-
45	596133601	LOCK NUT	1	-
62	532434017	SHIELD	1	-
69	532178151	GASKET	1	-
70	583955601	TUBE *LH*	1	-
71	583955701	TUBE *RH*	1	-
81	532148456	TUBE	1	-
82	532428287	PLUG	1	-
85	501606901	BOLT	1	-
86	532184362	NUT	1	-
90	817000616	SCREW	1	-
91	532187495	BUSHING	1	-
92	817120616	SCREW	1	-
102	817000512	SCREW	1	-
116	539132624	KNOB	1	-
117	532420828	VALVE FUEL RESERVE	1	-
1	588549002	DECK SHELL ASSY *For 96043024500, 96041041900*	1	-
1	592618801	SERVICE KIT *For 96043029000, 96043030500, 96043032100*	1	-
1	592618901	SERVICE KIT *For 96041041900, 96043029000, 96043030500, 96043032100*	1	-
6	590304303	COVER -	1	-
7	590304203	COVER *For 96043024500, 96041041900, 96043030500, 96043032100, 96043029000*	1	-
8	532193003	SCREW -	1	-
11	582760508	BLADE *For 96043029000, 96043032100*	1	-
11	582760502	BLADE *For 96043024500, 96041041900, 96043030500, 96043029000, 96043032100*	1	-
14	539131898	SPINDLE *Aluminium*	1	-
20	532197236	SPACER	1	-

Ref.	Article N.	Description	Qty	Kit
		-		
22	596564003	BOLT -	1	-
22	599972501	BOLT *For 96043030500*	1	-
23	588438301	SCREW -	1	-
24	532105304	HUB CAP -	1	-
25	587354701	SPRING -	1	-
26	532110452	NUT -	1	-
27	590632201	DEFLECTOR ASSY -	1	-
28	596240801	BOLT *For 96043030500, 96043032100, 96043029000*	1	-
28	539115574	EYE BOLT *For 96043024500, 96041041900, 96043029000*	1	-
29	532131491	SHAFT *For 96043024500, 96041041900, 96043029000*	1	-
29	595297001	ROD *For 96043030500, 96043032100, 96043029000*	1	-
31	532187690	WASHER -	1	-
32	532173435	PULLEY *For 96043024500, 96041041900, 96043029000*	1	-
32	532173436	PULLEY *For 96043030500, 96043032100*	1	-
33	596134801	HEXAGON NUT *For 96043030500, 96043032100, 96043029000*	1	-
33	532400234	NUT *For 96043024500, 96041041900, 96043029000*	1	-
34	596322601	NUT *For 96043030500, 96043032100, 96043024500, 96043029000*	1	-
34	873680600	NUT *For 96041041900, 96043029000*	1	-
36	596039201	LOCK NUT *For 96043030500, 96043032100, 96043029000*	1	-
36	539990585	NUT *For 96043024500, 96041041900, 96043029000*	1	-
37	532170165	BOLT -	1	-

Ref.	Article N.	Description	Qty	Kit
41	584953901	BOLT -	1	-
42	596952201	PLUG *For 96043024500, 96041041900, 96043030500, 96043029000, 96043032100*	1	-
43	582219602	ARM -	1	-
46	532137729	SCREW -	1	-
47	582236301	DRIVE BELT -	1	-
48	574196502	TUBE -	1	-
49	873900600	NUT -	1	-
51	574169601	ROLLER -	1	-
52	532197379	PULLEY -	1	-
53	872140864	BOLT *For 96043024500, 96041041900, 96043029000*	1	-
53	594944501	BOLT *For 96043030500, 96043032100, 96043029000*	1	-
54	521991101	NUT *For 96043024500, 96041041900, 96043029000, 96043032100*	1	-
54	521991102	NUT *For 96043030500, 96043029000, 96043032100*	1	-
61	596274401	ROD *For 96043030500, 96043032100, 96043029000*	1	-
61	532400337	TIGE ANTI-ROULIS *For 96043024500, 96041041900, 96043029000*	1	-
62	596133201	WASHER *For 96043030500, 96043032100, 96043029000*	1	-
62	596134901	WASHER *For 96043024500, 96041041900, 96043029000*	1	-
63	532194208	PIN -	1	-
66	590732501	BUMPER ASSY -	1	-
97	532178515	WASHER -	1	-
98	587358401	SPRING -	1	-
109	532416405	COUPLING	1	-

Ref.	Article N.	Description	Qty	Kit
		-		
116	596434404	BOLT -	1	-
117	589527301	WHEEL -	1	-
184	596135701	LOCK NUT *For 96043029000*	1	-
187	593824001	STUD *For 96043029000, 96043030500, 96043032100*	1	-
187	532195161	STUD -	1	-
189	532195185	ARM *For 96043024500*	1	-
189	587140502	ARM *For 96041041900, 96043029000, 96043030500, 96043032100*	1	-
190	532196539	BOLT -	1	-
192	532198468	BELT GUIDE -	1	-
196	872140620	BOLT *For 96043024500, 96041041900*	1	-
196	596337801	BOLT *For 96043030500, 96043029000, 96043032100*	1	-
196	539128101	BOLT *For 96043029000, 96043032100*	1	-
242	532415598	HOSE COUPLING -	1	-
2	532422027	SHAFT -	1	-
3	596270601	LEVER *For 96043030500, 96043032100, 96043029000*	1	-
3	532195230	LEVER *For 96043024500, 96041041900, 96043029000*	1	-
7	580962301	GRIP -	1	-
10	532196314	SPRING -	1	-
41	532175994	NUT *For 96043024500, 96041041900, 96043029000*	1	-
41	589464902	NUT *For 96043030500, 96043032100, 96043029000*	1	-
87	532194209	SPRING -	1	-

Ref.	Article N.	Description	Qty	Kit
88	532195301	SPRING *For 96043029000, 96043030500, 96043032100*	1	-
88	532195304	SPRING -	1	-
89	819191912	WASHER -	1	-
91	532403407	LINK *For 96043024500, 96041041900, 96043029000*	1	-
91	589464805	LINK ASSY *For 96043030500, 96043032100, 96043029000*	1	-
96	532195263	BUSHING *For 96043024500, 96041041900, 96043029000*	1	-
96	593842101	BUSHING *For 96043030500, 96043032100, 96043029000*	1	-
97	817000612	SCREW -	1	-
98	589318703	DECK ATTACHMENT -	1	-
114	873360700	NUT -	1	-
1	900000002	DUMMY PART	1	-
1	588556701	SEAT *For 96043024500*	1	-
1	590337301	SEAT *For 96043030500, 96043032100*	1	-
1	590337302	SEAT *For 96041041900, 96043029000*	1	-
2	590336602	BRACKET -	1	-
3	590777602	BRACKET -	1	-
6	521996501	NUT *For 96043024500, 96041041900, 96043029000*	1	-
6	521996502	NUT *For 96043030500, 96043032100, 96043029000*	1	-
7	590812301	SPRING -	1	-
8	532171877	BOLT -	1	-
10	590481702	BRACKET -	1	-
19	590691501	KNOB -	1	-

Ref.	Article N.	Description	Qty	Kit
21	596231101	BOLT -	1	-
37	594944401	NUT *For 96043029000, 96043030500, 96043032100*	1	-
37	539112899	NUT, 5/16-18, NYLOC -	1	-
42	532199371	WASHER -	1	-
47	590351101	WASHER -	1	-
1	532439740	STEERING WHEEL *For 96043024500, 96041041900, 96043029000*	1	-
1	597866101	SERVICE KIT *For 96043030500, 96043032100. Steering wheel and steering cap.*	1	-
2	532195968	SHAFT *FRONT*	1	-
4	532403089	SPINDLE SHAFT *LH*	1	-
5	532403090	SPINDLE SHAFT *RH*	1	-
6	532006266	WASHER -	1	-
7	532121748	WASHER -	1	-
8	812000029	RETAINER RING -	1	-
9	532121232	HUB CAP -	1	-
13	532121749	WASHER -	1	-
14	596238701	WASHER *For 96043030500, 96043032100, 96043029000*	1	-
14	539990118	WASHER *For 96043024500, 96041041900, 96043029000*	1	-
15	873540600	NUT -	1	-
16	587016002	SHAFT -	1	-
19	532194729	PLATE -	1	-
21	586840201	ADAPTER -	1	-
22	585029901	BEARING	1	-

Ref.	Article N.	Description	Qty	Kit
		-		
26	532439743	HUB CAP *For 96043024500, 96041041900, 96043029000*	1	-
26	594949101	CAP *For 96043030500, 96043032100*	1	-
27	596933401	WASHER *For 96043030500, 96043032100, 96043029000*	1	-
27	819211616	WASHER *For 96043024500, 96041041900, 96043029000*	1	-
28	817000612	SCREW *For 96041041900, 96043029000, 96043030500, 96043032100*	1	-
29	817000612	SCREW *For 96041041900, 96043029000, 96043030500, 96043032100*	1	-
35	532194732	PLATE -	1	-
45	587016401	WASHER -	1	-
50	873900600	NUT -	1	-
53	532188967	WASHER -	1	-
54	874760636	BOLT -	1	-
55	532414736	SPACER -	1	-
58	532194747	BOLT -	1	-
59	532194748	WASHER -	1	-
60	873971000	NUT -	1	-
61	588794402	LINK ASSY *For 96043024500, 96041041900, 96043029000. LH.*	1	-
61	597070202	LINKAGE *For 96043030500, 96043032100, 96043029000. LH.*	1	-
62	588794502	LINK ASSY *For 96043024500, 96041041900, 96043029000. RH.*	1	-
62	597070302	LINKAGE *For 96043030500, 96043032100, 96043029000. RH.*	1	-
63	817000512	SCREW -	1	-
64	532199849	SPRING RETAINER -	1	-

Ref.	Article N.	Description	Qty	Kit
65	532194734	BRACKET *FRONT*	1	-
66	871020748	BOLT -	1	-
67	532194737	BUSHING *FRONT*	1	-
68	873900700	NUT -	1	-
69	532199162	WASHER -	1	-
70	585338801	BRACKET -	1	-
75	587738906	KIT *Includes pinion and screw*	1	-
76	580683601	SCREW -	1	-
78	532057079	WASHER -	1	-
122	532444962	CAP -	1	-
1	532059192	CAP -	1	-
2	532065139	NIPPLE -	1	-
3	532181839	RIM ASSY *Front*	1	-
4	532008134	HOSE *Front (Service Item Only)*	1	-
5	532161024	TIRE *For 96043024500. FRONT (16 X 6.5-8).*	1	-
5	593145101	TIRE *For 96041041900, 96043029000, 96043030500, 96043032100. FRONT (16 X 6.5-8).*	1	-
6	532000278	NIPPLE *Front Wheel Only*	1	-
7	532009040	BEARING *Front Wheel Only*	1	-
8	532175039	HUB CAP *Front Wheel Only*	1	-
9	532170453	TIRE *For 96043024500. REAR (23 X 10.5-12).*	1	-
9	593145201	TIRE	1	-

Ref.	Article N.	Description	Qty	Kit
		For 96041041900, 96043029000, 96043030500, 96043032100. REAR (23 X 10.5-12).		
10	532007154	HOSE *Rear (Service Item Only*	1	-
11	532144510	WHEEL *For 96043024500, 96041041900, 96043029000. Rear.*	1	-
11	593144801	TIRE *For 96043030500, 96043032100. Rear.*	1	-
12	501503101	CAP -	1	-
16	532144334	SEALING FOAM *For 96043030500*	1	-
1	900000002	DUMMY PART *ENGINE KAWA MODEL NO. FR730V-ES04 (445363)*	1	-
2	589818701	MUFFLER -	1	-
9	501832602	KEEPER -	1	-
9	596501502	KEEPER *For 96043030500, 96043032100*	1	-
11	587241401	CLUTCH -	1	-
12	532194343	PULLEY -	1	-
15	532422909	FUEL TANK *Fits 2.75 filler neck. For 96043030500*	1	-
15	598732401	FUEL TANK *Fits 2.75 filler neck. For 96043032100*	1	-
15	590599402	TANK *Fits 2.75 filler neck. For 96043024500, 96041041900*	1	-
18	597478501	FUEL CAP ASSY *Fits 2.75 filler neck. For 96043030500*	1	-
18	529989702	CAP *Fits 2.00 filler neck*	1	-
18	529989703	CAP *Fits 2.00 filler neck*	1	-
18	585124801	FUEL CAP ASSY *Fits 2.75 filler neck. For 96043024500, 96041041900, 96043032100*	1	-
18	599502201	FUEL CAP ASSY *Fits 2.75 filler neck. For 96043030500*	1	-
20	532424341	THROTTLE CONTROL -	1	-
21	532416358	SCREW	1	-

Ref.	Article N.	Description	Qty	Kit
		For 96043024500, 96041041900		
21	596321701	SCREW *For 96043030500, 96043032100*	1	-
22	532189541	CHOKE CONTROL -	1	-
28	532401135	LINE *For 96043030500*	1	-
29	532137180	SPARK ARRESTER -	1	-
30	532401135	LINE *For 96043030500*	1	-
37	532123487	HOSE CLAMP *For 96043030500*	1	-
38	532123487	HOSE CLAMP *For 96043030500*	1	-
41	532126197	WASHER -	1	-
42	596238901	WASHER *For 96043030500, 96043032100*	1	-
42	539990247	WASHER *For 96043024500, 96041041900*	1	-
45	586668901	NUT *For 96043024500, 96041041900*	1	-
45	596133601	LOCK NUT *For 96043030500, 96043032100*	1	-
62	532434017	SHIELD -	1	-
69	532178151	GASKET -	1	-
70	583955601	TUBE *LH*	1	-
71	583955701	TUBE *RH*	1	-
81	532148456	TUBE -	1	-
85	501606901	BOLT -	1	-
86	532184362	NUT -	1	-
90	817000616	SCREW -	1	-
91	532187495	BUSHING -	1	-

Ref.	Article N.	Description	Qty	Kit
92	817120616	SCREW -	1	-
102	817000512	SCREW -	1	-
109	532414114	FILTER *For 96043030500*	1	-
110	532414118	VALVE ASSY *For 96043030500*	1	-
112	532401135	LINE *For 96043030500*	1	-
113	532414127	VALVE *For 96043030500*	1	-
116	539132624	KNOB -	1	-
117	532420828	VALVE FUEL RESERVE *For 96043030500, 96043032100*	1	-
138	532420718	PURGE *For 96043030500*	1	-
138	596941501	TUBE *For 96043030500*	1	-
143	590044401	SENSOR *For 96043024500, 96041041900*	1	-

ENGINE

For 96043024500, 96041041900, 96043030500, 96043032100

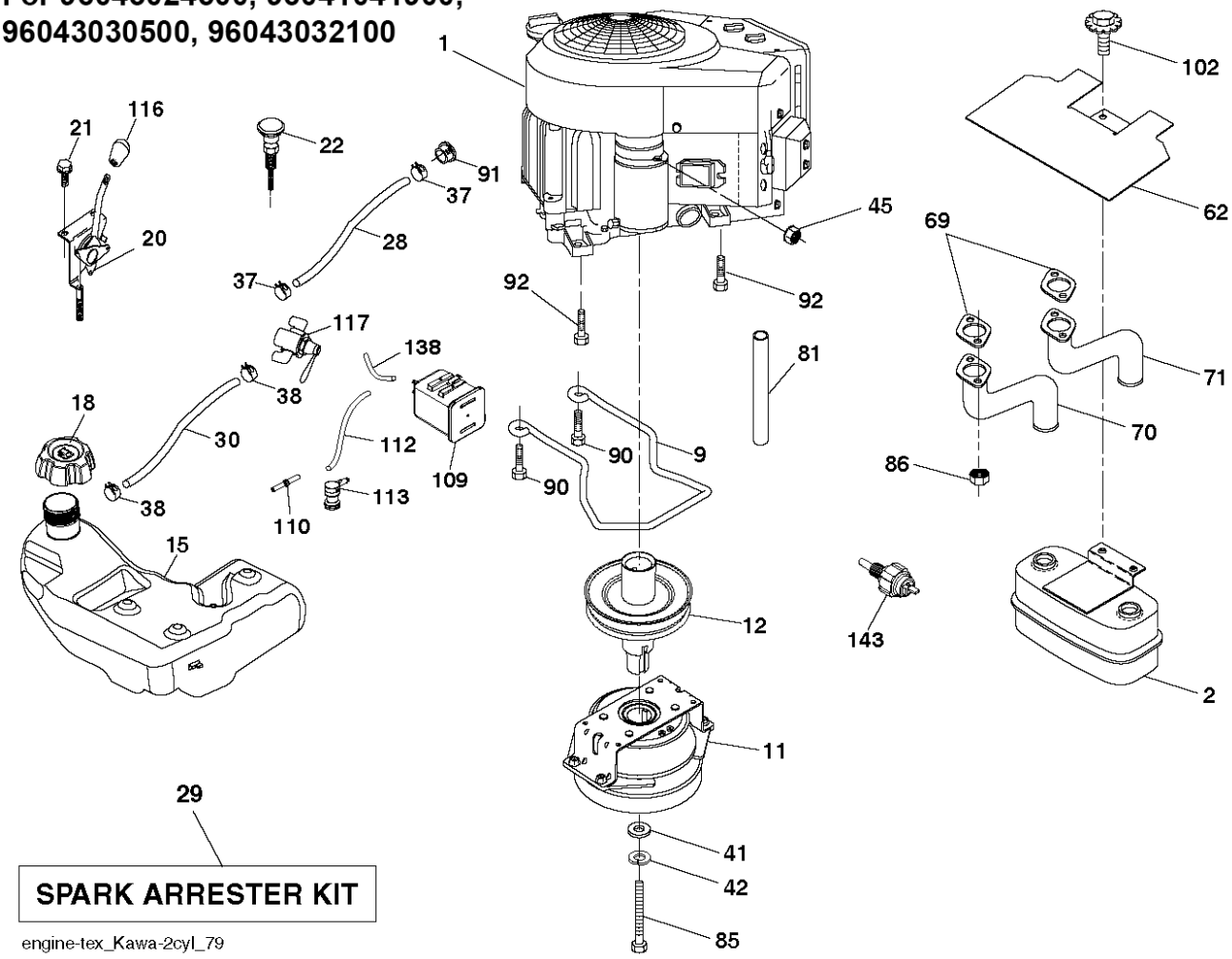

Ref.	Article N.	Description	Qty	Kit
2	580434401	DRAWBAR -	1	-
3	532444481	LOGOTYPE -	1	-
5	590748817	DASHBOARD *For 96043029000*	1	-
5	590748819	DASHBOARD *For 96041041900, 96043030500, 96043032100*	1	-
5	590748822	DASHBOARD *For 96043024500*	1	-
14	532441177	HOOD -	1	-
15	585420301	LENS *LH*	1	-
18	597247301	GRILLE *For 96043032100 and 96043030500*	1	-
18	587523401	GRILLE -	1	-

Ref.	Article N.	Description	Qty	Kit
19	596133201	WASHER *For 96043030500, 96043032100, 96043029000*	1	-
19	596134901	WASHER *For 96043024500, 96041041900, 96043029000*	1	-
25	585420201	LENS *RH*	1	-
36	817060512	SCREW -	1	-
37	532441208	FENDER *For 96043024500, 96043030500, 96043032100*	1	-
37	590534702	FENDER *For 96041041900, 96043029000*	1	-
58	532194314	BRACKET -	1	-
68	596030701	SCREW *For 96043030500, 96043032100, 96043029000*	1	-
68	539990858	SCREW *For 96043024500, 96041041900, 96043029000*	1	-
105	532431882	GUARD -	1	-
125	581684801	CLIP -	1	-
130	532416358	SCREW *For 96043024500, 96041041900, 96043029000*	1	-
130	596321701	SCREW *For 96043030500, 96043032100, 96043029000*	1	-
137	532407590	BUMPER -	1	-
146	581857901	BOLT -	1	-
150	532439774	AIR DUCT -	1	-
151	532436670	BRACKET -	1	-
152	532439870	SHIELD -	1	-
159	817000612	SCREW -	1	-
161	532439929	CONSOLE *For 96043032100*	1	-
161	532401801	CONSOLE *For 96043024500, 96043029000, 96043030500*	1	-
162	596134101	SCREW	1	-

Ref.	Article N.	Description	Qty	Kit
		For 96043030500, 96043032100, 96043029000		
162	532142432	SCREW *For 96043024500, 96041041900, 96043029000*	1	-
165	532194330	SUPPORT -	1	-
175	590607702	CROSS MEMBER -	1	-
176	532400776	SCREW -	1	-
177	532195228	BUSHING -	1	-
179	532168937	WASHER -	1	-
180	593346301	CHASSIS -	1	-
182	532406859	DASH -	1	-
183	595305701	SCREW *For 96043030500, 96043032100, 96043029000*	1	-
183	874520520	BOLT *For 96043024500, 96041041900, 96043029000*	1	-
189	817000512	SCREW -	1	-
191	586182801	REFLECTOR -	1	-
194	596135701	LOCK NUT *For 96043030500, 96043032100, 96043029000*	1	-
194	873900500	NUT *For 96043024500, 96041041900, 96043029000*	1	-
195	532404137	PLUG *For 96043024500, 96041041900*	1	-
196	532439674	CONSOLE *For 96043024500, 96041041900, 96043029000, 96043030500*	1	-
196	532439716	CONSOLE *For 96043032100*	1	-
199	532198259	PLATE -	1	-
202	532439728	COVER *RH*	1	-
203	532439727	COVER *LH*	1	-
204	587485801	VENT -	1	-

Ref.	Article N.	Description	Qty	Kit
205	532439730	TRIM *RH*	1	-
206	532439729	TRIM *LH*	1	-
207	585420002	BEZEL *RH*	1	-
208	585420102	BEZEL *LH*	1	-
214	532199145	CLIP -	1	-
217	532409167	ROD -	1	-
221	532198909	LENS *LH*	1	-
228	593824001	STUD *For 96043029000, 96043032100*	1	-
228	532195161	STUD -	1	-
235	532406129	SPACER *For 96043024500, 96041041900, 96043029000*	1	-
235	596564201	SPACER *For 96043030500, 96043032100, 96043029000*	1	-
236	873930500	NUT -	1	-
281	817000616	SCREW -	1	-
296	585420501	LIGHT -	1	-
297	586182901	REFLECTOR -	1	-
299	585420401	LIGHT -	1	-
306	873900600	NUT -	1	-
335	532448204	COVER -	1	-
336	532445309	COVER -	1	-
350	532445143	CLIP -	1	-
351	532421734	PEN -	1	-
352	532448634	CLEVIS PIN	1	-

Ref.	Article N.	Description	Qty	Kit
		-		
353	532178062	CLIP -	1	-
354	532448619	SUPPORT -	1	-
354	593196901	SUPPORT *For 96043029000, 96043030500, 96043029000, 96043032100*	1	-
355	532448636	BELLCRANK -	1	-
356	532448693	LINK -	1	-
357	532448684	COMPRESSION SPRING -	1	-
358	580366601	STUD *For 96043024500, 96041041900, 96043029000*	1	-
358	599128101	STUD *For 96043030500, 96043029000, 96043032100*	1	-
359	584393401	ACTUATOR -	1	-
360	532448618	BRACKET -	1	-
361	596564002	BOLT *For 96043030500, 96043032100, 96043029000*	1	-
361	817490610	SCREW *For 96043024500, 96041041900, 96043029000*	1	-
362	532448633	CLEVIS PIN -	1	-
365	532447368	SPACER -	1	-
375	586908201	BUMPER -	1	-
378	590849801	BUSHING -	1	-
379	593206902	PLATE -	1	-
1	581578901	DECAL *For 96043024500, 96043029000, 96043030500*	1	-
1	581579001	DECAL *For 96043024500, 96043029000*	1	-
1	586047302	DECAL *For 96041041900*	1	-
2	589357901	DECAL -	1	-

Ref.	Article N.	Description	Qty	Kit
2	589357902	DECAL *For 96043032100*	1	-
3	592898301	DECAL *For 96043024500*	1	-
4	591164701	DECAL *For 96041041900, 96043029000, 96043030500, 96043032100*	1	-
5	587015101	DECAL *For 96043024500, 96043029000*	1	-
5	597470101	DECAL *For 96043030500, 96043032100*	1	-
6	596024201	DECAL *For 96043030500*	1	-
7	590885101	DECAL *For 96043024500*	1	-
7	593808801	DECAL *For 96041041900, 96043029000, 96043030500, 96043032100*	1	-
8	586978801	DECAL -	1	-
9	591164701	DECAL *For 96041041900, 96043029000, 96043030500, 96043032100*	1	-
10	501082601	DECAL *For 96041041900*	1	-
11	592898301	DECAL *For 96043024500*	1	-
14	591448701	DECAL -	1	-
15	532423829	DECAL *For 96043024500, 96041041900, 96043029000, 96043030500*	1	-
16	581627301	DECAL -	1	-
17	590937401	DECAL *For 96043024500, 96043030500, 96043032100*	1	-
17	594110601	DECAL *For 96041041900. (582 45 79-01) DECAL.*	1	-
17	596970801	DECAL *For 96043029000*	1	-
30	581579001	DECAL *For 96043024500, 96043029000*	1	-
31	586742201	DECAL *For 96043024500, 96043029000*	1	-
32	581724801	DECAL -	1	-
33	581724802	DECAL	1	-

Ref.	Article N.	Description	Qty	Kit
		For 96043032100		
34	532439882	PAD -	1	-
35	532439881	PAD -	1	-
1	900000002	DUMMY PART *TRANSAXLE TUFFTORQ K66ELD (580402201)*	1	-
2	539912757	KEY -	1	-
3	532007563	WASHER -	1	-
7	586935402	HUB -	1	-
9	532140080	BOLT *For 96043024500, 96041041900, 96043029000*	1	-
9	596218701	BOLT *For 96043030500, 96043032100, 96043029000*	1	-
15	596565301	WASHER *For 96043029000, 96043032100*	1	-
15	819131316	WASHER -	1	-
17	532401072	SPRING -	1	-
26	532199679	SPRING -	1	-
29	532407245	ROD -	1	-
33	812000053	E-CLIP -	1	-
35	590605902	ROD *For 96043024500, 96043029000, 96043030500, 96043032100*	1	-
35	583864501	ROD *For 96041041900*	1	-
42	532008883	PEDAL -	1	-
49	596136201	BOLT *For 96043030500, 96043032100, 96043029000*	1	-
49	872110614	BOLT *For 96043024500, 96041041900, 96043029000*	1	-
50	532194327	PULLEY -	1	-
51	873900600	NUT -	1	-

Ref.	Article N.	Description	Qty	Kit
52	532194326	PULLEY -	1	-
56	592855301	DRIVE BELT -	1	-
64	532197865	SHAFT -	1	-
69	583404901	PIN *For 96043024500*	1	-
69	532423303	HAIR PIN COTTER *For 96041041900, 96043029000, 96043030500, 96043032100*	1	-
70	532439661	CONSOLE -	1	-
73	595316601	BOLT *For 96043030500, 96043032100, 96043029000*	1	-
73	874490544	SCREW *For 96043024500, 96041041900, 96043029000*	1	-
74	596134101	SCREW *For 96043030500, 96043032100, 96043029000*	1	-
74	532142432	SCREW *For 96043024500, 96041041900, 96043029000*	1	-
80	589333402	STRAP -	1	-
92	595305701	SCREW -	1	-
99	582404701	ROD -	1	-
116	596135701	LOCK NUT -	1	-
125	817000512	SCREW -	1	-
153	532004497	CLIP -	1	-
159	596029501	PIN *For 96043030500, 96043032100, 96043029000*	1	-
159	876020412	SPLIT PIN *For 96043024500, 96041041900, 96043029000*	1	-
161	532105709	SPRING -	1	-
163	532407246	ROD -	1	-
166	532429164	NUT -	1	-
167	532405257	LATCH	1	-

Ref.	Article N.	Description	Qty	Kit
		-		
170	532194322	KEEPER -	1	-
171	596136301	BOLT -	1	-
177	587225301	PIN *For 96043030500, 96043032100, 96043029000*	1	-
177	532169484	PIN *For 96043024500, 96041041900, 96043029000*	1	-
177	596029401	RETAINER *For 96043030500, 96043032100, 96043029000*	1	-
183	598873002	SPACER *For 96043032100*	1	-
183	587587401	SPACER -	1	-
184	587653701	HANDLE -	1	-
185	872110622	BOLT -	1	-
186	532194321	SPACER -	1	-
187	596135501	WASHER -	1	-
188	582217001	LINK -	1	-
189	532194317	PLATE -	1	-
190	532194318	BELT GUIDE -	1	-
196	817000616	SCREW -	1	-
197	585658601	CLUTCH *For 96043024500, 96041041900*	1	-
197	587402001	BRACKET *For 96043029000*	1	-
197	585658602	BOSS *For 96043030500, 96043032100, 96043029000*	1	-
205	532123800	WASHER -	1	-
206	532448596	BRACKET -	1	-
207	587031402	LATCH *For 96043030500, 96043032100, 96043029000*	1	-

Ref.	Article N.	Description	Qty	Kit
207	587031401	LATCH *For 96043024500, 96041041900, 96043029000*	1	-
208	532197869	SUPPORT *For 96043024500, 96041041900, 96043029000*	1	-
208	596564101	GEAR *For 96043030500, 96043032100, 96043029000*	1	-
209	590527802	ROD *For 96043024500, 96043029000, 96043030500, 96043032100*	1	-
209	532199592	ROD *For 96041041900*	1	-
210	532197860	ARM *RH*	1	-
211	532120183	BEARING -	1	-
213	532403119	CONTROL -	1	-
214	532421263	PAD -	1	-
215	586606502	PEDAL -	1	-
220	532198908	LENS *RH*	1	-
221	532403187	SPRING -	1	-
222	879212010	WASHER -	1	-
225	532407311	KEEPER -	1	-
226	532407109	BRACKET -	1	-
282	874490548	BOLT -	1	-
366	580626201	BRACKET *For 96043024500, 96041041900*	1	-
366	580626202	BRACKET *For 96043029000, 96043030500, 96043032100*	1	-
366	592878002	BRACKET *For 96043029000, 96043032100*	1	-
1	532163465	BATTERY -	1	-
2	874760412	BOLT -	1	-
8	587205101	TRAY	1	-

Ref.	Article N.	Description	Qty	Kit
		-		
16	532176138	MICRO SWITCH -	1	-
21	532400252	HARNESS *For 96043024500*	1	-
21	585436401	HARNESS *For 96041041900*	1	-
24	585555601	CABLE *For 96043024500*	1	-
24	590223801	PRIMARY CABLE *For 96041041900*	1	-
25	585555501	CABLE -	1	-
26	532175158	FUSE -	1	-
27	586668901	NUT -	1	-
28	532416588	CABLE *For 96043024500*	1	-
28	590223702	GROUND CABLE *For 96041041900*	1	-
29	532401545	SWITCH *For 96043024500*	1	-
29	587648401	SWITCH *For 96041041900*	1	-
30	532193350	IGNITION MODULE -	1	-
33	532411935	KEY *For 96041041900*	1	-
33	532411933	KEY *For 96043024500*	1	-
34	532110712	SWITCH -	1	-
40	501133101	HARNESS *For 96043024500*	1	-
40	590193201	WIRING ASSY *For 96041041900*	1	-
41	817720408	SCREW -	1	-
42	532131563	COVER -	1	-
43	582042801	SOLENOID -	1	-

Ref.	Article N.	Description	Qty	Kit
45	590645901	GAUGE *For 96041041900*	1	-
45	587553903	GAUGE *For 96043024500*	1	-
46	594721501	GAUGE *For 96041041900*	1	-
46	587554003	GAUGE *For 96043024500*	1	-
50	582107601	SWITCH -	1	-
55	817060512	SCREW -	1	-
71	532194276	CABLE ASSY *For 96043024500*	1	-
71	590193302	WIRING ASSY *For 96041041900*	1	-
75	580366401	SWITCH *For 96041041900*	1	-
90	532435395	TERMINAL COVER -	1	-
99	817670412	SCREW -	1	-
100	819091416	WASHER -	1	-
102	532404454	CABLE -	1	-
105	532407568	SWITCH *For 96043024500*	1	-
144	590568001	CONTROL UNIT -	1	-
146	590193401	WIRING ASSY -	1	-
1	532163465	BATTERY -	1	-
2	874760412	BOLT -	1	-
8	532414126	TRAY *For 96043030500*	1	-
8	587205101	TRAY *For 96043029000, 96043032100*	1	-
16	532176138	MICRO SWITCH -	1	-
21	585436401	HARNESS	1	-

Ref.	Article N.	Description	Qty	Kit
		-		
24	585555601	CABLE -	1	-
25	585555501	CABLE -	1	-
26	532175158	FUSE -	1	-
27	586668901	NUT *For 96043029000*	1	-
27	596133601	LOCK NUT *For 96043030500, 96043032100, 96043029000*	1	-
28	532416588	CABLE -	1	-
29	532192749	SWITCH -	1	-
30	532193350	IGNITION MODULE -	1	-
33	532411935	KEY -	1	-
34	532110712	SWITCH -	1	-
40	501133601	HARNESS -	1	-
41	817720408	SCREW -	1	-
42	532131563	COVER -	1	-
43	582042801	SOLENOID *For 96043029000*	1	-
43	582042802	SOLENOID *For 96043030500, 96043032100, 96043029000*	1	-
45	587553903	GAUGE *For 96043029000*	1	-
45	587553906	GAUGE *For 96043030500, 96043032100, 96043029000*	1	-
46	587554003	GAUGE *For 96043029000*	1	-
46	587554006	GAUGE *For 96043030500, 96043032100, 96043029000*	1	-
50	582107601	SWITCH -	1	-
50	582107602	SWITCH *for all models*	1	-

Ref.	Article N.	Description	Qty	Kit
55	817060512	SCREW -	1	-
59	532400303	ELECTRICAL SYSTEM *For 96043029000*	1	-
59	596941001	RECEPTACLE *For 96043030500, 96043032100, 96043029000*	1	-
71	580513001	HARNESS -	1	-
75	580366401	SWITCH -	1	-
90	532435395	TERMINAL COVER -	1	-
99	817670412	SCREW -	1	-
100	596135301	WASHER *For 96043030500, 96043032100, 96043029000*	1	-
100	819091416	WASHER *For 96043029000*	1	-
102	532404454	CABLE -	1	-
103	532421747	HARNESS -	1	-
105	532407568	SWITCH -	1	-
1	900000002	DUMMY PART *Engine Kohler Model No. KT745-3093 (596957201) For 96043029000*	1	-
2	589818701	MUFFLER	1	-
9	501832602	KEEPER	1	-
9	596501502	KEEPER	1	-
11	587241401	CLUTCH	1	-
12	586899601	PULLEY	1	-
15	532438030	FUEL TANK ASSY *Fits 2.75 filler neck*	1	-
15	532438024	FUEL TANK ASSY *Fits 2.75 filler neck*	1	-
18	529989702	CAP *Fits 2.00 filler neck*	1	-
18	529989703	CAP *Fits 2.00 filler neck*	1	-
18	585124801	FUEL CAP ASSY *Fits 2.75 filler neck*	1	-
20	532424341	THROTTLE CONTROL	1	-

Ref.	Article N.	Description	Qty	Kit
21	532416358	SCREW	1	-
21	596321701	SCREW	1	-
28	532401135	LINE	1	-
29	532137180	SPARK ARRESTER	1	-
37	532123487	HOSE CLAMP	1	-
41	532126197	WASHER	1	-
42	596238901	WASHER	1	-
42	539990247	WASHER	1	-
45	586668901	NUT	1	-
45	596133601	LOCK NUT	1	-
62	532434017	SHIELD	1	-
69	532178151	GASKET	1	-
70	583955601	TUBE *LH*	1	-
71	583955701	TUBE *RH*	1	-
81	532148456	TUBE	1	-
82	532428287	PLUG	1	-
85	501606901	BOLT	1	-
86	532184362	NUT	1	-
90	817000616	SCREW	1	-
91	532187495	BUSHING	1	-
92	817120616	SCREW	1	-
102	817000512	SCREW	1	-
116	539132624	KNOB	1	-
117	532420828	VALVE FUEL RESERVE	1	-
1	588549002	DECK SHELL ASSY *For 96043024500, 96041041900*	1	-
1	592618801	SERVICE KIT *For 96043029000, 96043030500, 96043032100*	1	-
1	592618901	SERVICE KIT *For 96041041900, 96043029000, 96043030500, 96043032100*	1	-
6	590304303	COVER -	1	-
7	590304203	COVER *For 96043024500, 96041041900, 96043030500, 96043032100, 96043029000*	1	-
8	532193003	SCREW -	1	-
11	582760508	BLADE *For 96043029000, 96043032100*	1	-

Ref.	Article N.	Description	Qty	Kit
11	582760502	BLADE *For 96043024500, 96041041900, 96043030500, 96043029000, 96043032100*	1	-
14	539131898	SPINDLE *Aluminium*	1	-
20	532197236	SPACER -	1	-
22	596564003	BOLT -	1	-
22	599972501	BOLT *For 96043030500*	1	-
23	588438301	SCREW -	1	-
24	532105304	HUB CAP -	1	-
25	587354701	SPRING -	1	-
26	532110452	NUT -	1	-
27	590632201	DEFLECTOR ASSY -	1	-
28	596240801	BOLT *For 96043030500, 96043032100, 96043029000*	1	-
28	539115574	EYE BOLT *For 96043024500, 96041041900, 96043029000*	1	-
29	532131491	SHAFT *For 96043024500, 96041041900, 96043029000*	1	-
29	595297001	ROD *For 96043030500, 96043032100, 96043029000*	1	-
31	532187690	WASHER -	1	-
32	532173435	PULLEY *For 96043024500, 96041041900, 96043029000*	1	-
32	532173436	PULLEY *For 96043030500, 96043032100*	1	-
33	596134801	HEXAGON NUT *For 96043030500, 96043032100, 96043029000*	1	-
33	532400234	NUT *For 96043024500, 96041041900, 96043029000*	1	-
34	596322601	NUT *For 96043030500, 96043032100, 96043024500, 96043029000*	1	-
34	873680600	NUT *For 96041041900, 96043029000*	1	-
36	596039201	LOCK NUT	1	-

Ref.	Article N.	Description	Qty	Kit
		For 96043030500, 96043032100, 96043029000		
36	539990585	NUT *For 96043024500, 96041041900, 96043029000*	1	-
37	532170165	BOLT -	1	-
41	584953901	BOLT -	1	-
42	596952201	PLUG *For 96043024500, 96041041900, 96043030500, 96043029000, 96043032100*	1	-
43	582219602	ARM -	1	-
46	532137729	SCREW -	1	-
47	582236301	DRIVE BELT -	1	-
48	574196502	TUBE -	1	-
49	873900600	NUT -	1	-
51	574169601	ROLLER -	1	-
52	532197379	PULLEY -	1	-
53	872140864	BOLT *For 96043024500, 96041041900, 96043029000*	1	-
53	594944501	BOLT *For 96043030500, 96043032100, 96043029000*	1	-
54	521991101	NUT *For 96043024500, 96041041900, 96043029000, 96043032100*	1	-
54	521991102	NUT *For 96043030500, 96043029000, 96043032100*	1	-
61	596274401	ROD *For 96043030500, 96043032100, 96043029000*	1	-
61	532400337	TIGE ANTI-ROULIS *For 96043024500, 96041041900, 96043029000*	1	-
62	596133201	WASHER *For 96043030500, 96043032100, 96043029000*	1	-
62	596134901	WASHER *For 96043024500, 96041041900, 96043029000*	1	-
63	532194208	PIN -	1	-
66	590732501	BUMPER ASSY -	1	-

Ref.	Article N.	Description	Qty	Kit
97	532178515	WASHER -	1	-
98	587358401	SPRING -	1	-
109	532416405	COUPLING -	1	-
116	596434404	BOLT -	1	-
117	589527301	WHEEL -	1	-
184	596135701	LOCK NUT *For 96043029000*	1	-
187	593824001	STUD *For 96043029000, 96043030500, 96043032100*	1	-
187	532195161	STUD -	1	-
189	532195185	ARM *For 96043024500*	1	-
189	587140502	ARM *For 96041041900, 96043029000, 96043030500, 96043032100*	1	-
190	532196539	BOLT -	1	-
192	532198468	BELT GUIDE -	1	-
196	872140620	BOLT *For 96043024500, 96041041900*	1	-
196	596337801	BOLT *For 96043030500, 96043029000, 96043032100*	1	-
196	539128101	BOLT *For 96043029000, 96043032100*	1	-
242	532415598	HOSE COUPLING -	1	-
2	532422027	SHAFT -	1	-
3	596270601	LEVER *For 96043030500, 96043032100, 96043029000*	1	-
3	532195230	LEVER *For 96043024500, 96041041900, 96043029000*	1	-
7	580962301	GRIP -	1	-
10	532196314	SPRING -	1	-
41	532175994	NUT	1	-

Ref.	Article N.	Description	Qty	Kit
		For 96043024500, 96041041900, 96043029000		
41	589464902	NUT *For 96043030500, 96043032100, 96043029000*	1	-
87	532194209	SPRING -	1	-
88	532195301	SPRING *For 96043029000, 96043030500, 96043032100*	1	-
88	532195304	SPRING -	1	-
89	819191912	WASHER -	1	-
91	532403407	LINK *For 96043024500, 96041041900, 96043029000*	1	-
91	589464805	LINK ASSY *For 96043030500, 96043032100, 96043029000*	1	-
96	532195263	BUSHING *For 96043024500, 96041041900, 96043029000*	1	-
96	593842101	BUSHING *For 96043030500, 96043032100, 96043029000*	1	-
97	817000612	SCREW -	1	-
98	589318703	DECK ATTACHMENT -	1	-
114	873360700	NUT -	1	-
1	900000002	DUMMY PART	1	-
1	588556701	SEAT *For 96043024500*	1	-
1	590337301	SEAT *For 96043030500, 96043032100*	1	-
1	590337302	SEAT *For 96041041900, 96043029000*	1	-
2	590336602	BRACKET -	1	-
3	590777602	BRACKET -	1	-
6	521996501	NUT *For 96043024500, 96041041900, 96043029000*	1	-
6	521996502	NUT *For 96043030500, 96043032100, 96043029000*	1	-
7	590812301	SPRING -	1	-
8	532171877	BOLT	1	-

Ref.	Article N.	Description	Qty	Kit
		-		
10	590481702	BRACKET -	1	-
19	590691501	KNOB -	1	-
21	596231101	BOLT -	1	-
37	594944401	NUT *For 96043029000, 96043030500, 96043032100*	1	-
37	539112899	NUT, 5/16-18, NYLOC -	1	-
42	532199371	WASHER -	1	-
47	590351101	WASHER -	1	-
1	532439740	STEERING WHEEL *For 96043024500, 96041041900, 96043029000*	1	-
1	597866101	SERVICE KIT *For 96043030500, 96043032100. Steering wheel and steering cap.*	1	-
2	532195968	SHAFT *FRONT*	1	-
4	532403089	SPINDLE SHAFT *LH*	1	-
5	532403090	SPINDLE SHAFT *RH*	1	-
6	532006266	WASHER -	1	-
7	532121748	WASHER -	1	-
8	812000029	RETAINER RING -	1	-
9	532121232	HUB CAP -	1	-
13	532121749	WASHER -	1	-
14	596238701	WASHER *For 96043030500, 96043032100, 96043029000*	1	-
14	539990118	WASHER *For 96043024500, 96041041900, 96043029000*	1	-
15	873540600	NUT -	1	-
16	587016002	SHAFT -	1	-

Ref.	Article N.	Description	Qty	Kit
19	532194729	PLATE -	1	-
21	586840201	ADAPTER -	1	-
22	585029901	BEARING -	1	-
26	532439743	HUB CAP *For 96043024500, 96041041900, 96043029000*	1	-
26	594949101	CAP *For 96043030500, 96043032100*	1	-
27	596933401	WASHER *For 96043030500, 96043032100, 96043029000*	1	-
27	819211616	WASHER *For 96043024500, 96041041900, 96043029000*	1	-
28	817000612	SCREW *For 96041041900, 96043029000, 96043030500, 96043032100*	1	-
29	817000612	SCREW *For 96041041900, 96043029000, 96043030500, 96043032100*	1	-
35	532194732	PLATE -	1	-
45	587016401	WASHER -	1	-
50	873900600	NUT -	1	-
53	532188967	WASHER -	1	-
54	874760636	BOLT -	1	-
55	532414736	SPACER -	1	-
58	532194747	BOLT -	1	-
59	532194748	WASHER -	1	-
60	873971000	NUT -	1	-
61	588794402	LINK ASSY *For 96043024500, 96041041900, 96043029000. LH.*	1	-
61	597070202	LINKAGE *For 96043030500, 96043032100, 96043029000. LH.*	1	-
62	588794502	LINK ASSY *For 96043024500, 96041041900, 96043029000. RH.*	1	-
62	597070302	LINKAGE	1	-

Ref.	Article N.	Description	Qty	Kit
		For 96043030500, 96043032100, 96043029000. RH.		
63	817000512	SCREW -	1	-
64	532199849	SPRING RETAINER -	1	-
65	532194734	BRACKET *FRONT*	1	-
66	871020748	BOLT -	1	-
67	532194737	BUSHING *FRONT*	1	-
68	873900700	NUT -	1	-
69	532199162	WASHER -	1	-
70	585338801	BRACKET -	1	-
75	587738906	KIT *Includes pinion and screw*	1	-
76	580683601	SCREW -	1	-
78	532057079	WASHER -	1	-
122	532444962	CAP -	1	-
1	532059192	CAP -	1	-
2	532065139	NIPPLE -	1	-
3	532181839	RIM ASSY *Front*	1	-
4	532008134	HOSE *Front (Service Item Only)*	1	-
5	532161024	TIRE *For 96043024500. FRONT (16 X 6.5-8).*	1	-
5	593145101	TIRE *For 96041041900, 96043029000, 96043030500, 96043032100. FRONT (16 X 6.5-8).*	1	-
6	532000278	NIPPLE *Front Wheel Only*	1	-
7	532009040	BEARING *Front Wheel Only*	1	-
8	532175039	HUB CAP	1	-

Ref.	Article N.	Description	Qty	Kit
		Front Wheel Only		
9	532170453	TIRE *For 96043024500. REAR (23 X 10.5-12).*	1	-
9	593145201	TIRE *For 96041041900, 96043029000, 96043030500, 96043032100. REAR (23 X 10.5-12).*	1	-
10	532007154	HOSE *Rear (Service Item Only*	1	-
11	532144510	WHEEL *For 96043024500, 96041041900, 96043029000. Rear.*	1	-
11	593144801	TIRE *For 96043030500, 96043032100. Rear.*	1	-
12	501503101	CAP -	1	-
16	532144334	SEALING FOAM *For 96043030500*	1	-
1	900000002	DUMMY PART *ENGINE KAWA MODEL NO. FR730V-ES04 (445363)*	1	-
2	589818701	MUFFLER -	1	-
9	501832602	KEEPER -	1	-
9	596501502	KEEPER *For 96043030500, 96043032100*	1	-
11	587241401	CLUTCH -	1	-
12	532194343	PULLEY -	1	-
15	532422909	FUEL TANK *Fits 2.75 filler neck. For 96043030500*	1	-
15	598732401	FUEL TANK *Fits 2.75 filler neck. For 96043032100*	1	-
15	590599402	TANK *Fits 2.75 filler neck. For 96043024500, 96041041900*	1	-
18	597478501	FUEL CAP ASSY *Fits 2.75 filler neck. For 96043030500*	1	-
18	529989702	CAP *Fits 2.00 filler neck*	1	-
18	529989703	CAP *Fits 2.00 filler neck*	1	-
18	585124801	FUEL CAP ASSY *Fits 2.75 filler neck. For 96043024500, 96041041900, 96043032100*	1	-
18	599502201	FUEL CAP ASSY	1	-

Ref.	Article N.	Description	Qty	Kit
		Fits 2.75 filler neck. For 96043030500		
20	532424341	THROTTLE CONTROL -	1	-
21	532416358	SCREW *For 96043024500, 96041041900*	1	-
21	596321701	SCREW *For 96043030500, 96043032100*	1	-
22	532189541	CHOKE CONTROL -	1	-
28	532401135	LINE *For 96043030500*	1	-
29	532137180	SPARK ARRESTER -	1	-
30	532401135	LINE *For 96043030500*	1	-
37	532123487	HOSE CLAMP *For 96043030500*	1	-
38	532123487	HOSE CLAMP *For 96043030500*	1	-
41	532126197	WASHER -	1	-
42	596238901	WASHER *For 96043030500, 96043032100*	1	-
42	539990247	WASHER *For 96043024500, 96041041900*	1	-
45	586668901	NUT *For 96043024500, 96041041900*	1	-
45	596133601	LOCK NUT *For 96043030500, 96043032100*	1	-
62	532434017	SHIELD -	1	-
69	532178151	GASKET -	1	-
70	583955601	TUBE *LH*	1	-
71	583955701	TUBE *RH*	1	-
81	532148456	TUBE -	1	-
85	501606901	BOLT -	1	-
86	532184362	NUT -	1	-

Ref.	Article N.	Description	Qty	Kit
90	817000616	SCREW -	1	-
91	532187495	BUSHING -	1	-
92	817120616	SCREW -	1	-
102	817000512	SCREW -	1	-
109	532414114	FILTER *For 96043030500*	1	-
110	532414118	VALVE ASSY *For 96043030500*	1	-
112	532401135	LINE *For 96043030500*	1	-
113	532414127	VALVE *For 96043030500*	1	-
116	539132624	KNOB -	1	-
117	532420828	VALVE FUEL RESERVE *For 96043030500, 96043032100*	1	-
138	532420718	PURGE *For 96043030500*	1	-
138	596941501	TUBE *For 96043030500*	1	-
143	590044401	SENSOR *For 96043024500, 96041041900*	1	-