Product Catalog: Husqvarna/TS 146

CHASSIS AND ENCLOSURES

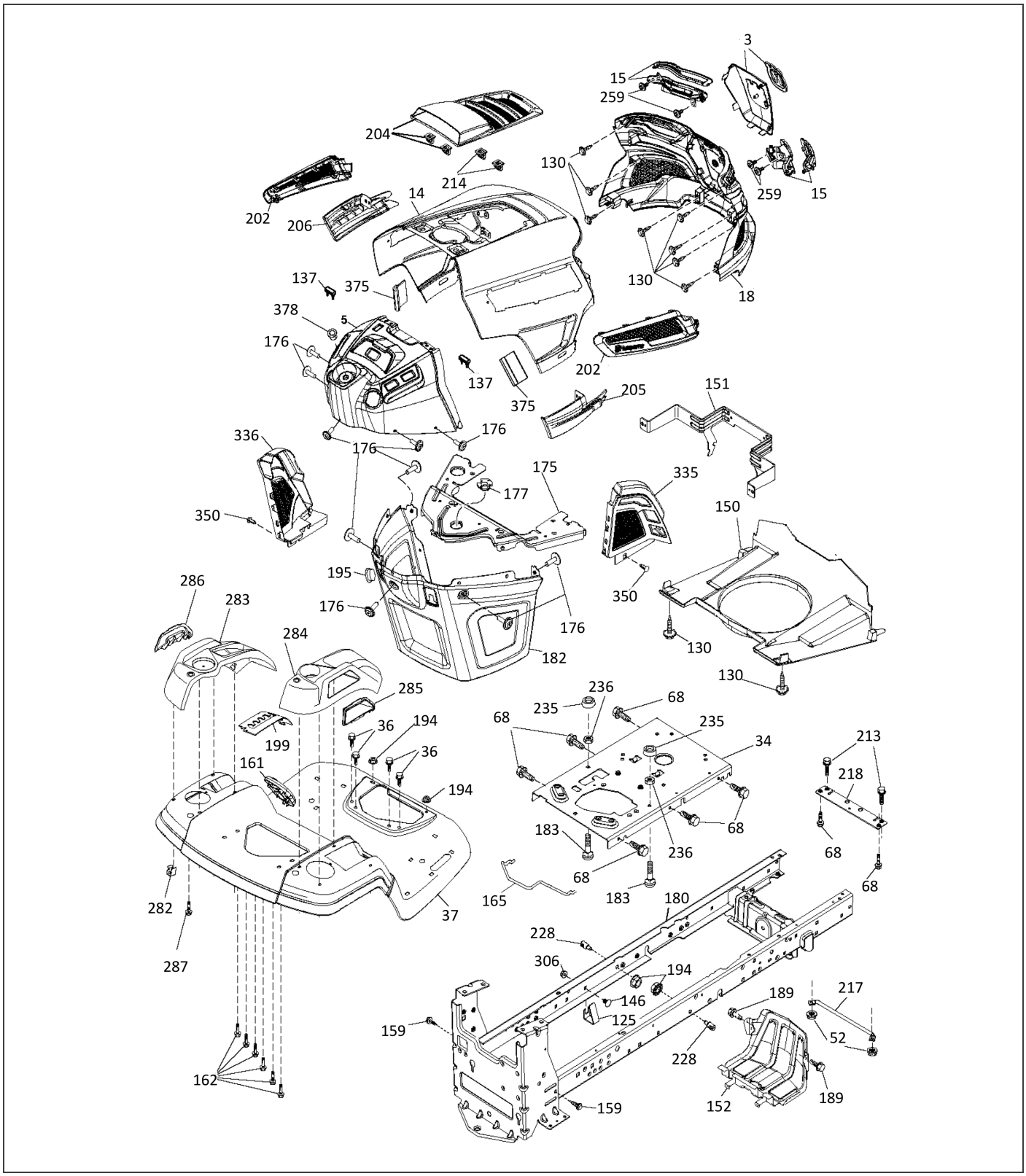

Ref.	Article N.	Description	Qty	Kit
3	597688201	COVER *COVER*	1	-
5	590748818	DASHBOARD *DASHBOARD*	1	-
14	532441177	HOOD *HOOD*	1	-
15	597867801	SERVICE KIT *SERVICE KIT*	1	-
18	597407101	GRILLE *GRILLE*	1	-
34	580910801	CHASSIS *CHASSIS*	1	-
36	817060512	SCREW *SCREW*	1	-
37	532441178	FENDER *FENDER*	1	-
52	596040501	LOCK NUT *LOCK NUT*	1	-
68	596030701	SCREW *SCREW*	1	-
125	581684801	CLIP *CLIP*	1	-
130	596321701	SCREW *SCREW*	1	-
137	532407590	BUMPER *BUMPER*	1	-
146	581857901	BOLT *BOLT*	1	-
150	532439774	AIR DUCT *AIR DUCT*	1	-
151	532436670	BRACKET *BRACKET*	1	-
152	599961102	SHIELD *SHIELD*	1	-
159	817000612	SCREW *SCREW*	1	-
161	532439781	FUEL *FUEL*	1	-
162	596134101	SCREW *SCREW*	1	-
165	532196826	BRACKET *BRACKET*	1	-
175	590607702	CROSS MEMBER	1	-

Ref.	Article N.	Description	Qty	Kit
		CROSS MEMBER		
176	532400776	SCREW *SCREW*	1	-
177	532195228	BUSHING *BUSHING*	1	-
180	532195457	CHASSIS *CHASSIS*	1	-
182	532406859	DASH *DASH*	1	-
183	595305701	SCREW *SCREW*	1	-
189	817000512	SCREW *SCREW*	1	-
194	596135701	LOCK NUT *LOCK NUT*	1	-
195	532404137	PLUG *PLUG*	1	-
199	532413485	PLATE *PLATE*	1	-
202	597867701	SERVICE KIT *SERVICE KIT*	1	-
204	597408001	VENT *VENT*	1	-
205	532439730	TRIM *TRIM*	1	-
206	532439729	TRIM *TRIM*	1	-
213	596030501	SCREW *SCREW*	1	-
214	532199145	CLIP *CLIP*	1	-
217	532409167	ROD *ROD*	1	-
218	532196395	PLATE *PLATE*	1	-
228	593824001	STUD *STUD*	1	-
228	532195161	STUD *STUD*	1	-
235	596564201	SPACER *SPACER*	1	-
236	873930500	NUT *NUT*	1	-

Ref.	Article N.	Description	Qty	Kit
259	596434001	SCREW *SCREW*	1	-
283	532439861	CONSOLE *CONSOLE*	1	-
284	532439823	CONSOLE *CONSOLE*	1	-
285	532416315	CONSOLE *CONSOLE*	1	-
286	532416317	CONSOLE *CONSOLE*	1	-
287	817600406	SCREW *SCREW*	1	-
306	873900600	NUT *NUT*	1	-
335	532448204	COVER *COVER*	1	-
336	532445309	COVER *COVER*	1	-
350	532445143	CLIP *CLIP*	1	-
375	586908201	BUMPER *BUMPER*	1	-
378	590849801	BUSHING *BUSHING*	1	-
379	597334801	BUMPER ASSY *BUMPER ASSY*	1	-
1	900000002	DUMMY PART *DUMMY PART*	1	-
2	532123583	KEY *KEY*	1	-
15	596565301	WASHER *WASHER*	1	-
17	532413678	BRAKE SPRING *BRAKE SPRING*	1	-
26	532199679	SPRING *SPRING*	1	-
29	532403806	ROD *ROD*	1	-
33	812000001	RETAINER RING *RETAINER RING*	1	-
35	590605902	ROD *ROD*	1	-
37	532188967	WASHER	1	-

Ref.	Article N.	Description	Qty	Kit
		WASHER		
42	532008883	PEDAL *PEDAL*	1	-
49	596136201	BOLT *BOLT*	1	-
50	532194327	PULLEY *PULLEY*	1	-
51	873900600	NUT *NUT*	1	-
52	532194326	PULLEY *PULLEY*	1	-
56	592855201	DRIVE BELT *DRIVE BELT*	1	-
64	532197865	SHAFT *SHAFT*	1	-
69	532423303	HAIR PIN COTTER *HAIR PIN COTTER*	1	-
73	596136501	BOLT *BOLT*	1	-
92	595305701	SCREW *SCREW*	1	-
99	582404501	ROD *ROD*	1	-
116	596135701	LOCK NUT *LOCK NUT*	1	-
125	817000512	SCREW *SCREW*	1	-
143	596030701	SCREW *SCREW*	1	-
153	532004497	CLIP *CLIP*	1	-
159	596029501	PIN *PIN*	1	-
161	532105709	SPRING *SPRING*	1	-
163	593861001	ROD *ROD*	1	-
166	532429164	NUT *NUT*	1	-
167	532405257	LATCH *LATCH*	1	-
170	532194322	KEEPER *KEEPER*	1	-

Ref.	Article N.	Description	Qty	Kit
171	596136301	BOLT *BOLT*	1	-
177	587225301	PIN *PIN*	1	-
183	532137057	SPACER *SPACER*	1	-
184	587653701	HANDLE *HANDLE*	1	-
185	872110622	BOLT *BOLT*	1	-
186	532194321	SPACER *SPACER*	1	-
187	596135501	WASHER *WASHER*	1	-
188	582217001	LINK *LINK*	1	-
189	532194317	PLATE *PLATE*	1	-
190	532194318	BELT GUIDE *BELT GUIDE*	1	-
205	532121748	WASHER *WASHER*	1	-
206	532448596	BRACKET *BRACKET*	1	-
207	587031402	LATCH *LATCH*	1	-
208	596564101	GEAR *GEAR*	1	-
209	590527802	ROD *ROD*	1	-
210	532400980	PEDAL ARM *PEDAL ARM*	1	-
211	532120183	BEARING *BEARING*	1	-
213	532403119	CONTROL *CONTROL*	1	-
214	532421263	PAD *PAD*	1	-
215	586606502	PEDAL *PEDAL*	1	-
216	532196131	BRACKET *BRACKET*	1	-
221	532403187	SPRING	1	-

Ref.	Article N.	Description	Qty	Kit
		SPRING		
222	879212010	WASHER *WASHER*	1	-
223	598662601	BOLT *BOLT*	1	-
225	532403319	BELT GUIDE *BELT GUIDE*	1	-
227	596135901	BOLT *BOLT*	1	-
325	585668502	BRACKET *BRACKET*	1	-
326	585670802	BRACKET *BRACKET*	1	-
336	587259602	BOLT *BOLT*	1	-
1	532163465	BATTERY *BATTERY*	1	-
2	874760412	BOLT *BOLT*	1	-
8	587205101	TRAY *TRAY*	1	-
16	532176138	MICRO SWITCH *MICRO SWITCH*	1	-
21	532400252	HARNESS *HARNESS LIGHT*	1	-
22	532004152	BULB *LIGHT BULB*	1	-
24	585555601	CABLE *CABLE*	1	-
25	585555501	CABLE *CABLE*	1	-
26	532175158	FUSE *FUSE*	1	-
27	596133601	LOCK NUT *LOCK NUT*	1	-
28	532416588	CABLE *CABLE*	1	-
29	532192749	SWITCH *SWITCH*	1	-
30	532193350	IGNITION MODULE *IGNITION MODULE*	1	-
33	532411935	KEY *KEY*	1	-

Ref.	Article N.	Description	Qty	Kit
34	532110712	SWITCH *SWITCH*	1	-
40	501133001	HARNESS *HARNESS*	1	-
41	817720408	SCREW *SCREW*	1	-
42	532131563	COVER *COVER*	1	-
43	582042802	SOLENOID *SOLENOID*	1	-
46	594919101	HOUR METER *HOUR METER*	1	-
55	817060512	SCREW *SCREW*	1	-
71	532194276	CABLE ASSY *CABLE ASSY*	1	-
79	532175242	TOOL HOLDER *SOCKET ASM*	1	-
87	532197802	SWITCH *SWITCH*	1	-
90	532435395	TERMINAL COVER *TERMINAL COVER*	1	-
99	817670412	SCREW *SCREW*	1	-
100	596135301	WASHER *WASHER*	1	-
102	532404454	CABLE *CABLE*	1	-
105	532407568	SWITCH *SWITCH*	1	-
1	900000002	DUMMY PART *DUMMY PART*	1	-
2	589818702	MUFFLER *MUFFLER*	1	-
9	596501502	KEEPER *KEEPER*	1	-
12	586728901	PULLEY *PULLEY*	1	-
15	599306004	FUEL TANK ASSY *FUEL TANK ASSY*	1	-
18	585124801	FUEL CAP ASSY *FUEL CAP ASSY*	1	-
18	529989702	CAP	1	-

Ref.	Article N.	Description	Qty	Kit
		CAP		
20	532423502	CONTROL *THROTTLE*	1	-
21	596321701	SCREW *SCREW*	1	-
28	532401135	LINE *LINE*	1	-
29	532137180	SPARK ARRESTER *SPARK ARRESTER*	1	-
37	532123487	HOSE CLAMP *HOSE CLAMP*	1	-
42	596238901	WASHER *WASHER*	1	-
45	596133601	LOCK NUT *LOCK NUT*	1	-
62	532434017	SHIELD *SHIELD*	1	-
69	532165391	GASKET *GASKET*	1	-
70	581881101	TUBE *TUBE*	1	-
71	581881001	TUBE *TUBE*	1	-
79	596134202	SCREW *SCREW*	1	-
81	532148456	TUBE *TUBE*	1	-
82	532428287	PLUG *PLUG*	1	-
84	817060620	SCREW *SCREW*	1	-
85	501606501	BOLT *BOLT*	1	-
90	817000616	SCREW *SCREW*	1	-
91	532187495	BUSHING *BUSHING*	1	-
102	817000512	SCREW *SCREW*	1	-
1	586352301	SERVICE TOOLS *SERVICE TOOLS*	1	-
2	532405507	COVER *COVER*	1	-

Ref.	Article N.	Description	Qty	Kit
3	532405506	COVER *COVER*	1	-
4	596030501	SCREW *SCREW*	1	-
6	532195186	ARM *ARM*	1	-
7	596321701	SCREW *SCREW*	1	-
11	532405380	RIDE ON BLADE *RIDE ON BLADE*	1	-
12	584309301	SCREW *SCREW*	1	-
14	587819701	MANDREL *MANDREL*	1	-
19	532196539	BOLT *BOLT*	1	-
21	596040501	LOCK NUT *LOCK NUT*	1	-
23	532192557	HINGE *HINGE*	1	-
24	532105304	HUB CAP *HUB CAP*	1	-
25	532197026	TORSION SPRING *TORSION SPRING*	1	-
26	532110452	NUT *NUT*	1	-
27	532405357	DEFLECTOR *DEFLECTOR*	1	-
29	595297001	ROD *ROD*	1	-
32	532197473	PULLEY *PULLEY*	1	-
33	596134801	HEXAGON NUT *HEXAGON NUT*	1	-
34	596136101	BOLT *BOLT*	1	-
36	532197379	PULLEY *PULLEY*	1	-
37	596565301	WASHER *WASHER*	1	-
38	589676102	KEEPER *KEEPER*	1	-
40	873900600	NUT	1	-

Ref.	Article N.	Description	Qty	Kit
		NUT		
41	584953901	BOLT *BOLT*	1	-
42	532198410	SPRING *SPRING*	1	-
43	532197256	SPRING *SPRING*	1	-
46	532137729	SCREW *SCREW*	1	-
47	532197250	BRACKET *BRACKET*	1	-
55	532197249	ARM *ARM*	1	-
56	532199092	SPACER *SPACER*	1	-
57	817000616	SCREW *SCREW*	1	-
59	532141043	GUARD *GUARD*	1	-
60	532199471	ARM *ARM*	1	-
63	532199477	ARM *ARM*	1	-
64	532405139	LINKAGE *LINKAGE*	1	-
65	596039401	BOLT *BOLT*	1	-
67	532403012	HANDLE *HANDLE*	1	-
68	532405143	DRIVE BELT *DRIVE BELT*	1	-
69	596136401	BOLT *BOLT*	1	-
70	532199972	CLUTCH ASSY *CLUTCH ASSY*	1	-
113	817000510	BOLT *BOLT*	1	-
116	596434404	BOLT *BOLT*	1	-
117	589527301	WHEEL *WHEEL*	1	-
119	596134901	WASHER *WASHER*	1	-

Ref.	Article N.	Description	Qty	Kit
122	532197258	BELT GUIDE *BELT GUIDE*	1	-
123	532197259	BELT GUIDE *BELT GUIDE*	1	-
144	532199204	BELT GUIDE *BELT GUIDE*	1	-
145	532193197	PULLEY *PULLEY*	1	-
147	532401872	SPRING *SPRING*	1	-
152	584243501	CABLE *CABLE*	1	-
188	593824001	STUD *STUD*	1	-
189	596135701	LOCK NUT *LOCK NUT*	1	-
195	817000612	SCREW *SCREW*	1	-
197	596133201	WASHER *WASHER*	1	-
198	532403149	PLATE *PLATE*	1	-
199	532403150	PLATE *PLATE*	1	-
200	532413524	WASHER *WASHER*	1	-
240	874520636	BOLT *BOLT*	1	-
241	532137729	SCREW *SCREW*	1	-
242	532415598	HOSE COUPLING *HOSE COUPLING*	1	-
243	532416405	COUPLING *COUPLING*	1	-
2	532422027	SHAFT *SHAFT*	1	-
3	594018001	LEVER *LEVER*	1	-
7	580962301	GRIP *GRIP*	1	-
10	532196314	SPRING *SPRING*	1	-
87	532194209	SPRING	1	-

Ref.	Article N.	Description	Qty	Kit
		SPRING		
88	532410710	SPRING *SPRING*	1	-
89	819191912	WASHER *WASHER*	1	-
90	532194208	PIN *PIN*	1	-
91	589464803	LINK ASSY *LINK ASSY*	1	-
97	817000612	SCREW *SCREW*	1	-
98	581506903	LINK ASSY *LINK ASSY*	1	-
100	595305901	NUT *NUT*	1	-
101	532407003	LINK *LINK*	1	-
116	594976501	WASHER *WASHER*	1	-
1	900000002	DUMMY PART *DUMMY PART*	1	-
1	536178101	SEAT *SEAT*	1	-
2	597329902	BRACKET *BRACKET*	1	-
3	590777602	BRACKET *N/A*	1	-
4	536960901	RETAINER *RETAINER*	1	-
6	521996502	NUT *NUT*	1	-
8	532171877	BOLT *BOLT*	1	-
9	597785101	BUMPER *BUMPER*	1	-
19	597783101	KNOB *KNOB*	1	-
21	596240701	BOLT *BOLT*	1	-
30	597781801	BOLT *BOLT*	1	-
37	594944401	NUT *NUT*	1	-

Ref.	Article N.	Description	Qty	Kit
43	597869301	BOLT *BOLT*	1	-
48	536990401	ARM REST KIT *ARM REST KIT*	1	-
50	598001601	SERVICE KIT *SERVICE KIT*	1	-
1	597866101	SERVICE KIT *SERVICE KIT*	1	-
2	532195968	SHAFT *SHAFT*	1	-
4	596873601	SERVICE KIT *SPINDLE*	1	-
5	538691201	SPINDLE *SPINDLE*	1	-
6	532006266	WASHER *WASHER*	1	-
7	532121748	WASHER *WASHER*	1	-
8	812000029	RETAINER RING *RETAINER RING*	1	-
9	532121232	HUB CAP *HUB CAP*	1	-
13	532121749	WASHER *WASHER*	1	-
14	596238701	WASHER *WASHER*	1	-
15	873540600	NUT *NUT*	1	-
16	587016002	SHAFT *SHAFT*	1	-
19	532194729	PLATE *PLATE*	1	-
21	586840201	ADAPTER *ADAPTER*	1	-
22	585029802	BEARING *BEARING*	1	-
26	594949101	CAP *CAP*	1	-
27	596933401	WASHER *WASHER*	1	-
28	817000612	SCREW *SCREW*	1	-
35	532194732	PLATE	1	-

Ref.	Article N.	Description	Qty	Kit
		PLATE		
45	587016401	WASHER *WASHER*	1	-
50	873900600	NUT *NUT*	1	-
53	532188967	WASHER *WASHER*	1	-
57	532407465	BRACKET *BRACKET*	1	-
58	532194747	BOLT *BOLT*	1	-
59	532194748	WASHER *WASHER*	1	-
60	873971000	NUT *NUT*	1	-
61	597070202	LINKAGE *LINKAGE*	1	-
62	597070302	LINKAGE *LINKAGE*	1	-
63	817000512	SCREW *SCREW*	1	-
64	532199849	SPRING RETAINER *SPRING RETAINER*	1	-
66	871020748	BOLT *BOLT*	1	-
67	532194737	BUSHING *BUSHING*	1	-
68	873900700	NUT *NUT*	1	-
69	532199162	WASHER *WASHER*	1	-
70	585338801	BRACKET *BRACKET*	1	-
75	580683701	PINION *PINION*	1	-
76	580683601	SCREW *SCREW*	1	-
122	532444962	CAP *CAP*	1	-
1	532059192	CAP *CAP*	1	-
2	532065139	NIPPLE *NIPPLE*	1	-

Ref.	Article N.	Description	Qty	Kit
3	547005001	WHEEL RIM *WHEEL RIM*	1	-
4	532059904	HOSE *HOSE*	1	-
5	547005101	TIRE *TIRE*	1	-
6	532000278	NIPPLE *NIPPLE*	1	-
7	532009040	BEARING *BEARING*	1	-
8	532175039	HUB CAP *HUB CAP*	1	-
9	547005301	TIRE *TIRE*	1	-
10	532007152	TUBE *TUBE*	1	-
11	547005201	WHEEL RIM *RIM SPROCKET*	1	-
12	576707201	SEALANT *SEALANT*	1	-
1	581579001	DECAL *DECAL*	1	-
2	531229001	DECAL *DECAL*	1	-
3	548219201	DECAL *DECAL*	1	-
4	584904602	DECAL *DECAL*	1	-
5	548074801	DECAL *DECAL*	1	-
6	599966801	DECAL *DECAL*	1	-
7	581724802	DECAL *DECAL*	1	-
8	532439681	PLATE *PAD*	1	-
9	532439682	PAD *PAD*	1	-

DRIVE

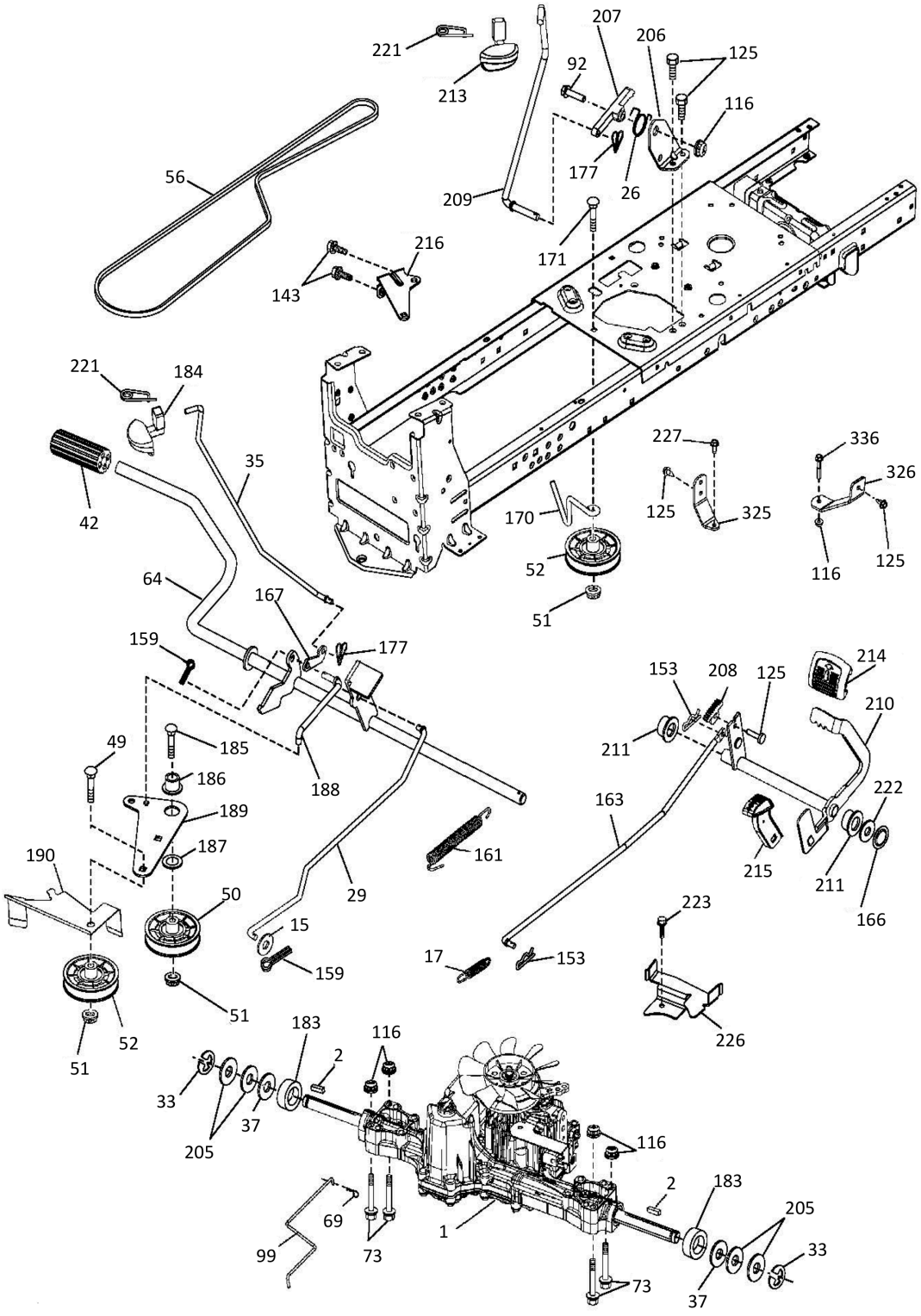

Ref.	Article N.	Description	Qty	Kit
3	597688201	COVER *COVER*	1	-
5	590748818	DASHBOARD *DASHBOARD*	1	-
14	532441177	HOOD *HOOD*	1	-

Ref.	Article N.	Description	Qty	Kit
15	597867801	SERVICE KIT *SERVICE KIT*	1	-
18	597407101	GRILLE *GRILLE*	1	-
34	580910801	CHASSIS *CHASSIS*	1	-
36	817060512	SCREW *SCREW*	1	-
37	532441178	FENDER *FENDER*	1	-
52	596040501	LOCK NUT *LOCK NUT*	1	-
68	596030701	SCREW *SCREW*	1	-
125	581684801	CLIP *CLIP*	1	-
130	596321701	SCREW *SCREW*	1	-
137	532407590	BUMPER *BUMPER*	1	-
146	581857901	BOLT *BOLT*	1	-
150	532439774	AIR DUCT *AIR DUCT*	1	-
151	532436670	BRACKET *BRACKET*	1	-
152	599961102	SHIELD *SHIELD*	1	-
159	817000612	SCREW *SCREW*	1	-
161	532439781	FUEL *FUEL*	1	-
162	596134101	SCREW *SCREW*	1	-
165	532196826	BRACKET *BRACKET*	1	-
175	590607702	CROSS MEMBER *CROSS MEMBER*	1	-
176	532400776	SCREW *SCREW*	1	-
177	532195228	BUSHING *BUSHING*	1	-
180	532195457	CHASSIS	1	-

Ref.	Article N.	Description	Qty	Kit
		CHASSIS		
182	532406859	DASH *DASH*	1	-
183	595305701	SCREW *SCREW*	1	-
189	817000512	SCREW *SCREW*	1	-
194	596135701	LOCK NUT *LOCK NUT*	1	-
195	532404137	PLUG *PLUG*	1	-
199	532413485	PLATE *PLATE*	1	-
202	597867701	SERVICE KIT *SERVICE KIT*	1	-
204	597408001	VENT *VENT*	1	-
205	532439730	TRIM *TRIM*	1	-
206	532439729	TRIM *TRIM*	1	-
213	596030501	SCREW *SCREW*	1	-
214	532199145	CLIP *CLIP*	1	-
217	532409167	ROD *ROD*	1	-
218	532196395	PLATE *PLATE*	1	-
228	593824001	STUD *STUD*	1	-
228	532195161	STUD *STUD*	1	-
235	596564201	SPACER *SPACER*	1	-
236	873930500	NUT *NUT*	1	-
259	596434001	SCREW *SCREW*	1	-
283	532439861	CONSOLE *CONSOLE*	1	-
284	532439823	CONSOLE *CONSOLE*	1	-

Ref.	Article N.	Description	Qty	Kit
285	532416315	CONSOLE *CONSOLE*	1	-
286	532416317	CONSOLE *CONSOLE*	1	-
287	817600406	SCREW *SCREW*	1	-
306	873900600	NUT *NUT*	1	-
335	532448204	COVER *COVER*	1	-
336	532445309	COVER *COVER*	1	-
350	532445143	CLIP *CLIP*	1	-
375	586908201	BUMPER *BUMPER*	1	-
378	590849801	BUSHING *BUSHING*	1	-
379	597334801	BUMPER ASSY *BUMPER ASSY*	1	-
1	900000002	DUMMY PART *DUMMY PART*	1	-
2	532123583	KEY *KEY*	1	-
15	596565301	WASHER *WASHER*	1	-
17	532413678	BRAKE SPRING *BRAKE SPRING*	1	-
26	532199679	SPRING *SPRING*	1	-
29	532403806	ROD *ROD*	1	-
33	812000001	RETAINER RING *RETAINER RING*	1	-
35	590605902	ROD *ROD*	1	-
37	532188967	WASHER *WASHER*	1	-
42	532008883	PEDAL *PEDAL*	1	-
49	596136201	BOLT *BOLT*	1	-
50	532194327	PULLEY	1	-

Ref.	Article N.	Description	Qty	Kit
		PULLEY		
51	873900600	NUT *NUT*	1	-
52	532194326	PULLEY *PULLEY*	1	-
56	592855201	DRIVE BELT *DRIVE BELT*	1	-
64	532197865	SHAFT *SHAFT*	1	-
69	532423303	HAIR PIN COTTER *HAIR PIN COTTER*	1	-
73	596136501	BOLT *BOLT*	1	-
92	595305701	SCREW *SCREW*	1	-
99	582404501	ROD *ROD*	1	-
116	596135701	LOCK NUT *LOCK NUT*	1	-
125	817000512	SCREW *SCREW*	1	-
143	596030701	SCREW *SCREW*	1	-
153	532004497	CLIP *CLIP*	1	-
159	596029501	PIN *PIN*	1	-
161	532105709	SPRING *SPRING*	1	-
163	593861001	ROD *ROD*	1	-
166	532429164	NUT *NUT*	1	-
167	532405257	LATCH *LATCH*	1	-
170	532194322	KEEPER *KEEPER*	1	-
171	596136301	BOLT *BOLT*	1	-
177	587225301	PIN *PIN*	1	-
183	532137057	SPACER *SPACER*	1	-

Ref.	Article N.	Description	Qty	Kit
184	587653701	HANDLE *HANDLE*	1	-
185	872110622	BOLT *BOLT*	1	-
186	532194321	SPACER *SPACER*	1	-
187	596135501	WASHER *WASHER*	1	-
188	582217001	LINK *LINK*	1	-
189	532194317	PLATE *PLATE*	1	-
190	532194318	BELT GUIDE *BELT GUIDE*	1	-
205	532121748	WASHER *WASHER*	1	-
206	532448596	BRACKET *BRACKET*	1	-
207	587031402	LATCH *LATCH*	1	-
208	596564101	GEAR *GEAR*	1	-
209	590527802	ROD *ROD*	1	-
210	532400980	PEDAL ARM *PEDAL ARM*	1	-
211	532120183	BEARING *BEARING*	1	-
213	532403119	CONTROL *CONTROL*	1	-
214	532421263	PAD *PAD*	1	-
215	586606502	PEDAL *PEDAL*	1	-
216	532196131	BRACKET *BRACKET*	1	-
221	532403187	SPRING *SPRING*	1	-
222	879212010	WASHER *WASHER*	1	-
223	598662601	BOLT *BOLT*	1	-
225	532403319	BELT GUIDE	1	-

Ref.	Article N.	Description	Qty	Kit
		BELT GUIDE		
227	596135901	BOLT *BOLT*	1	-
325	585668502	BRACKET *BRACKET*	1	-
326	585670802	BRACKET *BRACKET*	1	-
336	587259602	BOLT *BOLT*	1	-
1	532163465	BATTERY *BATTERY*	1	-
2	874760412	BOLT *BOLT*	1	-
8	587205101	TRAY *TRAY*	1	-
16	532176138	MICRO SWITCH *MICRO SWITCH*	1	-
21	532400252	HARNESS *HARNESS LIGHT*	1	-
22	532004152	BULB *LIGHT BULB*	1	-
24	585555601	CABLE *CABLE*	1	-
25	585555501	CABLE *CABLE*	1	-
26	532175158	FUSE *FUSE*	1	-
27	596133601	LOCK NUT *LOCK NUT*	1	-
28	532416588	CABLE *CABLE*	1	-
29	532192749	SWITCH *SWITCH*	1	-
30	532193350	IGNITION MODULE *IGNITION MODULE*	1	-
33	532411935	KEY *KEY*	1	-
34	532110712	SWITCH *SWITCH*	1	-
40	501133001	HARNESS *HARNESS*	1	-
41	817720408	SCREW *SCREW*	1	-

Ref.	Article N.	Description	Qty	Kit
42	532131563	COVER *COVER*	1	-
43	582042802	SOLENOID *SOLENOID*	1	-
46	594919101	HOUR METER *HOUR METER*	1	-
55	817060512	SCREW *SCREW*	1	-
71	532194276	CABLE ASSY *CABLE ASSY*	1	-
79	532175242	TOOL HOLDER *SOCKET ASM*	1	-
87	532197802	SWITCH *SWITCH*	1	-
90	532435395	TERMINAL COVER *TERMINAL COVER*	1	-
99	817670412	SCREW *SCREW*	1	-
100	596135301	WASHER *WASHER*	1	-
102	532404454	CABLE *CABLE*	1	-
105	532407568	SWITCH *SWITCH*	1	-
1	900000002	DUMMY PART *DUMMY PART*	1	-
2	589818702	MUFFLER *MUFFLER*	1	-
9	596501502	KEEPER *KEEPER*	1	-
12	586728901	PULLEY *PULLEY*	1	-
15	599306004	FUEL TANK ASSY *FUEL TANK ASSY*	1	-
18	585124801	FUEL CAP ASSY *FUEL CAP ASSY*	1	-
18	529989702	CAP *CAP*	1	-
20	532423502	CONTROL *THROTTLE*	1	-
21	596321701	SCREW *SCREW*	1	-
28	532401135	LINE	1	-

Ref.	Article N.	Description	Qty	Kit
		LINE		
29	532137180	SPARK ARRESTER *SPARK ARRESTER*	1	-
37	532123487	HOSE CLAMP *HOSE CLAMP*	1	-
42	596238901	WASHER *WASHER*	1	-
45	596133601	LOCK NUT *LOCK NUT*	1	-
62	532434017	SHIELD *SHIELD*	1	-
69	532165391	GASKET *GASKET*	1	-
70	581881101	TUBE *TUBE*	1	-
71	581881001	TUBE *TUBE*	1	-
79	596134202	SCREW *SCREW*	1	-
81	532148456	TUBE *TUBE*	1	-
82	532428287	PLUG *PLUG*	1	-
84	817060620	SCREW *SCREW*	1	-
85	501606501	BOLT *BOLT*	1	-
90	817000616	SCREW *SCREW*	1	-
91	532187495	BUSHING *BUSHING*	1	-
102	817000512	SCREW *SCREW*	1	-
1	586352301	SERVICE TOOLS *SERVICE TOOLS*	1	-
2	532405507	COVER *COVER*	1	-
3	532405506	COVER *COVER*	1	-
4	596030501	SCREW *SCREW*	1	-
6	532195186	ARM *ARM*	1	-

Ref.	Article N.	Description	Qty	Kit
7	596321701	SCREW *SCREW*	1	-
11	532405380	RIDE ON BLADE *RIDE ON BLADE*	1	-
12	584309301	SCREW *SCREW*	1	-
14	587819701	MANDREL *MANDREL*	1	-
19	532196539	BOLT *BOLT*	1	-
21	596040501	LOCK NUT *LOCK NUT*	1	-
23	532192557	HINGE *HINGE*	1	-
24	532105304	HUB CAP *HUB CAP*	1	-
25	532197026	TORSION SPRING *TORSION SPRING*	1	-
26	532110452	NUT *NUT*	1	-
27	532405357	DEFLECTOR *DEFLECTOR*	1	-
29	595297001	ROD *ROD*	1	-
32	532197473	PULLEY *PULLEY*	1	-
33	596134801	HEXAGON NUT *HEXAGON NUT*	1	-
34	596136101	BOLT *BOLT*	1	-
36	532197379	PULLEY *PULLEY*	1	-
37	596565301	WASHER *WASHER*	1	-
38	589676102	KEEPER *KEEPER*	1	-
40	873900600	NUT *NUT*	1	-
41	584953901	BOLT *BOLT*	1	-
42	532198410	SPRING *SPRING*	1	-
43	532197256	SPRING	1	-

Ref.	Article N.	Description	Qty	Kit
		SPRING		
46	532137729	SCREW *SCREW*	1	-
47	532197250	BRACKET *BRACKET*	1	-
55	532197249	ARM *ARM*	1	-
56	532199092	SPACER *SPACER*	1	-
57	817000616	SCREW *SCREW*	1	-
59	532141043	GUARD *GUARD*	1	-
60	532199471	ARM *ARM*	1	-
63	532199477	ARM *ARM*	1	-
64	532405139	LINKAGE *LINKAGE*	1	-
65	596039401	BOLT *BOLT*	1	-
67	532403012	HANDLE *HANDLE*	1	-
68	532405143	DRIVE BELT *DRIVE BELT*	1	-
69	596136401	BOLT *BOLT*	1	-
70	532199972	CLUTCH ASSY *CLUTCH ASSY*	1	-
113	817000510	BOLT *BOLT*	1	-
116	596434404	BOLT *BOLT*	1	-
117	589527301	WHEEL *WHEEL*	1	-
119	596134901	WASHER *WASHER*	1	-
122	532197258	BELT GUIDE *BELT GUIDE*	1	-
123	532197259	BELT GUIDE *BELT GUIDE*	1	-
144	532199204	BELT GUIDE *BELT GUIDE*	1	-

Ref.	Article N.	Description	Qty	Kit
145	532193197	PULLEY *PULLEY*	1	-
147	532401872	SPRING *SPRING*	1	-
152	584243501	CABLE *CABLE*	1	-
188	593824001	STUD *STUD*	1	-
189	596135701	LOCK NUT *LOCK NUT*	1	-
195	817000612	SCREW *SCREW*	1	-
197	596133201	WASHER *WASHER*	1	-
198	532403149	PLATE *PLATE*	1	-
199	532403150	PLATE *PLATE*	1	-
200	532413524	WASHER *WASHER*	1	-
240	874520636	BOLT *BOLT*	1	-
241	532137729	SCREW *SCREW*	1	-
242	532415598	HOSE COUPLING *HOSE COUPLING*	1	-
243	532416405	COUPLING *COUPLING*	1	-
2	532422027	SHAFT *SHAFT*	1	-
3	594018001	LEVER *LEVER*	1	-
7	580962301	GRIP *GRIP*	1	-
10	532196314	SPRING *SPRING*	1	-
87	532194209	SPRING *SPRING*	1	-
88	532410710	SPRING *SPRING*	1	-
89	819191912	WASHER *WASHER*	1	-
90	532194208	PIN	1	-

Ref.	Article N.	Description	Qty	Kit
		PIN		
91	589464803	LINK ASSY *LINK ASSY*	1	-
97	817000612	SCREW *SCREW*	1	-
98	581506903	LINK ASSY *LINK ASSY*	1	-
100	595305901	NUT *NUT*	1	-
101	532407003	LINK *LINK*	1	-
116	594976501	WASHER *WASHER*	1	-
1	900000002	DUMMY PART *DUMMY PART*	1	-
1	536178101	SEAT *SEAT*	1	-
2	597329902	BRACKET *BRACKET*	1	-
3	590777602	BRACKET *N/A*	1	-
4	536960901	RETAINER *RETAINER*	1	-
6	521996502	NUT *NUT*	1	-
8	532171877	BOLT *BOLT*	1	-
9	597785101	BUMPER *BUMPER*	1	-
19	597783101	KNOB *KNOB*	1	-
21	596240701	BOLT *BOLT*	1	-
30	597781801	BOLT *BOLT*	1	-
37	594944401	NUT *NUT*	1	-
43	597869301	BOLT *BOLT*	1	-
48	536990401	ARM REST KIT *ARM REST KIT*	1	-
50	598001601	SERVICE KIT *SERVICE KIT*	1	-

Ref.	Article N.	Description	Qty	Kit
1	597866101	SERVICE KIT *SERVICE KIT*	1	-
2	532195968	SHAFT *SHAFT*	1	-
4	596873601	SERVICE KIT *SPINDLE*	1	-
5	538691201	SPINDLE *SPINDLE*	1	-
6	532006266	WASHER *WASHER*	1	-
7	532121748	WASHER *WASHER*	1	-
8	812000029	RETAINER RING *RETAINER RING*	1	-
9	532121232	HUB CAP *HUB CAP*	1	-
13	532121749	WASHER *WASHER*	1	-
14	596238701	WASHER *WASHER*	1	-
15	873540600	NUT *NUT*	1	-
16	587016002	SHAFT *SHAFT*	1	-
19	532194729	PLATE *PLATE*	1	-
21	586840201	ADAPTER *ADAPTER*	1	-
22	585029802	BEARING *BEARING*	1	-
26	594949101	CAP *CAP*	1	-
27	596933401	WASHER *WASHER*	1	-
28	817000612	SCREW *SCREW*	1	-
35	532194732	PLATE *PLATE*	1	-
45	587016401	WASHER *WASHER*	1	-
50	873900600	NUT *NUT*	1	-
53	532188967	WASHER	1	-

Ref.	Article N.	Description	Qty	Kit
		WASHER		
57	532407465	BRACKET *BRACKET*	1	-
58	532194747	BOLT *BOLT*	1	-
59	532194748	WASHER *WASHER*	1	-
60	873971000	NUT *NUT*	1	-
61	597070202	LINKAGE *LINKAGE*	1	-
62	597070302	LINKAGE *LINKAGE*	1	-
63	817000512	SCREW *SCREW*	1	-
64	532199849	SPRING RETAINER *SPRING RETAINER*	1	-
66	871020748	BOLT *BOLT*	1	-
67	532194737	BUSHING *BUSHING*	1	-
68	873900700	NUT *NUT*	1	-
69	532199162	WASHER *WASHER*	1	-
70	585338801	BRACKET *BRACKET*	1	-
75	580683701	PINION *PINION*	1	-
76	580683601	SCREW *SCREW*	1	-
122	532444962	CAP *CAP*	1	-
1	532059192	CAP *CAP*	1	-
2	532065139	NIPPLE *NIPPLE*	1	-
3	547005001	WHEEL RIM *WHEEL RIM*	1	-
4	532059904	HOSE *HOSE*	1	-
5	547005101	TIRE *TIRE*	1	-

Ref.	Article N.	Description	Qty	Kit
6	532000278	NIPPLE *NIPPLE*	1	-
7	532009040	BEARING *BEARING*	1	-
8	532175039	HUB CAP *HUB CAP*	1	-
9	547005301	TIRE *TIRE*	1	-
10	532007152	TUBE *TUBE*	1	-
11	547005201	WHEEL RIM *RIM SPROCKET*	1	-
12	576707201	SEALANT *SEALANT*	1	-
1	581579001	DECAL *DECAL*	1	-
2	531229001	DECAL *DECAL*	1	-
3	548219201	DECAL *DECAL*	1	-
4	584904602	DECAL *DECAL*	1	-
5	548074801	DECAL *DECAL*	1	-
6	599966801	DECAL *DECAL*	1	-
7	581724802	DECAL *DECAL*	1	-
8	532439681	PLATE *PAD*	1	-
9	532439682	PAD *PAD*	1	-

ELECTRICAL

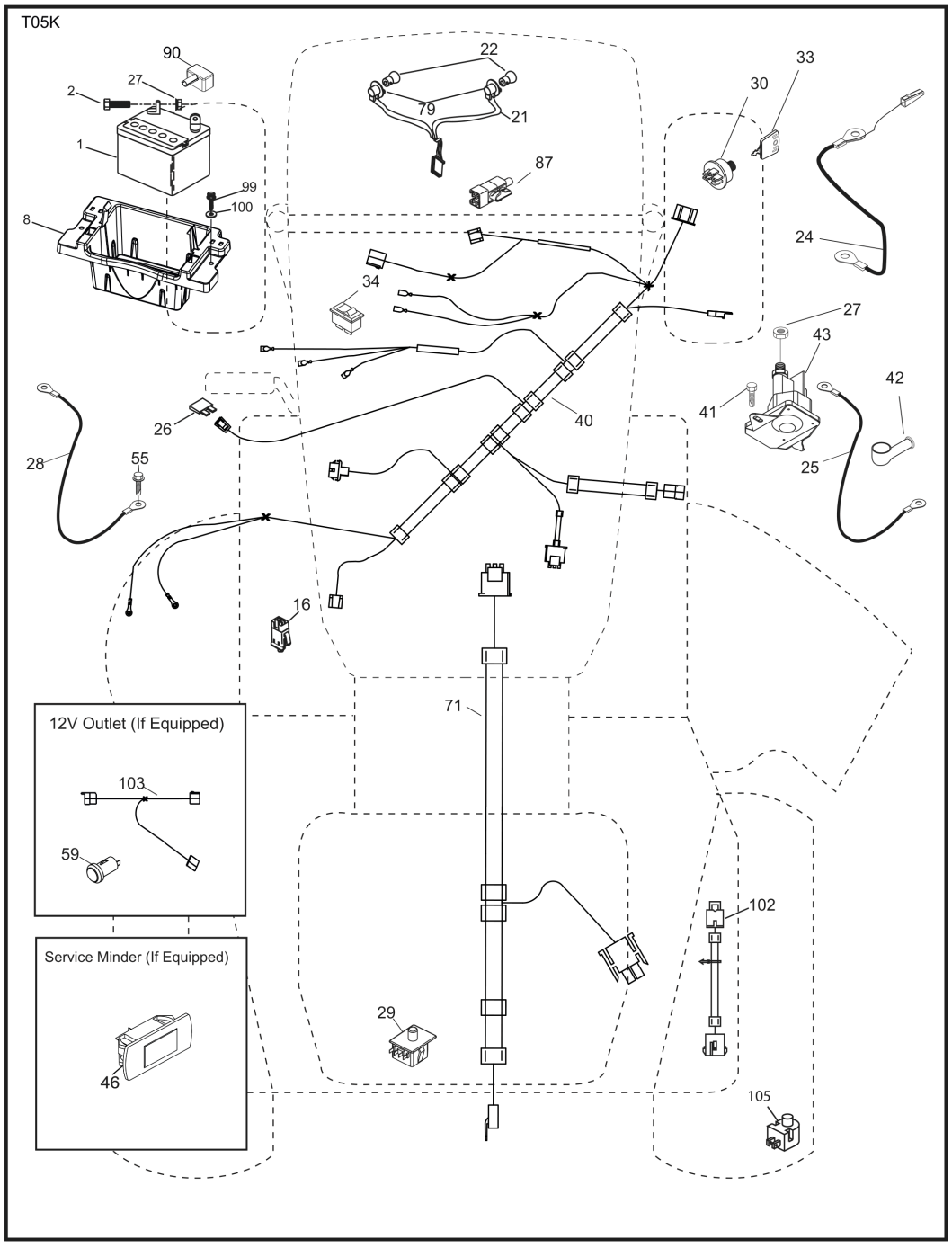

Ref.	Article N.	Description	Qty	Kit
3	597688201	COVER *COVER*	1	-
5	590748818	DASHBOARD *DASHBOARD*	1	-
14	532441177	HOOD *HOOD*	1	-

Ref.	Article N.	Description	Qty	Kit
15	597867801	SERVICE KIT *SERVICE KIT*	1	-
18	597407101	GRILLE *GRILLE*	1	-
34	580910801	CHASSIS *CHASSIS*	1	-
36	817060512	SCREW *SCREW*	1	-
37	532441178	FENDER *FENDER*	1	-
52	596040501	LOCK NUT *LOCK NUT*	1	-
68	596030701	SCREW *SCREW*	1	-
125	581684801	CLIP *CLIP*	1	-
130	596321701	SCREW *SCREW*	1	-
137	532407590	BUMPER *BUMPER*	1	-
146	581857901	BOLT *BOLT*	1	-
150	532439774	AIR DUCT *AIR DUCT*	1	-
151	532436670	BRACKET *BRACKET*	1	-
152	599961102	SHIELD *SHIELD*	1	-
159	817000612	SCREW *SCREW*	1	-
161	532439781	FUEL *FUEL*	1	-
162	596134101	SCREW *SCREW*	1	-
165	532196826	BRACKET *BRACKET*	1	-
175	590607702	CROSS MEMBER *CROSS MEMBER*	1	-
176	532400776	SCREW *SCREW*	1	-
177	532195228	BUSHING *BUSHING*	1	-
180	532195457	CHASSIS	1	-

Ref.	Article N.	Description	Qty	Kit
		CHASSIS		
182	532406859	DASH *DASH*	1	-
183	595305701	SCREW *SCREW*	1	-
189	817000512	SCREW *SCREW*	1	-
194	596135701	LOCK NUT *LOCK NUT*	1	-
195	532404137	PLUG *PLUG*	1	-
199	532413485	PLATE *PLATE*	1	-
202	597867701	SERVICE KIT *SERVICE KIT*	1	-
204	597408001	VENT *VENT*	1	-
205	532439730	TRIM *TRIM*	1	-
206	532439729	TRIM *TRIM*	1	-
213	596030501	SCREW *SCREW*	1	-
214	532199145	CLIP *CLIP*	1	-
217	532409167	ROD *ROD*	1	-
218	532196395	PLATE *PLATE*	1	-
228	593824001	STUD *STUD*	1	-
228	532195161	STUD *STUD*	1	-
235	596564201	SPACER *SPACER*	1	-
236	873930500	NUT *NUT*	1	-
259	596434001	SCREW *SCREW*	1	-
283	532439861	CONSOLE *CONSOLE*	1	-
284	532439823	CONSOLE *CONSOLE*	1	-

Ref.	Article N.	Description	Qty	Kit
285	532416315	CONSOLE *CONSOLE*	1	-
286	532416317	CONSOLE *CONSOLE*	1	-
287	817600406	SCREW *SCREW*	1	-
306	873900600	NUT *NUT*	1	-
335	532448204	COVER *COVER*	1	-
336	532445309	COVER *COVER*	1	-
350	532445143	CLIP *CLIP*	1	-
375	586908201	BUMPER *BUMPER*	1	-
378	590849801	BUSHING *BUSHING*	1	-
379	597334801	BUMPER ASSY *BUMPER ASSY*	1	-
1	900000002	DUMMY PART *DUMMY PART*	1	-
2	532123583	KEY *KEY*	1	-
15	596565301	WASHER *WASHER*	1	-
17	532413678	BRAKE SPRING *BRAKE SPRING*	1	-
26	532199679	SPRING *SPRING*	1	-
29	532403806	ROD *ROD*	1	-
33	812000001	RETAINER RING *RETAINER RING*	1	-
35	590605902	ROD *ROD*	1	-
37	532188967	WASHER *WASHER*	1	-
42	532008883	PEDAL *PEDAL*	1	-
49	596136201	BOLT *BOLT*	1	-
50	532194327	PULLEY	1	-

Ref.	Article N.	Description	Qty	Kit
		PULLEY		
51	873900600	NUT *NUT*	1	-
52	532194326	PULLEY *PULLEY*	1	-
56	592855201	DRIVE BELT *DRIVE BELT*	1	-
64	532197865	SHAFT *SHAFT*	1	-
69	532423303	HAIR PIN COTTER *HAIR PIN COTTER*	1	-
73	596136501	BOLT *BOLT*	1	-
92	595305701	SCREW *SCREW*	1	-
99	582404501	ROD *ROD*	1	-
116	596135701	LOCK NUT *LOCK NUT*	1	-
125	817000512	SCREW *SCREW*	1	-
143	596030701	SCREW *SCREW*	1	-
153	532004497	CLIP *CLIP*	1	-
159	596029501	PIN *PIN*	1	-
161	532105709	SPRING *SPRING*	1	-
163	593861001	ROD *ROD*	1	-
166	532429164	NUT *NUT*	1	-
167	532405257	LATCH *LATCH*	1	-
170	532194322	KEEPER *KEEPER*	1	-
171	596136301	BOLT *BOLT*	1	-
177	587225301	PIN *PIN*	1	-
183	532137057	SPACER *SPACER*	1	-

Ref.	Article N.	Description	Qty	Kit
184	587653701	HANDLE *HANDLE*	1	-
185	872110622	BOLT *BOLT*	1	-
186	532194321	SPACER *SPACER*	1	-
187	596135501	WASHER *WASHER*	1	-
188	582217001	LINK *LINK*	1	-
189	532194317	PLATE *PLATE*	1	-
190	532194318	BELT GUIDE *BELT GUIDE*	1	-
205	532121748	WASHER *WASHER*	1	-
206	532448596	BRACKET *BRACKET*	1	-
207	587031402	LATCH *LATCH*	1	-
208	596564101	GEAR *GEAR*	1	-
209	590527802	ROD *ROD*	1	-
210	532400980	PEDAL ARM *PEDAL ARM*	1	-
211	532120183	BEARING *BEARING*	1	-
213	532403119	CONTROL *CONTROL*	1	-
214	532421263	PAD *PAD*	1	-
215	586606502	PEDAL *PEDAL*	1	-
216	532196131	BRACKET *BRACKET*	1	-
221	532403187	SPRING *SPRING*	1	-
222	879212010	WASHER *WASHER*	1	-
223	598662601	BOLT *BOLT*	1	-
225	532403319	BELT GUIDE	1	-

Ref.	Article N.	Description	Qty	Kit
		BELT GUIDE		
227	596135901	BOLT *BOLT*	1	-
325	585668502	BRACKET *BRACKET*	1	-
326	585670802	BRACKET *BRACKET*	1	-
336	587259602	BOLT *BOLT*	1	-
1	532163465	BATTERY *BATTERY*	1	-
2	874760412	BOLT *BOLT*	1	-
8	587205101	TRAY *TRAY*	1	-
16	532176138	MICRO SWITCH *MICRO SWITCH*	1	-
21	532400252	HARNESS *HARNESS LIGHT*	1	-
22	532004152	BULB *LIGHT BULB*	1	-
24	585555601	CABLE *CABLE*	1	-
25	585555501	CABLE *CABLE*	1	-
26	532175158	FUSE *FUSE*	1	-
27	596133601	LOCK NUT *LOCK NUT*	1	-
28	532416588	CABLE *CABLE*	1	-
29	532192749	SWITCH *SWITCH*	1	-
30	532193350	IGNITION MODULE *IGNITION MODULE*	1	-
33	532411935	KEY *KEY*	1	-
34	532110712	SWITCH *SWITCH*	1	-
40	501133001	HARNESS *HARNESS*	1	-
41	817720408	SCREW *SCREW*	1	-

Ref.	Article N.	Description	Qty	Kit
42	532131563	COVER *COVER*	1	-
43	582042802	SOLENOID *SOLENOID*	1	-
46	594919101	HOUR METER *HOUR METER*	1	-
55	817060512	SCREW *SCREW*	1	-
71	532194276	CABLE ASSY *CABLE ASSY*	1	-
79	532175242	TOOL HOLDER *SOCKET ASM*	1	-
87	532197802	SWITCH *SWITCH*	1	-
90	532435395	TERMINAL COVER *TERMINAL COVER*	1	-
99	817670412	SCREW *SCREW*	1	-
100	596135301	WASHER *WASHER*	1	-
102	532404454	CABLE *CABLE*	1	-
105	532407568	SWITCH *SWITCH*	1	-
1	900000002	DUMMY PART *DUMMY PART*	1	-
2	589818702	MUFFLER *MUFFLER*	1	-
9	596501502	KEEPER *KEEPER*	1	-
12	586728901	PULLEY *PULLEY*	1	-
15	599306004	FUEL TANK ASSY *FUEL TANK ASSY*	1	-
18	585124801	FUEL CAP ASSY *FUEL CAP ASSY*	1	-
18	529989702	CAP *CAP*	1	-
20	532423502	CONTROL *THROTTLE*	1	-
21	596321701	SCREW *SCREW*	1	-
28	532401135	LINE	1	-

Ref.	Article N.	Description	Qty	Kit
		LINE		
29	532137180	SPARK ARRESTER *SPARK ARRESTER*	1	-
37	532123487	HOSE CLAMP *HOSE CLAMP*	1	-
42	596238901	WASHER *WASHER*	1	-
45	596133601	LOCK NUT *LOCK NUT*	1	-
62	532434017	SHIELD *SHIELD*	1	-
69	532165391	GASKET *GASKET*	1	-
70	581881101	TUBE *TUBE*	1	-
71	581881001	TUBE *TUBE*	1	-
79	596134202	SCREW *SCREW*	1	-
81	532148456	TUBE *TUBE*	1	-
82	532428287	PLUG *PLUG*	1	-
84	817060620	SCREW *SCREW*	1	-
85	501606501	BOLT *BOLT*	1	-
90	817000616	SCREW *SCREW*	1	-
91	532187495	BUSHING *BUSHING*	1	-
102	817000512	SCREW *SCREW*	1	-
1	586352301	SERVICE TOOLS *SERVICE TOOLS*	1	-
2	532405507	COVER *COVER*	1	-
3	532405506	COVER *COVER*	1	-
4	596030501	SCREW *SCREW*	1	-
6	532195186	ARM *ARM*	1	-

Ref.	Article N.	Description	Qty	Kit
7	596321701	SCREW *SCREW*	1	-
11	532405380	RIDE ON BLADE *RIDE ON BLADE*	1	-
12	584309301	SCREW *SCREW*	1	-
14	587819701	MANDREL *MANDREL*	1	-
19	532196539	BOLT *BOLT*	1	-
21	596040501	LOCK NUT *LOCK NUT*	1	-
23	532192557	HINGE *HINGE*	1	-
24	532105304	HUB CAP *HUB CAP*	1	-
25	532197026	TORSION SPRING *TORSION SPRING*	1	-
26	532110452	NUT *NUT*	1	-
27	532405357	DEFLECTOR *DEFLECTOR*	1	-
29	595297001	ROD *ROD*	1	-
32	532197473	PULLEY *PULLEY*	1	-
33	596134801	HEXAGON NUT *HEXAGON NUT*	1	-
34	596136101	BOLT *BOLT*	1	-
36	532197379	PULLEY *PULLEY*	1	-
37	596565301	WASHER *WASHER*	1	-
38	589676102	KEEPER *KEEPER*	1	-
40	873900600	NUT *NUT*	1	-
41	584953901	BOLT *BOLT*	1	-
42	532198410	SPRING *SPRING*	1	-
43	532197256	SPRING	1	-

Ref.	Article N.	Description	Qty	Kit
		SPRING		
46	532137729	SCREW *SCREW*	1	-
47	532197250	BRACKET *BRACKET*	1	-
55	532197249	ARM *ARM*	1	-
56	532199092	SPACER *SPACER*	1	-
57	817000616	SCREW *SCREW*	1	-
59	532141043	GUARD *GUARD*	1	-
60	532199471	ARM *ARM*	1	-
63	532199477	ARM *ARM*	1	-
64	532405139	LINKAGE *LINKAGE*	1	-
65	596039401	BOLT *BOLT*	1	-
67	532403012	HANDLE *HANDLE*	1	-
68	532405143	DRIVE BELT *DRIVE BELT*	1	-
69	596136401	BOLT *BOLT*	1	-
70	532199972	CLUTCH ASSY *CLUTCH ASSY*	1	-
113	817000510	BOLT *BOLT*	1	-
116	596434404	BOLT *BOLT*	1	-
117	589527301	WHEEL *WHEEL*	1	-
119	596134901	WASHER *WASHER*	1	-
122	532197258	BELT GUIDE *BELT GUIDE*	1	-
123	532197259	BELT GUIDE *BELT GUIDE*	1	-
144	532199204	BELT GUIDE *BELT GUIDE*	1	-

Ref.	Article N.	Description	Qty	Kit
145	532193197	PULLEY *PULLEY*	1	-
147	532401872	SPRING *SPRING*	1	-
152	584243501	CABLE *CABLE*	1	-
188	593824001	STUD *STUD*	1	-
189	596135701	LOCK NUT *LOCK NUT*	1	-
195	817000612	SCREW *SCREW*	1	-
197	596133201	WASHER *WASHER*	1	-
198	532403149	PLATE *PLATE*	1	-
199	532403150	PLATE *PLATE*	1	-
200	532413524	WASHER *WASHER*	1	-
240	874520636	BOLT *BOLT*	1	-
241	532137729	SCREW *SCREW*	1	-
242	532415598	HOSE COUPLING *HOSE COUPLING*	1	-
243	532416405	COUPLING *COUPLING*	1	-
2	532422027	SHAFT *SHAFT*	1	-
3	594018001	LEVER *LEVER*	1	-
7	580962301	GRIP *GRIP*	1	-
10	532196314	SPRING *SPRING*	1	-
87	532194209	SPRING *SPRING*	1	-
88	532410710	SPRING *SPRING*	1	-
89	819191912	WASHER *WASHER*	1	-
90	532194208	PIN	1	-

Ref.	Article N.	Description	Qty	Kit
		PIN		
91	589464803	LINK ASSY *LINK ASSY*	1	-
97	817000612	SCREW *SCREW*	1	-
98	581506903	LINK ASSY *LINK ASSY*	1	-
100	595305901	NUT *NUT*	1	-
101	532407003	LINK *LINK*	1	-
116	594976501	WASHER *WASHER*	1	-
1	900000002	DUMMY PART *DUMMY PART*	1	-
1	536178101	SEAT *SEAT*	1	-
2	597329902	BRACKET *BRACKET*	1	-
3	590777602	BRACKET *N/A*	1	-
4	536960901	RETAINER *RETAINER*	1	-
6	521996502	NUT *NUT*	1	-
8	532171877	BOLT *BOLT*	1	-
9	597785101	BUMPER *BUMPER*	1	-
19	597783101	KNOB *KNOB*	1	-
21	596240701	BOLT *BOLT*	1	-
30	597781801	BOLT *BOLT*	1	-
37	594944401	NUT *NUT*	1	-
43	597869301	BOLT *BOLT*	1	-
48	536990401	ARM REST KIT *ARM REST KIT*	1	-
50	598001601	SERVICE KIT *SERVICE KIT*	1	-

Ref.	Article N.	Description	Qty	Kit
1	597866101	SERVICE KIT *SERVICE KIT*	1	-
2	532195968	SHAFT *SHAFT*	1	-
4	596873601	SERVICE KIT *SPINDLE*	1	-
5	538691201	SPINDLE *SPINDLE*	1	-
6	532006266	WASHER *WASHER*	1	-
7	532121748	WASHER *WASHER*	1	-
8	812000029	RETAINER RING *RETAINER RING*	1	-
9	532121232	HUB CAP *HUB CAP*	1	-
13	532121749	WASHER *WASHER*	1	-
14	596238701	WASHER *WASHER*	1	-
15	873540600	NUT *NUT*	1	-
16	587016002	SHAFT *SHAFT*	1	-
19	532194729	PLATE *PLATE*	1	-
21	586840201	ADAPTER *ADAPTER*	1	-
22	585029802	BEARING *BEARING*	1	-
26	594949101	CAP *CAP*	1	-
27	596933401	WASHER *WASHER*	1	-
28	817000612	SCREW *SCREW*	1	-
35	532194732	PLATE *PLATE*	1	-
45	587016401	WASHER *WASHER*	1	-
50	873900600	NUT *NUT*	1	-
53	532188967	WASHER	1	-

Ref.	Article N.	Description	Qty	Kit
		WASHER		
57	532407465	BRACKET *BRACKET*	1	-
58	532194747	BOLT *BOLT*	1	-
59	532194748	WASHER *WASHER*	1	-
60	873971000	NUT *NUT*	1	-
61	597070202	LINKAGE *LINKAGE*	1	-
62	597070302	LINKAGE *LINKAGE*	1	-
63	817000512	SCREW *SCREW*	1	-
64	532199849	SPRING RETAINER *SPRING RETAINER*	1	-
66	871020748	BOLT *BOLT*	1	-
67	532194737	BUSHING *BUSHING*	1	-
68	873900700	NUT *NUT*	1	-
69	532199162	WASHER *WASHER*	1	-
70	585338801	BRACKET *BRACKET*	1	-
75	580683701	PINION *PINION*	1	-
76	580683601	SCREW *SCREW*	1	-
122	532444962	CAP *CAP*	1	-
1	532059192	CAP *CAP*	1	-
2	532065139	NIPPLE *NIPPLE*	1	-
3	547005001	WHEEL RIM *WHEEL RIM*	1	-
4	532059904	HOSE *HOSE*	1	-
5	547005101	TIRE *TIRE*	1	-

Ref.	Article N.	Description	Qty	Kit
6	532000278	NIPPLE *NIPPLE*	1	-
7	532009040	BEARING *BEARING*	1	-
8	532175039	HUB CAP *HUB CAP*	1	-
9	547005301	TIRE *TIRE*	1	-
10	532007152	TUBE *TUBE*	1	-
11	547005201	WHEEL RIM *RIM SPROCKET*	1	-
12	576707201	SEALANT *SEALANT*	1	-
1	581579001	DECAL *DECAL*	1	-
2	531229001	DECAL *DECAL*	1	-
3	548219201	DECAL *DECAL*	1	-
4	584904602	DECAL *DECAL*	1	-
5	548074801	DECAL *DECAL*	1	-
6	599966801	DECAL *DECAL*	1	-
7	581724802	DECAL *DECAL*	1	-
8	532439681	PLATE *PAD*	1	-
9	532439682	PAD *PAD*	1	-

ENGINE

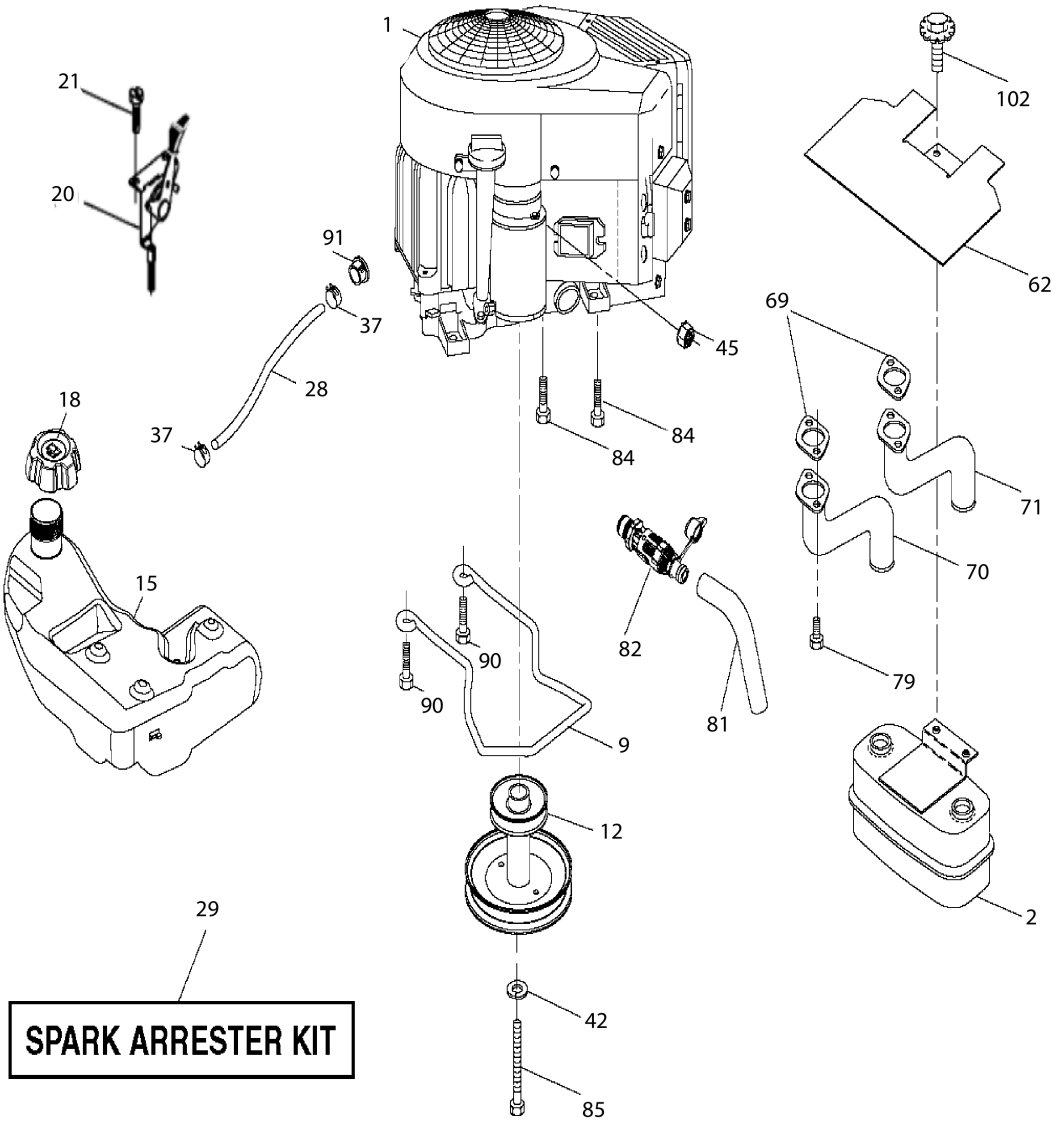

Ref.	Article N.	Description	Qty	Kit
3	597688201	COVER *COVER*	1	-
5	590748818	DASHBOARD *DASHBOARD*	1	-
14	532441177	HOOD *HOOD*	1	-

Ref.	Article N.	Description	Qty	Kit
15	597867801	SERVICE KIT *SERVICE KIT*	1	-
18	597407101	GRILLE *GRILLE*	1	-
34	580910801	CHASSIS *CHASSIS*	1	-
36	817060512	SCREW *SCREW*	1	-
37	532441178	FENDER *FENDER*	1	-
52	596040501	LOCK NUT *LOCK NUT*	1	-
68	596030701	SCREW *SCREW*	1	-
125	581684801	CLIP *CLIP*	1	-
130	596321701	SCREW *SCREW*	1	-
137	532407590	BUMPER *BUMPER*	1	-
146	581857901	BOLT *BOLT*	1	-
150	532439774	AIR DUCT *AIR DUCT*	1	-
151	532436670	BRACKET *BRACKET*	1	-
152	599961102	SHIELD *SHIELD*	1	-
159	817000612	SCREW *SCREW*	1	-
161	532439781	FUEL *FUEL*	1	-
162	596134101	SCREW *SCREW*	1	-
165	532196826	BRACKET *BRACKET*	1	-
175	590607702	CROSS MEMBER *CROSS MEMBER*	1	-
176	532400776	SCREW *SCREW*	1	-
177	532195228	BUSHING *BUSHING*	1	-
180	532195457	CHASSIS	1	-

Ref.	Article N.	Description	Qty	Kit
		CHASSIS		
182	532406859	DASH *DASH*	1	-
183	595305701	SCREW *SCREW*	1	-
189	817000512	SCREW *SCREW*	1	-
194	596135701	LOCK NUT *LOCK NUT*	1	-
195	532404137	PLUG *PLUG*	1	-
199	532413485	PLATE *PLATE*	1	-
202	597867701	SERVICE KIT *SERVICE KIT*	1	-
204	597408001	VENT *VENT*	1	-
205	532439730	TRIM *TRIM*	1	-
206	532439729	TRIM *TRIM*	1	-
213	596030501	SCREW *SCREW*	1	-
214	532199145	CLIP *CLIP*	1	-
217	532409167	ROD *ROD*	1	-
218	532196395	PLATE *PLATE*	1	-
228	593824001	STUD *STUD*	1	-
228	532195161	STUD *STUD*	1	-
235	596564201	SPACER *SPACER*	1	-
236	873930500	NUT *NUT*	1	-
259	596434001	SCREW *SCREW*	1	-
283	532439861	CONSOLE *CONSOLE*	1	-
284	532439823	CONSOLE *CONSOLE*	1	-

Ref.	Article N.	Description	Qty	Kit
285	532416315	CONSOLE *CONSOLE*	1	-
286	532416317	CONSOLE *CONSOLE*	1	-
287	817600406	SCREW *SCREW*	1	-
306	873900600	NUT *NUT*	1	-
335	532448204	COVER *COVER*	1	-
336	532445309	COVER *COVER*	1	-
350	532445143	CLIP *CLIP*	1	-
375	586908201	BUMPER *BUMPER*	1	-
378	590849801	BUSHING *BUSHING*	1	-
379	597334801	BUMPER ASSY *BUMPER ASSY*	1	-
1	900000002	DUMMY PART *DUMMY PART*	1	-
2	532123583	KEY *KEY*	1	-
15	596565301	WASHER *WASHER*	1	-
17	532413678	BRAKE SPRING *BRAKE SPRING*	1	-
26	532199679	SPRING *SPRING*	1	-
29	532403806	ROD *ROD*	1	-
33	812000001	RETAINER RING *RETAINER RING*	1	-
35	590605902	ROD *ROD*	1	-
37	532188967	WASHER *WASHER*	1	-
42	532008883	PEDAL *PEDAL*	1	-
49	596136201	BOLT *BOLT*	1	-
50	532194327	PULLEY	1	-

Ref.	Article N.	Description	Qty	Kit
		PULLEY		
51	873900600	NUT *NUT*	1	-
52	532194326	PULLEY *PULLEY*	1	-
56	592855201	DRIVE BELT *DRIVE BELT*	1	-
64	532197865	SHAFT *SHAFT*	1	-
69	532423303	HAIR PIN COTTER *HAIR PIN COTTER*	1	-
73	596136501	BOLT *BOLT*	1	-
92	595305701	SCREW *SCREW*	1	-
99	582404501	ROD *ROD*	1	-
116	596135701	LOCK NUT *LOCK NUT*	1	-
125	817000512	SCREW *SCREW*	1	-
143	596030701	SCREW *SCREW*	1	-
153	532004497	CLIP *CLIP*	1	-
159	596029501	PIN *PIN*	1	-
161	532105709	SPRING *SPRING*	1	-
163	593861001	ROD *ROD*	1	-
166	532429164	NUT *NUT*	1	-
167	532405257	LATCH *LATCH*	1	-
170	532194322	KEEPER *KEEPER*	1	-
171	596136301	BOLT *BOLT*	1	-
177	587225301	PIN *PIN*	1	-
183	532137057	SPACER *SPACER*	1	-

Ref.	Article N.	Description	Qty	Kit
184	587653701	HANDLE *HANDLE*	1	-
185	872110622	BOLT *BOLT*	1	-
186	532194321	SPACER *SPACER*	1	-
187	596135501	WASHER *WASHER*	1	-
188	582217001	LINK *LINK*	1	-
189	532194317	PLATE *PLATE*	1	-
190	532194318	BELT GUIDE *BELT GUIDE*	1	-
205	532121748	WASHER *WASHER*	1	-
206	532448596	BRACKET *BRACKET*	1	-
207	587031402	LATCH *LATCH*	1	-
208	596564101	GEAR *GEAR*	1	-
209	590527802	ROD *ROD*	1	-
210	532400980	PEDAL ARM *PEDAL ARM*	1	-
211	532120183	BEARING *BEARING*	1	-
213	532403119	CONTROL *CONTROL*	1	-
214	532421263	PAD *PAD*	1	-
215	586606502	PEDAL *PEDAL*	1	-
216	532196131	BRACKET *BRACKET*	1	-
221	532403187	SPRING *SPRING*	1	-
222	879212010	WASHER *WASHER*	1	-
223	598662601	BOLT *BOLT*	1	-
225	532403319	BELT GUIDE	1	-

Ref.	Article N.	Description	Qty	Kit
		BELT GUIDE		
227	596135901	BOLT *BOLT*	1	-
325	585668502	BRACKET *BRACKET*	1	-
326	585670802	BRACKET *BRACKET*	1	-
336	587259602	BOLT *BOLT*	1	-
1	532163465	BATTERY *BATTERY*	1	-
2	874760412	BOLT *BOLT*	1	-
8	587205101	TRAY *TRAY*	1	-
16	532176138	MICRO SWITCH *MICRO SWITCH*	1	-
21	532400252	HARNESS *HARNESS LIGHT*	1	-
22	532004152	BULB *LIGHT BULB*	1	-
24	585555601	CABLE *CABLE*	1	-
25	585555501	CABLE *CABLE*	1	-
26	532175158	FUSE *FUSE*	1	-
27	596133601	LOCK NUT *LOCK NUT*	1	-
28	532416588	CABLE *CABLE*	1	-
29	532192749	SWITCH *SWITCH*	1	-
30	532193350	IGNITION MODULE *IGNITION MODULE*	1	-
33	532411935	KEY *KEY*	1	-
34	532110712	SWITCH *SWITCH*	1	-
40	501133001	HARNESS *HARNESS*	1	-
41	817720408	SCREW *SCREW*	1	-

Ref.	Article N.	Description	Qty	Kit
42	532131563	COVER *COVER*	1	-
43	582042802	SOLENOID *SOLENOID*	1	-
46	594919101	HOUR METER *HOUR METER*	1	-
55	817060512	SCREW *SCREW*	1	-
71	532194276	CABLE ASSY *CABLE ASSY*	1	-
79	532175242	TOOL HOLDER *SOCKET ASM*	1	-
87	532197802	SWITCH *SWITCH*	1	-
90	532435395	TERMINAL COVER *TERMINAL COVER*	1	-
99	817670412	SCREW *SCREW*	1	-
100	596135301	WASHER *WASHER*	1	-
102	532404454	CABLE *CABLE*	1	-
105	532407568	SWITCH *SWITCH*	1	-
1	900000002	DUMMY PART *DUMMY PART*	1	-
2	589818702	MUFFLER *MUFFLER*	1	-
9	596501502	KEEPER *KEEPER*	1	-
12	586728901	PULLEY *PULLEY*	1	-
15	599306004	FUEL TANK ASSY *FUEL TANK ASSY*	1	-
18	585124801	FUEL CAP ASSY *FUEL CAP ASSY*	1	-
18	529989702	CAP *CAP*	1	-
20	532423502	CONTROL *THROTTLE*	1	-
21	596321701	SCREW *SCREW*	1	-
28	532401135	LINE	1	-

Ref.	Article N.	Description	Qty	Kit
		LINE		
29	532137180	SPARK ARRESTER *SPARK ARRESTER*	1	-
37	532123487	HOSE CLAMP *HOSE CLAMP*	1	-
42	596238901	WASHER *WASHER*	1	-
45	596133601	LOCK NUT *LOCK NUT*	1	-
62	532434017	SHIELD *SHIELD*	1	-
69	532165391	GASKET *GASKET*	1	-
70	581881101	TUBE *TUBE*	1	-
71	581881001	TUBE *TUBE*	1	-
79	596134202	SCREW *SCREW*	1	-
81	532148456	TUBE *TUBE*	1	-
82	532428287	PLUG *PLUG*	1	-
84	817060620	SCREW *SCREW*	1	-
85	501606501	BOLT *BOLT*	1	-
90	817000616	SCREW *SCREW*	1	-
91	532187495	BUSHING *BUSHING*	1	-
102	817000512	SCREW *SCREW*	1	-
1	586352301	SERVICE TOOLS *SERVICE TOOLS*	1	-
2	532405507	COVER *COVER*	1	-
3	532405506	COVER *COVER*	1	-
4	596030501	SCREW *SCREW*	1	-
6	532195186	ARM *ARM*	1	-

Ref.	Article N.	Description	Qty	Kit
7	596321701	SCREW *SCREW*	1	-
11	532405380	RIDE ON BLADE *RIDE ON BLADE*	1	-
12	584309301	SCREW *SCREW*	1	-
14	587819701	MANDREL *MANDREL*	1	-
19	532196539	BOLT *BOLT*	1	-
21	596040501	LOCK NUT *LOCK NUT*	1	-
23	532192557	HINGE *HINGE*	1	-
24	532105304	HUB CAP *HUB CAP*	1	-
25	532197026	TORSION SPRING *TORSION SPRING*	1	-
26	532110452	NUT *NUT*	1	-
27	532405357	DEFLECTOR *DEFLECTOR*	1	-
29	595297001	ROD *ROD*	1	-
32	532197473	PULLEY *PULLEY*	1	-
33	596134801	HEXAGON NUT *HEXAGON NUT*	1	-
34	596136101	BOLT *BOLT*	1	-
36	532197379	PULLEY *PULLEY*	1	-
37	596565301	WASHER *WASHER*	1	-
38	589676102	KEEPER *KEEPER*	1	-
40	873900600	NUT *NUT*	1	-
41	584953901	BOLT *BOLT*	1	-
42	532198410	SPRING *SPRING*	1	-
43	532197256	SPRING	1	-

Ref.	Article N.	Description	Qty	Kit
		SPRING		
46	532137729	SCREW *SCREW*	1	-
47	532197250	BRACKET *BRACKET*	1	-
55	532197249	ARM *ARM*	1	-
56	532199092	SPACER *SPACER*	1	-
57	817000616	SCREW *SCREW*	1	-
59	532141043	GUARD *GUARD*	1	-
60	532199471	ARM *ARM*	1	-
63	532199477	ARM *ARM*	1	-
64	532405139	LINKAGE *LINKAGE*	1	-
65	596039401	BOLT *BOLT*	1	-
67	532403012	HANDLE *HANDLE*	1	-
68	532405143	DRIVE BELT *DRIVE BELT*	1	-
69	596136401	BOLT *BOLT*	1	-
70	532199972	CLUTCH ASSY *CLUTCH ASSY*	1	-
113	817000510	BOLT *BOLT*	1	-
116	596434404	BOLT *BOLT*	1	-
117	589527301	WHEEL *WHEEL*	1	-
119	596134901	WASHER *WASHER*	1	-
122	532197258	BELT GUIDE *BELT GUIDE*	1	-
123	532197259	BELT GUIDE *BELT GUIDE*	1	-
144	532199204	BELT GUIDE *BELT GUIDE*	1	-

Ref.	Article N.	Description	Qty	Kit
145	532193197	PULLEY *PULLEY*	1	-
147	532401872	SPRING *SPRING*	1	-
152	584243501	CABLE *CABLE*	1	-
188	593824001	STUD *STUD*	1	-
189	596135701	LOCK NUT *LOCK NUT*	1	-
195	817000612	SCREW *SCREW*	1	-
197	596133201	WASHER *WASHER*	1	-
198	532403149	PLATE *PLATE*	1	-
199	532403150	PLATE *PLATE*	1	-
200	532413524	WASHER *WASHER*	1	-
240	874520636	BOLT *BOLT*	1	-
241	532137729	SCREW *SCREW*	1	-
242	532415598	HOSE COUPLING *HOSE COUPLING*	1	-
243	532416405	COUPLING *COUPLING*	1	-
2	532422027	SHAFT *SHAFT*	1	-
3	594018001	LEVER *LEVER*	1	-
7	580962301	GRIP *GRIP*	1	-
10	532196314	SPRING *SPRING*	1	-
87	532194209	SPRING *SPRING*	1	-
88	532410710	SPRING *SPRING*	1	-
89	819191912	WASHER *WASHER*	1	-
90	532194208	PIN	1	-

Ref.	Article N.	Description	Qty	Kit
		PIN		
91	589464803	LINK ASSY *LINK ASSY*	1	-
97	817000612	SCREW *SCREW*	1	-
98	581506903	LINK ASSY *LINK ASSY*	1	-
100	595305901	NUT *NUT*	1	-
101	532407003	LINK *LINK*	1	-
116	594976501	WASHER *WASHER*	1	-
1	900000002	DUMMY PART *DUMMY PART*	1	-
1	536178101	SEAT *SEAT*	1	-
2	597329902	BRACKET *BRACKET*	1	-
3	590777602	BRACKET *N/A*	1	-
4	536960901	RETAINER *RETAINER*	1	-
6	521996502	NUT *NUT*	1	-
8	532171877	BOLT *BOLT*	1	-
9	597785101	BUMPER *BUMPER*	1	-
19	597783101	KNOB *KNOB*	1	-
21	596240701	BOLT *BOLT*	1	-
30	597781801	BOLT *BOLT*	1	-
37	594944401	NUT *NUT*	1	-
43	597869301	BOLT *BOLT*	1	-
48	536990401	ARM REST KIT *ARM REST KIT*	1	-
50	598001601	SERVICE KIT *SERVICE KIT*	1	-

Ref.	Article N.	Description	Qty	Kit
1	597866101	SERVICE KIT *SERVICE KIT*	1	-
2	532195968	SHAFT *SHAFT*	1	-
4	596873601	SERVICE KIT *SPINDLE*	1	-
5	538691201	SPINDLE *SPINDLE*	1	-
6	532006266	WASHER *WASHER*	1	-
7	532121748	WASHER *WASHER*	1	-
8	812000029	RETAINER RING *RETAINER RING*	1	-
9	532121232	HUB CAP *HUB CAP*	1	-
13	532121749	WASHER *WASHER*	1	-
14	596238701	WASHER *WASHER*	1	-
15	873540600	NUT *NUT*	1	-
16	587016002	SHAFT *SHAFT*	1	-
19	532194729	PLATE *PLATE*	1	-
21	586840201	ADAPTER *ADAPTER*	1	-
22	585029802	BEARING *BEARING*	1	-
26	594949101	CAP *CAP*	1	-
27	596933401	WASHER *WASHER*	1	-
28	817000612	SCREW *SCREW*	1	-
35	532194732	PLATE *PLATE*	1	-
45	587016401	WASHER *WASHER*	1	-
50	873900600	NUT *NUT*	1	-
53	532188967	WASHER	1	-

Ref.	Article N.	Description	Qty	Kit
		WASHER		
57	532407465	BRACKET *BRACKET*	1	-
58	532194747	BOLT *BOLT*	1	-
59	532194748	WASHER *WASHER*	1	-
60	873971000	NUT *NUT*	1	-
61	597070202	LINKAGE *LINKAGE*	1	-
62	597070302	LINKAGE *LINKAGE*	1	-
63	817000512	SCREW *SCREW*	1	-
64	532199849	SPRING RETAINER *SPRING RETAINER*	1	-
66	871020748	BOLT *BOLT*	1	-
67	532194737	BUSHING *BUSHING*	1	-
68	873900700	NUT *NUT*	1	-
69	532199162	WASHER *WASHER*	1	-
70	585338801	BRACKET *BRACKET*	1	-
75	580683701	PINION *PINION*	1	-
76	580683601	SCREW *SCREW*	1	-
122	532444962	CAP *CAP*	1	-
1	532059192	CAP *CAP*	1	-
2	532065139	NIPPLE *NIPPLE*	1	-
3	547005001	WHEEL RIM *WHEEL RIM*	1	-
4	532059904	HOSE *HOSE*	1	-
5	547005101	TIRE *TIRE*	1	-

Ref.	Article N.	Description	Qty	Kit
6	532000278	NIPPLE *NIPPLE*	1	-
7	532009040	BEARING *BEARING*	1	-
8	532175039	HUB CAP *HUB CAP*	1	-
9	547005301	TIRE *TIRE*	1	-
10	532007152	TUBE *TUBE*	1	-
11	547005201	WHEEL RIM *RIM SPROCKET*	1	-
12	576707201	SEALANT *SEALANT*	1	-
1	581579001	DECAL *DECAL*	1	-
2	531229001	DECAL *DECAL*	1	-
3	548219201	DECAL *DECAL*	1	-
4	584904602	DECAL *DECAL*	1	-
5	548074801	DECAL *DECAL*	1	-
6	599966801	DECAL *DECAL*	1	-
7	581724802	DECAL *DECAL*	1	-
8	532439681	PLATE *PAD*	1	-
9	532439682	PAD *PAD*	1	-

MOWER DECK \/ CUTTING DECK

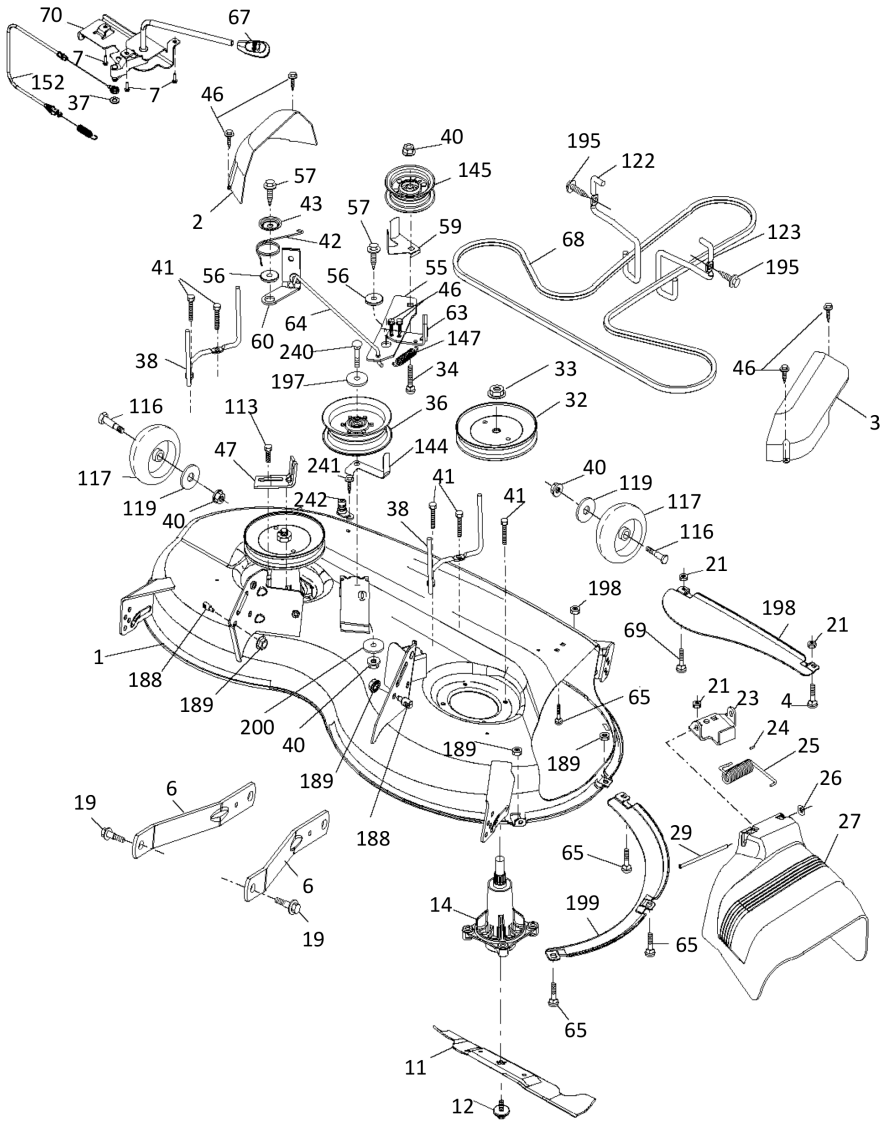

Ref.	Article N.	Description	Qty	Kit
3	597688201	COVER *COVER*	1	-
5	590748818	DASHBOARD *DASHBOARD*	1	-
14	532441177	HOOD *HOOD*	1	-

Ref.	Article N.	Description	Qty	Kit
15	597867801	SERVICE KIT *SERVICE KIT*	1	-
18	597407101	GRILLE *GRILLE*	1	-
34	580910801	CHASSIS *CHASSIS*	1	-
36	817060512	SCREW *SCREW*	1	-
37	532441178	FENDER *FENDER*	1	-
52	596040501	LOCK NUT *LOCK NUT*	1	-
68	596030701	SCREW *SCREW*	1	-
125	581684801	CLIP *CLIP*	1	-
130	596321701	SCREW *SCREW*	1	-
137	532407590	BUMPER *BUMPER*	1	-
146	581857901	BOLT *BOLT*	1	-
150	532439774	AIR DUCT *AIR DUCT*	1	-
151	532436670	BRACKET *BRACKET*	1	-
152	599961102	SHIELD *SHIELD*	1	-
159	817000612	SCREW *SCREW*	1	-
161	532439781	FUEL *FUEL*	1	-
162	596134101	SCREW *SCREW*	1	-
165	532196826	BRACKET *BRACKET*	1	-
175	590607702	CROSS MEMBER *CROSS MEMBER*	1	-
176	532400776	SCREW *SCREW*	1	-
177	532195228	BUSHING *BUSHING*	1	-
180	532195457	CHASSIS	1	-

Ref.	Article N.	Description	Qty	Kit
		CHASSIS		
182	532406859	DASH *DASH*	1	-
183	595305701	SCREW *SCREW*	1	-
189	817000512	SCREW *SCREW*	1	-
194	596135701	LOCK NUT *LOCK NUT*	1	-
195	532404137	PLUG *PLUG*	1	-
199	532413485	PLATE *PLATE*	1	-
202	597867701	SERVICE KIT *SERVICE KIT*	1	-
204	597408001	VENT *VENT*	1	-
205	532439730	TRIM *TRIM*	1	-
206	532439729	TRIM *TRIM*	1	-
213	596030501	SCREW *SCREW*	1	-
214	532199145	CLIP *CLIP*	1	-
217	532409167	ROD *ROD*	1	-
218	532196395	PLATE *PLATE*	1	-
228	593824001	STUD *STUD*	1	-
228	532195161	STUD *STUD*	1	-
235	596564201	SPACER *SPACER*	1	-
236	873930500	NUT *NUT*	1	-
259	596434001	SCREW *SCREW*	1	-
283	532439861	CONSOLE *CONSOLE*	1	-
284	532439823	CONSOLE *CONSOLE*	1	-

Ref.	Article N.	Description	Qty	Kit
285	532416315	CONSOLE *CONSOLE*	1	-
286	532416317	CONSOLE *CONSOLE*	1	-
287	817600406	SCREW *SCREW*	1	-
306	873900600	NUT *NUT*	1	-
335	532448204	COVER *COVER*	1	-
336	532445309	COVER *COVER*	1	-
350	532445143	CLIP *CLIP*	1	-
375	586908201	BUMPER *BUMPER*	1	-
378	590849801	BUSHING *BUSHING*	1	-
379	597334801	BUMPER ASSY *BUMPER ASSY*	1	-
1	900000002	DUMMY PART *DUMMY PART*	1	-
2	532123583	KEY *KEY*	1	-
15	596565301	WASHER *WASHER*	1	-
17	532413678	BRAKE SPRING *BRAKE SPRING*	1	-
26	532199679	SPRING *SPRING*	1	-
29	532403806	ROD *ROD*	1	-
33	812000001	RETAINER RING *RETAINER RING*	1	-
35	590605902	ROD *ROD*	1	-
37	532188967	WASHER *WASHER*	1	-
42	532008883	PEDAL *PEDAL*	1	-
49	596136201	BOLT *BOLT*	1	-
50	532194327	PULLEY	1	-

Ref.	Article N.	Description	Qty	Kit
		PULLEY		
51	873900600	NUT *NUT*	1	-
52	532194326	PULLEY *PULLEY*	1	-
56	592855201	DRIVE BELT *DRIVE BELT*	1	-
64	532197865	SHAFT *SHAFT*	1	-
69	532423303	HAIR PIN COTTER *HAIR PIN COTTER*	1	-
73	596136501	BOLT *BOLT*	1	-
92	595305701	SCREW *SCREW*	1	-
99	582404501	ROD *ROD*	1	-
116	596135701	LOCK NUT *LOCK NUT*	1	-
125	817000512	SCREW *SCREW*	1	-
143	596030701	SCREW *SCREW*	1	-
153	532004497	CLIP *CLIP*	1	-
159	596029501	PIN *PIN*	1	-
161	532105709	SPRING *SPRING*	1	-
163	593861001	ROD *ROD*	1	-
166	532429164	NUT *NUT*	1	-
167	532405257	LATCH *LATCH*	1	-
170	532194322	KEEPER *KEEPER*	1	-
171	596136301	BOLT *BOLT*	1	-
177	587225301	PIN *PIN*	1	-
183	532137057	SPACER *SPACER*	1	-

Ref.	Article N.	Description	Qty	Kit
184	587653701	HANDLE *HANDLE*	1	-
185	872110622	BOLT *BOLT*	1	-
186	532194321	SPACER *SPACER*	1	-
187	596135501	WASHER *WASHER*	1	-
188	582217001	LINK *LINK*	1	-
189	532194317	PLATE *PLATE*	1	-
190	532194318	BELT GUIDE *BELT GUIDE*	1	-
205	532121748	WASHER *WASHER*	1	-
206	532448596	BRACKET *BRACKET*	1	-
207	587031402	LATCH *LATCH*	1	-
208	596564101	GEAR *GEAR*	1	-
209	590527802	ROD *ROD*	1	-
210	532400980	PEDAL ARM *PEDAL ARM*	1	-
211	532120183	BEARING *BEARING*	1	-
213	532403119	CONTROL *CONTROL*	1	-
214	532421263	PAD *PAD*	1	-
215	586606502	PEDAL *PEDAL*	1	-
216	532196131	BRACKET *BRACKET*	1	-
221	532403187	SPRING *SPRING*	1	-
222	879212010	WASHER *WASHER*	1	-
223	598662601	BOLT *BOLT*	1	-
225	532403319	BELT GUIDE	1	-

Ref.	Article N.	Description	Qty	Kit
		BELT GUIDE		
227	596135901	BOLT *BOLT*	1	-
325	585668502	BRACKET *BRACKET*	1	-
326	585670802	BRACKET *BRACKET*	1	-
336	587259602	BOLT *BOLT*	1	-
1	532163465	BATTERY *BATTERY*	1	-
2	874760412	BOLT *BOLT*	1	-
8	587205101	TRAY *TRAY*	1	-
16	532176138	MICRO SWITCH *MICRO SWITCH*	1	-
21	532400252	HARNESS *HARNESS LIGHT*	1	-
22	532004152	BULB *LIGHT BULB*	1	-
24	585555601	CABLE *CABLE*	1	-
25	585555501	CABLE *CABLE*	1	-
26	532175158	FUSE *FUSE*	1	-
27	596133601	LOCK NUT *LOCK NUT*	1	-
28	532416588	CABLE *CABLE*	1	-
29	532192749	SWITCH *SWITCH*	1	-
30	532193350	IGNITION MODULE *IGNITION MODULE*	1	-
33	532411935	KEY *KEY*	1	-
34	532110712	SWITCH *SWITCH*	1	-
40	501133001	HARNESS *HARNESS*	1	-
41	817720408	SCREW *SCREW*	1	-

Ref.	Article N.	Description	Qty	Kit
42	532131563	COVER *COVER*	1	-
43	582042802	SOLENOID *SOLENOID*	1	-
46	594919101	HOUR METER *HOUR METER*	1	-
55	817060512	SCREW *SCREW*	1	-
71	532194276	CABLE ASSY *CABLE ASSY*	1	-
79	532175242	TOOL HOLDER *SOCKET ASM*	1	-
87	532197802	SWITCH *SWITCH*	1	-
90	532435395	TERMINAL COVER *TERMINAL COVER*	1	-
99	817670412	SCREW *SCREW*	1	-
100	596135301	WASHER *WASHER*	1	-
102	532404454	CABLE *CABLE*	1	-
105	532407568	SWITCH *SWITCH*	1	-
1	900000002	DUMMY PART *DUMMY PART*	1	-
2	589818702	MUFFLER *MUFFLER*	1	-
9	596501502	KEEPER *KEEPER*	1	-
12	586728901	PULLEY *PULLEY*	1	-
15	599306004	FUEL TANK ASSY *FUEL TANK ASSY*	1	-
18	585124801	FUEL CAP ASSY *FUEL CAP ASSY*	1	-
18	529989702	CAP *CAP*	1	-
20	532423502	CONTROL *THROTTLE*	1	-
21	596321701	SCREW *SCREW*	1	-
28	532401135	LINE	1	-

Ref.	Article N.	Description	Qty	Kit
		LINE		
29	532137180	SPARK ARRESTER *SPARK ARRESTER*	1	-
37	532123487	HOSE CLAMP *HOSE CLAMP*	1	-
42	596238901	WASHER *WASHER*	1	-
45	596133601	LOCK NUT *LOCK NUT*	1	-
62	532434017	SHIELD *SHIELD*	1	-
69	532165391	GASKET *GASKET*	1	-
70	581881101	TUBE *TUBE*	1	-
71	581881001	TUBE *TUBE*	1	-
79	596134202	SCREW *SCREW*	1	-
81	532148456	TUBE *TUBE*	1	-
82	532428287	PLUG *PLUG*	1	-
84	817060620	SCREW *SCREW*	1	-
85	501606501	BOLT *BOLT*	1	-
90	817000616	SCREW *SCREW*	1	-
91	532187495	BUSHING *BUSHING*	1	-
102	817000512	SCREW *SCREW*	1	-
1	586352301	SERVICE TOOLS *SERVICE TOOLS*	1	-
2	532405507	COVER *COVER*	1	-
3	532405506	COVER *COVER*	1	-
4	596030501	SCREW *SCREW*	1	-
6	532195186	ARM *ARM*	1	-

Ref.	Article N.	Description	Qty	Kit
7	596321701	SCREW *SCREW*	1	-
11	532405380	RIDE ON BLADE *RIDE ON BLADE*	1	-
12	584309301	SCREW *SCREW*	1	-
14	587819701	MANDREL *MANDREL*	1	-
19	532196539	BOLT *BOLT*	1	-
21	596040501	LOCK NUT *LOCK NUT*	1	-
23	532192557	HINGE *HINGE*	1	-
24	532105304	HUB CAP *HUB CAP*	1	-
25	532197026	TORSION SPRING *TORSION SPRING*	1	-
26	532110452	NUT *NUT*	1	-
27	532405357	DEFLECTOR *DEFLECTOR*	1	-
29	595297001	ROD *ROD*	1	-
32	532197473	PULLEY *PULLEY*	1	-
33	596134801	HEXAGON NUT *HEXAGON NUT*	1	-
34	596136101	BOLT *BOLT*	1	-
36	532197379	PULLEY *PULLEY*	1	-
37	596565301	WASHER *WASHER*	1	-
38	589676102	KEEPER *KEEPER*	1	-
40	873900600	NUT *NUT*	1	-
41	584953901	BOLT *BOLT*	1	-
42	532198410	SPRING *SPRING*	1	-
43	532197256	SPRING	1	-

Ref.	Article N.	Description	Qty	Kit
		SPRING		
46	532137729	SCREW *SCREW*	1	-
47	532197250	BRACKET *BRACKET*	1	-
55	532197249	ARM *ARM*	1	-
56	532199092	SPACER *SPACER*	1	-
57	817000616	SCREW *SCREW*	1	-
59	532141043	GUARD *GUARD*	1	-
60	532199471	ARM *ARM*	1	-
63	532199477	ARM *ARM*	1	-
64	532405139	LINKAGE *LINKAGE*	1	-
65	596039401	BOLT *BOLT*	1	-
67	532403012	HANDLE *HANDLE*	1	-
68	532405143	DRIVE BELT *DRIVE BELT*	1	-
69	596136401	BOLT *BOLT*	1	-
70	532199972	CLUTCH ASSY *CLUTCH ASSY*	1	-
113	817000510	BOLT *BOLT*	1	-
116	596434404	BOLT *BOLT*	1	-
117	589527301	WHEEL *WHEEL*	1	-
119	596134901	WASHER *WASHER*	1	-
122	532197258	BELT GUIDE *BELT GUIDE*	1	-
123	532197259	BELT GUIDE *BELT GUIDE*	1	-
144	532199204	BELT GUIDE *BELT GUIDE*	1	-

Ref.	Article N.	Description	Qty	Kit
145	532193197	PULLEY *PULLEY*	1	-
147	532401872	SPRING *SPRING*	1	-
152	584243501	CABLE *CABLE*	1	-
188	593824001	STUD *STUD*	1	-
189	596135701	LOCK NUT *LOCK NUT*	1	-
195	817000612	SCREW *SCREW*	1	-
197	596133201	WASHER *WASHER*	1	-
198	532403149	PLATE *PLATE*	1	-
199	532403150	PLATE *PLATE*	1	-
200	532413524	WASHER *WASHER*	1	-
240	874520636	BOLT *BOLT*	1	-
241	532137729	SCREW *SCREW*	1	-
242	532415598	HOSE COUPLING *HOSE COUPLING*	1	-
243	532416405	COUPLING *COUPLING*	1	-
2	532422027	SHAFT *SHAFT*	1	-
3	594018001	LEVER *LEVER*	1	-
7	580962301	GRIP *GRIP*	1	-
10	532196314	SPRING *SPRING*	1	-
87	532194209	SPRING *SPRING*	1	-
88	532410710	SPRING *SPRING*	1	-
89	819191912	WASHER *WASHER*	1	-
90	532194208	PIN	1	-

Ref.	Article N.	Description	Qty	Kit
		PIN		
91	589464803	LINK ASSY *LINK ASSY*	1	-
97	817000612	SCREW *SCREW*	1	-
98	581506903	LINK ASSY *LINK ASSY*	1	-
100	595305901	NUT *NUT*	1	-
101	532407003	LINK *LINK*	1	-
116	594976501	WASHER *WASHER*	1	-
1	900000002	DUMMY PART *DUMMY PART*	1	-
1	536178101	SEAT *SEAT*	1	-
2	597329902	BRACKET *BRACKET*	1	-
3	590777602	BRACKET *N/A*	1	-
4	536960901	RETAINER *RETAINER*	1	-
6	521996502	NUT *NUT*	1	-
8	532171877	BOLT *BOLT*	1	-
9	597785101	BUMPER *BUMPER*	1	-
19	597783101	KNOB *KNOB*	1	-
21	596240701	BOLT *BOLT*	1	-
30	597781801	BOLT *BOLT*	1	-
37	594944401	NUT *NUT*	1	-
43	597869301	BOLT *BOLT*	1	-
48	536990401	ARM REST KIT *ARM REST KIT*	1	-
50	598001601	SERVICE KIT *SERVICE KIT*	1	-

Ref.	Article N.	Description	Qty	Kit
1	597866101	SERVICE KIT *SERVICE KIT*	1	-
2	532195968	SHAFT *SHAFT*	1	-
4	596873601	SERVICE KIT *SPINDLE*	1	-
5	538691201	SPINDLE *SPINDLE*	1	-
6	532006266	WASHER *WASHER*	1	-
7	532121748	WASHER *WASHER*	1	-
8	812000029	RETAINER RING *RETAINER RING*	1	-
9	532121232	HUB CAP *HUB CAP*	1	-
13	532121749	WASHER *WASHER*	1	-
14	596238701	WASHER *WASHER*	1	-
15	873540600	NUT *NUT*	1	-
16	587016002	SHAFT *SHAFT*	1	-
19	532194729	PLATE *PLATE*	1	-
21	586840201	ADAPTER *ADAPTER*	1	-
22	585029802	BEARING *BEARING*	1	-
26	594949101	CAP *CAP*	1	-
27	596933401	WASHER *WASHER*	1	-
28	817000612	SCREW *SCREW*	1	-
35	532194732	PLATE *PLATE*	1	-
45	587016401	WASHER *WASHER*	1	-
50	873900600	NUT *NUT*	1	-
53	532188967	WASHER	1	-

Ref.	Article N.	Description	Qty	Kit
		WASHER		
57	532407465	BRACKET *BRACKET*	1	-
58	532194747	BOLT *BOLT*	1	-
59	532194748	WASHER *WASHER*	1	-
60	873971000	NUT *NUT*	1	-
61	597070202	LINKAGE *LINKAGE*	1	-
62	597070302	LINKAGE *LINKAGE*	1	-
63	817000512	SCREW *SCREW*	1	-
64	532199849	SPRING RETAINER *SPRING RETAINER*	1	-
66	871020748	BOLT *BOLT*	1	-
67	532194737	BUSHING *BUSHING*	1	-
68	873900700	NUT *NUT*	1	-
69	532199162	WASHER *WASHER*	1	-
70	585338801	BRACKET *BRACKET*	1	-
75	580683701	PINION *PINION*	1	-
76	580683601	SCREW *SCREW*	1	-
122	532444962	CAP *CAP*	1	-
1	532059192	CAP *CAP*	1	-
2	532065139	NIPPLE *NIPPLE*	1	-
3	547005001	WHEEL RIM *WHEEL RIM*	1	-
4	532059904	HOSE *HOSE*	1	-
5	547005101	TIRE *TIRE*	1	-

Ref.	Article N.	Description	Qty	Kit
6	532000278	NIPPLE *NIPPLE*	1	-
7	532009040	BEARING *BEARING*	1	-
8	532175039	HUB CAP *HUB CAP*	1	-
9	547005301	TIRE *TIRE*	1	-
10	532007152	TUBE *TUBE*	1	-
11	547005201	WHEEL RIM *RIM SPROCKET*	1	-
12	576707201	SEALANT *SEALANT*	1	-
1	581579001	DECAL *DECAL*	1	-
2	531229001	DECAL *DECAL*	1	-
3	548219201	DECAL *DECAL*	1	-
4	584904602	DECAL *DECAL*	1	-
5	548074801	DECAL *DECAL*	1	-
6	599966801	DECAL *DECAL*	1	-
7	581724802	DECAL *DECAL*	1	-
8	532439681	PLATE *PAD*	1	-
9	532439682	PAD *PAD*	1	-

MOWER LIFT \/ DECK LIFT

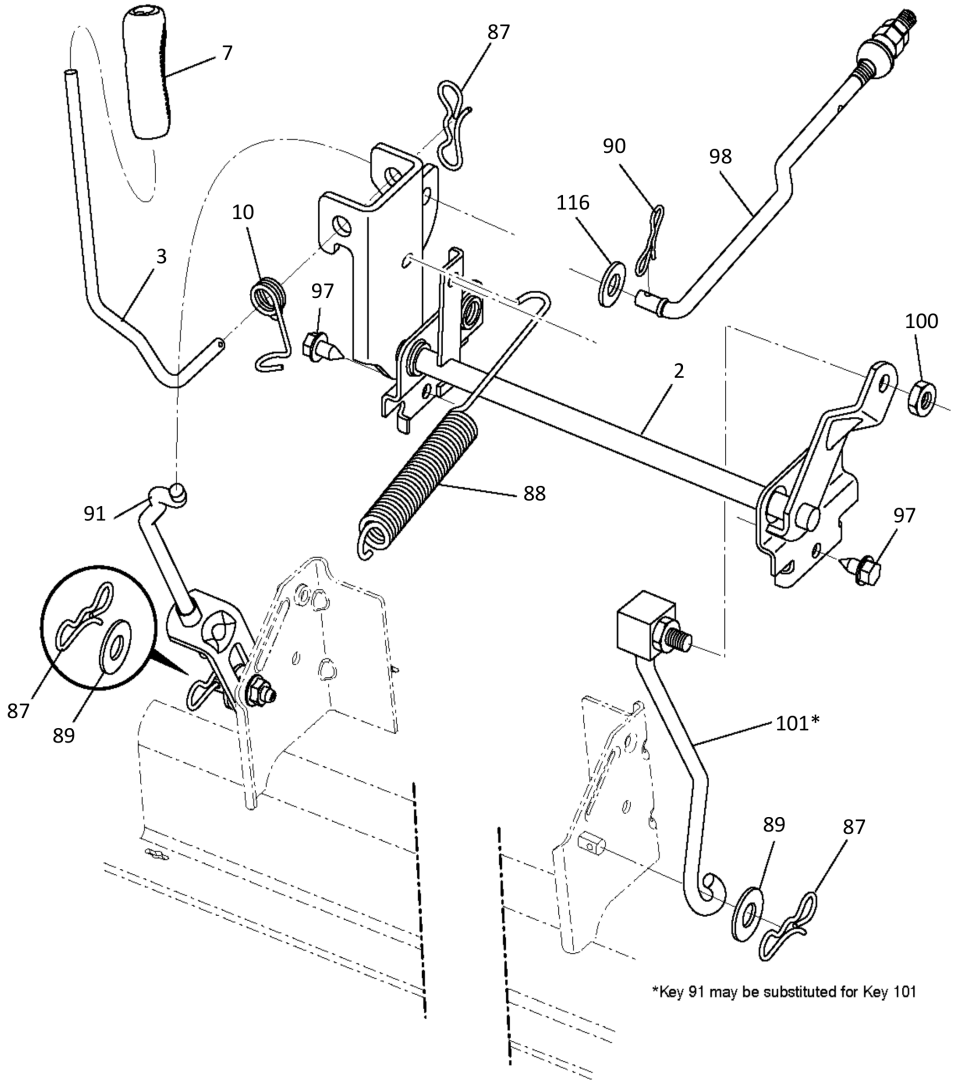

Ref.	Article N.	Description	Qty	Kit
3	597688201	COVER *COVER*	1	-
5	590748818	DASHBOARD *DASHBOARD*	1	-
14	532441177	HOOD *HOOD*	1	-

Ref.	Article N.	Description	Qty	Kit
15	597867801	SERVICE KIT *SERVICE KIT*	1	-
18	597407101	GRILLE *GRILLE*	1	-
34	580910801	CHASSIS *CHASSIS*	1	-
36	817060512	SCREW *SCREW*	1	-
37	532441178	FENDER *FENDER*	1	-
52	596040501	LOCK NUT *LOCK NUT*	1	-
68	596030701	SCREW *SCREW*	1	-
125	581684801	CLIP *CLIP*	1	-
130	596321701	SCREW *SCREW*	1	-
137	532407590	BUMPER *BUMPER*	1	-
146	581857901	BOLT *BOLT*	1	-
150	532439774	AIR DUCT *AIR DUCT*	1	-
151	532436670	BRACKET *BRACKET*	1	-
152	599961102	SHIELD *SHIELD*	1	-
159	817000612	SCREW *SCREW*	1	-
161	532439781	FUEL *FUEL*	1	-
162	596134101	SCREW *SCREW*	1	-
165	532196826	BRACKET *BRACKET*	1	-
175	590607702	CROSS MEMBER *CROSS MEMBER*	1	-
176	532400776	SCREW *SCREW*	1	-
177	532195228	BUSHING *BUSHING*	1	-
180	532195457	CHASSIS	1	-

Ref.	Article N.	Description	Qty	Kit
		CHASSIS		
182	532406859	DASH *DASH*	1	-
183	595305701	SCREW *SCREW*	1	-
189	817000512	SCREW *SCREW*	1	-
194	596135701	LOCK NUT *LOCK NUT*	1	-
195	532404137	PLUG *PLUG*	1	-
199	532413485	PLATE *PLATE*	1	-
202	597867701	SERVICE KIT *SERVICE KIT*	1	-
204	597408001	VENT *VENT*	1	-
205	532439730	TRIM *TRIM*	1	-
206	532439729	TRIM *TRIM*	1	-
213	596030501	SCREW *SCREW*	1	-
214	532199145	CLIP *CLIP*	1	-
217	532409167	ROD *ROD*	1	-
218	532196395	PLATE *PLATE*	1	-
228	593824001	STUD *STUD*	1	-
228	532195161	STUD *STUD*	1	-
235	596564201	SPACER *SPACER*	1	-
236	873930500	NUT *NUT*	1	-
259	596434001	SCREW *SCREW*	1	-
283	532439861	CONSOLE *CONSOLE*	1	-
284	532439823	CONSOLE *CONSOLE*	1	-

Ref.	Article N.	Description	Qty	Kit
285	532416315	CONSOLE *CONSOLE*	1	-
286	532416317	CONSOLE *CONSOLE*	1	-
287	817600406	SCREW *SCREW*	1	-
306	873900600	NUT *NUT*	1	-
335	532448204	COVER *COVER*	1	-
336	532445309	COVER *COVER*	1	-
350	532445143	CLIP *CLIP*	1	-
375	586908201	BUMPER *BUMPER*	1	-
378	590849801	BUSHING *BUSHING*	1	-
379	597334801	BUMPER ASSY *BUMPER ASSY*	1	-
1	900000002	DUMMY PART *DUMMY PART*	1	-
2	532123583	KEY *KEY*	1	-
15	596565301	WASHER *WASHER*	1	-
17	532413678	BRAKE SPRING *BRAKE SPRING*	1	-
26	532199679	SPRING *SPRING*	1	-
29	532403806	ROD *ROD*	1	-
33	812000001	RETAINER RING *RETAINER RING*	1	-
35	590605902	ROD *ROD*	1	-
37	532188967	WASHER *WASHER*	1	-
42	532008883	PEDAL *PEDAL*	1	-
49	596136201	BOLT *BOLT*	1	-
50	532194327	PULLEY	1	-

Ref.	Article N.	Description	Qty	Kit
		PULLEY		
51	873900600	NUT *NUT*	1	-
52	532194326	PULLEY *PULLEY*	1	-
56	592855201	DRIVE BELT *DRIVE BELT*	1	-
64	532197865	SHAFT *SHAFT*	1	-
69	532423303	HAIR PIN COTTER *HAIR PIN COTTER*	1	-
73	596136501	BOLT *BOLT*	1	-
92	595305701	SCREW *SCREW*	1	-
99	582404501	ROD *ROD*	1	-
116	596135701	LOCK NUT *LOCK NUT*	1	-
125	817000512	SCREW *SCREW*	1	-
143	596030701	SCREW *SCREW*	1	-
153	532004497	CLIP *CLIP*	1	-
159	596029501	PIN *PIN*	1	-
161	532105709	SPRING *SPRING*	1	-
163	593861001	ROD *ROD*	1	-
166	532429164	NUT *NUT*	1	-
167	532405257	LATCH *LATCH*	1	-
170	532194322	KEEPER *KEEPER*	1	-
171	596136301	BOLT *BOLT*	1	-
177	587225301	PIN *PIN*	1	-
183	532137057	SPACER *SPACER*	1	-

Ref.	Article N.	Description	Qty	Kit
184	587653701	HANDLE *HANDLE*	1	-
185	872110622	BOLT *BOLT*	1	-
186	532194321	SPACER *SPACER*	1	-
187	596135501	WASHER *WASHER*	1	-
188	582217001	LINK *LINK*	1	-
189	532194317	PLATE *PLATE*	1	-
190	532194318	BELT GUIDE *BELT GUIDE*	1	-
205	532121748	WASHER *WASHER*	1	-
206	532448596	BRACKET *BRACKET*	1	-
207	587031402	LATCH *LATCH*	1	-
208	596564101	GEAR *GEAR*	1	-
209	590527802	ROD *ROD*	1	-
210	532400980	PEDAL ARM *PEDAL ARM*	1	-
211	532120183	BEARING *BEARING*	1	-
213	532403119	CONTROL *CONTROL*	1	-
214	532421263	PAD *PAD*	1	-
215	586606502	PEDAL *PEDAL*	1	-
216	532196131	BRACKET *BRACKET*	1	-
221	532403187	SPRING *SPRING*	1	-
222	879212010	WASHER *WASHER*	1	-
223	598662601	BOLT *BOLT*	1	-
225	532403319	BELT GUIDE	1	-

Ref.	Article N.	Description	Qty	Kit
		BELT GUIDE		
227	596135901	BOLT *BOLT*	1	-
325	585668502	BRACKET *BRACKET*	1	-
326	585670802	BRACKET *BRACKET*	1	-
336	587259602	BOLT *BOLT*	1	-
1	532163465	BATTERY *BATTERY*	1	-
2	874760412	BOLT *BOLT*	1	-
8	587205101	TRAY *TRAY*	1	-
16	532176138	MICRO SWITCH *MICRO SWITCH*	1	-
21	532400252	HARNESS *HARNESS LIGHT*	1	-
22	532004152	BULB *LIGHT BULB*	1	-
24	585555601	CABLE *CABLE*	1	-
25	585555501	CABLE *CABLE*	1	-
26	532175158	FUSE *FUSE*	1	-
27	596133601	LOCK NUT *LOCK NUT*	1	-
28	532416588	CABLE *CABLE*	1	-
29	532192749	SWITCH *SWITCH*	1	-
30	532193350	IGNITION MODULE *IGNITION MODULE*	1	-
33	532411935	KEY *KEY*	1	-
34	532110712	SWITCH *SWITCH*	1	-
40	501133001	HARNESS *HARNESS*	1	-
41	817720408	SCREW *SCREW*	1	-

Ref.	Article N.	Description	Qty	Kit
42	532131563	COVER *COVER*	1	-
43	582042802	SOLENOID *SOLENOID*	1	-
46	594919101	HOUR METER *HOUR METER*	1	-
55	817060512	SCREW *SCREW*	1	-
71	532194276	CABLE ASSY *CABLE ASSY*	1	-
79	532175242	TOOL HOLDER *SOCKET ASM*	1	-
87	532197802	SWITCH *SWITCH*	1	-
90	532435395	TERMINAL COVER *TERMINAL COVER*	1	-
99	817670412	SCREW *SCREW*	1	-
100	596135301	WASHER *WASHER*	1	-
102	532404454	CABLE *CABLE*	1	-
105	532407568	SWITCH *SWITCH*	1	-
1	900000002	DUMMY PART *DUMMY PART*	1	-
2	589818702	MUFFLER *MUFFLER*	1	-
9	596501502	KEEPER *KEEPER*	1	-
12	586728901	PULLEY *PULLEY*	1	-
15	599306004	FUEL TANK ASSY *FUEL TANK ASSY*	1	-
18	585124801	FUEL CAP ASSY *FUEL CAP ASSY*	1	-
18	529989702	CAP *CAP*	1	-
20	532423502	CONTROL *THROTTLE*	1	-
21	596321701	SCREW *SCREW*	1	-
28	532401135	LINE	1	-

Ref.	Article N.	Description	Qty	Kit
		LINE		
29	532137180	SPARK ARRESTER *SPARK ARRESTER*	1	-
37	532123487	HOSE CLAMP *HOSE CLAMP*	1	-
42	596238901	WASHER *WASHER*	1	-
45	596133601	LOCK NUT *LOCK NUT*	1	-
62	532434017	SHIELD *SHIELD*	1	-
69	532165391	GASKET *GASKET*	1	-
70	581881101	TUBE *TUBE*	1	-
71	581881001	TUBE *TUBE*	1	-
79	596134202	SCREW *SCREW*	1	-
81	532148456	TUBE *TUBE*	1	-
82	532428287	PLUG *PLUG*	1	-
84	817060620	SCREW *SCREW*	1	-
85	501606501	BOLT *BOLT*	1	-
90	817000616	SCREW *SCREW*	1	-
91	532187495	BUSHING *BUSHING*	1	-
102	817000512	SCREW *SCREW*	1	-
1	586352301	SERVICE TOOLS *SERVICE TOOLS*	1	-
2	532405507	COVER *COVER*	1	-
3	532405506	COVER *COVER*	1	-
4	596030501	SCREW *SCREW*	1	-
6	532195186	ARM *ARM*	1	-

Ref.	Article N.	Description	Qty	Kit
7	596321701	SCREW *SCREW*	1	-
11	532405380	RIDE ON BLADE *RIDE ON BLADE*	1	-
12	584309301	SCREW *SCREW*	1	-
14	587819701	MANDREL *MANDREL*	1	-
19	532196539	BOLT *BOLT*	1	-
21	596040501	LOCK NUT *LOCK NUT*	1	-
23	532192557	HINGE *HINGE*	1	-
24	532105304	HUB CAP *HUB CAP*	1	-
25	532197026	TORSION SPRING *TORSION SPRING*	1	-
26	532110452	NUT *NUT*	1	-
27	532405357	DEFLECTOR *DEFLECTOR*	1	-
29	595297001	ROD *ROD*	1	-
32	532197473	PULLEY *PULLEY*	1	-
33	596134801	HEXAGON NUT *HEXAGON NUT*	1	-
34	596136101	BOLT *BOLT*	1	-
36	532197379	PULLEY *PULLEY*	1	-
37	596565301	WASHER *WASHER*	1	-
38	589676102	KEEPER *KEEPER*	1	-
40	873900600	NUT *NUT*	1	-
41	584953901	BOLT *BOLT*	1	-
42	532198410	SPRING *SPRING*	1	-
43	532197256	SPRING	1	-

Ref.	Article N.	Description	Qty	Kit
		SPRING		
46	532137729	SCREW *SCREW*	1	-
47	532197250	BRACKET *BRACKET*	1	-
55	532197249	ARM *ARM*	1	-
56	532199092	SPACER *SPACER*	1	-
57	817000616	SCREW *SCREW*	1	-
59	532141043	GUARD *GUARD*	1	-
60	532199471	ARM *ARM*	1	-
63	532199477	ARM *ARM*	1	-
64	532405139	LINKAGE *LINKAGE*	1	-
65	596039401	BOLT *BOLT*	1	-
67	532403012	HANDLE *HANDLE*	1	-
68	532405143	DRIVE BELT *DRIVE BELT*	1	-
69	596136401	BOLT *BOLT*	1	-
70	532199972	CLUTCH ASSY *CLUTCH ASSY*	1	-
113	817000510	BOLT *BOLT*	1	-
116	596434404	BOLT *BOLT*	1	-
117	589527301	WHEEL *WHEEL*	1	-
119	596134901	WASHER *WASHER*	1	-
122	532197258	BELT GUIDE *BELT GUIDE*	1	-
123	532197259	BELT GUIDE *BELT GUIDE*	1	-
144	532199204	BELT GUIDE *BELT GUIDE*	1	-

Ref.	Article N.	Description	Qty	Kit
145	532193197	PULLEY *PULLEY*	1	-
147	532401872	SPRING *SPRING*	1	-
152	584243501	CABLE *CABLE*	1	-
188	593824001	STUD *STUD*	1	-
189	596135701	LOCK NUT *LOCK NUT*	1	-
195	817000612	SCREW *SCREW*	1	-
197	596133201	WASHER *WASHER*	1	-
198	532403149	PLATE *PLATE*	1	-
199	532403150	PLATE *PLATE*	1	-
200	532413524	WASHER *WASHER*	1	-
240	874520636	BOLT *BOLT*	1	-
241	532137729	SCREW *SCREW*	1	-
242	532415598	HOSE COUPLING *HOSE COUPLING*	1	-
243	532416405	COUPLING *COUPLING*	1	-
2	532422027	SHAFT *SHAFT*	1	-
3	594018001	LEVER *LEVER*	1	-
7	580962301	GRIP *GRIP*	1	-
10	532196314	SPRING *SPRING*	1	-
87	532194209	SPRING *SPRING*	1	-
88	532410710	SPRING *SPRING*	1	-
89	819191912	WASHER *WASHER*	1	-
90	532194208	PIN	1	-

Ref.	Article N.	Description	Qty	Kit
		PIN		
91	589464803	LINK ASSY *LINK ASSY*	1	-
97	817000612	SCREW *SCREW*	1	-
98	581506903	LINK ASSY *LINK ASSY*	1	-
100	595305901	NUT *NUT*	1	-
101	532407003	LINK *LINK*	1	-
116	594976501	WASHER *WASHER*	1	-
1	900000002	DUMMY PART *DUMMY PART*	1	-
1	536178101	SEAT *SEAT*	1	-
2	597329902	BRACKET *BRACKET*	1	-
3	590777602	BRACKET *N/A*	1	-
4	536960901	RETAINER *RETAINER*	1	-
6	521996502	NUT *NUT*	1	-
8	532171877	BOLT *BOLT*	1	-
9	597785101	BUMPER *BUMPER*	1	-
19	597783101	KNOB *KNOB*	1	-
21	596240701	BOLT *BOLT*	1	-
30	597781801	BOLT *BOLT*	1	-
37	594944401	NUT *NUT*	1	-
43	597869301	BOLT *BOLT*	1	-
48	536990401	ARM REST KIT *ARM REST KIT*	1	-
50	598001601	SERVICE KIT *SERVICE KIT*	1	-

Ref.	Article N.	Description	Qty	Kit
1	597866101	SERVICE KIT *SERVICE KIT*	1	-
2	532195968	SHAFT *SHAFT*	1	-
4	596873601	SERVICE KIT *SPINDLE*	1	-
5	538691201	SPINDLE *SPINDLE*	1	-
6	532006266	WASHER *WASHER*	1	-
7	532121748	WASHER *WASHER*	1	-
8	812000029	RETAINER RING *RETAINER RING*	1	-
9	532121232	HUB CAP *HUB CAP*	1	-
13	532121749	WASHER *WASHER*	1	-
14	596238701	WASHER *WASHER*	1	-
15	873540600	NUT *NUT*	1	-
16	587016002	SHAFT *SHAFT*	1	-
19	532194729	PLATE *PLATE*	1	-
21	586840201	ADAPTER *ADAPTER*	1	-
22	585029802	BEARING *BEARING*	1	-
26	594949101	CAP *CAP*	1	-
27	596933401	WASHER *WASHER*	1	-
28	817000612	SCREW *SCREW*	1	-
35	532194732	PLATE *PLATE*	1	-
45	587016401	WASHER *WASHER*	1	-
50	873900600	NUT *NUT*	1	-
53	532188967	WASHER	1	-

Ref.	Article N.	Description	Qty	Kit
		WASHER		
57	532407465	BRACKET *BRACKET*	1	-
58	532194747	BOLT *BOLT*	1	-
59	532194748	WASHER *WASHER*	1	-
60	873971000	NUT *NUT*	1	-
61	597070202	LINKAGE *LINKAGE*	1	-
62	597070302	LINKAGE *LINKAGE*	1	-
63	817000512	SCREW *SCREW*	1	-
64	532199849	SPRING RETAINER *SPRING RETAINER*	1	-
66	871020748	BOLT *BOLT*	1	-
67	532194737	BUSHING *BUSHING*	1	-
68	873900700	NUT *NUT*	1	-
69	532199162	WASHER *WASHER*	1	-
70	585338801	BRACKET *BRACKET*	1	-
75	580683701	PINION *PINION*	1	-
76	580683601	SCREW *SCREW*	1	-
122	532444962	CAP *CAP*	1	-
1	532059192	CAP *CAP*	1	-
2	532065139	NIPPLE *NIPPLE*	1	-
3	547005001	WHEEL RIM *WHEEL RIM*	1	-
4	532059904	HOSE *HOSE*	1	-
5	547005101	TIRE *TIRE*	1	-

Ref.	Article N.	Description	Qty	Kit
6	532000278	NIPPLE *NIPPLE*	1	-
7	532009040	BEARING *BEARING*	1	-
8	532175039	HUB CAP *HUB CAP*	1	-
9	547005301	TIRE *TIRE*	1	-
10	532007152	TUBE *TUBE*	1	-
11	547005201	WHEEL RIM *RIM SPROCKET*	1	-
12	576707201	SEALANT *SEALANT*	1	-
1	581579001	DECAL *DECAL*	1	-
2	531229001	DECAL *DECAL*	1	-
3	548219201	DECAL *DECAL*	1	-
4	584904602	DECAL *DECAL*	1	-
5	548074801	DECAL *DECAL*	1	-
6	599966801	DECAL *DECAL*	1	-
7	581724802	DECAL *DECAL*	1	-
8	532439681	PLATE *PAD*	1	-
9	532439682	PAD *PAD*	1	-

SCHEMATIC

SCH11

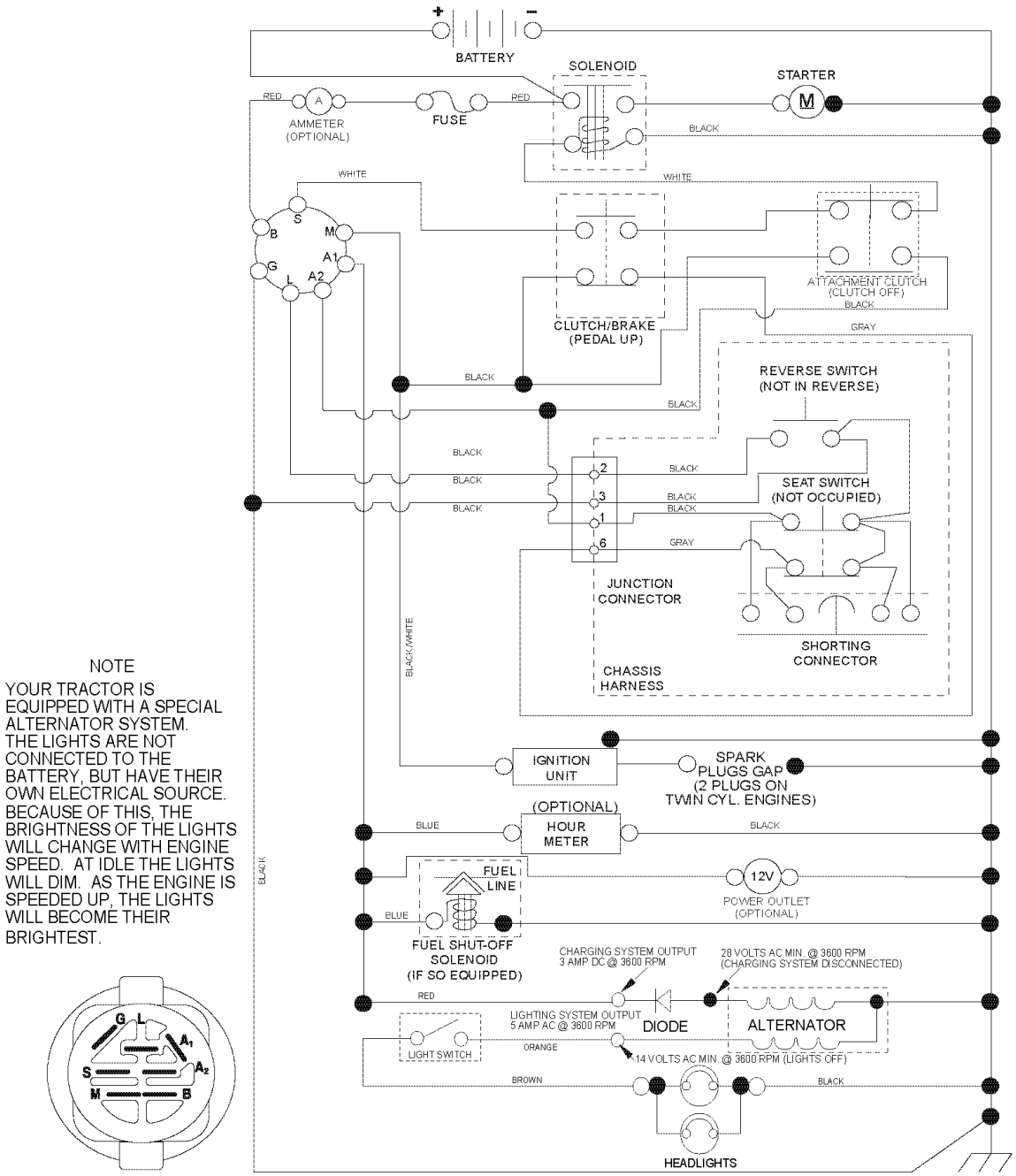

NOTE

YOUR TRACTOR IS EQUIPPED WITH A SPECIAL ALTERNATOR SYSTEM. THE LIGHTS ARE NOT CONNECTED TO THE BATTERY, BUT HAVE THEIR OWN ELECTRICAL SOURCE. BECAUSE OF THIS, THE BRIGHTNESS OF THE LIGHTS WILL CHANGE WITH ENGINE SPEED. AT IDLE THE LIGHTS WILL DIM. AS THE ENGINE IS SPEEDED UP, THE LIGHTS WILL BECOME THEIR BRIGHTEST.

IGNITION SWITCH

POSITION	CIRCUIT "MAKE"	
OFF	M+G+A1	
RUN/OVERRIDE	B+A1	
RUN	B+A1	L+A2
START	B + S + A1	

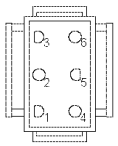

CHASSIS HARNESS CONNECTOR (MATING SIDE)

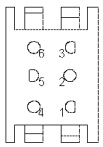

DASH HARNESS CONNECTOR (MATING SIDE)

WIRING INSULATED CLIPS NOTE: IF WIRING INSULATED CLIPS WERE REMOVED FOR SERVICING OF UNIT, THEY SHOULD BE RE-INSTALLED TO PROPERLY SECURE YOUR WIRING.

NON-REMOVABLE CONNECTIONS

REMOVABLE CONNECTIONS

Ref.	Article N.	Description	Qty	Kit
3	597688201	COVER *COVER*	1	-
5	590748818	DASHBOARD *DASHBOARD*	1	-
14	532441177	HOOD *HOOD*	1	-

Ref.	Article N.	Description	Qty	Kit
15	597867801	SERVICE KIT *SERVICE KIT*	1	-
18	597407101	GRILLE *GRILLE*	1	-
34	580910801	CHASSIS *CHASSIS*	1	-
36	817060512	SCREW *SCREW*	1	-
37	532441178	FENDER *FENDER*	1	-
52	596040501	LOCK NUT *LOCK NUT*	1	-
68	596030701	SCREW *SCREW*	1	-
125	581684801	CLIP *CLIP*	1	-
130	596321701	SCREW *SCREW*	1	-
137	532407590	BUMPER *BUMPER*	1	-
146	581857901	BOLT *BOLT*	1	-
150	532439774	AIR DUCT *AIR DUCT*	1	-
151	532436670	BRACKET *BRACKET*	1	-
152	599961102	SHIELD *SHIELD*	1	-
159	817000612	SCREW *SCREW*	1	-
161	532439781	FUEL *FUEL*	1	-
162	596134101	SCREW *SCREW*	1	-
165	532196826	BRACKET *BRACKET*	1	-
175	590607702	CROSS MEMBER *CROSS MEMBER*	1	-
176	532400776	SCREW *SCREW*	1	-
177	532195228	BUSHING *BUSHING*	1	-
180	532195457	CHASSIS	1	-

Ref.	Article N.	Description	Qty	Kit
		CHASSIS		
182	532406859	DASH *DASH*	1	-
183	595305701	SCREW *SCREW*	1	-
189	817000512	SCREW *SCREW*	1	-
194	596135701	LOCK NUT *LOCK NUT*	1	-
195	532404137	PLUG *PLUG*	1	-
199	532413485	PLATE *PLATE*	1	-
202	597867701	SERVICE KIT *SERVICE KIT*	1	-
204	597408001	VENT *VENT*	1	-
205	532439730	TRIM *TRIM*	1	-
206	532439729	TRIM *TRIM*	1	-
213	596030501	SCREW *SCREW*	1	-
214	532199145	CLIP *CLIP*	1	-
217	532409167	ROD *ROD*	1	-
218	532196395	PLATE *PLATE*	1	-
228	593824001	STUD *STUD*	1	-
228	532195161	STUD *STUD*	1	-
235	596564201	SPACER *SPACER*	1	-
236	873930500	NUT *NUT*	1	-
259	596434001	SCREW *SCREW*	1	-
283	532439861	CONSOLE *CONSOLE*	1	-
284	532439823	CONSOLE *CONSOLE*	1	-

Ref.	Article N.	Description	Qty	Kit
285	532416315	CONSOLE *CONSOLE*	1	-
286	532416317	CONSOLE *CONSOLE*	1	-
287	817600406	SCREW *SCREW*	1	-
306	873900600	NUT *NUT*	1	-
335	532448204	COVER *COVER*	1	-
336	532445309	COVER *COVER*	1	-
350	532445143	CLIP *CLIP*	1	-
375	586908201	BUMPER *BUMPER*	1	-
378	590849801	BUSHING *BUSHING*	1	-
379	597334801	BUMPER ASSY *BUMPER ASSY*	1	-
1	900000002	DUMMY PART *DUMMY PART*	1	-
2	532123583	KEY *KEY*	1	-
15	596565301	WASHER *WASHER*	1	-
17	532413678	BRAKE SPRING *BRAKE SPRING*	1	-
26	532199679	SPRING *SPRING*	1	-
29	532403806	ROD *ROD*	1	-
33	812000001	RETAINER RING *RETAINER RING*	1	-
35	590605902	ROD *ROD*	1	-
37	532188967	WASHER *WASHER*	1	-
42	532008883	PEDAL *PEDAL*	1	-
49	596136201	BOLT *BOLT*	1	-
50	532194327	PULLEY	1	-

Ref.	Article N.	Description	Qty	Kit
		PULLEY		
51	873900600	NUT *NUT*	1	-
52	532194326	PULLEY *PULLEY*	1	-
56	592855201	DRIVE BELT *DRIVE BELT*	1	-
64	532197865	SHAFT *SHAFT*	1	-
69	532423303	HAIR PIN COTTER *HAIR PIN COTTER*	1	-
73	596136501	BOLT *BOLT*	1	-
92	595305701	SCREW *SCREW*	1	-
99	582404501	ROD *ROD*	1	-
116	596135701	LOCK NUT *LOCK NUT*	1	-
125	817000512	SCREW *SCREW*	1	-
143	596030701	SCREW *SCREW*	1	-
153	532004497	CLIP *CLIP*	1	-
159	596029501	PIN *PIN*	1	-
161	532105709	SPRING *SPRING*	1	-
163	593861001	ROD *ROD*	1	-
166	532429164	NUT *NUT*	1	-
167	532405257	LATCH *LATCH*	1	-
170	532194322	KEEPER *KEEPER*	1	-
171	596136301	BOLT *BOLT*	1	-
177	587225301	PIN *PIN*	1	-
183	532137057	SPACER *SPACER*	1	-

Ref.	Article N.	Description	Qty	Kit
184	587653701	HANDLE *HANDLE*	1	-
185	872110622	BOLT *BOLT*	1	-
186	532194321	SPACER *SPACER*	1	-
187	596135501	WASHER *WASHER*	1	-
188	582217001	LINK *LINK*	1	-
189	532194317	PLATE *PLATE*	1	-
190	532194318	BELT GUIDE *BELT GUIDE*	1	-
205	532121748	WASHER *WASHER*	1	-
206	532448596	BRACKET *BRACKET*	1	-
207	587031402	LATCH *LATCH*	1	-
208	596564101	GEAR *GEAR*	1	-
209	590527802	ROD *ROD*	1	-
210	532400980	PEDAL ARM *PEDAL ARM*	1	-
211	532120183	BEARING *BEARING*	1	-
213	532403119	CONTROL *CONTROL*	1	-
214	532421263	PAD *PAD*	1	-
215	586606502	PEDAL *PEDAL*	1	-
216	532196131	BRACKET *BRACKET*	1	-
221	532403187	SPRING *SPRING*	1	-
222	879212010	WASHER *WASHER*	1	-
223	598662601	BOLT *BOLT*	1	-
225	532403319	BELT GUIDE	1	-

Ref.	Article N.	Description	Qty	Kit
		BELT GUIDE		
227	596135901	BOLT *BOLT*	1	-
325	585668502	BRACKET *BRACKET*	1	-
326	585670802	BRACKET *BRACKET*	1	-
336	587259602	BOLT *BOLT*	1	-
1	532163465	BATTERY *BATTERY*	1	-
2	874760412	BOLT *BOLT*	1	-
8	587205101	TRAY *TRAY*	1	-
16	532176138	MICRO SWITCH *MICRO SWITCH*	1	-
21	532400252	HARNESS *HARNESS LIGHT*	1	-
22	532004152	BULB *LIGHT BULB*	1	-
24	585555601	CABLE *CABLE*	1	-
25	585555501	CABLE *CABLE*	1	-
26	532175158	FUSE *FUSE*	1	-
27	596133601	LOCK NUT *LOCK NUT*	1	-
28	532416588	CABLE *CABLE*	1	-
29	532192749	SWITCH *SWITCH*	1	-
30	532193350	IGNITION MODULE *IGNITION MODULE*	1	-
33	532411935	KEY *KEY*	1	-
34	532110712	SWITCH *SWITCH*	1	-
40	501133001	HARNESS *HARNESS*	1	-
41	817720408	SCREW *SCREW*	1	-

Ref.	Article N.	Description	Qty	Kit
42	532131563	COVER *COVER*	1	-
43	582042802	SOLENOID *SOLENOID*	1	-
46	594919101	HOUR METER *HOUR METER*	1	-
55	817060512	SCREW *SCREW*	1	-
71	532194276	CABLE ASSY *CABLE ASSY*	1	-
79	532175242	TOOL HOLDER *SOCKET ASM*	1	-
87	532197802	SWITCH *SWITCH*	1	-
90	532435395	TERMINAL COVER *TERMINAL COVER*	1	-
99	817670412	SCREW *SCREW*	1	-
100	596135301	WASHER *WASHER*	1	-
102	532404454	CABLE *CABLE*	1	-
105	532407568	SWITCH *SWITCH*	1	-
1	900000002	DUMMY PART *DUMMY PART*	1	-
2	589818702	MUFFLER *MUFFLER*	1	-
9	596501502	KEEPER *KEEPER*	1	-
12	586728901	PULLEY *PULLEY*	1	-
15	599306004	FUEL TANK ASSY *FUEL TANK ASSY*	1	-
18	585124801	FUEL CAP ASSY *FUEL CAP ASSY*	1	-
18	529989702	CAP *CAP*	1	-
20	532423502	CONTROL *THROTTLE*	1	-
21	596321701	SCREW *SCREW*	1	-
28	532401135	LINE	1	-

Ref.	Article N.	Description	Qty	Kit
		LINE		
29	532137180	SPARK ARRESTER *SPARK ARRESTER*	1	-
37	532123487	HOSE CLAMP *HOSE CLAMP*	1	-
42	596238901	WASHER *WASHER*	1	-
45	596133601	LOCK NUT *LOCK NUT*	1	-
62	532434017	SHIELD *SHIELD*	1	-
69	532165391	GASKET *GASKET*	1	-
70	581881101	TUBE *TUBE*	1	-
71	581881001	TUBE *TUBE*	1	-
79	596134202	SCREW *SCREW*	1	-
81	532148456	TUBE *TUBE*	1	-
82	532428287	PLUG *PLUG*	1	-
84	817060620	SCREW *SCREW*	1	-
85	501606501	BOLT *BOLT*	1	-
90	817000616	SCREW *SCREW*	1	-
91	532187495	BUSHING *BUSHING*	1	-
102	817000512	SCREW *SCREW*	1	-
1	586352301	SERVICE TOOLS *SERVICE TOOLS*	1	-
2	532405507	COVER *COVER*	1	-
3	532405506	COVER *COVER*	1	-
4	596030501	SCREW *SCREW*	1	-
6	532195186	ARM *ARM*	1	-

Ref.	Article N.	Description	Qty	Kit
7	596321701	SCREW *SCREW*	1	-
11	532405380	RIDE ON BLADE *RIDE ON BLADE*	1	-
12	584309301	SCREW *SCREW*	1	-
14	587819701	MANDREL *MANDREL*	1	-
19	532196539	BOLT *BOLT*	1	-
21	596040501	LOCK NUT *LOCK NUT*	1	-
23	532192557	HINGE *HINGE*	1	-
24	532105304	HUB CAP *HUB CAP*	1	-
25	532197026	TORSION SPRING *TORSION SPRING*	1	-
26	532110452	NUT *NUT*	1	-
27	532405357	DEFLECTOR *DEFLECTOR*	1	-
29	595297001	ROD *ROD*	1	-
32	532197473	PULLEY *PULLEY*	1	-
33	596134801	HEXAGON NUT *HEXAGON NUT*	1	-
34	596136101	BOLT *BOLT*	1	-
36	532197379	PULLEY *PULLEY*	1	-
37	596565301	WASHER *WASHER*	1	-
38	589676102	KEEPER *KEEPER*	1	-
40	873900600	NUT *NUT*	1	-
41	584953901	BOLT *BOLT*	1	-
42	532198410	SPRING *SPRING*	1	-
43	532197256	SPRING	1	-

Ref.	Article N.	Description	Qty	Kit
		SPRING		
46	532137729	SCREW *SCREW*	1	-
47	532197250	BRACKET *BRACKET*	1	-
55	532197249	ARM *ARM*	1	-
56	532199092	SPACER *SPACER*	1	-
57	817000616	SCREW *SCREW*	1	-
59	532141043	GUARD *GUARD*	1	-
60	532199471	ARM *ARM*	1	-
63	532199477	ARM *ARM*	1	-
64	532405139	LINKAGE *LINKAGE*	1	-
65	596039401	BOLT *BOLT*	1	-
67	532403012	HANDLE *HANDLE*	1	-
68	532405143	DRIVE BELT *DRIVE BELT*	1	-
69	596136401	BOLT *BOLT*	1	-
70	532199972	CLUTCH ASSY *CLUTCH ASSY*	1	-
113	817000510	BOLT *BOLT*	1	-
116	596434404	BOLT *BOLT*	1	-
117	589527301	WHEEL *WHEEL*	1	-
119	596134901	WASHER *WASHER*	1	-
122	532197258	BELT GUIDE *BELT GUIDE*	1	-
123	532197259	BELT GUIDE *BELT GUIDE*	1	-
144	532199204	BELT GUIDE *BELT GUIDE*	1	-

Ref.	Article N.	Description	Qty	Kit
145	532193197	PULLEY *PULLEY*	1	-
147	532401872	SPRING *SPRING*	1	-
152	584243501	CABLE *CABLE*	1	-
188	593824001	STUD *STUD*	1	-
189	596135701	LOCK NUT *LOCK NUT*	1	-
195	817000612	SCREW *SCREW*	1	-
197	596133201	WASHER *WASHER*	1	-
198	532403149	PLATE *PLATE*	1	-
199	532403150	PLATE *PLATE*	1	-
200	532413524	WASHER *WASHER*	1	-
240	874520636	BOLT *BOLT*	1	-
241	532137729	SCREW *SCREW*	1	-
242	532415598	HOSE COUPLING *HOSE COUPLING*	1	-
243	532416405	COUPLING *COUPLING*	1	-
2	532422027	SHAFT *SHAFT*	1	-
3	594018001	LEVER *LEVER*	1	-
7	580962301	GRIP *GRIP*	1	-
10	532196314	SPRING *SPRING*	1	-
87	532194209	SPRING *SPRING*	1	-
88	532410710	SPRING *SPRING*	1	-
89	819191912	WASHER *WASHER*	1	-
90	532194208	PIN	1	-

Ref.	Article N.	Description	Qty	Kit
		PIN		
91	589464803	LINK ASSY *LINK ASSY*	1	-
97	817000612	SCREW *SCREW*	1	-
98	581506903	LINK ASSY *LINK ASSY*	1	-
100	595305901	NUT *NUT*	1	-
101	532407003	LINK *LINK*	1	-
116	594976501	WASHER *WASHER*	1	-
1	900000002	DUMMY PART *DUMMY PART*	1	-
1	536178101	SEAT *SEAT*	1	-
2	597329902	BRACKET *BRACKET*	1	-
3	590777602	BRACKET *N/A*	1	-
4	536960901	RETAINER *RETAINER*	1	-
6	521996502	NUT *NUT*	1	-
8	532171877	BOLT *BOLT*	1	-
9	597785101	BUMPER *BUMPER*	1	-
19	597783101	KNOB *KNOB*	1	-
21	596240701	BOLT *BOLT*	1	-
30	597781801	BOLT *BOLT*	1	-
37	594944401	NUT *NUT*	1	-
43	597869301	BOLT *BOLT*	1	-
48	536990401	ARM REST KIT *ARM REST KIT*	1	-
50	598001601	SERVICE KIT *SERVICE KIT*	1	-

Ref.	Article N.	Description	Qty	Kit
1	597866101	SERVICE KIT *SERVICE KIT*	1	-
2	532195968	SHAFT *SHAFT*	1	-
4	596873601	SERVICE KIT *SPINDLE*	1	-
5	538691201	SPINDLE *SPINDLE*	1	-
6	532006266	WASHER *WASHER*	1	-
7	532121748	WASHER *WASHER*	1	-
8	812000029	RETAINER RING *RETAINER RING*	1	-
9	532121232	HUB CAP *HUB CAP*	1	-
13	532121749	WASHER *WASHER*	1	-
14	596238701	WASHER *WASHER*	1	-
15	873540600	NUT *NUT*	1	-
16	587016002	SHAFT *SHAFT*	1	-
19	532194729	PLATE *PLATE*	1	-
21	586840201	ADAPTER *ADAPTER*	1	-
22	585029802	BEARING *BEARING*	1	-
26	594949101	CAP *CAP*	1	-
27	596933401	WASHER *WASHER*	1	-
28	817000612	SCREW *SCREW*	1	-
35	532194732	PLATE *PLATE*	1	-
45	587016401	WASHER *WASHER*	1	-
50	873900600	NUT *NUT*	1	-
53	532188967	WASHER	1	-

Ref.	Article N.	Description	Qty	Kit
		WASHER		
57	532407465	BRACKET *BRACKET*	1	-
58	532194747	BOLT *BOLT*	1	-
59	532194748	WASHER *WASHER*	1	-
60	873971000	NUT *NUT*	1	-
61	597070202	LINKAGE *LINKAGE*	1	-
62	597070302	LINKAGE *LINKAGE*	1	-
63	817000512	SCREW *SCREW*	1	-
64	532199849	SPRING RETAINER *SPRING RETAINER*	1	-
66	871020748	BOLT *BOLT*	1	-
67	532194737	BUSHING *BUSHING*	1	-
68	873900700	NUT *NUT*	1	-
69	532199162	WASHER *WASHER*	1	-
70	585338801	BRACKET *BRACKET*	1	-
75	580683701	PINION *PINION*	1	-
76	580683601	SCREW *SCREW*	1	-
122	532444962	CAP *CAP*	1	-
1	532059192	CAP *CAP*	1	-
2	532065139	NIPPLE *NIPPLE*	1	-
3	547005001	WHEEL RIM *WHEEL RIM*	1	-
4	532059904	HOSE *HOSE*	1	-
5	547005101	TIRE *TIRE*	1	-

Ref.	Article N.	Description	Qty	Kit
6	532000278	NIPPLE *NIPPLE*	1	-
7	532009040	BEARING *BEARING*	1	-
8	532175039	HUB CAP *HUB CAP*	1	-
9	547005301	TIRE *TIRE*	1	-
10	532007152	TUBE *TUBE*	1	-
11	547005201	WHEEL RIM *RIM SPROCKET*	1	-
12	576707201	SEALANT *SEALANT*	1	-
1	581579001	DECAL *DECAL*	1	-
2	531229001	DECAL *DECAL*	1	-
3	548219201	DECAL *DECAL*	1	-
4	584904602	DECAL *DECAL*	1	-
5	548074801	DECAL *DECAL*	1	-
6	599966801	DECAL *DECAL*	1	-
7	581724802	DECAL *DECAL*	1	-
8	532439681	PLATE *PAD*	1	-
9	532439682	PAD *PAD*	1	-

SEAT

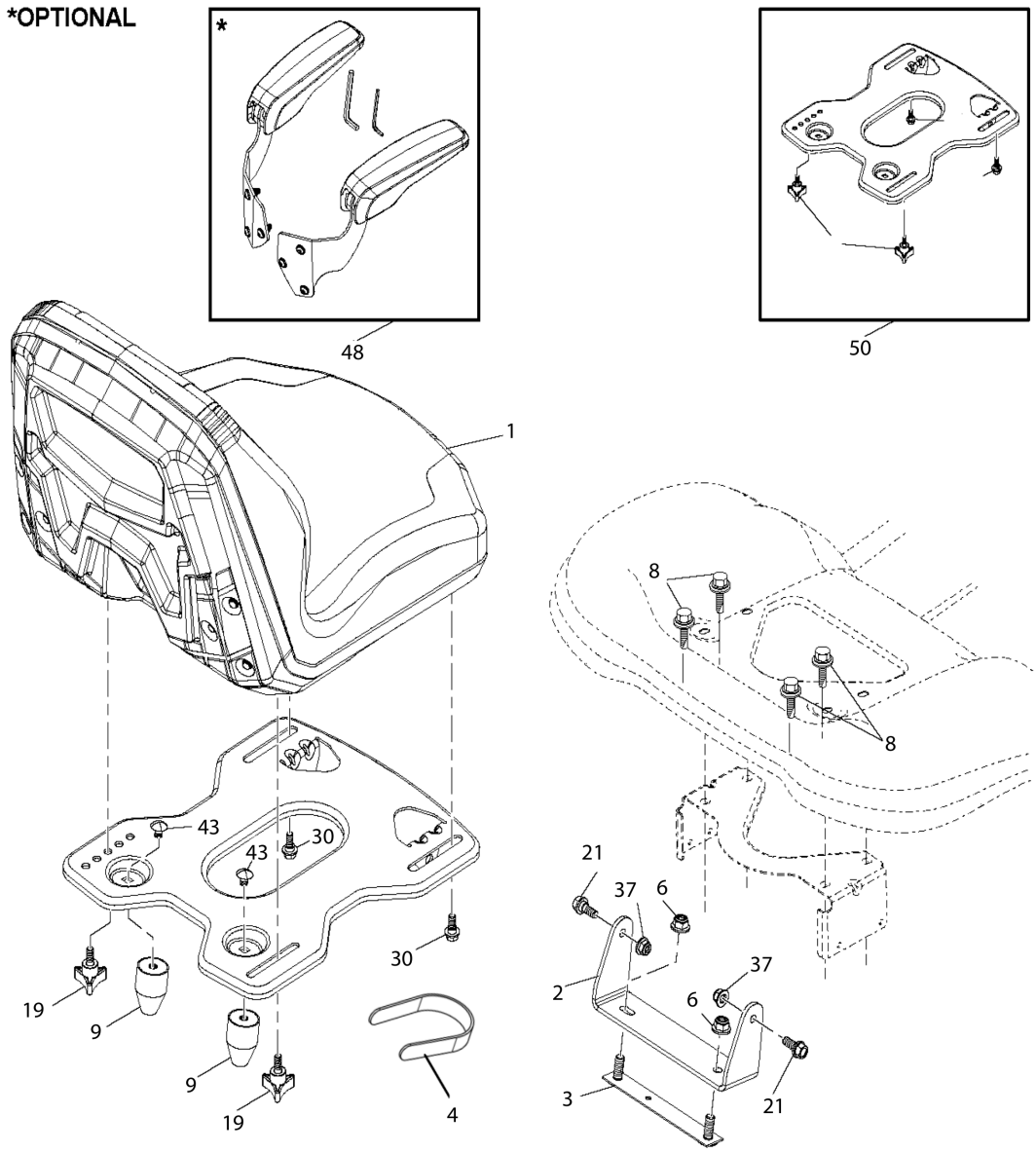

Ref.	Article N.	Description	Qty	Kit
3	597688201	COVER *COVER*	1	-
5	590748818	DASHBOARD *DASHBOARD*	1	-
14	532441177	HOOD *HOOD*	1	-

Ref.	Article N.	Description	Qty	Kit
15	597867801	SERVICE KIT *SERVICE KIT*	1	-
18	597407101	GRILLE *GRILLE*	1	-
34	580910801	CHASSIS *CHASSIS*	1	-
36	817060512	SCREW *SCREW*	1	-
37	532441178	FENDER *FENDER*	1	-
52	596040501	LOCK NUT *LOCK NUT*	1	-
68	596030701	SCREW *SCREW*	1	-
125	581684801	CLIP *CLIP*	1	-
130	596321701	SCREW *SCREW*	1	-
137	532407590	BUMPER *BUMPER*	1	-
146	581857901	BOLT *BOLT*	1	-
150	532439774	AIR DUCT *AIR DUCT*	1	-
151	532436670	BRACKET *BRACKET*	1	-
152	599961102	SHIELD *SHIELD*	1	-
159	817000612	SCREW *SCREW*	1	-
161	532439781	FUEL *FUEL*	1	-
162	596134101	SCREW *SCREW*	1	-
165	532196826	BRACKET *BRACKET*	1	-
175	590607702	CROSS MEMBER *CROSS MEMBER*	1	-
176	532400776	SCREW *SCREW*	1	-
177	532195228	BUSHING *BUSHING*	1	-
180	532195457	CHASSIS	1	-

Ref.	Article N.	Description	Qty	Kit
		CHASSIS		
182	532406859	DASH *DASH*	1	-
183	595305701	SCREW *SCREW*	1	-
189	817000512	SCREW *SCREW*	1	-
194	596135701	LOCK NUT *LOCK NUT*	1	-
195	532404137	PLUG *PLUG*	1	-
199	532413485	PLATE *PLATE*	1	-
202	597867701	SERVICE KIT *SERVICE KIT*	1	-
204	597408001	VENT *VENT*	1	-
205	532439730	TRIM *TRIM*	1	-
206	532439729	TRIM *TRIM*	1	-
213	596030501	SCREW *SCREW*	1	-
214	532199145	CLIP *CLIP*	1	-
217	532409167	ROD *ROD*	1	-
218	532196395	PLATE *PLATE*	1	-
228	593824001	STUD *STUD*	1	-
228	532195161	STUD *STUD*	1	-
235	596564201	SPACER *SPACER*	1	-
236	873930500	NUT *NUT*	1	-
259	596434001	SCREW *SCREW*	1	-
283	532439861	CONSOLE *CONSOLE*	1	-
284	532439823	CONSOLE *CONSOLE*	1	-

Ref.	Article N.	Description	Qty	Kit
285	532416315	CONSOLE *CONSOLE*	1	-
286	532416317	CONSOLE *CONSOLE*	1	-
287	817600406	SCREW *SCREW*	1	-
306	873900600	NUT *NUT*	1	-
335	532448204	COVER *COVER*	1	-
336	532445309	COVER *COVER*	1	-
350	532445143	CLIP *CLIP*	1	-
375	586908201	BUMPER *BUMPER*	1	-
378	590849801	BUSHING *BUSHING*	1	-
379	597334801	BUMPER ASSY *BUMPER ASSY*	1	-
1	900000002	DUMMY PART *DUMMY PART*	1	-
2	532123583	KEY *KEY*	1	-
15	596565301	WASHER *WASHER*	1	-
17	532413678	BRAKE SPRING *BRAKE SPRING*	1	-
26	532199679	SPRING *SPRING*	1	-
29	532403806	ROD *ROD*	1	-
33	812000001	RETAINER RING *RETAINER RING*	1	-
35	590605902	ROD *ROD*	1	-
37	532188967	WASHER *WASHER*	1	-
42	532008883	PEDAL *PEDAL*	1	-
49	596136201	BOLT *BOLT*	1	-
50	532194327	PULLEY	1	-

Ref.	Article N.	Description	Qty	Kit
		PULLEY		
51	873900600	NUT *NUT*	1	-
52	532194326	PULLEY *PULLEY*	1	-
56	592855201	DRIVE BELT *DRIVE BELT*	1	-
64	532197865	SHAFT *SHAFT*	1	-
69	532423303	HAIR PIN COTTER *HAIR PIN COTTER*	1	-
73	596136501	BOLT *BOLT*	1	-
92	595305701	SCREW *SCREW*	1	-
99	582404501	ROD *ROD*	1	-
116	596135701	LOCK NUT *LOCK NUT*	1	-
125	817000512	SCREW *SCREW*	1	-
143	596030701	SCREW *SCREW*	1	-
153	532004497	CLIP *CLIP*	1	-
159	596029501	PIN *PIN*	1	-
161	532105709	SPRING *SPRING*	1	-
163	593861001	ROD *ROD*	1	-
166	532429164	NUT *NUT*	1	-
167	532405257	LATCH *LATCH*	1	-
170	532194322	KEEPER *KEEPER*	1	-
171	596136301	BOLT *BOLT*	1	-
177	587225301	PIN *PIN*	1	-
183	532137057	SPACER *SPACER*	1	-

Ref.	Article N.	Description	Qty	Kit
184	587653701	HANDLE *HANDLE*	1	-
185	872110622	BOLT *BOLT*	1	-
186	532194321	SPACER *SPACER*	1	-
187	596135501	WASHER *WASHER*	1	-
188	582217001	LINK *LINK*	1	-
189	532194317	PLATE *PLATE*	1	-
190	532194318	BELT GUIDE *BELT GUIDE*	1	-
205	532121748	WASHER *WASHER*	1	-
206	532448596	BRACKET *BRACKET*	1	-
207	587031402	LATCH *LATCH*	1	-
208	596564101	GEAR *GEAR*	1	-
209	590527802	ROD *ROD*	1	-
210	532400980	PEDAL ARM *PEDAL ARM*	1	-
211	532120183	BEARING *BEARING*	1	-
213	532403119	CONTROL *CONTROL*	1	-
214	532421263	PAD *PAD*	1	-
215	586606502	PEDAL *PEDAL*	1	-
216	532196131	BRACKET *BRACKET*	1	-
221	532403187	SPRING *SPRING*	1	-
222	879212010	WASHER *WASHER*	1	-
223	598662601	BOLT *BOLT*	1	-
225	532403319	BELT GUIDE	1	-

Ref.	Article N.	Description	Qty	Kit
		BELT GUIDE		
227	596135901	BOLT *BOLT*	1	-
325	585668502	BRACKET *BRACKET*	1	-
326	585670802	BRACKET *BRACKET*	1	-
336	587259602	BOLT *BOLT*	1	-
1	532163465	BATTERY *BATTERY*	1	-
2	874760412	BOLT *BOLT*	1	-
8	587205101	TRAY *TRAY*	1	-
16	532176138	MICRO SWITCH *MICRO SWITCH*	1	-
21	532400252	HARNESS *HARNESS LIGHT*	1	-
22	532004152	BULB *LIGHT BULB*	1	-
24	585555601	CABLE *CABLE*	1	-
25	585555501	CABLE *CABLE*	1	-
26	532175158	FUSE *FUSE*	1	-
27	596133601	LOCK NUT *LOCK NUT*	1	-
28	532416588	CABLE *CABLE*	1	-
29	532192749	SWITCH *SWITCH*	1	-
30	532193350	IGNITION MODULE *IGNITION MODULE*	1	-
33	532411935	KEY *KEY*	1	-
34	532110712	SWITCH *SWITCH*	1	-
40	501133001	HARNESS *HARNESS*	1	-
41	817720408	SCREW *SCREW*	1	-

Ref.	Article N.	Description	Qty	Kit
42	532131563	COVER *COVER*	1	-
43	582042802	SOLENOID *SOLENOID*	1	-
46	594919101	HOUR METER *HOUR METER*	1	-
55	817060512	SCREW *SCREW*	1	-
71	532194276	CABLE ASSY *CABLE ASSY*	1	-
79	532175242	TOOL HOLDER *SOCKET ASM*	1	-
87	532197802	SWITCH *SWITCH*	1	-
90	532435395	TERMINAL COVER *TERMINAL COVER*	1	-
99	817670412	SCREW *SCREW*	1	-
100	596135301	WASHER *WASHER*	1	-
102	532404454	CABLE *CABLE*	1	-
105	532407568	SWITCH *SWITCH*	1	-
1	900000002	DUMMY PART *DUMMY PART*	1	-
2	589818702	MUFFLER *MUFFLER*	1	-
9	596501502	KEEPER *KEEPER*	1	-
12	586728901	PULLEY *PULLEY*	1	-
15	599306004	FUEL TANK ASSY *FUEL TANK ASSY*	1	-
18	585124801	FUEL CAP ASSY *FUEL CAP ASSY*	1	-
18	529989702	CAP *CAP*	1	-
20	532423502	CONTROL *THROTTLE*	1	-
21	596321701	SCREW *SCREW*	1	-
28	532401135	LINE	1	-

Ref.	Article N.	Description	Qty	Kit
		LINE		
29	532137180	SPARK ARRESTER *SPARK ARRESTER*	1	-
37	532123487	HOSE CLAMP *HOSE CLAMP*	1	-
42	596238901	WASHER *WASHER*	1	-
45	596133601	LOCK NUT *LOCK NUT*	1	-
62	532434017	SHIELD *SHIELD*	1	-
69	532165391	GASKET *GASKET*	1	-
70	581881101	TUBE *TUBE*	1	-
71	581881001	TUBE *TUBE*	1	-
79	596134202	SCREW *SCREW*	1	-
81	532148456	TUBE *TUBE*	1	-
82	532428287	PLUG *PLUG*	1	-
84	817060620	SCREW *SCREW*	1	-
85	501606501	BOLT *BOLT*	1	-
90	817000616	SCREW *SCREW*	1	-
91	532187495	BUSHING *BUSHING*	1	-
102	817000512	SCREW *SCREW*	1	-
1	586352301	SERVICE TOOLS *SERVICE TOOLS*	1	-
2	532405507	COVER *COVER*	1	-
3	532405506	COVER *COVER*	1	-
4	596030501	SCREW *SCREW*	1	-
6	532195186	ARM *ARM*	1	-

Ref.	Article N.	Description	Qty	Kit
7	596321701	SCREW *SCREW*	1	-
11	532405380	RIDE ON BLADE *RIDE ON BLADE*	1	-
12	584309301	SCREW *SCREW*	1	-
14	587819701	MANDREL *MANDREL*	1	-
19	532196539	BOLT *BOLT*	1	-
21	596040501	LOCK NUT *LOCK NUT*	1	-
23	532192557	HINGE *HINGE*	1	-
24	532105304	HUB CAP *HUB CAP*	1	-
25	532197026	TORSION SPRING *TORSION SPRING*	1	-
26	532110452	NUT *NUT*	1	-
27	532405357	DEFLECTOR *DEFLECTOR*	1	-
29	595297001	ROD *ROD*	1	-
32	532197473	PULLEY *PULLEY*	1	-
33	596134801	HEXAGON NUT *HEXAGON NUT*	1	-
34	596136101	BOLT *BOLT*	1	-
36	532197379	PULLEY *PULLEY*	1	-
37	596565301	WASHER *WASHER*	1	-
38	589676102	KEEPER *KEEPER*	1	-
40	873900600	NUT *NUT*	1	-
41	584953901	BOLT *BOLT*	1	-
42	532198410	SPRING *SPRING*	1	-
43	532197256	SPRING	1	-

Ref.	Article N.	Description	Qty	Kit
		SPRING		
46	532137729	SCREW *SCREW*	1	-
47	532197250	BRACKET *BRACKET*	1	-
55	532197249	ARM *ARM*	1	-
56	532199092	SPACER *SPACER*	1	-
57	817000616	SCREW *SCREW*	1	-
59	532141043	GUARD *GUARD*	1	-
60	532199471	ARM *ARM*	1	-
63	532199477	ARM *ARM*	1	-
64	532405139	LINKAGE *LINKAGE*	1	-
65	596039401	BOLT *BOLT*	1	-
67	532403012	HANDLE *HANDLE*	1	-
68	532405143	DRIVE BELT *DRIVE BELT*	1	-
69	596136401	BOLT *BOLT*	1	-
70	532199972	CLUTCH ASSY *CLUTCH ASSY*	1	-
113	817000510	BOLT *BOLT*	1	-
116	596434404	BOLT *BOLT*	1	-
117	589527301	WHEEL *WHEEL*	1	-
119	596134901	WASHER *WASHER*	1	-
122	532197258	BELT GUIDE *BELT GUIDE*	1	-
123	532197259	BELT GUIDE *BELT GUIDE*	1	-
144	532199204	BELT GUIDE *BELT GUIDE*	1	-

Ref.	Article N.	Description	Qty	Kit
145	532193197	PULLEY *PULLEY*	1	-
147	532401872	SPRING *SPRING*	1	-
152	584243501	CABLE *CABLE*	1	-
188	593824001	STUD *STUD*	1	-
189	596135701	LOCK NUT *LOCK NUT*	1	-
195	817000612	SCREW *SCREW*	1	-
197	596133201	WASHER *WASHER*	1	-
198	532403149	PLATE *PLATE*	1	-
199	532403150	PLATE *PLATE*	1	-
200	532413524	WASHER *WASHER*	1	-
240	874520636	BOLT *BOLT*	1	-
241	532137729	SCREW *SCREW*	1	-
242	532415598	HOSE COUPLING *HOSE COUPLING*	1	-
243	532416405	COUPLING *COUPLING*	1	-
2	532422027	SHAFT *SHAFT*	1	-
3	594018001	LEVER *LEVER*	1	-
7	580962301	GRIP *GRIP*	1	-
10	532196314	SPRING *SPRING*	1	-
87	532194209	SPRING *SPRING*	1	-
88	532410710	SPRING *SPRING*	1	-
89	819191912	WASHER *WASHER*	1	-
90	532194208	PIN	1	-

Ref.	Article N.	Description	Qty	Kit
		PIN		
91	589464803	LINK ASSY *LINK ASSY*	1	-
97	817000612	SCREW *SCREW*	1	-
98	581506903	LINK ASSY *LINK ASSY*	1	-
100	595305901	NUT *NUT*	1	-
101	532407003	LINK *LINK*	1	-
116	594976501	WASHER *WASHER*	1	-
1	900000002	DUMMY PART *DUMMY PART*	1	-
1	536178101	SEAT *SEAT*	1	-
2	597329902	BRACKET *BRACKET*	1	-
3	590777602	BRACKET *N/A*	1	-
4	536960901	RETAINER *RETAINER*	1	-
6	521996502	NUT *NUT*	1	-
8	532171877	BOLT *BOLT*	1	-
9	597785101	BUMPER *BUMPER*	1	-
19	597783101	KNOB *KNOB*	1	-
21	596240701	BOLT *BOLT*	1	-
30	597781801	BOLT *BOLT*	1	-
37	594944401	NUT *NUT*	1	-
43	597869301	BOLT *BOLT*	1	-
48	536990401	ARM REST KIT *ARM REST KIT*	1	-
50	598001601	SERVICE KIT *SERVICE KIT*	1	-

Ref.	Article N.	Description	Qty	Kit
1	597866101	SERVICE KIT *SERVICE KIT*	1	-
2	532195968	SHAFT *SHAFT*	1	-
4	596873601	SERVICE KIT *SPINDLE*	1	-
5	538691201	SPINDLE *SPINDLE*	1	-
6	532006266	WASHER *WASHER*	1	-
7	532121748	WASHER *WASHER*	1	-
8	812000029	RETAINER RING *RETAINER RING*	1	-
9	532121232	HUB CAP *HUB CAP*	1	-
13	532121749	WASHER *WASHER*	1	-
14	596238701	WASHER *WASHER*	1	-
15	873540600	NUT *NUT*	1	-
16	587016002	SHAFT *SHAFT*	1	-
19	532194729	PLATE *PLATE*	1	-
21	586840201	ADAPTER *ADAPTER*	1	-
22	585029802	BEARING *BEARING*	1	-
26	594949101	CAP *CAP*	1	-
27	596933401	WASHER *WASHER*	1	-
28	817000612	SCREW *SCREW*	1	-
35	532194732	PLATE *PLATE*	1	-
45	587016401	WASHER *WASHER*	1	-
50	873900600	NUT *NUT*	1	-
53	532188967	WASHER	1	-

Ref.	Article N.	Description	Qty	Kit
		WASHER		
57	532407465	BRACKET *BRACKET*	1	-
58	532194747	BOLT *BOLT*	1	-
59	532194748	WASHER *WASHER*	1	-
60	873971000	NUT *NUT*	1	-
61	597070202	LINKAGE *LINKAGE*	1	-
62	597070302	LINKAGE *LINKAGE*	1	-
63	817000512	SCREW *SCREW*	1	-
64	532199849	SPRING RETAINER *SPRING RETAINER*	1	-
66	871020748	BOLT *BOLT*	1	-
67	532194737	BUSHING *BUSHING*	1	-
68	873900700	NUT *NUT*	1	-
69	532199162	WASHER *WASHER*	1	-
70	585338801	BRACKET *BRACKET*	1	-
75	580683701	PINION *PINION*	1	-
76	580683601	SCREW *SCREW*	1	-
122	532444962	CAP *CAP*	1	-
1	532059192	CAP *CAP*	1	-
2	532065139	NIPPLE *NIPPLE*	1	-
3	547005001	WHEEL RIM *WHEEL RIM*	1	-
4	532059904	HOSE *HOSE*	1	-
5	547005101	TIRE *TIRE*	1	-

Ref.	Article N.	Description	Qty	Kit
6	532000278	NIPPLE *NIPPLE*	1	-
7	532009040	BEARING *BEARING*	1	-
8	532175039	HUB CAP *HUB CAP*	1	-
9	547005301	TIRE *TIRE*	1	-
10	532007152	TUBE *TUBE*	1	-
11	547005201	WHEEL RIM *RIM SPROCKET*	1	-
12	576707201	SEALANT *SEALANT*	1	-
1	581579001	DECAL *DECAL*	1	-
2	531229001	DECAL *DECAL*	1	-
3	548219201	DECAL *DECAL*	1	-
4	584904602	DECAL *DECAL*	1	-
5	548074801	DECAL *DECAL*	1	-
6	599966801	DECAL *DECAL*	1	-
7	581724802	DECAL *DECAL*	1	-
8	532439681	PLATE *PAD*	1	-
9	532439682	PAD *PAD*	1	-

STEERING

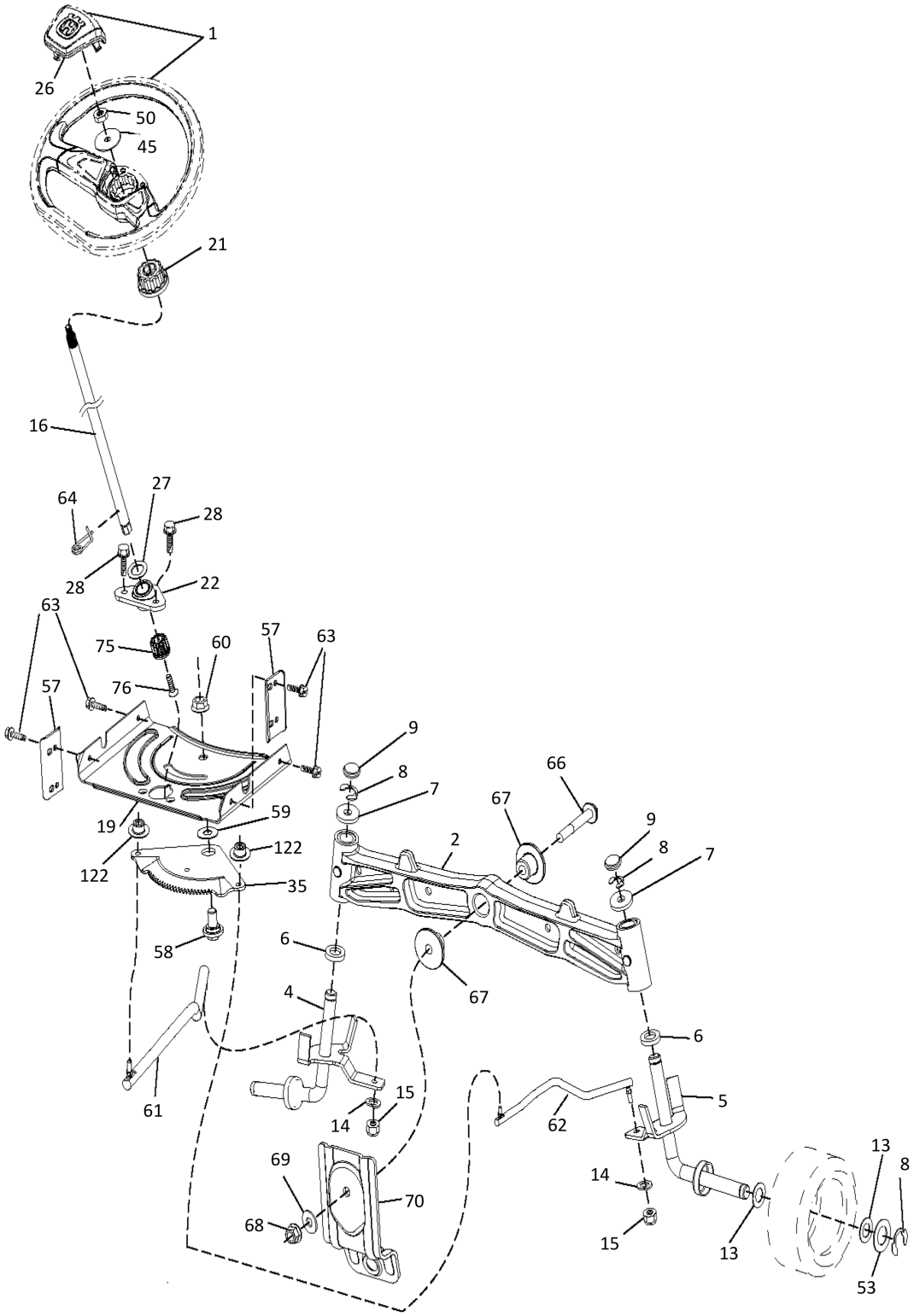

Ref.	Article N.	Description	Qty	Kit
3	597688201	COVER *COVER*	1	-
5	590748818	DASHBOARD *DASHBOARD*	1	-
14	532441177	HOOD *HOOD*	1	-

Ref.	Article N.	Description	Qty	Kit
15	597867801	SERVICE KIT *SERVICE KIT*	1	-
18	597407101	GRILLE *GRILLE*	1	-
34	580910801	CHASSIS *CHASSIS*	1	-
36	817060512	SCREW *SCREW*	1	-
37	532441178	FENDER *FENDER*	1	-
52	596040501	LOCK NUT *LOCK NUT*	1	-
68	596030701	SCREW *SCREW*	1	-
125	581684801	CLIP *CLIP*	1	-
130	596321701	SCREW *SCREW*	1	-
137	532407590	BUMPER *BUMPER*	1	-
146	581857901	BOLT *BOLT*	1	-
150	532439774	AIR DUCT *AIR DUCT*	1	-
151	532436670	BRACKET *BRACKET*	1	-
152	599961102	SHIELD *SHIELD*	1	-
159	817000612	SCREW *SCREW*	1	-
161	532439781	FUEL *FUEL*	1	-
162	596134101	SCREW *SCREW*	1	-
165	532196826	BRACKET *BRACKET*	1	-
175	590607702	CROSS MEMBER *CROSS MEMBER*	1	-
176	532400776	SCREW *SCREW*	1	-
177	532195228	BUSHING *BUSHING*	1	-
180	532195457	CHASSIS	1	-

Ref.	Article N.	Description	Qty	Kit
		CHASSIS		
182	532406859	DASH *DASH*	1	-
183	595305701	SCREW *SCREW*	1	-
189	817000512	SCREW *SCREW*	1	-
194	596135701	LOCK NUT *LOCK NUT*	1	-
195	532404137	PLUG *PLUG*	1	-
199	532413485	PLATE *PLATE*	1	-
202	597867701	SERVICE KIT *SERVICE KIT*	1	-
204	597408001	VENT *VENT*	1	-
205	532439730	TRIM *TRIM*	1	-
206	532439729	TRIM *TRIM*	1	-
213	596030501	SCREW *SCREW*	1	-
214	532199145	CLIP *CLIP*	1	-
217	532409167	ROD *ROD*	1	-
218	532196395	PLATE *PLATE*	1	-
228	593824001	STUD *STUD*	1	-
228	532195161	STUD *STUD*	1	-
235	596564201	SPACER *SPACER*	1	-
236	873930500	NUT *NUT*	1	-
259	596434001	SCREW *SCREW*	1	-
283	532439861	CONSOLE *CONSOLE*	1	-
284	532439823	CONSOLE *CONSOLE*	1	-

Ref.	Article N.	Description	Qty	Kit
285	532416315	CONSOLE *CONSOLE*	1	-
286	532416317	CONSOLE *CONSOLE*	1	-
287	817600406	SCREW *SCREW*	1	-
306	873900600	NUT *NUT*	1	-
335	532448204	COVER *COVER*	1	-
336	532445309	COVER *COVER*	1	-
350	532445143	CLIP *CLIP*	1	-
375	586908201	BUMPER *BUMPER*	1	-
378	590849801	BUSHING *BUSHING*	1	-
379	597334801	BUMPER ASSY *BUMPER ASSY*	1	-
1	900000002	DUMMY PART *DUMMY PART*	1	-
2	532123583	KEY *KEY*	1	-
15	596565301	WASHER *WASHER*	1	-
17	532413678	BRAKE SPRING *BRAKE SPRING*	1	-
26	532199679	SPRING *SPRING*	1	-
29	532403806	ROD *ROD*	1	-
33	812000001	RETAINER RING *RETAINER RING*	1	-
35	590605902	ROD *ROD*	1	-
37	532188967	WASHER *WASHER*	1	-
42	532008883	PEDAL *PEDAL*	1	-
49	596136201	BOLT *BOLT*	1	-
50	532194327	PULLEY	1	-

Ref.	Article N.	Description	Qty	Kit
		PULLEY		
51	873900600	NUT *NUT*	1	-
52	532194326	PULLEY *PULLEY*	1	-
56	592855201	DRIVE BELT *DRIVE BELT*	1	-
64	532197865	SHAFT *SHAFT*	1	-
69	532423303	HAIR PIN COTTER *HAIR PIN COTTER*	1	-
73	596136501	BOLT *BOLT*	1	-
92	595305701	SCREW *SCREW*	1	-
99	582404501	ROD *ROD*	1	-
116	596135701	LOCK NUT *LOCK NUT*	1	-
125	817000512	SCREW *SCREW*	1	-
143	596030701	SCREW *SCREW*	1	-
153	532004497	CLIP *CLIP*	1	-
159	596029501	PIN *PIN*	1	-
161	532105709	SPRING *SPRING*	1	-
163	593861001	ROD *ROD*	1	-
166	532429164	NUT *NUT*	1	-
167	532405257	LATCH *LATCH*	1	-
170	532194322	KEEPER *KEEPER*	1	-
171	596136301	BOLT *BOLT*	1	-
177	587225301	PIN *PIN*	1	-
183	532137057	SPACER *SPACER*	1	-

Ref.	Article N.	Description	Qty	Kit
184	587653701	HANDLE *HANDLE*	1	-
185	872110622	BOLT *BOLT*	1	-
186	532194321	SPACER *SPACER*	1	-
187	596135501	WASHER *WASHER*	1	-
188	582217001	LINK *LINK*	1	-
189	532194317	PLATE *PLATE*	1	-
190	532194318	BELT GUIDE *BELT GUIDE*	1	-
205	532121748	WASHER *WASHER*	1	-
206	532448596	BRACKET *BRACKET*	1	-
207	587031402	LATCH *LATCH*	1	-
208	596564101	GEAR *GEAR*	1	-
209	590527802	ROD *ROD*	1	-
210	532400980	PEDAL ARM *PEDAL ARM*	1	-
211	532120183	BEARING *BEARING*	1	-
213	532403119	CONTROL *CONTROL*	1	-
214	532421263	PAD *PAD*	1	-
215	586606502	PEDAL *PEDAL*	1	-
216	532196131	BRACKET *BRACKET*	1	-
221	532403187	SPRING *SPRING*	1	-
222	879212010	WASHER *WASHER*	1	-
223	598662601	BOLT *BOLT*	1	-
225	532403319	BELT GUIDE	1	-

Ref.	Article N.	Description	Qty	Kit
		BELT GUIDE		
227	596135901	BOLT *BOLT*	1	-
325	585668502	BRACKET *BRACKET*	1	-
326	585670802	BRACKET *BRACKET*	1	-
336	587259602	BOLT *BOLT*	1	-
1	532163465	BATTERY *BATTERY*	1	-
2	874760412	BOLT *BOLT*	1	-
8	587205101	TRAY *TRAY*	1	-
16	532176138	MICRO SWITCH *MICRO SWITCH*	1	-
21	532400252	HARNESS *HARNESS LIGHT*	1	-
22	532004152	BULB *LIGHT BULB*	1	-
24	585555601	CABLE *CABLE*	1	-
25	585555501	CABLE *CABLE*	1	-
26	532175158	FUSE *FUSE*	1	-
27	596133601	LOCK NUT *LOCK NUT*	1	-
28	532416588	CABLE *CABLE*	1	-
29	532192749	SWITCH *SWITCH*	1	-
30	532193350	IGNITION MODULE *IGNITION MODULE*	1	-
33	532411935	KEY *KEY*	1	-
34	532110712	SWITCH *SWITCH*	1	-
40	501133001	HARNESS *HARNESS*	1	-
41	817720408	SCREW *SCREW*	1	-

Ref.	Article N.	Description	Qty	Kit
42	532131563	COVER *COVER*	1	-
43	582042802	SOLENOID *SOLENOID*	1	-
46	594919101	HOUR METER *HOUR METER*	1	-
55	817060512	SCREW *SCREW*	1	-
71	532194276	CABLE ASSY *CABLE ASSY*	1	-
79	532175242	TOOL HOLDER *SOCKET ASM*	1	-
87	532197802	SWITCH *SWITCH*	1	-
90	532435395	TERMINAL COVER *TERMINAL COVER*	1	-
99	817670412	SCREW *SCREW*	1	-
100	596135301	WASHER *WASHER*	1	-
102	532404454	CABLE *CABLE*	1	-
105	532407568	SWITCH *SWITCH*	1	-
1	900000002	DUMMY PART *DUMMY PART*	1	-
2	589818702	MUFFLER *MUFFLER*	1	-
9	596501502	KEEPER *KEEPER*	1	-
12	586728901	PULLEY *PULLEY*	1	-
15	599306004	FUEL TANK ASSY *FUEL TANK ASSY*	1	-
18	585124801	FUEL CAP ASSY *FUEL CAP ASSY*	1	-
18	529989702	CAP *CAP*	1	-
20	532423502	CONTROL *THROTTLE*	1	-
21	596321701	SCREW *SCREW*	1	-
28	532401135	LINE	1	-

Ref.	Article N.	Description	Qty	Kit
		LINE		
29	532137180	SPARK ARRESTER *SPARK ARRESTER*	1	-
37	532123487	HOSE CLAMP *HOSE CLAMP*	1	-
42	596238901	WASHER *WASHER*	1	-
45	596133601	LOCK NUT *LOCK NUT*	1	-
62	532434017	SHIELD *SHIELD*	1	-
69	532165391	GASKET *GASKET*	1	-
70	581881101	TUBE *TUBE*	1	-
71	581881001	TUBE *TUBE*	1	-
79	596134202	SCREW *SCREW*	1	-
81	532148456	TUBE *TUBE*	1	-
82	532428287	PLUG *PLUG*	1	-
84	817060620	SCREW *SCREW*	1	-
85	501606501	BOLT *BOLT*	1	-
90	817000616	SCREW *SCREW*	1	-
91	532187495	BUSHING *BUSHING*	1	-
102	817000512	SCREW *SCREW*	1	-
1	586352301	SERVICE TOOLS *SERVICE TOOLS*	1	-
2	532405507	COVER *COVER*	1	-
3	532405506	COVER *COVER*	1	-
4	596030501	SCREW *SCREW*	1	-
6	532195186	ARM *ARM*	1	-

Ref.	Article N.	Description	Qty	Kit
7	596321701	SCREW *SCREW*	1	-
11	532405380	RIDE ON BLADE *RIDE ON BLADE*	1	-
12	584309301	SCREW *SCREW*	1	-
14	587819701	MANDREL *MANDREL*	1	-
19	532196539	BOLT *BOLT*	1	-
21	596040501	LOCK NUT *LOCK NUT*	1	-
23	532192557	HINGE *HINGE*	1	-
24	532105304	HUB CAP *HUB CAP*	1	-
25	532197026	TORSION SPRING *TORSION SPRING*	1	-
26	532110452	NUT *NUT*	1	-
27	532405357	DEFLECTOR *DEFLECTOR*	1	-
29	595297001	ROD *ROD*	1	-
32	532197473	PULLEY *PULLEY*	1	-
33	596134801	HEXAGON NUT *HEXAGON NUT*	1	-
34	596136101	BOLT *BOLT*	1	-
36	532197379	PULLEY *PULLEY*	1	-
37	596565301	WASHER *WASHER*	1	-
38	589676102	KEEPER *KEEPER*	1	-
40	873900600	NUT *NUT*	1	-
41	584953901	BOLT *BOLT*	1	-
42	532198410	SPRING *SPRING*	1	-
43	532197256	SPRING	1	-

Ref.	Article N.	Description	Qty	Kit
		SPRING		
46	532137729	SCREW *SCREW*	1	-
47	532197250	BRACKET *BRACKET*	1	-
55	532197249	ARM *ARM*	1	-
56	532199092	SPACER *SPACER*	1	-
57	817000616	SCREW *SCREW*	1	-
59	532141043	GUARD *GUARD*	1	-
60	532199471	ARM *ARM*	1	-
63	532199477	ARM *ARM*	1	-
64	532405139	LINKAGE *LINKAGE*	1	-
65	596039401	BOLT *BOLT*	1	-
67	532403012	HANDLE *HANDLE*	1	-
68	532405143	DRIVE BELT *DRIVE BELT*	1	-
69	596136401	BOLT *BOLT*	1	-
70	532199972	CLUTCH ASSY *CLUTCH ASSY*	1	-
113	817000510	BOLT *BOLT*	1	-
116	596434404	BOLT *BOLT*	1	-
117	589527301	WHEEL *WHEEL*	1	-
119	596134901	WASHER *WASHER*	1	-
122	532197258	BELT GUIDE *BELT GUIDE*	1	-
123	532197259	BELT GUIDE *BELT GUIDE*	1	-
144	532199204	BELT GUIDE *BELT GUIDE*	1	-

Ref.	Article N.	Description	Qty	Kit
145	532193197	PULLEY *PULLEY*	1	-
147	532401872	SPRING *SPRING*	1	-
152	584243501	CABLE *CABLE*	1	-
188	593824001	STUD *STUD*	1	-
189	596135701	LOCK NUT *LOCK NUT*	1	-
195	817000612	SCREW *SCREW*	1	-
197	596133201	WASHER *WASHER*	1	-
198	532403149	PLATE *PLATE*	1	-
199	532403150	PLATE *PLATE*	1	-
200	532413524	WASHER *WASHER*	1	-
240	874520636	BOLT *BOLT*	1	-
241	532137729	SCREW *SCREW*	1	-
242	532415598	HOSE COUPLING *HOSE COUPLING*	1	-
243	532416405	COUPLING *COUPLING*	1	-
2	532422027	SHAFT *SHAFT*	1	-
3	594018001	LEVER *LEVER*	1	-
7	580962301	GRIP *GRIP*	1	-
10	532196314	SPRING *SPRING*	1	-
87	532194209	SPRING *SPRING*	1	-
88	532410710	SPRING *SPRING*	1	-
89	819191912	WASHER *WASHER*	1	-
90	532194208	PIN	1	-

Ref.	Article N.	Description	Qty	Kit
		PIN		
91	589464803	LINK ASSY *LINK ASSY*	1	-
97	817000612	SCREW *SCREW*	1	-
98	581506903	LINK ASSY *LINK ASSY*	1	-
100	595305901	NUT *NUT*	1	-
101	532407003	LINK *LINK*	1	-
116	594976501	WASHER *WASHER*	1	-
1	900000002	DUMMY PART *DUMMY PART*	1	-
1	536178101	SEAT *SEAT*	1	-
2	597329902	BRACKET *BRACKET*	1	-
3	590777602	BRACKET *N/A*	1	-
4	536960901	RETAINER *RETAINER*	1	-
6	521996502	NUT *NUT*	1	-
8	532171877	BOLT *BOLT*	1	-
9	597785101	BUMPER *BUMPER*	1	-
19	597783101	KNOB *KNOB*	1	-
21	596240701	BOLT *BOLT*	1	-
30	597781801	BOLT *BOLT*	1	-
37	594944401	NUT *NUT*	1	-
43	597869301	BOLT *BOLT*	1	-
48	536990401	ARM REST KIT *ARM REST KIT*	1	-
50	598001601	SERVICE KIT *SERVICE KIT*	1	-

Ref.	Article N.	Description	Qty	Kit
1	597866101	SERVICE KIT *SERVICE KIT*	1	-
2	532195968	SHAFT *SHAFT*	1	-
4	596873601	SERVICE KIT *SPINDLE*	1	-
5	538691201	SPINDLE *SPINDLE*	1	-
6	532006266	WASHER *WASHER*	1	-
7	532121748	WASHER *WASHER*	1	-
8	812000029	RETAINER RING *RETAINER RING*	1	-
9	532121232	HUB CAP *HUB CAP*	1	-
13	532121749	WASHER *WASHER*	1	-
14	596238701	WASHER *WASHER*	1	-
15	873540600	NUT *NUT*	1	-
16	587016002	SHAFT *SHAFT*	1	-
19	532194729	PLATE *PLATE*	1	-
21	586840201	ADAPTER *ADAPTER*	1	-
22	585029802	BEARING *BEARING*	1	-
26	594949101	CAP *CAP*	1	-
27	596933401	WASHER *WASHER*	1	-
28	817000612	SCREW *SCREW*	1	-
35	532194732	PLATE *PLATE*	1	-
45	587016401	WASHER *WASHER*	1	-
50	873900600	NUT *NUT*	1	-
53	532188967	WASHER	1	-

Ref.	Article N.	Description	Qty	Kit
		WASHER		
57	532407465	BRACKET *BRACKET*	1	-
58	532194747	BOLT *BOLT*	1	-
59	532194748	WASHER *WASHER*	1	-
60	873971000	NUT *NUT*	1	-
61	597070202	LINKAGE *LINKAGE*	1	-
62	597070302	LINKAGE *LINKAGE*	1	-
63	817000512	SCREW *SCREW*	1	-
64	532199849	SPRING RETAINER *SPRING RETAINER*	1	-
66	871020748	BOLT *BOLT*	1	-
67	532194737	BUSHING *BUSHING*	1	-
68	873900700	NUT *NUT*	1	-
69	532199162	WASHER *WASHER*	1	-
70	585338801	BRACKET *BRACKET*	1	-
75	580683701	PINION *PINION*	1	-
76	580683601	SCREW *SCREW*	1	-
122	532444962	CAP *CAP*	1	-
1	532059192	CAP *CAP*	1	-
2	532065139	NIPPLE *NIPPLE*	1	-
3	547005001	WHEEL RIM *WHEEL RIM*	1	-
4	532059904	HOSE *HOSE*	1	-
5	547005101	TIRE *TIRE*	1	-

Ref.	Article N.	Description	Qty	Kit
6	532000278	NIPPLE *NIPPLE*	1	-
7	532009040	BEARING *BEARING*	1	-
8	532175039	HUB CAP *HUB CAP*	1	-
9	547005301	TIRE *TIRE*	1	-
10	532007152	TUBE *TUBE*	1	-
11	547005201	WHEEL RIM *RIM SPROCKET*	1	-
12	576707201	SEALANT *SEALANT*	1	-
1	581579001	DECAL *DECAL*	1	-
2	531229001	DECAL *DECAL*	1	-
3	548219201	DECAL *DECAL*	1	-
4	584904602	DECAL *DECAL*	1	-
5	548074801	DECAL *DECAL*	1	-
6	599966801	DECAL *DECAL*	1	-
7	581724802	DECAL *DECAL*	1	-
8	532439681	PLATE *PAD*	1	-
9	532439682	PAD *PAD*	1	-

WHEELS AND TIRES

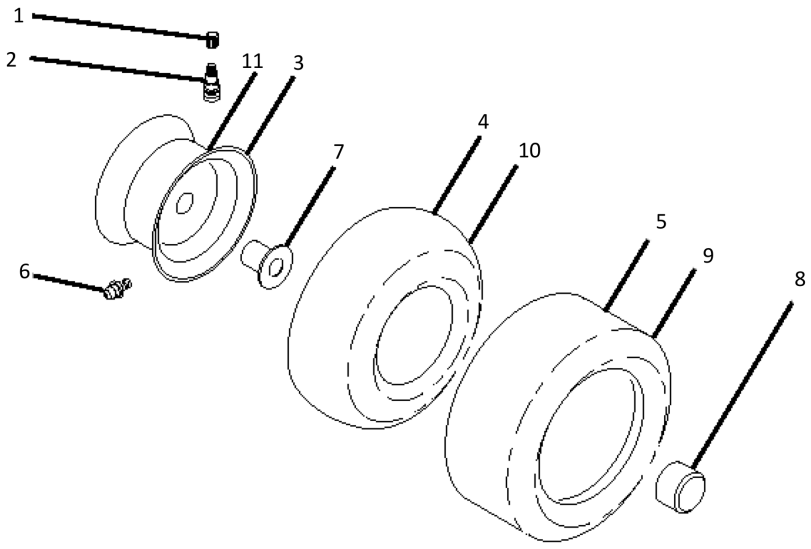

Ref.	Article N.	Description	Qty	Kit
3	597688201	COVER *COVER*	1	-
5	590748818	DASHBOARD *DASHBOARD*	1	-
14	532441177	HOOD *HOOD*	1	-

Ref.	Article N.	Description	Qty	Kit
15	597867801	SERVICE KIT *SERVICE KIT*	1	-
18	597407101	GRILLE *GRILLE*	1	-
34	580910801	CHASSIS *CHASSIS*	1	-
36	817060512	SCREW *SCREW*	1	-
37	532441178	FENDER *FENDER*	1	-
52	596040501	LOCK NUT *LOCK NUT*	1	-
68	596030701	SCREW *SCREW*	1	-
125	581684801	CLIP *CLIP*	1	-
130	596321701	SCREW *SCREW*	1	-
137	532407590	BUMPER *BUMPER*	1	-
146	581857901	BOLT *BOLT*	1	-
150	532439774	AIR DUCT *AIR DUCT*	1	-
151	532436670	BRACKET *BRACKET*	1	-
152	599961102	SHIELD *SHIELD*	1	-
159	817000612	SCREW *SCREW*	1	-
161	532439781	FUEL *FUEL*	1	-
162	596134101	SCREW *SCREW*	1	-
165	532196826	BRACKET *BRACKET*	1	-
175	590607702	CROSS MEMBER *CROSS MEMBER*	1	-
176	532400776	SCREW *SCREW*	1	-
177	532195228	BUSHING *BUSHING*	1	-
180	532195457	CHASSIS	1	-

Ref.	Article N.	Description	Qty	Kit
		CHASSIS		
182	532406859	DASH *DASH*	1	-
183	595305701	SCREW *SCREW*	1	-
189	817000512	SCREW *SCREW*	1	-
194	596135701	LOCK NUT *LOCK NUT*	1	-
195	532404137	PLUG *PLUG*	1	-
199	532413485	PLATE *PLATE*	1	-
202	597867701	SERVICE KIT *SERVICE KIT*	1	-
204	597408001	VENT *VENT*	1	-
205	532439730	TRIM *TRIM*	1	-
206	532439729	TRIM *TRIM*	1	-
213	596030501	SCREW *SCREW*	1	-
214	532199145	CLIP *CLIP*	1	-
217	532409167	ROD *ROD*	1	-
218	532196395	PLATE *PLATE*	1	-
228	593824001	STUD *STUD*	1	-
228	532195161	STUD *STUD*	1	-
235	596564201	SPACER *SPACER*	1	-
236	873930500	NUT *NUT*	1	-
259	596434001	SCREW *SCREW*	1	-
283	532439861	CONSOLE *CONSOLE*	1	-
284	532439823	CONSOLE *CONSOLE*	1	-

Ref.	Article N.	Description	Qty	Kit
285	532416315	CONSOLE *CONSOLE*	1	-
286	532416317	CONSOLE *CONSOLE*	1	-
287	817600406	SCREW *SCREW*	1	-
306	873900600	NUT *NUT*	1	-
335	532448204	COVER *COVER*	1	-
336	532445309	COVER *COVER*	1	-
350	532445143	CLIP *CLIP*	1	-
375	586908201	BUMPER *BUMPER*	1	-
378	590849801	BUSHING *BUSHING*	1	-
379	597334801	BUMPER ASSY *BUMPER ASSY*	1	-
1	900000002	DUMMY PART *DUMMY PART*	1	-
2	532123583	KEY *KEY*	1	-
15	596565301	WASHER *WASHER*	1	-
17	532413678	BRAKE SPRING *BRAKE SPRING*	1	-
26	532199679	SPRING *SPRING*	1	-
29	532403806	ROD *ROD*	1	-
33	812000001	RETAINER RING *RETAINER RING*	1	-
35	590605902	ROD *ROD*	1	-
37	532188967	WASHER *WASHER*	1	-
42	532008883	PEDAL *PEDAL*	1	-
49	596136201	BOLT *BOLT*	1	-
50	532194327	PULLEY	1	-

Ref.	Article N.	Description	Qty	Kit
		PULLEY		
51	873900600	NUT *NUT*	1	-
52	532194326	PULLEY *PULLEY*	1	-
56	592855201	DRIVE BELT *DRIVE BELT*	1	-
64	532197865	SHAFT *SHAFT*	1	-
69	532423303	HAIR PIN COTTER *HAIR PIN COTTER*	1	-
73	596136501	BOLT *BOLT*	1	-
92	595305701	SCREW *SCREW*	1	-
99	582404501	ROD *ROD*	1	-
116	596135701	LOCK NUT *LOCK NUT*	1	-
125	817000512	SCREW *SCREW*	1	-
143	596030701	SCREW *SCREW*	1	-
153	532004497	CLIP *CLIP*	1	-
159	596029501	PIN *PIN*	1	-
161	532105709	SPRING *SPRING*	1	-
163	593861001	ROD *ROD*	1	-
166	532429164	NUT *NUT*	1	-
167	532405257	LATCH *LATCH*	1	-
170	532194322	KEEPER *KEEPER*	1	-
171	596136301	BOLT *BOLT*	1	-
177	587225301	PIN *PIN*	1	-
183	532137057	SPACER *SPACER*	1	-

Ref.	Article N.	Description	Qty	Kit
184	587653701	HANDLE *HANDLE*	1	-
185	872110622	BOLT *BOLT*	1	-
186	532194321	SPACER *SPACER*	1	-
187	596135501	WASHER *WASHER*	1	-
188	582217001	LINK *LINK*	1	-
189	532194317	PLATE *PLATE*	1	-
190	532194318	BELT GUIDE *BELT GUIDE*	1	-
205	532121748	WASHER *WASHER*	1	-
206	532448596	BRACKET *BRACKET*	1	-
207	587031402	LATCH *LATCH*	1	-
208	596564101	GEAR *GEAR*	1	-
209	590527802	ROD *ROD*	1	-
210	532400980	PEDAL ARM *PEDAL ARM*	1	-
211	532120183	BEARING *BEARING*	1	-
213	532403119	CONTROL *CONTROL*	1	-
214	532421263	PAD *PAD*	1	-
215	586606502	PEDAL *PEDAL*	1	-
216	532196131	BRACKET *BRACKET*	1	-
221	532403187	SPRING *SPRING*	1	-
222	879212010	WASHER *WASHER*	1	-
223	598662601	BOLT *BOLT*	1	-
225	532403319	BELT GUIDE	1	-

Ref.	Article N.	Description	Qty	Kit
		BELT GUIDE		
227	596135901	BOLT *BOLT*	1	-
325	585668502	BRACKET *BRACKET*	1	-
326	585670802	BRACKET *BRACKET*	1	-
336	587259602	BOLT *BOLT*	1	-
1	532163465	BATTERY *BATTERY*	1	-
2	874760412	BOLT *BOLT*	1	-
8	587205101	TRAY *TRAY*	1	-
16	532176138	MICRO SWITCH *MICRO SWITCH*	1	-
21	532400252	HARNESS *HARNESS LIGHT*	1	-
22	532004152	BULB *LIGHT BULB*	1	-
24	585555601	CABLE *CABLE*	1	-
25	585555501	CABLE *CABLE*	1	-
26	532175158	FUSE *FUSE*	1	-
27	596133601	LOCK NUT *LOCK NUT*	1	-
28	532416588	CABLE *CABLE*	1	-
29	532192749	SWITCH *SWITCH*	1	-
30	532193350	IGNITION MODULE *IGNITION MODULE*	1	-
33	532411935	KEY *KEY*	1	-
34	532110712	SWITCH *SWITCH*	1	-
40	501133001	HARNESS *HARNESS*	1	-
41	817720408	SCREW *SCREW*	1	-

Ref.	Article N.	Description	Qty	Kit
42	532131563	COVER *COVER*	1	-
43	582042802	SOLENOID *SOLENOID*	1	-
46	594919101	HOUR METER *HOUR METER*	1	-
55	817060512	SCREW *SCREW*	1	-
71	532194276	CABLE ASSY *CABLE ASSY*	1	-
79	532175242	TOOL HOLDER *SOCKET ASM*	1	-
87	532197802	SWITCH *SWITCH*	1	-
90	532435395	TERMINAL COVER *TERMINAL COVER*	1	-
99	817670412	SCREW *SCREW*	1	-
100	596135301	WASHER *WASHER*	1	-
102	532404454	CABLE *CABLE*	1	-
105	532407568	SWITCH *SWITCH*	1	-
1	900000002	DUMMY PART *DUMMY PART*	1	-
2	589818702	MUFFLER *MUFFLER*	1	-
9	596501502	KEEPER *KEEPER*	1	-
12	586728901	PULLEY *PULLEY*	1	-
15	599306004	FUEL TANK ASSY *FUEL TANK ASSY*	1	-
18	585124801	FUEL CAP ASSY *FUEL CAP ASSY*	1	-
18	529989702	CAP *CAP*	1	-
20	532423502	CONTROL *THROTTLE*	1	-
21	596321701	SCREW *SCREW*	1	-
28	532401135	LINE	1	-

Ref.	Article N.	Description	Qty	Kit
		LINE		
29	532137180	SPARK ARRESTER *SPARK ARRESTER*	1	-
37	532123487	HOSE CLAMP *HOSE CLAMP*	1	-
42	596238901	WASHER *WASHER*	1	-
45	596133601	LOCK NUT *LOCK NUT*	1	-
62	532434017	SHIELD *SHIELD*	1	-
69	532165391	GASKET *GASKET*	1	-
70	581881101	TUBE *TUBE*	1	-
71	581881001	TUBE *TUBE*	1	-
79	596134202	SCREW *SCREW*	1	-
81	532148456	TUBE *TUBE*	1	-
82	532428287	PLUG *PLUG*	1	-
84	817060620	SCREW *SCREW*	1	-
85	501606501	BOLT *BOLT*	1	-
90	817000616	SCREW *SCREW*	1	-
91	532187495	BUSHING *BUSHING*	1	-
102	817000512	SCREW *SCREW*	1	-
1	586352301	SERVICE TOOLS *SERVICE TOOLS*	1	-
2	532405507	COVER *COVER*	1	-
3	532405506	COVER *COVER*	1	-
4	596030501	SCREW *SCREW*	1	-
6	532195186	ARM *ARM*	1	-

Ref.	Article N.	Description	Qty	Kit
7	596321701	SCREW *SCREW*	1	-
11	532405380	RIDE ON BLADE *RIDE ON BLADE*	1	-
12	584309301	SCREW *SCREW*	1	-
14	587819701	MANDREL *MANDREL*	1	-
19	532196539	BOLT *BOLT*	1	-
21	596040501	LOCK NUT *LOCK NUT*	1	-
23	532192557	HINGE *HINGE*	1	-
24	532105304	HUB CAP *HUB CAP*	1	-
25	532197026	TORSION SPRING *TORSION SPRING*	1	-
26	532110452	NUT *NUT*	1	-
27	532405357	DEFLECTOR *DEFLECTOR*	1	-
29	595297001	ROD *ROD*	1	-
32	532197473	PULLEY *PULLEY*	1	-
33	596134801	HEXAGON NUT *HEXAGON NUT*	1	-
34	596136101	BOLT *BOLT*	1	-
36	532197379	PULLEY *PULLEY*	1	-
37	596565301	WASHER *WASHER*	1	-
38	589676102	KEEPER *KEEPER*	1	-
40	873900600	NUT *NUT*	1	-
41	584953901	BOLT *BOLT*	1	-
42	532198410	SPRING *SPRING*	1	-
43	532197256	SPRING	1	-

Ref.	Article N.	Description	Qty	Kit
		SPRING		
46	532137729	SCREW *SCREW*	1	-
47	532197250	BRACKET *BRACKET*	1	-
55	532197249	ARM *ARM*	1	-
56	532199092	SPACER *SPACER*	1	-
57	817000616	SCREW *SCREW*	1	-
59	532141043	GUARD *GUARD*	1	-
60	532199471	ARM *ARM*	1	-
63	532199477	ARM *ARM*	1	-
64	532405139	LINKAGE *LINKAGE*	1	-
65	596039401	BOLT *BOLT*	1	-
67	532403012	HANDLE *HANDLE*	1	-
68	532405143	DRIVE BELT *DRIVE BELT*	1	-
69	596136401	BOLT *BOLT*	1	-
70	532199972	CLUTCH ASSY *CLUTCH ASSY*	1	-
113	817000510	BOLT *BOLT*	1	-
116	596434404	BOLT *BOLT*	1	-
117	589527301	WHEEL *WHEEL*	1	-
119	596134901	WASHER *WASHER*	1	-
122	532197258	BELT GUIDE *BELT GUIDE*	1	-
123	532197259	BELT GUIDE *BELT GUIDE*	1	-
144	532199204	BELT GUIDE *BELT GUIDE*	1	-

Ref.	Article N.	Description	Qty	Kit
145	532193197	PULLEY *PULLEY*	1	-
147	532401872	SPRING *SPRING*	1	-
152	584243501	CABLE *CABLE*	1	-
188	593824001	STUD *STUD*	1	-
189	596135701	LOCK NUT *LOCK NUT*	1	-
195	817000612	SCREW *SCREW*	1	-
197	596133201	WASHER *WASHER*	1	-
198	532403149	PLATE *PLATE*	1	-
199	532403150	PLATE *PLATE*	1	-
200	532413524	WASHER *WASHER*	1	-
240	874520636	BOLT *BOLT*	1	-
241	532137729	SCREW *SCREW*	1	-
242	532415598	HOSE COUPLING *HOSE COUPLING*	1	-
243	532416405	COUPLING *COUPLING*	1	-
2	532422027	SHAFT *SHAFT*	1	-
3	594018001	LEVER *LEVER*	1	-
7	580962301	GRIP *GRIP*	1	-
10	532196314	SPRING *SPRING*	1	-
87	532194209	SPRING *SPRING*	1	-
88	532410710	SPRING *SPRING*	1	-
89	819191912	WASHER *WASHER*	1	-
90	532194208	PIN	1	-

Ref.	Article N.	Description	Qty	Kit
		PIN		
91	589464803	LINK ASSY *LINK ASSY*	1	-
97	817000612	SCREW *SCREW*	1	-
98	581506903	LINK ASSY *LINK ASSY*	1	-
100	595305901	NUT *NUT*	1	-
101	532407003	LINK *LINK*	1	-
116	594976501	WASHER *WASHER*	1	-
1	900000002	DUMMY PART *DUMMY PART*	1	-
1	536178101	SEAT *SEAT*	1	-
2	597329902	BRACKET *BRACKET*	1	-
3	590777602	BRACKET *N/A*	1	-
4	536960901	RETAINER *RETAINER*	1	-
6	521996502	NUT *NUT*	1	-
8	532171877	BOLT *BOLT*	1	-
9	597785101	BUMPER *BUMPER*	1	-
19	597783101	KNOB *KNOB*	1	-
21	596240701	BOLT *BOLT*	1	-
30	597781801	BOLT *BOLT*	1	-
37	594944401	NUT *NUT*	1	-
43	597869301	BOLT *BOLT*	1	-
48	536990401	ARM REST KIT *ARM REST KIT*	1	-
50	598001601	SERVICE KIT *SERVICE KIT*	1	-

Ref.	Article N.	Description	Qty	Kit
1	597866101	SERVICE KIT *SERVICE KIT*	1	-
2	532195968	SHAFT *SHAFT*	1	-
4	596873601	SERVICE KIT *SPINDLE*	1	-
5	538691201	SPINDLE *SPINDLE*	1	-
6	532006266	WASHER *WASHER*	1	-
7	532121748	WASHER *WASHER*	1	-
8	812000029	RETAINER RING *RETAINER RING*	1	-
9	532121232	HUB CAP *HUB CAP*	1	-
13	532121749	WASHER *WASHER*	1	-
14	596238701	WASHER *WASHER*	1	-
15	873540600	NUT *NUT*	1	-
16	587016002	SHAFT *SHAFT*	1	-
19	532194729	PLATE *PLATE*	1	-
21	586840201	ADAPTER *ADAPTER*	1	-
22	585029802	BEARING *BEARING*	1	-
26	594949101	CAP *CAP*	1	-
27	596933401	WASHER *WASHER*	1	-
28	817000612	SCREW *SCREW*	1	-
35	532194732	PLATE *PLATE*	1	-
45	587016401	WASHER *WASHER*	1	-
50	873900600	NUT *NUT*	1	-
53	532188967	WASHER	1	-

Ref.	Article N.	Description	Qty	Kit
		WASHER		
57	532407465	BRACKET *BRACKET*	1	-
58	532194747	BOLT *BOLT*	1	-
59	532194748	WASHER *WASHER*	1	-
60	873971000	NUT *NUT*	1	-
61	597070202	LINKAGE *LINKAGE*	1	-
62	597070302	LINKAGE *LINKAGE*	1	-
63	817000512	SCREW *SCREW*	1	-
64	532199849	SPRING RETAINER *SPRING RETAINER*	1	-
66	871020748	BOLT *BOLT*	1	-
67	532194737	BUSHING *BUSHING*	1	-
68	873900700	NUT *NUT*	1	-
69	532199162	WASHER *WASHER*	1	-
70	585338801	BRACKET *BRACKET*	1	-
75	580683701	PINION *PINION*	1	-
76	580683601	SCREW *SCREW*	1	-
122	532444962	CAP *CAP*	1	-
1	532059192	CAP *CAP*	1	-
2	532065139	NIPPLE *NIPPLE*	1	-
3	547005001	WHEEL RIM *WHEEL RIM*	1	-
4	532059904	HOSE *HOSE*	1	-
5	547005101	TIRE *TIRE*	1	-

Ref.	Article N.	Description	Qty	Kit
6	532000278	NIPPLE *NIPPLE*	1	-
7	532009040	BEARING *BEARING*	1	-
8	532175039	HUB CAP *HUB CAP*	1	-
9	547005301	TIRE *TIRE*	1	-
10	532007152	TUBE *TUBE*	1	-
11	547005201	WHEEL RIM *RIM SPROCKET*	1	-
12	576707201	SEALANT *SEALANT*	1	-
1	581579001	DECAL *DECAL*	1	-
2	531229001	DECAL *DECAL*	1	-
3	548219201	DECAL *DECAL*	1	-
4	584904602	DECAL *DECAL*	1	-
5	548074801	DECAL *DECAL*	1	-
6	599966801	DECAL *DECAL*	1	-
7	581724802	DECAL *DECAL*	1	-
8	532439681	PLATE *PAD*	1	-
9	532439682	PAD *PAD*	1	-

DECALS

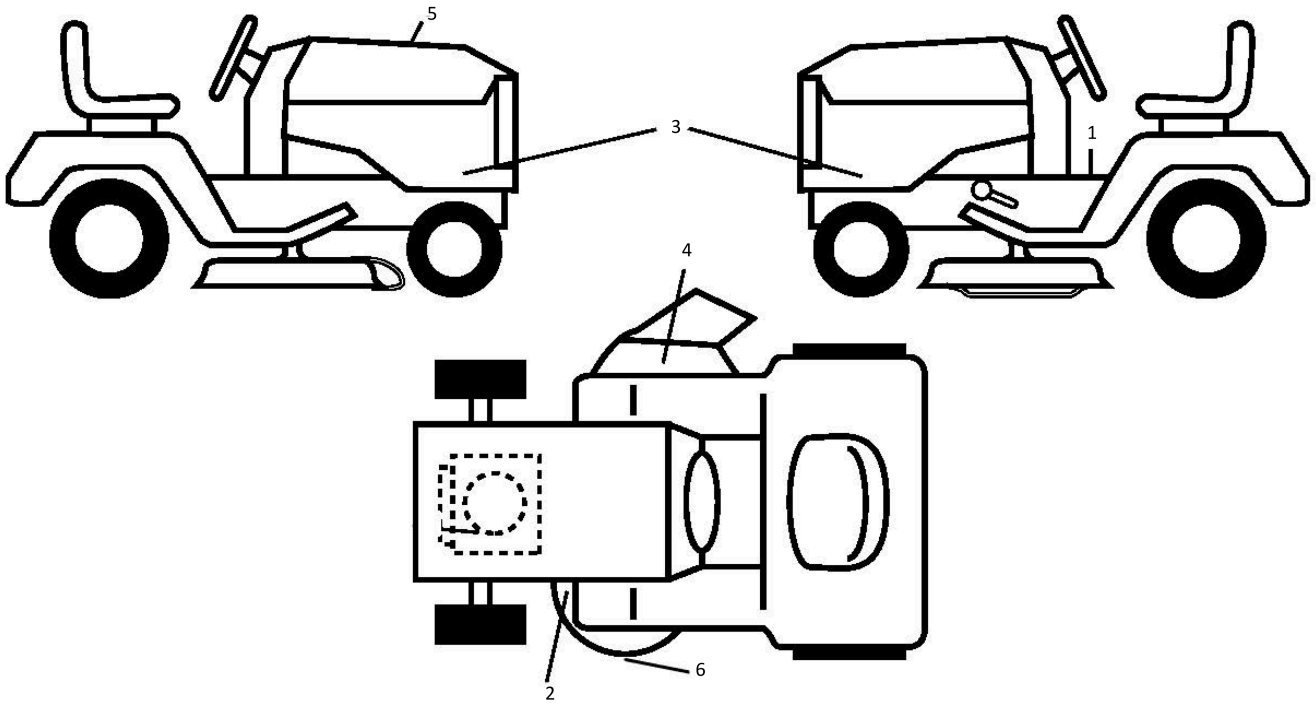

Ref.	Article N.	Description	Qty	Kit
3	597688201	COVER *COVER*	1	-
5	590748818	DASHBOARD *DASHBOARD*	1	-
14	532441177	HOOD *HOOD*	1	-
15	597867801	SERVICE KIT *SERVICE KIT*	1	-
18	597407101	GRILLE *GRILLE*	1	-
34	580910801	CHASSIS *CHASSIS*	1	-
36	817060512	SCREW *SCREW*	1	-
37	532441178	FENDER *FENDER*	1	-
52	596040501	LOCK NUT *LOCK NUT*	1	-
68	596030701	SCREW *SCREW*	1	-
125	581684801	CLIP *CLIP*	1	-
130	596321701	SCREW *SCREW*	1	-

Ref.	Article N.	Description	Qty	Kit
137	532407590	BUMPER *BUMPER*	1	-
146	581857901	BOLT *BOLT*	1	-
150	532439774	AIR DUCT *AIR DUCT*	1	-
151	532436670	BRACKET *BRACKET*	1	-
152	599961102	SHIELD *SHIELD*	1	-
159	817000612	SCREW *SCREW*	1	-
161	532439781	FUEL *FUEL*	1	-
162	596134101	SCREW *SCREW*	1	-
165	532196826	BRACKET *BRACKET*	1	-
175	590607702	CROSS MEMBER *CROSS MEMBER*	1	-
176	532400776	SCREW *SCREW*	1	-
177	532195228	BUSHING *BUSHING*	1	-
180	532195457	CHASSIS *CHASSIS*	1	-
182	532406859	DASH *DASH*	1	-
183	595305701	SCREW *SCREW*	1	-
189	817000512	SCREW *SCREW*	1	-
194	596135701	LOCK NUT *LOCK NUT*	1	-
195	532404137	PLUG *PLUG*	1	-
199	532413485	PLATE *PLATE*	1	-
202	597867701	SERVICE KIT *SERVICE KIT*	1	-
204	597408001	VENT *VENT*	1	-
205	532439730	TRIM	1	-

Ref.	Article N.	Description	Qty	Kit
		TRIM		
206	532439729	TRIM *TRIM*	1	-
213	596030501	SCREW *SCREW*	1	-
214	532199145	CLIP *CLIP*	1	-
217	532409167	ROD *ROD*	1	-
218	532196395	PLATE *PLATE*	1	-
228	593824001	STUD *STUD*	1	-
228	532195161	STUD *STUD*	1	-
235	596564201	SPACER *SPACER*	1	-
236	873930500	NUT *NUT*	1	-
259	596434001	SCREW *SCREW*	1	-
283	532439861	CONSOLE *CONSOLE*	1	-
284	532439823	CONSOLE *CONSOLE*	1	-
285	532416315	CONSOLE *CONSOLE*	1	-
286	532416317	CONSOLE *CONSOLE*	1	-
287	817600406	SCREW *SCREW*	1	-
306	873900600	NUT *NUT*	1	-
335	532448204	COVER *COVER*	1	-
336	532445309	COVER *COVER*	1	-
350	532445143	CLIP *CLIP*	1	-
375	586908201	BUMPER *BUMPER*	1	-
378	590849801	BUSHING *BUSHING*	1	-

Ref.	Article N.	Description	Qty	Kit
379	597334801	BUMPER ASSY *BUMPER ASSY*	1	-
1	900000002	DUMMY PART *DUMMY PART*	1	-
2	532123583	KEY *KEY*	1	-
15	596565301	WASHER *WASHER*	1	-
17	532413678	BRAKE SPRING *BRAKE SPRING*	1	-
26	532199679	SPRING *SPRING*	1	-
29	532403806	ROD *ROD*	1	-
33	812000001	RETAINER RING *RETAINER RING*	1	-
35	590605902	ROD *ROD*	1	-
37	532188967	WASHER *WASHER*	1	-
42	532008883	PEDAL *PEDAL*	1	-
49	596136201	BOLT *BOLT*	1	-
50	532194327	PULLEY *PULLEY*	1	-
51	873900600	NUT *NUT*	1	-
52	532194326	PULLEY *PULLEY*	1	-
56	592855201	DRIVE BELT *DRIVE BELT*	1	-
64	532197865	SHAFT *SHAFT*	1	-
69	532423303	HAIR PIN COTTER *HAIR PIN COTTER*	1	-
73	596136501	BOLT *BOLT*	1	-
92	595305701	SCREW *SCREW*	1	-
99	582404501	ROD *ROD*	1	-
116	596135701	LOCK NUT	1	-

Ref.	Article N.	Description	Qty	Kit
		LOCK NUT		
125	817000512	SCREW *SCREW*	1	-
143	596030701	SCREW *SCREW*	1	-
153	532004497	CLIP *CLIP*	1	-
159	596029501	PIN *PIN*	1	-
161	532105709	SPRING *SPRING*	1	-
163	593861001	ROD *ROD*	1	-
166	532429164	NUT *NUT*	1	-
167	532405257	LATCH *LATCH*	1	-
170	532194322	KEEPER *KEEPER*	1	-
171	596136301	BOLT *BOLT*	1	-
177	587225301	PIN *PIN*	1	-
183	532137057	SPACER *SPACER*	1	-
184	587653701	HANDLE *HANDLE*	1	-
185	872110622	BOLT *BOLT*	1	-
186	532194321	SPACER *SPACER*	1	-
187	596135501	WASHER *WASHER*	1	-
188	582217001	LINK *LINK*	1	-
189	532194317	PLATE *PLATE*	1	-
190	532194318	BELT GUIDE *BELT GUIDE*	1	-
205	532121748	WASHER *WASHER*	1	-
206	532448596	BRACKET *BRACKET*	1	-

Ref.	Article N.	Description	Qty	Kit
207	587031402	LATCH *LATCH*	1	-
208	596564101	GEAR *GEAR*	1	-
209	590527802	ROD *ROD*	1	-
210	532400980	PEDAL ARM *PEDAL ARM*	1	-
211	532120183	BEARING *BEARING*	1	-
213	532403119	CONTROL *CONTROL*	1	-
214	532421263	PAD *PAD*	1	-
215	586606502	PEDAL *PEDAL*	1	-
216	532196131	BRACKET *BRACKET*	1	-
221	532403187	SPRING *SPRING*	1	-
222	879212010	WASHER *WASHER*	1	-
223	598662601	BOLT *BOLT*	1	-
225	532403319	BELT GUIDE *BELT GUIDE*	1	-
227	596135901	BOLT *BOLT*	1	-
325	585668502	BRACKET *BRACKET*	1	-
326	585670802	BRACKET *BRACKET*	1	-
336	587259602	BOLT *BOLT*	1	-
1	532163465	BATTERY *BATTERY*	1	-
2	874760412	BOLT *BOLT*	1	-
8	587205101	TRAY *TRAY*	1	-
16	532176138	MICRO SWITCH *MICRO SWITCH*	1	-
21	532400252	HARNESS	1	-

Ref.	Article N.	Description	Qty	Kit
		HARNESS LIGHT		
22	532004152	BULB *LIGHT BULB*	1	-
24	585555601	CABLE *CABLE*	1	-
25	585555501	CABLE *CABLE*	1	-
26	532175158	FUSE *FUSE*	1	-
27	596133601	LOCK NUT *LOCK NUT*	1	-
28	532416588	CABLE *CABLE*	1	-
29	532192749	SWITCH *SWITCH*	1	-
30	532193350	IGNITION MODULE *IGNITION MODULE*	1	-
33	532411935	KEY *KEY*	1	-
34	532110712	SWITCH *SWITCH*	1	-
40	501133001	HARNESS *HARNESS*	1	-
41	817720408	SCREW *SCREW*	1	-
42	532131563	COVER *COVER*	1	-
43	582042802	SOLENOID *SOLENOID*	1	-
46	594919101	HOUR METER *HOUR METER*	1	-
55	817060512	SCREW *SCREW*	1	-
71	532194276	CABLE ASSY *CABLE ASSY*	1	-
79	532175242	TOOL HOLDER *SOCKET ASM*	1	-
87	532197802	SWITCH *SWITCH*	1	-
90	532435395	TERMINAL COVER *TERMINAL COVER*	1	-
99	817670412	SCREW *SCREW*	1	-

Ref.	Article N.	Description	Qty	Kit
100	596135301	WASHER *WASHER*	1	-
102	532404454	CABLE *CABLE*	1	-
105	532407568	SWITCH *SWITCH*	1	-
1	900000002	DUMMY PART *DUMMY PART*	1	-
2	589818702	MUFFLER *MUFFLER*	1	-
9	596501502	KEEPER *KEEPER*	1	-
12	586728901	PULLEY *PULLEY*	1	-
15	599306004	FUEL TANK ASSY *FUEL TANK ASSY*	1	-
18	585124801	FUEL CAP ASSY *FUEL CAP ASSY*	1	-
18	529989702	CAP *CAP*	1	-
20	532423502	CONTROL *THROTTLE*	1	-
21	596321701	SCREW *SCREW*	1	-
28	532401135	LINE *LINE*	1	-
29	532137180	SPARK ARRESTER *SPARK ARRESTER*	1	-
37	532123487	HOSE CLAMP *HOSE CLAMP*	1	-
42	596238901	WASHER *WASHER*	1	-
45	596133601	LOCK NUT *LOCK NUT*	1	-
62	532434017	SHIELD *SHIELD*	1	-
69	532165391	GASKET *GASKET*	1	-
70	581881101	TUBE *TUBE*	1	-
71	581881001	TUBE *TUBE*	1	-
79	596134202	SCREW	1	-

Ref.	Article N.	Description	Qty	Kit
		SCREW		
81	532148456	TUBE *TUBE*	1	-
82	532428287	PLUG *PLUG*	1	-
84	817060620	SCREW *SCREW*	1	-
85	501606501	BOLT *BOLT*	1	-
90	817000616	SCREW *SCREW*	1	-
91	532187495	BUSHING *BUSHING*	1	-
102	817000512	SCREW *SCREW*	1	-
1	586352301	SERVICE TOOLS *SERVICE TOOLS*	1	-
2	532405507	COVER *COVER*	1	-
3	532405506	COVER *COVER*	1	-
4	596030501	SCREW *SCREW*	1	-
6	532195186	ARM *ARM*	1	-
7	596321701	SCREW *SCREW*	1	-
11	532405380	RIDE ON BLADE *RIDE ON BLADE*	1	-
12	584309301	SCREW *SCREW*	1	-
14	587819701	MANDREL *MANDREL*	1	-
19	532196539	BOLT *BOLT*	1	-
21	596040501	LOCK NUT *LOCK NUT*	1	-
23	532192557	HINGE *HINGE*	1	-
24	532105304	HUB CAP *HUB CAP*	1	-
25	532197026	TORSION SPRING *TORSION SPRING*	1	-

Ref.	Article N.	Description	Qty	Kit
26	532110452	NUT *NUT*	1	-
27	532405357	DEFLECTOR *DEFLECTOR*	1	-
29	595297001	ROD *ROD*	1	-
32	532197473	PULLEY *PULLEY*	1	-
33	596134801	HEXAGON NUT *HEXAGON NUT*	1	-
34	596136101	BOLT *BOLT*	1	-
36	532197379	PULLEY *PULLEY*	1	-
37	596565301	WASHER *WASHER*	1	-
38	589676102	KEEPER *KEEPER*	1	-
40	873900600	NUT *NUT*	1	-
41	584953901	BOLT *BOLT*	1	-
42	532198410	SPRING *SPRING*	1	-
43	532197256	SPRING *SPRING*	1	-
46	532137729	SCREW *SCREW*	1	-
47	532197250	BRACKET *BRACKET*	1	-
55	532197249	ARM *ARM*	1	-
56	532199092	SPACER *SPACER*	1	-
57	817000616	SCREW *SCREW*	1	-
59	532141043	GUARD *GUARD*	1	-
60	532199471	ARM *ARM*	1	-
63	532199477	ARM *ARM*	1	-
64	532405139	LINKAGE	1	-

Ref.	Article N.	Description	Qty	Kit
		LINKAGE		
65	596039401	BOLT *BOLT*	1	-
67	532403012	HANDLE *HANDLE*	1	-
68	532405143	DRIVE BELT *DRIVE BELT*	1	-
69	596136401	BOLT *BOLT*	1	-
70	532199972	CLUTCH ASSY *CLUTCH ASSY*	1	-
113	817000510	BOLT *BOLT*	1	-
116	596434404	BOLT *BOLT*	1	-
117	589527301	WHEEL *WHEEL*	1	-
119	596134901	WASHER *WASHER*	1	-
122	532197258	BELT GUIDE *BELT GUIDE*	1	-
123	532197259	BELT GUIDE *BELT GUIDE*	1	-
144	532199204	BELT GUIDE *BELT GUIDE*	1	-
145	532193197	PULLEY *PULLEY*	1	-
147	532401872	SPRING *SPRING*	1	-
152	584243501	CABLE *CABLE*	1	-
188	593824001	STUD *STUD*	1	-
189	596135701	LOCK NUT *LOCK NUT*	1	-
195	817000612	SCREW *SCREW*	1	-
197	596133201	WASHER *WASHER*	1	-
198	532403149	PLATE *PLATE*	1	-
199	532403150	PLATE *PLATE*	1	-

Ref.	Article N.	Description	Qty	Kit
200	532413524	WASHER *WASHER*	1	-
240	874520636	BOLT *BOLT*	1	-
241	532137729	SCREW *SCREW*	1	-
242	532415598	HOSE COUPLING *HOSE COUPLING*	1	-
243	532416405	COUPLING *COUPLING*	1	-
2	532422027	SHAFT *SHAFT*	1	-
3	594018001	LEVER *LEVER*	1	-
7	580962301	GRIP *GRIP*	1	-
10	532196314	SPRING *SPRING*	1	-
87	532194209	SPRING *SPRING*	1	-
88	532410710	SPRING *SPRING*	1	-
89	819191912	WASHER *WASHER*	1	-
90	532194208	PIN *PIN*	1	-
91	589464803	LINK ASSY *LINK ASSY*	1	-
97	817000612	SCREW *SCREW*	1	-
98	581506903	LINK ASSY *LINK ASSY*	1	-
100	595305901	NUT *NUT*	1	-
101	532407003	LINK *LINK*	1	-
116	594976501	WASHER *WASHER*	1	-
1	900000002	DUMMY PART *DUMMY PART*	1	-
1	536178101	SEAT *SEAT*	1	-
2	597329902	BRACKET	1	-

Ref.	Article N.	Description	Qty	Kit
		BRACKET		
3	590777602	BRACKET *N/A*	1	-
4	536960901	RETAINER *RETAINER*	1	-
6	521996502	NUT *NUT*	1	-
8	532171877	BOLT *BOLT*	1	-
9	597785101	BUMPER *BUMPER*	1	-
19	597783101	KNOB *KNOB*	1	-
21	596240701	BOLT *BOLT*	1	-
30	597781801	BOLT *BOLT*	1	-
37	594944401	NUT *NUT*	1	-
43	597869301	BOLT *BOLT*	1	-
48	536990401	ARM REST KIT *ARM REST KIT*	1	-
50	598001601	SERVICE KIT *SERVICE KIT*	1	-
1	597866101	SERVICE KIT *SERVICE KIT*	1	-
2	532195968	SHAFT *SHAFT*	1	-
4	596873601	SERVICE KIT *SPINDLE*	1	-
5	538691201	SPINDLE *SPINDLE*	1	-
6	532006266	WASHER *WASHER*	1	-
7	532121748	WASHER *WASHER*	1	-
8	812000029	RETAINER RING *RETAINER RING*	1	-
9	532121232	HUB CAP *HUB CAP*	1	-
13	532121749	WASHER *WASHER*	1	-

Ref.	Article N.	Description	Qty	Kit
14	596238701	WASHER *WASHER*	1	-
15	873540600	NUT *NUT*	1	-
16	587016002	SHAFT *SHAFT*	1	-
19	532194729	PLATE *PLATE*	1	-
21	586840201	ADAPTER *ADAPTER*	1	-
22	585029802	BEARING *BEARING*	1	-
26	594949101	CAP *CAP*	1	-
27	596933401	WASHER *WASHER*	1	-
28	817000612	SCREW *SCREW*	1	-
35	532194732	PLATE *PLATE*	1	-
45	587016401	WASHER *WASHER*	1	-
50	873900600	NUT *NUT*	1	-
53	532188967	WASHER *WASHER*	1	-
57	532407465	BRACKET *BRACKET*	1	-
58	532194747	BOLT *BOLT*	1	-
59	532194748	WASHER *WASHER*	1	-
60	873971000	NUT *NUT*	1	-
61	597070202	LINKAGE *LINKAGE*	1	-
62	597070302	LINKAGE *LINKAGE*	1	-
63	817000512	SCREW *SCREW*	1	-
64	532199849	SPRING RETAINER *SPRING RETAINER*	1	-
66	871020748	BOLT	1	-

Ref.	Article N.	Description	Qty	Kit
		BOLT		
67	532194737	BUSHING *BUSHING*	1	-
68	873900700	NUT *NUT*	1	-
69	532199162	WASHER *WASHER*	1	-
70	585338801	BRACKET *BRACKET*	1	-
75	580683701	PINION *PINION*	1	-
76	580683601	SCREW *SCREW*	1	-
122	532444962	CAP *CAP*	1	-
1	532059192	CAP *CAP*	1	-
2	532065139	NIPPLE *NIPPLE*	1	-
3	547005001	WHEEL RIM *WHEEL RIM*	1	-
4	532059904	HOSE *HOSE*	1	-
5	547005101	TIRE *TIRE*	1	-
6	532000278	NIPPLE *NIPPLE*	1	-
7	532009040	BEARING *BEARING*	1	-
8	532175039	HUB CAP *HUB CAP*	1	-
9	547005301	TIRE *TIRE*	1	-
10	532007152	TUBE *TUBE*	1	-
11	547005201	WHEEL RIM *RIM SPROCKET*	1	-
12	576707201	SEALANT *SEALANT*	1	-
1	581579001	DECAL *DECAL*	1	-
2	531229001	DECAL *DECAL*	1	-

Ref.	Article N.	Description	Qty	Kit
3	548219201	DECAL *DECAL*	1	-
4	584904602	DECAL *DECAL*	1	-
5	548074801	DECAL *DECAL*	1	-
6	599966801	DECAL *DECAL*	1	-
7	581724802	DECAL *DECAL*	1	-
8	532439681	PLATE *PAD*	1	-
9	532439682	PAD *PAD*	1	-