CHASSIS \/ FRAME

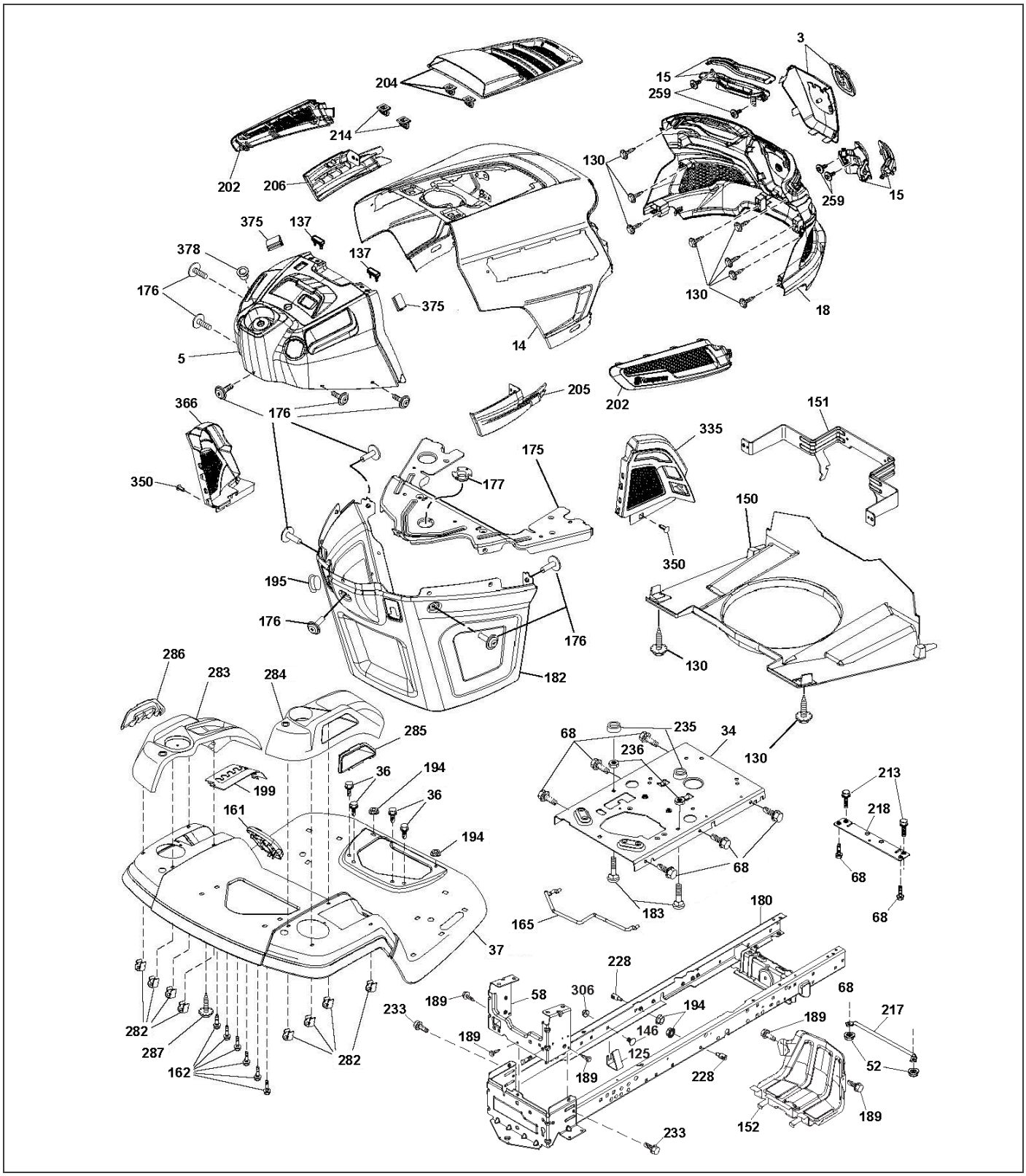

Ref.	Article N.	Description	Qty	Kit
3	597688201	COVER *COVER*	1	-
5	590748811	DASHBOARD *For 96043034100*	1	-
5	590748821	DASHBOARD *For 96043034800*	1	-
14	532441177	HOOD *HOOD*	1	-
15	597867901	SERVICE KIT *SERVICE KIT*	1	-
18	597407102	GRILLE *GRILLE*	1	-
34	580910801	CHASSIS *CHASSIS*	1	-
36	817060512	SCREW *SCREW*	1	-
37	532441178	FENDER *FENDER*	1	-
52	596040501	LOCK NUT *LOCKNUT*	1	-
58	532412280	PLATE *DRAWBAR*	1	-
68	596030701	SCREW *SCREW*	1	-
125	581684801	CLIP *CLIP*	1	-
130	596321701	SCREW *SCREW*	1	-
137	532407590	BUMPER *BUMPER*	1	-
146	581857901	BOLT *BOLT*	1	-
150	532439774	AIR DUCT *AIR DUCT*	1	-
151	532436670	BRACKET *BRACKET*	1	-
152	599961102	SHIELD *SHIELD*	1	-
161	532439781	FUEL *FUEL*	1	-
162	596134101	SCREW *SCREW*	1	-
165	532196826	BRACKET	1	-

Ref.	Article N.	Description	Qty	Kit
		BRACKET		
175	590607702	CROSS MEMBER *CROSS MEMBER*	1	-
176	532400776	SCREW *SCREW*	1	-
177	532195228	BUSHING *BUSHING*	1	-
180	532415063	FRAME *CHASSIS*	1	-
182	532406859	DASH *DASH*	1	-
183	595305701	SCREW *SCREW*	1	-
189	817000512	SCREW *SCREW*	1	-
194	596135701	LOCK NUT *LOCK NUT*	1	-
195	532404137	PLUG *PLUG*	1	-
199	532413485	PLATE *For 96043034100*	1	-
199	596207202	PLATE *For 96043034800*	1	-
202	597867701	SERVICE KIT *SERVICE KIT*	1	-
204	597408001	VENT *VENT*	1	-
205	532439730	TRIM *TRIM*	1	-
206	532439729	TRIM *TRIM*	1	-
213	596030501	SCREW *SCREW*	1	-
214	532199145	CLIP *CLIP*	1	-
217	532409167	ROD *ROD*	1	-
218	532196395	PLATE *PLATE*	1	-
228	593824001	STUD *STUD*	1	-
233	532196539	BOLT *BOLT*	1	-

Ref.	Article N.	Description	Qty	Kit
235	596564201	SPACER *SPACER*	1	-
236	873930500	NUT *NUT*	1	-
259	596434001	SCREW *SCREW*	1	-
282	532414110	CLIP *CLIP*	1	-
283	532439823	CONSOLE *For 96043034100*	1	-
283	596304901	CONSOLE *For 96043034800*	1	-
284	532439861	CONSOLE *For 96043034100*	1	-
284	532439823	CONSOLE *For 96043034800*	1	-
285	532416315	CONSOLE *CONSOLE*	1	-
286	532416317	CONSOLE *CONSOLE*	1	-
287	817600406	SCREW *SCREW*	1	-
306	873900600	NUT *NUT*	1	-
335	532448204	COVER *COVER*	1	-
336	532445309	COVER *COVER*	1	-
350	532445143	CLIP *CLIP*	1	-
375	586908201	BUMPER *BUMPER*	1	-
378	590849801	BUSHING *BUSHING*	1	-
1	581579001	DECAL *DECAL*	1	-
2	531229002	DECAL *DECAL*	1	-
3	546812401	DECAL *DECAL*	1	-
4	581724501	DECAL *DECAL*	1	-
5	599966801	DECAL	1	-

Ref.	Article N.	Description	Qty	Kit
		DECAL		
6	546852001	DECAL *For 96043034100*	1	-
6	548111901	DECAL *For 96043034800*	1	-
7	584904602	DECAL *DECAL*	1	-
8	581724802	DECAL *DECAL*	1	-
9	532439681	PLATE *PAD*	1	-
10	532439682	PAD *PAD*	1	-
1	532426120	TRANSAXLE	1	-
2	532123583	KEY *KEY*	1	-
3	532407287	PULLEY *IDLER*	1	-
15	596565301	WASHER *WASHER*	1	-
17	532413678	BRAKE SPRING *BRAKE SPRING*	1	-
26	532199679	SPRING *SPRING*	1	-
29	532403806	ROD *ROD*	1	-
33	812000001	RETAINER RING *RETAINER RING*	1	-
35	590605902	ROD *ROD*	1	-
37	532188967	WASHER *WASHER*	1	-
42	532008883	PEDAL *PEDAL*	1	-
49	596136201	BOLT *BOLT*	1	-
50	532194327	PULLEY *PULLEY*	1	-
51	873900600	NUT *NUT*	1	-
52	532194326	PULLEY *PULLEY*	1	-
56	592855201	DRIVE BELT	1	-

Ref.	Article N.	Description	Qty	Kit
		BELT		
64	532197865	SHAFT *SHAFT*	1	-
69	532423303	HAIR PIN COTTER *HAIR PIN COTTER*	1	-
73	596136501	BOLT *BOLT*	1	-
92	595305701	SCREW *SCREW*	1	-
99	582404501	ROD *ROD*	1	-
116	596135701	LOCK NUT *LOCK NUT*	1	-
125	817000512	SCREW *SCREW*	1	-
143	596030701	SCREW *SCREW*	1	-
153	532004497	CLIP *CLIP*	1	-
159	596029501	PIN *PIN*	1	-
161	532105709	SPRING *SPRING*	1	-
163	593861001	ROD *ROD*	1	-
166	532429164	NUT *NUT*	1	-
167	532405257	LATCH *LATCH*	1	-
170	532413430	BELT GUIDE *KEEPER*	1	-
177	587225301	PIN *PIN*	1	-
183	532137057	SPACER *SPACER*	1	-
184	587653701	HANDLE *HANDLE*	1	-
185	872110622	BOLT *BOLT*	1	-
186	532194321	SPACER *SPACER*	1	-
187	596135501	WASHER *WASHER*	1	-

Ref.	Article N.	Description	Qty	Kit
188	582217001	LINK *LINK*	1	-
189	532194317	PLATE *PLATE*	1	-
190	532194318	BELT GUIDE *BELT GUIDE*	1	-
196	817000616	SCREW *SCREW*	1	-
197	585658602	BOSS *BOSS*	1	-
205	532121748	WASHER *WASHER*	1	-
206	532448596	BRACKET *BRACKET*	1	-
207	587031402	LATCH *LATCH*	1	-
208	596564101	GEAR *GEAR*	1	-
209	590527802	ROD *ROD*	1	-
210	532400980	PEDAL ARM *PEDAL ARM*	1	-
211	532120183	BEARING *BEARING*	1	-
213	532403119	CONTROL *CONTROL*	1	-
214	532421263	PAD *PAD*	1	-
215	586606502	PEDAL *PEDAL*	1	-
216	532196131	BRACKET *BRACKET*	1	-
221	532403187	SPRING *SPRING*	1	-
222	879212010	WASHER *WASHER*	1	-
223	598662601	BOLT *BOLT*	1	-
225	532403319	BELT GUIDE *BELT GUIDE*	1	-
227	596135901	BOLT *BOLT*	1	-
325	586431203	BRACKET	1	-

Ref.	Article N.	Description	Qty	Kit
		BRACKET		
326	586001103	BRACKET *BRACKET*	1	-
334	585882202	BRACKET *BRACKET*	1	-
336	587259602	BOLT *BOLT*	1	-
1	532163465	BATTERY *BATTERY*	1	-
2	874760412	BOLT *BOLT*	1	-
8	587205101	TRAY *TRAY*	1	-
16	532176138	MICRO SWITCH *MICRO SWITCH*	1	-
21	585436402	HARNESS *HARNESS*	1	-
24	585555601	CABLE *CABLE*	1	-
25	585555501	CABLE *CABLE*	1	-
26	532175158	FUSE *FUSE*	1	-
27	596133601	LOCK NUT *LOCK NUT*	1	-
28	532416588	CABLE *CABLE*	1	-
29	532192749	SWITCH *SWITCH*	1	-
30	532193350	IGNITION MODULE *IGNITION MODULE*	1	-
33	532411935	KEY *KEY*	1	-
34	532110712	SWITCH *SWITCH*	1	-
40	501132901	HARNESS *HARNESS*	1	-
41	817720408	SCREW *SCREW*	1	-
42	532131563	COVER *COVER*	1	-
43	582042802	SOLENOID *SOLENOID*	1	-

Ref.	Article N.	Description	Qty	Kit
46	594919101	HOUR METER *HOUR METER*	1	-
50	582107602	SWITCH *SWITCH*	1	-
55	817060512	SCREW *SCREW*	1	-
71	532194276	CABLE ASSY *CABLE ASSY*	1	-
79	597523001	LIGHT *LIGHT*	1	-
90	532435395	TERMINAL COVER *TERMINAL COVER*	1	-
99	817670412	SCREW *SCREW*	1	-
100	596135301	WASHER *WASHER*	1	-
102	532404454	CABLE *CABLE*	1	-
105	532407568	SWITCH *SWITCH*	1	-
1	900000002	DUMMY PART *ENGINE*	1	-
2	589818702	MUFFLER *MUFFLER*	1	-
9	596501502	KEEPER *KEEPER*	1	-
11	587241601	CLUTCH *CLUTCH*	1	-
12	532405097	PULLEY *PULLEY*	1	-
15	599306004	FUEL TANK ASSY *FUEL TANK*	1	-
18	529989702	CAP *FUEL CAP*	1	-
20	587242504	THROTTLE *THROTTLE*	1	-
21	596321701	SCREW *SCREW*	1	-
28	532401135	LINE *FUEL LINE*	1	-
29	532137180	SPARK ARRESTER *SPARK ARRESTER KIT*	1	-
37	532123487	HOSE CLAMP	1	-

Ref.	Article N.	Description	Qty	Kit
		HOSE CLAMP		
41	532126197	WASHER *WASHER*	1	-
42	596238901	WASHER *WASHER*	1	-
45	596133601	LOCK NUT *LOCKNUT*	1	-
62	532434017	SHIELD *SHIELD*	1	-
69	532165391	GASKET *GASKET*	1	-
70	581881101	TUBE *TUBE.LH*	1	-
71	581881001	TUBE *TUBE. RH*	1	-
79	596134202	SCREW *SCREW*	1	-
81	532148456	TUBE *TUBE*	1	-
82	532428287	PLUG *PLUG*	1	-
84	817060620	SCREW *SCREW*	1	-
85	501606601	BOLT *BOLT*	1	-
90	817000616	SCREW *SCREW*	1	-
91	532187495	BUSHING *BUSHING*	1	-
102	817000512	SCREW *SCREW*	1	-
1	900000002	DUMMY PART *ENGINE MODEL NO. Kawa FR730V-AS40 (546841501)*	1	-
2	589818702	MUFFLER *MUFFLER*	1	-
9	596501502	KEEPER *KEEPER*	1	-
11	587241601	CLUTCH *CLUTCH*	1	-
12	532405097	PULLEY *PULLEY*	1	-
15	599306003	FUEL TANK ASSY *FUEL TANK*	1	-

Ref.	Article N.	Description	Qty	Kit
18	585124801	FUEL CAP ASSY *FUEL CAP ASSY*	1	-
18	529989702	CAP *FUEL CAP ASSY*	1	-
20	532424341	THROTTLE CONTROL *THROTTLE*	1	-
21	532438562	SCREW *SCREW*	1	-
22	532187768	CONTROL *CHOKE*	1	-
28	532401135	LINE *LINE.FUEL.64REAR.EMIS*	1	-
29	532137180	SPARK ARRESTER *SPARK ARRESTER*	1	-
37	532123487	HOSE CLAMP *HOSE CLAMP*	1	-
41	532126197	WASHER *WASHER*	1	-
42	596238901	WASHER *WASHER*	1	-
45	596133601	LOCK NUT *LOCK NUT*	1	-
62	532434017	SHIELD *SHIELD*	1	-
69	532178151	GASKET *GASKET MUFFLER*	1	-
70	583955601	TUBE *TUBE*	1	-
70	583955701	TUBE *TUBE*	1	-
81	532148456	TUBE *TUBE*	1	-
85	501606601	BOLT *BOLT*	1	-
86	532184362	NUT *NUT*	1	-
90	817000616	SCREW *SCREW*	1	-
91	532187495	BUSHING *BUSHING*	1	-
92	817120616	SCREW *SCREW*	1	-
102	817000512	SCREW	1	-

Ref.	Article N.	Description	Qty	Kit
		SCREW		
116	539132624	KNOB *KNOB-SHIFT*	1	-
1	532418229	DECK ASSY *DECK*	1	-
1	532418230	DECK *DECK*	1	-
6	532196066	COVER *COVER*	1	-
7	532197181	COVER *COVER*	1	-
11	532187256	RIDE ON BLADE *BLADE*	1	-
12	532404851	ROD *ROD*	1	-
14	587125401	MANDREL *MANDREL*	1	-
16	596133201	WASHER *WASHER*	1	-
19	532194208	PIN *PIN*	1	-
21	596040501	LOCK NUT *LOCK NUT*	1	-
24	532105304	HUB CAP *HUB CAP*	1	-
25	539107609	SPRING *SPIRNG*	1	-
26	532110452	NUT *NUT*	1	-
27	532187257	DEFLECTOR *DEFLECTOR*	1	-
29	595297001	ROD *ROD*	1	-
32	532173436	PULLEY *PULLEY*	1	-
33	596134801	HEXAGON NUT *HEXAGON NUT*	1	-
34	596322601	NUT *NUT*	1	-
35	584309301	SCREW *SCREW*	1	-
39	532197380	PULLEY *PULLEY*	1	-

Ref.	Article N.	Description	Qty	Kit
41	584953901	BOLT *BOLT*	1	-
43	531169301	SERVICE KIT *SERVICE KIT*	1	-
46	532137729	SCREW *SCREW*	1	-
47	587686701	DRIVE BELT *BELT*	1	-
49	532409149	NUT *NUT*	1	-
50	596136301	BOLT *BOLT*	1	-
52	532196106	PULLEY *PULLEY*	1	-
58	532187342	BAFFLE *BAFFLE*	1	-
59	531168701	SERVICE KIT *SERVICE KIT*	1	-
60	531168801	SERVICE KIT *SERVICE KIT*	1	-
61	585322605	REINFORCEMENT PLATE *REINFORCEMENT PLATE*	1	-
62	585322805	REINFORCEMENT PLATE *REINFORCEMENT PLATE*	1	-
63	596039401	BOLT *BOLT*	1	-
97	532178515	WASHER *WASHER*	1	-
98	532196105	SPRING *SPRING*	1	-
113	596435701	BOLT *BOLT*	1	-
114	532187556	ROD *ROD TENSION RELIEF*	1	-
116	596434404	BOLT *BOLT*	1	-
117	589527301	WHEEL *WHEEL*	1	-
120	596134901	WASHER *WASHER*	1	-
122	532187557	BUSHING *BUSHING*	1	-
184	596135701	LOCK NUT	1	-

Ref.	Article N.	Description	Qty	Kit
		LOCK NUT		
185	873900700	NUT *NUT*	1	-
187	593824001	STUD *STUD*	1	-
189	536050602	LINK	1	-
190	532196539	BOLT *BOLT*	1	-
192	532198468	BELT GUIDE *BELT GUIDE*	1	-
194	874490736	BOLT *BOLT*	1	-
196	596337801	BOLT *BOLT*	1	-
241	532137729	SCREW	1	-
242	532415598	HOSE COUPLING *HOSE COUPLING*	1	-
243	532416405	COUPLING *COUPLING*	1	-
1	900000002	DUMMY PART	1	-
1	536178101	SEAT *SEAT*	1	-
2	597329902	BRACKET *BRACKET*	1	-
3	590777602	BRACKET *BRACKET*	1	-
6	521996502	NUT *NUT*	1	-
8	532171877	BOLT *BOLT*	1	-
9	597785101	BUMPER *BUMPER*	1	-
10	597298202	BRACKET *BRACKET*	1	-
19	597783101	KNOB *KNOB*	1	-
21	596240701	BOLT *BOLT*	1	-
29	536960901	RETAINER *RETAINER*	1	-
30	597781801	BOLT *BOLT*	1	-

Ref.	Article N.	Description	Qty	Kit
37	594944401	NUT *NUT*	1	-
43	597869301	BOLT *BOLT*	1	-
48	536990401	ARM REST KIT *ARM REST KIT*	1	-
1	597866101	SERVICE KIT *SERVICE KIT*	1	-
2	532195968	SHAFT *SHAFT*	1	-
4	536652702	SPINDLE *SPINDLE*	1	-
5	538691201	SPINDLE *SPINDLE*	1	-
6	532006266	WASHER *WASHER*	1	-
7	532121748	WASHER *WASHER*	1	-
8	812000029	RETAINER RING *RETAINER RING*	1	-
9	532121232	HUB CAP *HUB CAP*	1	-
13	532121749	WASHER *WASHER*	1	-
14	596238701	WASHER *WASHER*	1	-
15	873540600	NUT *NUT*	1	-
16	587016002	SHAFT *SHAFT*	1	-
19	532194729	PLATE *PLATE*	1	-
21	586840201	ADAPTER *ADAPTER*	1	-
22	585029802	BEARING *BEARING*	1	-
26	594949101	CAP *CAP*	1	-
27	596933401	WASHER *WASHER*	1	-
28	817000612	SCREW *SCREW*	1	-
35	532194732	PLATE	1	-

Ref.	Article N.	Description	Qty	Kit
		PLATE		
45	587016401	WASHER *WASHER*	1	-
50	873900600	NUT *NUT*	1	-
53	532188967	WASHER *WASHER*	1	-
57	532197246	BRACKET *BRACKET*	1	-
58	532194747	BOLT *BOLT*	1	-
59	532194748	WASHER *WASHER*	1	-
60	873971000	NUT *NUT*	1	-
61	597070202	LINKAGE *LINKAGE*	1	-
62	597070302	LINKAGE *LINKAGE*	1	-
63	817000512	SCREW *SCREW*	1	-
64	532199849	SPRING RETAINER *SPRING RETAINER*	1	-
66	871020748	BOLT *BOLT*	1	-
67	529496302	BUSHING *BUSHING*	1	-
68	873900700	NUT *NUT*	1	-
69	532199162	WASHER *WASHER*	1	-
70	585338801	BRACKET *BRACKET*	1	-
75	580683701	PINION *PINION*	1	-
76	580683601	SCREW *SCREW*	1	-
122	532444962	CAP *CAP*	1	-
1	532059192	CAP *CAP*	1	-
2	532065139	NIPPLE *NIPPLE*	1	-

Ref.	Article N.	Description	Qty	Kit
3	532138336	WHEEL RIM *RIM*	1	-
4	532059904	HOSE *HOSE*	1	-
5	532106222	TIRE *TIRE*	1	-
6	532000278	NIPPLE *NIPPLE*	1	-
7	532009040	BEARING *BEARING*	1	-
8	532175039	HUB CAP *HUB CAP*	1	-
9	532122082	TIRE *TIRE*	1	-
10	532007152	TUBE *TUBE*	1	-
11	532138337	RIM SPROCKET *RIM SPROCKET*	1	-
12	576707201	SEALANT *SEALANT*	1	-
2	532422027	SHAFT *SHAFT*	1	-
3	594018002	LEVER	1	-
7	580962301	GRIP *GRIP*	1	-
10	532196314	SPRING *SPRING*	1	-
87	532194209	SPRING *SPRING*	1	-
88	532410710	SPRING *SPRING*	1	-
89	819191912	WASHER *WASHER*	1	-
90	532194208	PIN *PIN*	1	-
91	589464805	LINK ASSY *LINK ASSY*	1	-
97	817000612	SCREW *SCREW*	1	-
98	581506902	LINK ASSY *LINK ASSY*	1	-
116	594976501	WASHER *WASHER*	1	-

DECALS

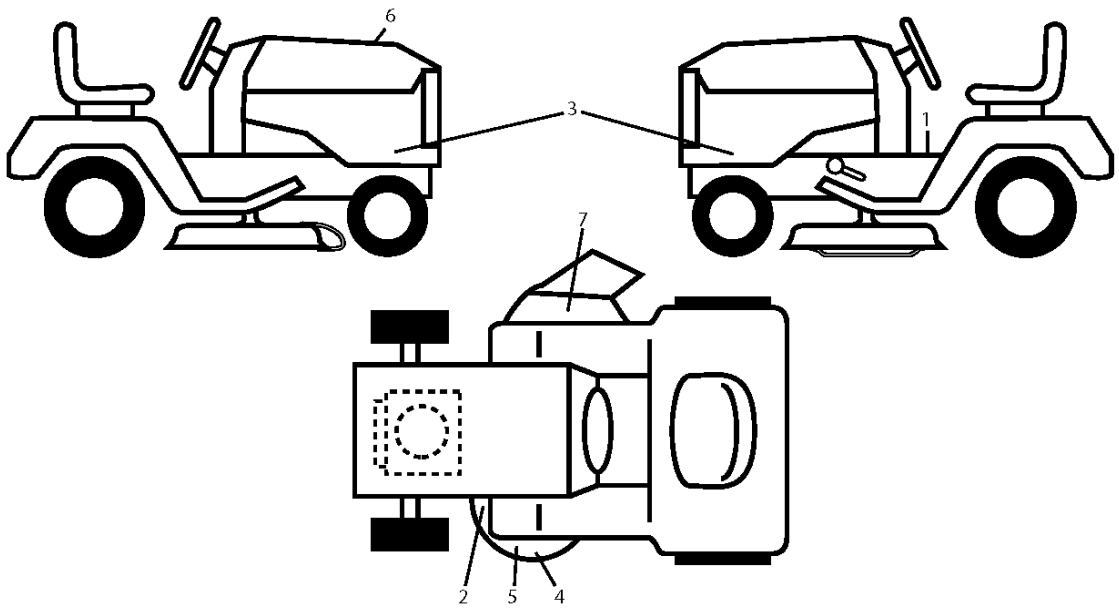

Ref.	Article N.	Description	Qty	Kit
3	597688201	COVER *COVER*	1	-
5	590748811	DASHBOARD *For 96043034100*	1	-
5	590748821	DASHBOARD *For 96043034800*	1	-
14	532441177	HOOD *HOOD*	1	-
15	597867901	SERVICE KIT *SERVICE KIT*	1	-
18	597407102	GRILLE *GRILLE*	1	-
34	580910801	CHASSIS *CHASSIS*	1	-
36	817060512	SCREW *SCREW*	1	-
37	532441178	FENDER *FENDER*	1	-
52	596040501	LOCK NUT *LOCKNUT*	1	-
58	532412280	PLATE *DRAWBAR*	1	-

Ref.	Article N.	Description	Qty	Kit
68	596030701	SCREW *SCREW*	1	-
125	581684801	CLIP *CLIP*	1	-
130	596321701	SCREW *SCREW*	1	-
137	532407590	BUMPER *BUMPER*	1	-
146	581857901	BOLT *BOLT*	1	-
150	532439774	AIR DUCT *AIR DUCT*	1	-
151	532436670	BRACKET *BRACKET*	1	-
152	599961102	SHIELD *SHIELD*	1	-
161	532439781	FUEL *FUEL*	1	-
162	596134101	SCREW *SCREW*	1	-
165	532196826	BRACKET *BRACKET*	1	-
175	590607702	CROSS MEMBER *CROSS MEMBER*	1	-
176	532400776	SCREW *SCREW*	1	-
177	532195228	BUSHING *BUSHING*	1	-
180	532415063	FRAME *CHASSIS*	1	-
182	532406859	DASH *DASH*	1	-
183	595305701	SCREW *SCREW*	1	-
189	817000512	SCREW *SCREW*	1	-
194	596135701	LOCK NUT *LOCK NUT*	1	-
195	532404137	PLUG *PLUG*	1	-
199	532413485	PLATE *For 96043034100*	1	-
199	596207202	PLATE	1	-

Ref.	Article N.	Description	Qty	Kit
		For 96043034800		
202	597867701	SERVICE KIT *SERVICE KIT*	1	-
204	597408001	VENT *VENT*	1	-
205	532439730	TRIM *TRIM*	1	-
206	532439729	TRIM *TRIM*	1	-
213	596030501	SCREW *SCREW*	1	-
214	532199145	CLIP *CLIP*	1	-
217	532409167	ROD *ROD*	1	-
218	532196395	PLATE *PLATE*	1	-
228	593824001	STUD *STUD*	1	-
233	532196539	BOLT *BOLT*	1	-
235	596564201	SPACER *SPACER*	1	-
236	873930500	NUT *NUT*	1	-
259	596434001	SCREW *SCREW*	1	-
282	532414110	CLIP *CLIP*	1	-
283	532439823	CONSOLE *For 96043034100*	1	-
283	596304901	CONSOLE *For 96043034800*	1	-
284	532439861	CONSOLE *For 96043034100*	1	-
284	532439823	CONSOLE *For 96043034800*	1	-
285	532416315	CONSOLE *CONSOLE*	1	-
286	532416317	CONSOLE *CONSOLE*	1	-
287	817600406	SCREW *SCREW*	1	-

Ref.	Article N.	Description	Qty	Kit
306	873900600	NUT *NUT*	1	-
335	532448204	COVER *COVER*	1	-
336	532445309	COVER *COVER*	1	-
350	532445143	CLIP *CLIP*	1	-
375	586908201	BUMPER *BUMPER*	1	-
378	590849801	BUSHING *BUSHING*	1	-
1	581579001	DECAL *DECAL*	1	-
2	531229002	DECAL *DECAL*	1	-
3	546812401	DECAL *DECAL*	1	-
4	581724501	DECAL *DECAL*	1	-
5	599966801	DECAL *DECAL*	1	-
6	546852001	DECAL *For 96043034100*	1	-
6	548111901	DECAL *For 96043034800*	1	-
7	584904602	DECAL *DECAL*	1	-
8	581724802	DECAL *DECAL*	1	-
9	532439681	PLATE *PAD*	1	-
10	532439682	PAD *PAD*	1	-
1	532426120	TRANSAXLE	1	-
2	532123583	KEY *KEY*	1	-
3	532407287	PULLEY *IDLER*	1	-
15	596565301	WASHER *WASHER*	1	-
17	532413678	BRAKE SPRING *BRAKE SPRING*	1	-

Ref.	Article N.	Description	Qty	Kit
26	532199679	SPRING *SPRING*	1	-
29	532403806	ROD *ROD*	1	-
33	812000001	RETAINER RING *RETAINER RING*	1	-
35	590605902	ROD *ROD*	1	-
37	532188967	WASHER *WASHER*	1	-
42	532008883	PEDAL *PEDAL*	1	-
49	596136201	BOLT *BOLT*	1	-
50	532194327	PULLEY *PULLEY*	1	-
51	873900600	NUT *NUT*	1	-
52	532194326	PULLEY *PULLEY*	1	-
56	592855201	DRIVE BELT *BELT*	1	-
64	532197865	SHAFT *SHAFT*	1	-
69	532423303	HAIR PIN COTTER *HAIR PIN COTTER*	1	-
73	596136501	BOLT *BOLT*	1	-
92	595305701	SCREW *SCREW*	1	-
99	582404501	ROD *ROD*	1	-
116	596135701	LOCK NUT *LOCK NUT*	1	-
125	817000512	SCREW *SCREW*	1	-
143	596030701	SCREW *SCREW*	1	-
153	532004497	CLIP *CLIP*	1	-
159	596029501	PIN *PIN*	1	-
161	532105709	SPRING	1	-

Ref.	Article N.	Description	Qty	Kit
		SPRING		
163	593861001	ROD *ROD*	1	-
166	532429164	NUT *NUT*	1	-
167	532405257	LATCH *LATCH*	1	-
170	532413430	BELT GUIDE *KEEPER*	1	-
177	587225301	PIN *PIN*	1	-
183	532137057	SPACER *SPACER*	1	-
184	587653701	HANDLE *HANDLE*	1	-
185	872110622	BOLT *BOLT*	1	-
186	532194321	SPACER *SPACER*	1	-
187	596135501	WASHER *WASHER*	1	-
188	582217001	LINK *LINK*	1	-
189	532194317	PLATE *PLATE*	1	-
190	532194318	BELT GUIDE *BELT GUIDE*	1	-
196	817000616	SCREW *SCREW*	1	-
197	585658602	BOSS *BOSS*	1	-
205	532121748	WASHER *WASHER*	1	-
206	532448596	BRACKET *BRACKET*	1	-
207	587031402	LATCH *LATCH*	1	-
208	596564101	GEAR *GEAR*	1	-
209	590527802	ROD *ROD*	1	-
210	532400980	PEDAL ARM *PEDAL ARM*	1	-

Ref.	Article N.	Description	Qty	Kit
211	532120183	BEARING *BEARING*	1	-
213	532403119	CONTROL *CONTROL*	1	-
214	532421263	PAD *PAD*	1	-
215	586606502	PEDAL *PEDAL*	1	-
216	532196131	BRACKET *BRACKET*	1	-
221	532403187	SPRING *SPRING*	1	-
222	879212010	WASHER *WASHER*	1	-
223	598662601	BOLT *BOLT*	1	-
225	532403319	BELT GUIDE *BELT GUIDE*	1	-
227	596135901	BOLT *BOLT*	1	-
325	586431203	BRACKET *BRACKET*	1	-
326	586001103	BRACKET *BRACKET*	1	-
334	585882202	BRACKET *BRACKET*	1	-
336	587259602	BOLT *BOLT*	1	-
1	532163465	BATTERY *BATTERY*	1	-
2	874760412	BOLT *BOLT*	1	-
8	587205101	TRAY *TRAY*	1	-
16	532176138	MICRO SWITCH *MICRO SWITCH*	1	-
21	585436402	HARNESS *HARNESS*	1	-
24	585555601	CABLE *CABLE*	1	-
25	585555501	CABLE *CABLE*	1	-
26	532175158	FUSE	1	-

Ref.	Article N.	Description	Qty	Kit
		FUSE		
27	596133601	LOCK NUT *LOCK NUT*	1	-
28	532416588	CABLE *CABLE*	1	-
29	532192749	SWITCH *SWITCH*	1	-
30	532193350	IGNITION MODULE *IGNITION MODULE*	1	-
33	532411935	KEY *KEY*	1	-
34	532110712	SWITCH *SWITCH*	1	-
40	501132901	HARNESS *HARNESS*	1	-
41	817720408	SCREW *SCREW*	1	-
42	532131563	COVER *COVER*	1	-
43	582042802	SOLENOID *SOLENOID*	1	-
46	594919101	HOUR METER *HOUR METER*	1	-
50	582107602	SWITCH *SWITCH*	1	-
55	817060512	SCREW *SCREW*	1	-
71	532194276	CABLE ASSY *CABLE ASSY*	1	-
79	597523001	LIGHT *LIGHT*	1	-
90	532435395	TERMINAL COVER *TERMINAL COVER*	1	-
99	817670412	SCREW *SCREW*	1	-
100	596135301	WASHER *WASHER*	1	-
102	532404454	CABLE *CABLE*	1	-
105	532407568	SWITCH *SWITCH*	1	-
1	900000002	DUMMY PART *ENGINE*	1	-

Ref.	Article N.	Description	Qty	Kit
2	589818702	MUFFLER *MUFFLER*	1	-
9	596501502	KEEPER *KEEPER*	1	-
11	587241601	CLUTCH *CLUTCH*	1	-
12	532405097	PULLEY *PULLEY*	1	-
15	599306004	FUEL TANK ASSY *FUEL TANK*	1	-
18	529989702	CAP *FUEL CAP*	1	-
20	587242504	THROTTLE *THROTTLE*	1	-
21	596321701	SCREW *SCREW*	1	-
28	532401135	LINE *FUEL LINE*	1	-
29	532137180	SPARK ARRESTER *SPARK ARRESTER KIT*	1	-
37	532123487	HOSE CLAMP *HOSE CLAMP*	1	-
41	532126197	WASHER *WASHER*	1	-
42	596238901	WASHER *WASHER*	1	-
45	596133601	LOCK NUT *LOCKNUT*	1	-
62	532434017	SHIELD *SHIELD*	1	-
69	532165391	GASKET *GASKET*	1	-
70	581881101	TUBE *TUBE.LH*	1	-
71	581881001	TUBE *TUBE. RH*	1	-
79	596134202	SCREW *SCREW*	1	-
81	532148456	TUBE *TUBE*	1	-
82	532428287	PLUG *PLUG*	1	-
84	817060620	SCREW	1	-

Ref.	Article N.	Description	Qty	Kit
		SCREW		
85	501606601	BOLT *BOLT*	1	-
90	817000616	SCREW *SCREW*	1	-
91	532187495	BUSHING *BUSHING*	1	-
102	817000512	SCREW *SCREW*	1	-
1	900000002	DUMMY PART *ENGINE MODEL NO. Kawa FR730V-AS40 (546841501)*	1	-
2	589818702	MUFFLER *MUFFLER*	1	-
9	596501502	KEEPER *KEEPER*	1	-
11	587241601	CLUTCH *CLUTCH*	1	-
12	532405097	PULLEY *PULLEY*	1	-
15	599306003	FUEL TANK ASSY *FUEL TANK*	1	-
18	585124801	FUEL CAP ASSY *FUEL CAP ASSY*	1	-
18	529989702	CAP *FUEL CAP ASSY*	1	-
20	532424341	THROTTLE CONTROL *THROTTLE*	1	-
21	532438562	SCREW *SCREW*	1	-
22	532187768	CONTROL *CHOKE*	1	-
28	532401135	LINE *LINE.FUEL.64REAR.EMIS*	1	-
29	532137180	SPARK ARRESTER *SPARK ARRESTER*	1	-
37	532123487	HOSE CLAMP *HOSE CLAMP*	1	-
41	532126197	WASHER *WASHER*	1	-
42	596238901	WASHER *WASHER*	1	-
45	596133601	LOCK NUT *LOCK NUT*	1	-

Ref.	Article N.	Description	Qty	Kit
62	532434017	SHIELD *SHIELD*	1	-
69	532178151	GASKET *GASKET MUFFLER*	1	-
70	583955601	TUBE *TUBE*	1	-
70	583955701	TUBE *TUBE*	1	-
81	532148456	TUBE *TUBE*	1	-
85	501606601	BOLT *BOLT*	1	-
86	532184362	NUT *NUT*	1	-
90	817000616	SCREW *SCREW*	1	-
91	532187495	BUSHING *BUSHING*	1	-
92	817120616	SCREW *SCREW*	1	-
102	817000512	SCREW *SCREW*	1	-
116	539132624	KNOB *KNOB-SHIFT*	1	-
1	532418229	DECK ASSY *DECK*	1	-
1	532418230	DECK *DECK*	1	-
6	532196066	COVER *COVER*	1	-
7	532197181	COVER *COVER*	1	-
11	532187256	RIDE ON BLADE *BLADE*	1	-
12	532404851	ROD *ROD*	1	-
14	587125401	MANDREL *MANDREL*	1	-
16	596133201	WASHER *WASHER*	1	-
19	532194208	PIN *PIN*	1	-
21	596040501	LOCK NUT	1	-

Ref.	Article N.	Description	Qty	Kit
		LOCK NUT		
24	532105304	HUB CAP *HUB CAP*	1	-
25	539107609	SPRING *SPIRNG*	1	-
26	532110452	NUT *NUT*	1	-
27	532187257	DEFLECTOR *DEFLECTOR*	1	-
29	595297001	ROD *ROD*	1	-
32	532173436	PULLEY *PULLEY*	1	-
33	596134801	HEXAGON NUT *HEXAGON NUT*	1	-
34	596322601	NUT *NUT*	1	-
35	584309301	SCREW *SCREW*	1	-
39	532197380	PULLEY *PULLEY*	1	-
41	584953901	BOLT *BOLT*	1	-
43	531169301	SERVICE KIT *SERVICE KIT*	1	-
46	532137729	SCREW *SCREW*	1	-
47	587686701	DRIVE BELT *BELT*	1	-
49	532409149	NUT *NUT*	1	-
50	596136301	BOLT *BOLT*	1	-
52	532196106	PULLEY *PULLEY*	1	-
58	532187342	BAFFLE *BAFFLE*	1	-
59	531168701	SERVICE KIT *SERVICE KIT*	1	-
60	531168801	SERVICE KIT *SERVICE KIT*	1	-
61	585322605	REINFORCEMENT PLATE *REINFORCEMENT PLATE*	1	-

Ref.	Article N.	Description	Qty	Kit
62	585322805	REINFORCEMENT PLATE *REINFORCEMENT PLATE*	1	-
63	596039401	BOLT *BOLT*	1	-
97	532178515	WASHER *WASHER*	1	-
98	532196105	SPRING *SPRING*	1	-
113	596435701	BOLT *BOLT*	1	-
114	532187556	ROD *ROD TENSION RELIEF*	1	-
116	596434404	BOLT *BOLT*	1	-
117	589527301	WHEEL *WHEEL*	1	-
120	596134901	WASHER *WASHER*	1	-
122	532187557	BUSHING *BUSHING*	1	-
184	596135701	LOCK NUT *LOCK NUT*	1	-
185	873900700	NUT *NUT*	1	-
187	593824001	STUD *STUD*	1	-
189	536050602	LINK	1	-
190	532196539	BOLT *BOLT*	1	-
192	532198468	BELT GUIDE *BELT GUIDE*	1	-
194	874490736	BOLT *BOLT*	1	-
196	596337801	BOLT *BOLT*	1	-
241	532137729	SCREW	1	-
242	532415598	HOSE COUPLING *HOSE COUPLING*	1	-
243	532416405	COUPLING *COUPLING*	1	-
1	900000002	DUMMY PART	1	-
1	536178101	SEAT *SEAT*	1	-

Ref.	Article N.	Description	Qty	Kit
2	597329902	BRACKET *BRACKET*	1	-
3	590777602	BRACKET *BRACKET*	1	-
6	521996502	NUT *NUT*	1	-
8	532171877	BOLT *BOLT*	1	-
9	597785101	BUMPER *BUMPER*	1	-
10	597298202	BRACKET *BRACKET*	1	-
19	597783101	KNOB *KNOB*	1	-
21	596240701	BOLT *BOLT*	1	-
29	536960901	RETAINER *RETAINER*	1	-
30	597781801	BOLT *BOLT*	1	-
37	594944401	NUT *NUT*	1	-
43	597869301	BOLT *BOLT*	1	-
48	536990401	ARM REST KIT *ARM REST KIT*	1	-
1	597866101	SERVICE KIT *SERVICE KIT*	1	-
2	532195968	SHAFT *SHAFT*	1	-
4	536652702	SPINDLE *SPINDLE*	1	-
5	538691201	SPINDLE *SPINDLE*	1	-
6	532006266	WASHER *WASHER*	1	-
7	532121748	WASHER *WASHER*	1	-
8	812000029	RETAINER RING *RETAINER RING*	1	-
9	532121232	HUB CAP *HUB CAP*	1	-
13	532121749	WASHER	1	-

Ref.	Article N.	Description	Qty	Kit
		WASHER		
14	596238701	WASHER *WASHER*	1	-
15	873540600	NUT *NUT*	1	-
16	587016002	SHAFT *SHAFT*	1	-
19	532194729	PLATE *PLATE*	1	-
21	586840201	ADAPTER *ADAPTER*	1	-
22	585029802	BEARING *BEARING*	1	-
26	594949101	CAP *CAP*	1	-
27	596933401	WASHER *WASHER*	1	-
28	817000612	SCREW *SCREW*	1	-
35	532194732	PLATE *PLATE*	1	-
45	587016401	WASHER *WASHER*	1	-
50	873900600	NUT *NUT*	1	-
53	532188967	WASHER *WASHER*	1	-
57	532197246	BRACKET *BRACKET*	1	-
58	532194747	BOLT *BOLT*	1	-
59	532194748	WASHER *WASHER*	1	-
60	873971000	NUT *NUT*	1	-
61	597070202	LINKAGE *LINKAGE*	1	-
62	597070302	LINKAGE *LINKAGE*	1	-
63	817000512	SCREW *SCREW*	1	-
64	532199849	SPRING RETAINER *SPRING RETAINER*	1	-

Ref.	Article N.	Description	Qty	Kit
66	871020748	BOLT *BOLT*	1	-
67	529496302	BUSHING *BUSHING*	1	-
68	873900700	NUT *NUT*	1	-
69	532199162	WASHER *WASHER*	1	-
70	585338801	BRACKET *BRACKET*	1	-
75	580683701	PINION *PINION*	1	-
76	580683601	SCREW *SCREW*	1	-
122	532444962	CAP *CAP*	1	-
1	532059192	CAP *CAP*	1	-
2	532065139	NIPPLE *NIPPLE*	1	-
3	532138336	WHEEL RIM *RIM*	1	-
4	532059904	HOSE *HOSE*	1	-
5	532106222	TIRE *TIRE*	1	-
6	532000278	NIPPLE *NIPPLE*	1	-
7	532009040	BEARING *BEARING*	1	-
8	532175039	HUB CAP *HUB CAP*	1	-
9	532122082	TIRE *TIRE*	1	-
10	532007152	TUBE *TUBE*	1	-
11	532138337	RIM SPROCKET *RIM SPROCKET*	1	-
12	576707201	SEALANT *SEALANT*	1	-
2	532422027	SHAFT *SHAFT*	1	-
3	594018002	LEVER	1	-

Ref.	Article N.	Description	Qty	Kit
7	580962301	GRIP *GRIP*	1	-
10	532196314	SPRING *SPRING*	1	-
87	532194209	SPRING *SPRING*	1	-
88	532410710	SPRING *SPRING*	1	-
89	819191912	WASHER *WASHER*	1	-
90	532194208	PIN *PIN*	1	-
91	589464805	LINK ASSY *LINK ASSY*	1	-
97	817000612	SCREW *SCREW*	1	-
98	581506902	LINK ASSY *LINK ASSY*	1	-
116	594976501	WASHER *WASHER*	1	-

DRIVE

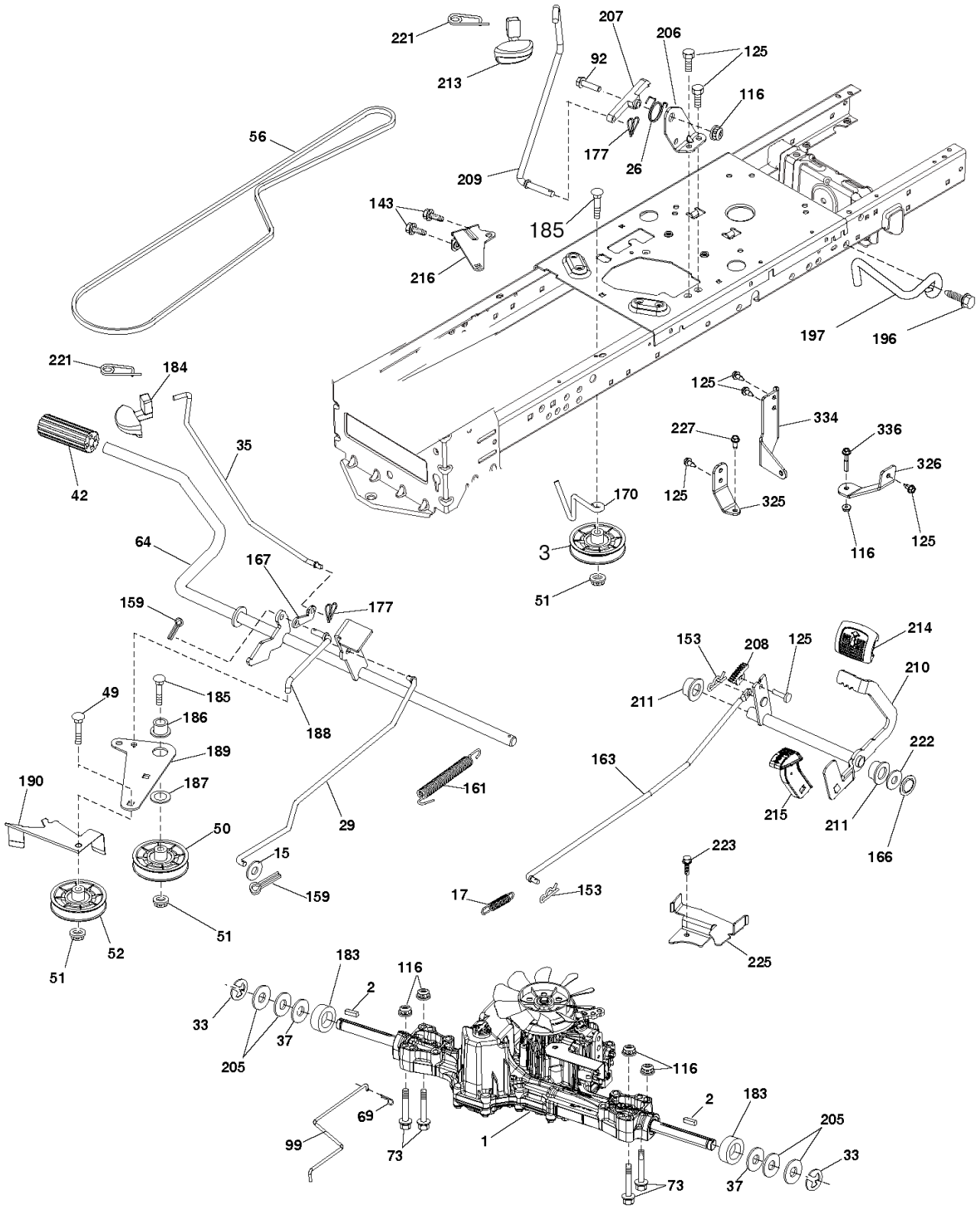

Ref.	Article N.	Description	Qty	Kit
3	597688201	COVER *COVER*	1	-
5	590748811	DASHBOARD *For 96043034100*	1	-
5	590748821	DASHBOARD *For 96043034800*	1	-

Ref.	Article N.	Description	Qty	Kit
14	532441177	HOOD *HOOD*	1	-
15	597867901	SERVICE KIT *SERVICE KIT*	1	-
18	597407102	GRILLE *GRILLE*	1	-
34	580910801	CHASSIS *CHASSIS*	1	-
36	817060512	SCREW *SCREW*	1	-
37	532441178	FENDER *FENDER*	1	-
52	596040501	LOCK NUT *LOCKNUT*	1	-
58	532412280	PLATE *DRAWBAR*	1	-
68	596030701	SCREW *SCREW*	1	-
125	581684801	CLIP *CLIP*	1	-
130	596321701	SCREW *SCREW*	1	-
137	532407590	BUMPER *BUMPER*	1	-
146	581857901	BOLT *BOLT*	1	-
150	532439774	AIR DUCT *AIR DUCT*	1	-
151	532436670	BRACKET *BRACKET*	1	-
152	599961102	SHIELD *SHIELD*	1	-
161	532439781	FUEL *FUEL*	1	-
162	596134101	SCREW *SCREW*	1	-
165	532196826	BRACKET *BRACKET*	1	-
175	590607702	CROSS MEMBER *CROSS MEMBER*	1	-
176	532400776	SCREW *SCREW*	1	-
177	532195228	BUSHING	1	-

Ref.	Article N.	Description	Qty	Kit
		BUSHING		
180	532415063	FRAME *CHASSIS*	1	-
182	532406859	DASH *DASH*	1	-
183	595305701	SCREW *SCREW*	1	-
189	817000512	SCREW *SCREW*	1	-
194	596135701	LOCK NUT *LOCK NUT*	1	-
195	532404137	PLUG *PLUG*	1	-
199	532413485	PLATE *For 96043034100*	1	-
199	596207202	PLATE *For 96043034800*	1	-
202	597867701	SERVICE KIT *SERVICE KIT*	1	-
204	597408001	VENT *VENT*	1	-
205	532439730	TRIM *TRIM*	1	-
206	532439729	TRIM *TRIM*	1	-
213	596030501	SCREW *SCREW*	1	-
214	532199145	CLIP *CLIP*	1	-
217	532409167	ROD *ROD*	1	-
218	532196395	PLATE *PLATE*	1	-
228	593824001	STUD *STUD*	1	-
233	532196539	BOLT *BOLT*	1	-
235	596564201	SPACER *SPACER*	1	-
236	873930500	NUT *NUT*	1	-
259	596434001	SCREW *SCREW*	1	-

Ref.	Article N.	Description	Qty	Kit
282	532414110	CLIP *CLIP*	1	-
283	532439823	CONSOLE *For 96043034100*	1	-
283	596304901	CONSOLE *For 96043034800*	1	-
284	532439861	CONSOLE *For 96043034100*	1	-
284	532439823	CONSOLE *For 96043034800*	1	-
285	532416315	CONSOLE *CONSOLE*	1	-
286	532416317	CONSOLE *CONSOLE*	1	-
287	817600406	SCREW *SCREW*	1	-
306	873900600	NUT *NUT*	1	-
335	532448204	COVER *COVER*	1	-
336	532445309	COVER *COVER*	1	-
350	532445143	CLIP *CLIP*	1	-
375	586908201	BUMPER *BUMPER*	1	-
378	590849801	BUSHING *BUSHING*	1	-
1	581579001	DECAL *DECAL*	1	-
2	531229002	DECAL *DECAL*	1	-
3	546812401	DECAL *DECAL*	1	-
4	581724501	DECAL *DECAL*	1	-
5	599966801	DECAL *DECAL*	1	-
6	546852001	DECAL *For 96043034100*	1	-
6	548111901	DECAL *For 96043034800*	1	-
7	584904602	DECAL	1	-

Ref.	Article N.	Description	Qty	Kit
		DECAL		
8	581724802	DECAL *DECAL*	1	-
9	532439681	PLATE *PAD*	1	-
10	532439682	PAD *PAD*	1	-
1	532426120	TRANSAXLE	1	-
2	532123583	KEY *KEY*	1	-
3	532407287	PULLEY *IDLER*	1	-
15	596565301	WASHER *WASHER*	1	-
17	532413678	BRAKE SPRING *BRAKE SPRING*	1	-
26	532199679	SPRING *SPRING*	1	-
29	532403806	ROD *ROD*	1	-
33	812000001	RETAINER RING *RETAINER RING*	1	-
35	590605902	ROD *ROD*	1	-
37	532188967	WASHER *WASHER*	1	-
42	532008883	PEDAL *PEDAL*	1	-
49	596136201	BOLT *BOLT*	1	-
50	532194327	PULLEY *PULLEY*	1	-
51	873900600	NUT *NUT*	1	-
52	532194326	PULLEY *PULLEY*	1	-
56	592855201	DRIVE BELT *BELT*	1	-
64	532197865	SHAFT *SHAFT*	1	-
69	532423303	HAIR PIN COTTER *HAIR PIN COTTER*	1	-
73	596136501	BOLT	1	-

Ref.	Article N.	Description	Qty	Kit
		BOLT		
92	595305701	SCREW *SCREW*	1	-
99	582404501	ROD *ROD*	1	-
116	596135701	LOCK NUT *LOCK NUT*	1	-
125	817000512	SCREW *SCREW*	1	-
143	596030701	SCREW *SCREW*	1	-
153	532004497	CLIP *CLIP*	1	-
159	596029501	PIN *PIN*	1	-
161	532105709	SPRING *SPRING*	1	-
163	593861001	ROD *ROD*	1	-
166	532429164	NUT *NUT*	1	-
167	532405257	LATCH *LATCH*	1	-
170	532413430	BELT GUIDE *KEEPER*	1	-
177	587225301	PIN *PIN*	1	-
183	532137057	SPACER *SPACER*	1	-
184	587653701	HANDLE *HANDLE*	1	-
185	872110622	BOLT *BOLT*	1	-
186	532194321	SPACER *SPACER*	1	-
187	596135501	WASHER *WASHER*	1	-
188	582217001	LINK *LINK*	1	-
189	532194317	PLATE *PLATE*	1	-
190	532194318	BELT GUIDE *BELT GUIDE*	1	-

Ref.	Article N.	Description	Qty	Kit
196	817000616	SCREW *SCREW*	1	-
197	585658602	BOSS *BOSS*	1	-
205	532121748	WASHER *WASHER*	1	-
206	532448596	BRACKET *BRACKET*	1	-
207	587031402	LATCH *LATCH*	1	-
208	596564101	GEAR *GEAR*	1	-
209	590527802	ROD *ROD*	1	-
210	532400980	PEDAL ARM *PEDAL ARM*	1	-
211	532120183	BEARING *BEARING*	1	-
213	532403119	CONTROL *CONTROL*	1	-
214	532421263	PAD *PAD*	1	-
215	586606502	PEDAL *PEDAL*	1	-
216	532196131	BRACKET *BRACKET*	1	-
221	532403187	SPRING *SPRING*	1	-
222	879212010	WASHER *WASHER*	1	-
223	598662601	BOLT *BOLT*	1	-
225	532403319	BELT GUIDE *BELT GUIDE*	1	-
227	596135901	BOLT *BOLT*	1	-
325	586431203	BRACKET *BRACKET*	1	-
326	586001103	BRACKET *BRACKET*	1	-
334	585882202	BRACKET *BRACKET*	1	-
336	587259602	BOLT	1	-

Ref.	Article N.	Description	Qty	Kit
		BOLT		
1	532163465	BATTERY *BATTERY*	1	-
2	874760412	BOLT *BOLT*	1	-
8	587205101	TRAY *TRAY*	1	-
16	532176138	MICRO SWITCH *MICRO SWITCH*	1	-
21	585436402	HARNESS *HARNESS*	1	-
24	585555601	CABLE *CABLE*	1	-
25	585555501	CABLE *CABLE*	1	-
26	532175158	FUSE *FUSE*	1	-
27	596133601	LOCK NUT *LOCK NUT*	1	-
28	532416588	CABLE *CABLE*	1	-
29	532192749	SWITCH *SWITCH*	1	-
30	532193350	IGNITION MODULE *IGNITION MODULE*	1	-
33	532411935	KEY *KEY*	1	-
34	532110712	SWITCH *SWITCH*	1	-
40	501132901	HARNESS *HARNESS*	1	-
41	817720408	SCREW *SCREW*	1	-
42	532131563	COVER *COVER*	1	-
43	582042802	SOLENOID *SOLENOID*	1	-
46	594919101	HOUR METER *HOUR METER*	1	-
50	582107602	SWITCH *SWITCH*	1	-
55	817060512	SCREW *SCREW*	1	-

Ref.	Article N.	Description	Qty	Kit
71	532194276	CABLE ASSY *CABLE ASSY*	1	-
79	597523001	LIGHT *LIGHT*	1	-
90	532435395	TERMINAL COVER *TERMINAL COVER*	1	-
99	817670412	SCREW *SCREW*	1	-
100	596135301	WASHER *WASHER*	1	-
102	532404454	CABLE *CABLE*	1	-
105	532407568	SWITCH *SWITCH*	1	-
1	900000002	DUMMY PART *ENGINE*	1	-
2	589818702	MUFFLER *MUFFLER*	1	-
9	596501502	KEEPER *KEEPER*	1	-
11	587241601	CLUTCH *CLUTCH*	1	-
12	532405097	PULLEY *PULLEY*	1	-
15	599306004	FUEL TANK ASSY *FUEL TANK*	1	-
18	529989702	CAP *FUEL CAP*	1	-
20	587242504	THROTTLE *THROTTLE*	1	-
21	596321701	SCREW *SCREW*	1	-
28	532401135	LINE *FUEL LINE*	1	-
29	532137180	SPARK ARRESTER *SPARK ARRESTER KIT*	1	-
37	532123487	HOSE CLAMP *HOSE CLAMP*	1	-
41	532126197	WASHER *WASHER*	1	-
42	596238901	WASHER *WASHER*	1	-
45	596133601	LOCK NUT	1	-

Ref.	Article N.	Description	Qty	Kit
		LOCKNUT		
62	532434017	SHIELD *SHIELD*	1	-
69	532165391	GASKET *GASKET*	1	-
70	581881101	TUBE *TUBE.LH*	1	-
71	581881001	TUBE *TUBE. RH*	1	-
79	596134202	SCREW *SCREW*	1	-
81	532148456	TUBE *TUBE*	1	-
82	532428287	PLUG *PLUG*	1	-
84	817060620	SCREW *SCREW*	1	-
85	501606601	BOLT *BOLT*	1	-
90	817000616	SCREW *SCREW*	1	-
91	532187495	BUSHING *BUSHING*	1	-
102	817000512	SCREW *SCREW*	1	-
1	900000002	DUMMY PART *ENGINE MODEL NO. Kawa FR730V-AS40 (546841501)*	1	-
2	589818702	MUFFLER *MUFFLER*	1	-
9	596501502	KEEPER *KEEPER*	1	-
11	587241601	CLUTCH *CLUTCH*	1	-
12	532405097	PULLEY *PULLEY*	1	-
15	599306003	FUEL TANK ASSY *FUEL TANK*	1	-
18	585124801	FUEL CAP ASSY *FUEL CAP ASSY*	1	-
18	529989702	CAP *FUEL CAP ASSY*	1	-
20	532424341	THROTTLE CONTROL *THROTTLE*	1	-

Ref.	Article N.	Description	Qty	Kit
21	532438562	SCREW *SCREW*	1	-
22	532187768	CONTROL *CHOKE*	1	-
28	532401135	LINE *LINE.FUEL.64REAR.EMIS*	1	-
29	532137180	SPARK ARRESTER *SPARK ARRESTER*	1	-
37	532123487	HOSE CLAMP *HOSE CLAMP*	1	-
41	532126197	WASHER *WASHER*	1	-
42	596238901	WASHER *WASHER*	1	-
45	596133601	LOCK NUT *LOCK NUT*	1	-
62	532434017	SHIELD *SHIELD*	1	-
69	532178151	GASKET *GASKET MUFFLER*	1	-
70	583955601	TUBE *TUBE*	1	-
70	583955701	TUBE *TUBE*	1	-
81	532148456	TUBE *TUBE*	1	-
85	501606601	BOLT *BOLT*	1	-
86	532184362	NUT *NUT*	1	-
90	817000616	SCREW *SCREW*	1	-
91	532187495	BUSHING *BUSHING*	1	-
92	817120616	SCREW *SCREW*	1	-
102	817000512	SCREW *SCREW*	1	-
116	539132624	KNOB *KNOB-SHIFT*	1	-
1	532418229	DECK ASSY *DECK*	1	-
1	532418230	DECK	1	-

Ref.	Article N.	Description	Qty	Kit
		DECK		
6	532196066	COVER *COVER*	1	-
7	532197181	COVER *COVER*	1	-
11	532187256	RIDE ON BLADE *BLADE*	1	-
12	532404851	ROD *ROD*	1	-
14	587125401	MANDREL *MANDREL*	1	-
16	596133201	WASHER *WASHER*	1	-
19	532194208	PIN *PIN*	1	-
21	596040501	LOCK NUT *LOCK NUT*	1	-
24	532105304	HUB CAP *HUB CAP*	1	-
25	539107609	SPRING *SPIRNG*	1	-
26	532110452	NUT *NUT*	1	-
27	532187257	DEFLECTOR *DEFLECTOR*	1	-
29	595297001	ROD *ROD*	1	-
32	532173436	PULLEY *PULLEY*	1	-
33	596134801	HEXAGON NUT *HEXAGON NUT*	1	-
34	596322601	NUT *NUT*	1	-
35	584309301	SCREW *SCREW*	1	-
39	532197380	PULLEY *PULLEY*	1	-
41	584953901	BOLT *BOLT*	1	-
43	531169301	SERVICE KIT *SERVICE KIT*	1	-
46	532137729	SCREW *SCREW*	1	-

Ref.	Article N.	Description	Qty	Kit
47	587686701	DRIVE BELT *BELT*	1	-
49	532409149	NUT *NUT*	1	-
50	596136301	BOLT *BOLT*	1	-
52	532196106	PULLEY *PULLEY*	1	-
58	532187342	BAFFLE *BAFFLE*	1	-
59	531168701	SERVICE KIT *SERVICE KIT*	1	-
60	531168801	SERVICE KIT *SERVICE KIT*	1	-
61	585322605	REINFORCEMENT PLATE *REINFORCEMENT PLATE*	1	-
62	585322805	REINFORCEMENT PLATE *REINFORCEMENT PLATE*	1	-
63	596039401	BOLT *BOLT*	1	-
97	532178515	WASHER *WASHER*	1	-
98	532196105	SPRING *SPRING*	1	-
113	596435701	BOLT *BOLT*	1	-
114	532187556	ROD *ROD TENSION RELIEF*	1	-
116	596434404	BOLT *BOLT*	1	-
117	589527301	WHEEL *WHEEL*	1	-
120	596134901	WASHER *WASHER*	1	-
122	532187557	BUSHING *BUSHING*	1	-
184	596135701	LOCK NUT *LOCK NUT*	1	-
185	873900700	NUT *NUT*	1	-
187	593824001	STUD *STUD*	1	-
189	536050602	LINK	1	-

Ref.	Article N.	Description	Qty	Kit
190	532196539	BOLT *BOLT*	1	-
192	532198468	BELT GUIDE *BELT GUIDE*	1	-
194	874490736	BOLT *BOLT*	1	-
196	596337801	BOLT *BOLT*	1	-
241	532137729	SCREW	1	-
242	532415598	HOSE COUPLING *HOSE COUPLING*	1	-
243	532416405	COUPLING *COUPLING*	1	-
1	900000002	DUMMY PART	1	-
1	536178101	SEAT *SEAT*	1	-
2	597329902	BRACKET *BRACKET*	1	-
3	590777602	BRACKET *BRACKET*	1	-
6	521996502	NUT *NUT*	1	-
8	532171877	BOLT *BOLT*	1	-
9	597785101	BUMPER *BUMPER*	1	-
10	597298202	BRACKET *BRACKET*	1	-
19	597783101	KNOB *KNOB*	1	-
21	596240701	BOLT *BOLT*	1	-
29	536960901	RETAINER *RETAINER*	1	-
30	597781801	BOLT *BOLT*	1	-
37	594944401	NUT *NUT*	1	-
43	597869301	BOLT *BOLT*	1	-
48	536990401	ARM REST KIT *ARM REST KIT*	1	-
1	597866101	SERVICE KIT	1	-

Ref.	Article N.	Description	Qty	Kit
		SERVICE KIT		
2	532195968	SHAFT *SHAFT*	1	-
4	536652702	SPINDLE *SPINDLE*	1	-
5	538691201	SPINDLE *SPINDLE*	1	-
6	532006266	WASHER *WASHER*	1	-
7	532121748	WASHER *WASHER*	1	-
8	812000029	RETAINER RING *RETAINER RING*	1	-
9	532121232	HUB CAP *HUB CAP*	1	-
13	532121749	WASHER *WASHER*	1	-
14	596238701	WASHER *WASHER*	1	-
15	873540600	NUT *NUT*	1	-
16	587016002	SHAFT *SHAFT*	1	-
19	532194729	PLATE *PLATE*	1	-
21	586840201	ADAPTER *ADAPTER*	1	-
22	585029802	BEARING *BEARING*	1	-
26	594949101	CAP *CAP*	1	-
27	596933401	WASHER *WASHER*	1	-
28	817000612	SCREW *SCREW*	1	-
35	532194732	PLATE *PLATE*	1	-
45	587016401	WASHER *WASHER*	1	-
50	873900600	NUT *NUT*	1	-
53	532188967	WASHER *WASHER*	1	-

Ref.	Article N.	Description	Qty	Kit
57	532197246	BRACKET *BRACKET*	1	-
58	532194747	BOLT *BOLT*	1	-
59	532194748	WASHER *WASHER*	1	-
60	873971000	NUT *NUT*	1	-
61	597070202	LINKAGE *LINKAGE*	1	-
62	597070302	LINKAGE *LINKAGE*	1	-
63	817000512	SCREW *SCREW*	1	-
64	532199849	SPRING RETAINER *SPRING RETAINER*	1	-
66	871020748	BOLT *BOLT*	1	-
67	529496302	BUSHING *BUSHING*	1	-
68	873900700	NUT *NUT*	1	-
69	532199162	WASHER *WASHER*	1	-
70	585338801	BRACKET *BRACKET*	1	-
75	580683701	PINION *PINION*	1	-
76	580683601	SCREW *SCREW*	1	-
122	532444962	CAP *CAP*	1	-
1	532059192	CAP *CAP*	1	-
2	532065139	NIPPLE *NIPPLE*	1	-
3	532138336	WHEEL RIM *RIM*	1	-
4	532059904	HOSE *HOSE*	1	-
5	532106222	TIRE *TIRE*	1	-
6	532000278	NIPPLE	1	-

Ref.	Article N.	Description	Qty	Kit
		NIPPLE		
7	532009040	BEARING *BEARING*	1	-
8	532175039	HUB CAP *HUB CAP*	1	-
9	532122082	TIRE *TIRE*	1	-
10	532007152	TUBE *TUBE*	1	-
11	532138337	RIM SPROCKET *RIM SPROCKET*	1	-
12	576707201	SEALANT *SEALANT*	1	-
2	532422027	SHAFT *SHAFT*	1	-
3	594018002	LEVER	1	-
7	580962301	GRIP *GRIP*	1	-
10	532196314	SPRING *SPRING*	1	-
87	532194209	SPRING *SPRING*	1	-
88	532410710	SPRING *SPRING*	1	-
89	819191912	WASHER *WASHER*	1	-
90	532194208	PIN *PIN*	1	-
91	589464805	LINK ASSY *LINK ASSY*	1	-
97	817000612	SCREW *SCREW*	1	-
98	581506902	LINK ASSY *LINK ASSY*	1	-
116	594976501	WASHER *WASHER*	1	-

ELECTRICAL

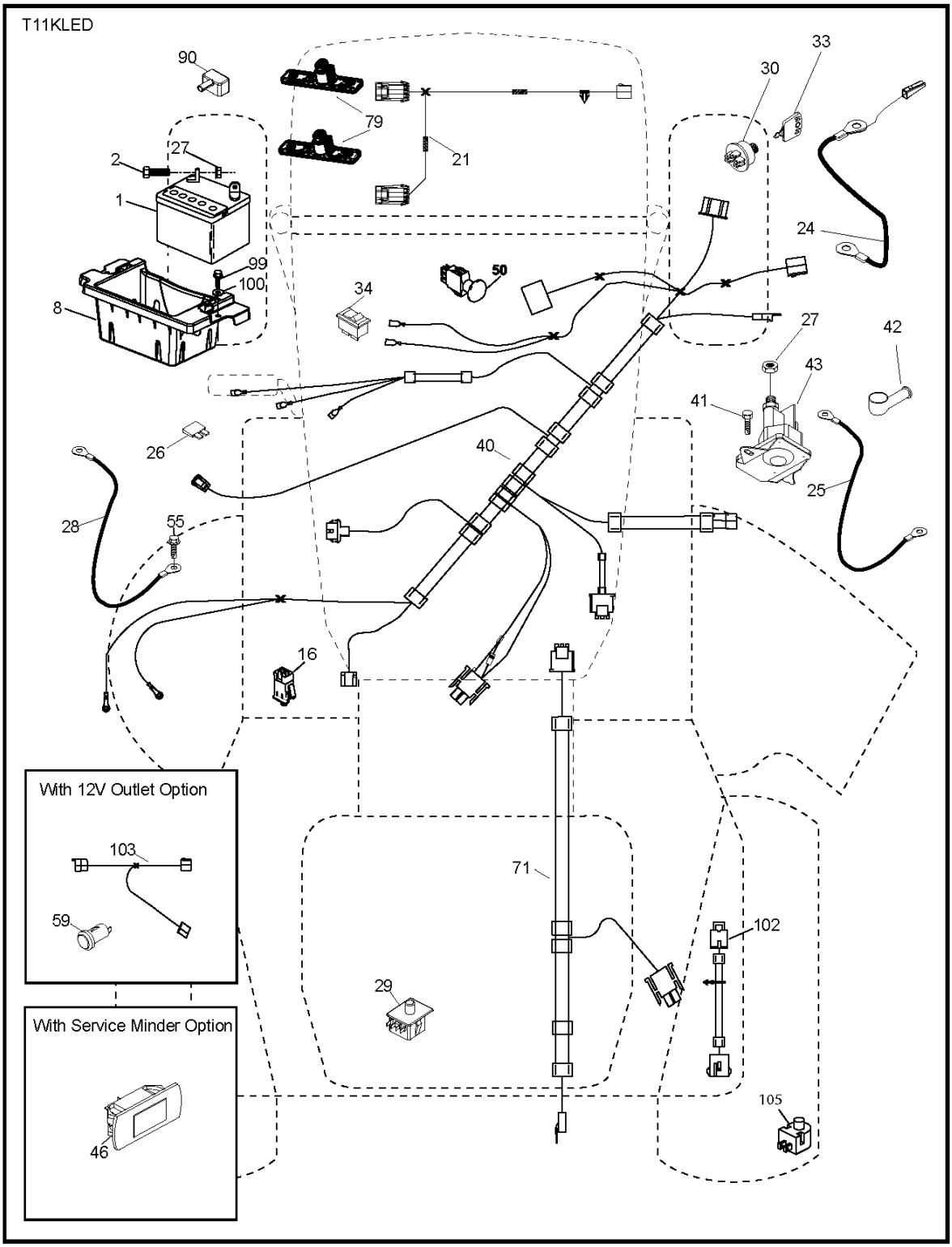

Ref.	Article N.	Description	Qty	Kit
3	597688201	COVER *COVER*	1	-
5	590748811	DASHBOARD *For 96043034100*	1	-
5	590748821	DASHBOARD *For 96043034800*	1	-

Ref.	Article N.	Description	Qty	Kit
14	532441177	HOOD *HOOD*	1	-
15	597867901	SERVICE KIT *SERVICE KIT*	1	-
18	597407102	GRILLE *GRILLE*	1	-
34	580910801	CHASSIS *CHASSIS*	1	-
36	817060512	SCREW *SCREW*	1	-
37	532441178	FENDER *FENDER*	1	-
52	596040501	LOCK NUT *LOCKNUT*	1	-
58	532412280	PLATE *DRAWBAR*	1	-
68	596030701	SCREW *SCREW*	1	-
125	581684801	CLIP *CLIP*	1	-
130	596321701	SCREW *SCREW*	1	-
137	532407590	BUMPER *BUMPER*	1	-
146	581857901	BOLT *BOLT*	1	-
150	532439774	AIR DUCT *AIR DUCT*	1	-
151	532436670	BRACKET *BRACKET*	1	-
152	599961102	SHIELD *SHIELD*	1	-
161	532439781	FUEL *FUEL*	1	-
162	596134101	SCREW *SCREW*	1	-
165	532196826	BRACKET *BRACKET*	1	-
175	590607702	CROSS MEMBER *CROSS MEMBER*	1	-
176	532400776	SCREW *SCREW*	1	-
177	532195228	BUSHING	1	-

Ref.	Article N.	Description	Qty	Kit
		BUSHING		
180	532415063	FRAME *CHASSIS*	1	-
182	532406859	DASH *DASH*	1	-
183	595305701	SCREW *SCREW*	1	-
189	817000512	SCREW *SCREW*	1	-
194	596135701	LOCK NUT *LOCK NUT*	1	-
195	532404137	PLUG *PLUG*	1	-
199	532413485	PLATE *For 96043034100*	1	-
199	596207202	PLATE *For 96043034800*	1	-
202	597867701	SERVICE KIT *SERVICE KIT*	1	-
204	597408001	VENT *VENT*	1	-
205	532439730	TRIM *TRIM*	1	-
206	532439729	TRIM *TRIM*	1	-
213	596030501	SCREW *SCREW*	1	-
214	532199145	CLIP *CLIP*	1	-
217	532409167	ROD *ROD*	1	-
218	532196395	PLATE *PLATE*	1	-
228	593824001	STUD *STUD*	1	-
233	532196539	BOLT *BOLT*	1	-
235	596564201	SPACER *SPACER*	1	-
236	873930500	NUT *NUT*	1	-
259	596434001	SCREW *SCREW*	1	-

Ref.	Article N.	Description	Qty	Kit
282	532414110	CLIP *CLIP*	1	-
283	532439823	CONSOLE *For 96043034100*	1	-
283	596304901	CONSOLE *For 96043034800*	1	-
284	532439861	CONSOLE *For 96043034100*	1	-
284	532439823	CONSOLE *For 96043034800*	1	-
285	532416315	CONSOLE *CONSOLE*	1	-
286	532416317	CONSOLE *CONSOLE*	1	-
287	817600406	SCREW *SCREW*	1	-
306	873900600	NUT *NUT*	1	-
335	532448204	COVER *COVER*	1	-
336	532445309	COVER *COVER*	1	-
350	532445143	CLIP *CLIP*	1	-
375	586908201	BUMPER *BUMPER*	1	-
378	590849801	BUSHING *BUSHING*	1	-
1	581579001	DECAL *DECAL*	1	-
2	531229002	DECAL *DECAL*	1	-
3	546812401	DECAL *DECAL*	1	-
4	581724501	DECAL *DECAL*	1	-
5	599966801	DECAL *DECAL*	1	-
6	546852001	DECAL *For 96043034100*	1	-
6	548111901	DECAL *For 96043034800*	1	-
7	584904602	DECAL	1	-

Ref.	Article N.	Description	Qty	Kit
		DECAL		
8	581724802	DECAL *DECAL*	1	-
9	532439681	PLATE *PAD*	1	-
10	532439682	PAD *PAD*	1	-
1	532426120	TRANSAXLE	1	-
2	532123583	KEY *KEY*	1	-
3	532407287	PULLEY *IDLER*	1	-
15	596565301	WASHER *WASHER*	1	-
17	532413678	BRAKE SPRING *BRAKE SPRING*	1	-
26	532199679	SPRING *SPRING*	1	-
29	532403806	ROD *ROD*	1	-
33	812000001	RETAINER RING *RETAINER RING*	1	-
35	590605902	ROD *ROD*	1	-
37	532188967	WASHER *WASHER*	1	-
42	532008883	PEDAL *PEDAL*	1	-
49	596136201	BOLT *BOLT*	1	-
50	532194327	PULLEY *PULLEY*	1	-
51	873900600	NUT *NUT*	1	-
52	532194326	PULLEY *PULLEY*	1	-
56	592855201	DRIVE BELT *BELT*	1	-
64	532197865	SHAFT *SHAFT*	1	-
69	532423303	HAIR PIN COTTER *HAIR PIN COTTER*	1	-
73	596136501	BOLT	1	-

Ref.	Article N.	Description	Qty	Kit
		BOLT		
92	595305701	SCREW *SCREW*	1	-
99	582404501	ROD *ROD*	1	-
116	596135701	LOCK NUT *LOCK NUT*	1	-
125	817000512	SCREW *SCREW*	1	-
143	596030701	SCREW *SCREW*	1	-
153	532004497	CLIP *CLIP*	1	-
159	596029501	PIN *PIN*	1	-
161	532105709	SPRING *SPRING*	1	-
163	593861001	ROD *ROD*	1	-
166	532429164	NUT *NUT*	1	-
167	532405257	LATCH *LATCH*	1	-
170	532413430	BELT GUIDE *KEEPER*	1	-
177	587225301	PIN *PIN*	1	-
183	532137057	SPACER *SPACER*	1	-
184	587653701	HANDLE *HANDLE*	1	-
185	872110622	BOLT *BOLT*	1	-
186	532194321	SPACER *SPACER*	1	-
187	596135501	WASHER *WASHER*	1	-
188	582217001	LINK *LINK*	1	-
189	532194317	PLATE *PLATE*	1	-
190	532194318	BELT GUIDE *BELT GUIDE*	1	-

Ref.	Article N.	Description	Qty	Kit
196	817000616	SCREW *SCREW*	1	-
197	585658602	BOSS *BOSS*	1	-
205	532121748	WASHER *WASHER*	1	-
206	532448596	BRACKET *BRACKET*	1	-
207	587031402	LATCH *LATCH*	1	-
208	596564101	GEAR *GEAR*	1	-
209	590527802	ROD *ROD*	1	-
210	532400980	PEDAL ARM *PEDAL ARM*	1	-
211	532120183	BEARING *BEARING*	1	-
213	532403119	CONTROL *CONTROL*	1	-
214	532421263	PAD *PAD*	1	-
215	586606502	PEDAL *PEDAL*	1	-
216	532196131	BRACKET *BRACKET*	1	-
221	532403187	SPRING *SPRING*	1	-
222	879212010	WASHER *WASHER*	1	-
223	598662601	BOLT *BOLT*	1	-
225	532403319	BELT GUIDE *BELT GUIDE*	1	-
227	596135901	BOLT *BOLT*	1	-
325	586431203	BRACKET *BRACKET*	1	-
326	586001103	BRACKET *BRACKET*	1	-
334	585882202	BRACKET *BRACKET*	1	-
336	587259602	BOLT	1	-

Ref.	Article N.	Description	Qty	Kit
		BOLT		
1	532163465	BATTERY *BATTERY*	1	-
2	874760412	BOLT *BOLT*	1	-
8	587205101	TRAY *TRAY*	1	-
16	532176138	MICRO SWITCH *MICRO SWITCH*	1	-
21	585436402	HARNESS *HARNESS*	1	-
24	585555601	CABLE *CABLE*	1	-
25	585555501	CABLE *CABLE*	1	-
26	532175158	FUSE *FUSE*	1	-
27	596133601	LOCK NUT *LOCK NUT*	1	-
28	532416588	CABLE *CABLE*	1	-
29	532192749	SWITCH *SWITCH*	1	-
30	532193350	IGNITION MODULE *IGNITION MODULE*	1	-
33	532411935	KEY *KEY*	1	-
34	532110712	SWITCH *SWITCH*	1	-
40	501132901	HARNESS *HARNESS*	1	-
41	817720408	SCREW *SCREW*	1	-
42	532131563	COVER *COVER*	1	-
43	582042802	SOLENOID *SOLENOID*	1	-
46	594919101	HOUR METER *HOUR METER*	1	-
50	582107602	SWITCH *SWITCH*	1	-
55	817060512	SCREW *SCREW*	1	-

Ref.	Article N.	Description	Qty	Kit
71	532194276	CABLE ASSY *CABLE ASSY*	1	-
79	597523001	LIGHT *LIGHT*	1	-
90	532435395	TERMINAL COVER *TERMINAL COVER*	1	-
99	817670412	SCREW *SCREW*	1	-
100	596135301	WASHER *WASHER*	1	-
102	532404454	CABLE *CABLE*	1	-
105	532407568	SWITCH *SWITCH*	1	-
1	900000002	DUMMY PART *ENGINE*	1	-
2	589818702	MUFFLER *MUFFLER*	1	-
9	596501502	KEEPER *KEEPER*	1	-
11	587241601	CLUTCH *CLUTCH*	1	-
12	532405097	PULLEY *PULLEY*	1	-
15	599306004	FUEL TANK ASSY *FUEL TANK*	1	-
18	529989702	CAP *FUEL CAP*	1	-
20	587242504	THROTTLE *THROTTLE*	1	-
21	596321701	SCREW *SCREW*	1	-
28	532401135	LINE *FUEL LINE*	1	-
29	532137180	SPARK ARRESTER *SPARK ARRESTER KIT*	1	-
37	532123487	HOSE CLAMP *HOSE CLAMP*	1	-
41	532126197	WASHER *WASHER*	1	-
42	596238901	WASHER *WASHER*	1	-
45	596133601	LOCK NUT	1	-

Ref.	Article N.	Description	Qty	Kit
		LOCKNUT		
62	532434017	SHIELD *SHIELD*	1	-
69	532165391	GASKET *GASKET*	1	-
70	581881101	TUBE *TUBE.LH*	1	-
71	581881001	TUBE *TUBE. RH*	1	-
79	596134202	SCREW *SCREW*	1	-
81	532148456	TUBE *TUBE*	1	-
82	532428287	PLUG *PLUG*	1	-
84	817060620	SCREW *SCREW*	1	-
85	501606601	BOLT *BOLT*	1	-
90	817000616	SCREW *SCREW*	1	-
91	532187495	BUSHING *BUSHING*	1	-
102	817000512	SCREW *SCREW*	1	-
1	900000002	DUMMY PART *ENGINE MODEL NO. Kawa FR730V-AS40 (546841501)*	1	-
2	589818702	MUFFLER *MUFFLER*	1	-
9	596501502	KEEPER *KEEPER*	1	-
11	587241601	CLUTCH *CLUTCH*	1	-
12	532405097	PULLEY *PULLEY*	1	-
15	599306003	FUEL TANK ASSY *FUEL TANK*	1	-
18	585124801	FUEL CAP ASSY *FUEL CAP ASSY*	1	-
18	529989702	CAP *FUEL CAP ASSY*	1	-
20	532424341	THROTTLE CONTROL *THROTTLE*	1	-

Ref.	Article N.	Description	Qty	Kit
21	532438562	SCREW *SCREW*	1	-
22	532187768	CONTROL *CHOKE*	1	-
28	532401135	LINE *LINE.FUEL.64REAR.EMIS*	1	-
29	532137180	SPARK ARRESTER *SPARK ARRESTER*	1	-
37	532123487	HOSE CLAMP *HOSE CLAMP*	1	-
41	532126197	WASHER *WASHER*	1	-
42	596238901	WASHER *WASHER*	1	-
45	596133601	LOCK NUT *LOCK NUT*	1	-
62	532434017	SHIELD *SHIELD*	1	-
69	532178151	GASKET *GASKET MUFFLER*	1	-
70	583955601	TUBE *TUBE*	1	-
70	583955701	TUBE *TUBE*	1	-
81	532148456	TUBE *TUBE*	1	-
85	501606601	BOLT *BOLT*	1	-
86	532184362	NUT *NUT*	1	-
90	817000616	SCREW *SCREW*	1	-
91	532187495	BUSHING *BUSHING*	1	-
92	817120616	SCREW *SCREW*	1	-
102	817000512	SCREW *SCREW*	1	-
116	539132624	KNOB *KNOB-SHIFT*	1	-
1	532418229	DECK ASSY *DECK*	1	-
1	532418230	DECK	1	-

Ref.	Article N.	Description	Qty	Kit
		DECK		
6	532196066	COVER *COVER*	1	-
7	532197181	COVER *COVER*	1	-
11	532187256	RIDE ON BLADE *BLADE*	1	-
12	532404851	ROD *ROD*	1	-
14	587125401	MANDREL *MANDREL*	1	-
16	596133201	WASHER *WASHER*	1	-
19	532194208	PIN *PIN*	1	-
21	596040501	LOCK NUT *LOCK NUT*	1	-
24	532105304	HUB CAP *HUB CAP*	1	-
25	539107609	SPRING *SPIRNG*	1	-
26	532110452	NUT *NUT*	1	-
27	532187257	DEFLECTOR *DEFLECTOR*	1	-
29	595297001	ROD *ROD*	1	-
32	532173436	PULLEY *PULLEY*	1	-
33	596134801	HEXAGON NUT *HEXAGON NUT*	1	-
34	596322601	NUT *NUT*	1	-
35	584309301	SCREW *SCREW*	1	-
39	532197380	PULLEY *PULLEY*	1	-
41	584953901	BOLT *BOLT*	1	-
43	531169301	SERVICE KIT *SERVICE KIT*	1	-
46	532137729	SCREW *SCREW*	1	-

Ref.	Article N.	Description	Qty	Kit
47	587686701	DRIVE BELT *BELT*	1	-
49	532409149	NUT *NUT*	1	-
50	596136301	BOLT *BOLT*	1	-
52	532196106	PULLEY *PULLEY*	1	-
58	532187342	BAFFLE *BAFFLE*	1	-
59	531168701	SERVICE KIT *SERVICE KIT*	1	-
60	531168801	SERVICE KIT *SERVICE KIT*	1	-
61	585322605	REINFORCEMENT PLATE *REINFORCEMENT PLATE*	1	-
62	585322805	REINFORCEMENT PLATE *REINFORCEMENT PLATE*	1	-
63	596039401	BOLT *BOLT*	1	-
97	532178515	WASHER *WASHER*	1	-
98	532196105	SPRING *SPRING*	1	-
113	596435701	BOLT *BOLT*	1	-
114	532187556	ROD *ROD TENSION RELIEF*	1	-
116	596434404	BOLT *BOLT*	1	-
117	589527301	WHEEL *WHEEL*	1	-
120	596134901	WASHER *WASHER*	1	-
122	532187557	BUSHING *BUSHING*	1	-
184	596135701	LOCK NUT *LOCK NUT*	1	-
185	873900700	NUT *NUT*	1	-
187	593824001	STUD *STUD*	1	-
189	536050602	LINK	1	-

Ref.	Article N.	Description	Qty	Kit
190	532196539	BOLT *BOLT*	1	-
192	532198468	BELT GUIDE *BELT GUIDE*	1	-
194	874490736	BOLT *BOLT*	1	-
196	596337801	BOLT *BOLT*	1	-
241	532137729	SCREW	1	-
242	532415598	HOSE COUPLING *HOSE COUPLING*	1	-
243	532416405	COUPLING *COUPLING*	1	-
1	900000002	DUMMY PART	1	-
1	536178101	SEAT *SEAT*	1	-
2	597329902	BRACKET *BRACKET*	1	-
3	590777602	BRACKET *BRACKET*	1	-
6	521996502	NUT *NUT*	1	-
8	532171877	BOLT *BOLT*	1	-
9	597785101	BUMPER *BUMPER*	1	-
10	597298202	BRACKET *BRACKET*	1	-
19	597783101	KNOB *KNOB*	1	-
21	596240701	BOLT *BOLT*	1	-
29	536960901	RETAINER *RETAINER*	1	-
30	597781801	BOLT *BOLT*	1	-
37	594944401	NUT *NUT*	1	-
43	597869301	BOLT *BOLT*	1	-
48	536990401	ARM REST KIT *ARM REST KIT*	1	-
1	597866101	SERVICE KIT	1	-

Ref.	Article N.	Description	Qty	Kit
		SERVICE KIT		
2	532195968	SHAFT *SHAFT*	1	-
4	536652702	SPINDLE *SPINDLE*	1	-
5	538691201	SPINDLE *SPINDLE*	1	-
6	532006266	WASHER *WASHER*	1	-
7	532121748	WASHER *WASHER*	1	-
8	812000029	RETAINER RING *RETAINER RING*	1	-
9	532121232	HUB CAP *HUB CAP*	1	-
13	532121749	WASHER *WASHER*	1	-
14	596238701	WASHER *WASHER*	1	-
15	873540600	NUT *NUT*	1	-
16	587016002	SHAFT *SHAFT*	1	-
19	532194729	PLATE *PLATE*	1	-
21	586840201	ADAPTER *ADAPTER*	1	-
22	585029802	BEARING *BEARING*	1	-
26	594949101	CAP *CAP*	1	-
27	596933401	WASHER *WASHER*	1	-
28	817000612	SCREW *SCREW*	1	-
35	532194732	PLATE *PLATE*	1	-
45	587016401	WASHER *WASHER*	1	-
50	873900600	NUT *NUT*	1	-
53	532188967	WASHER *WASHER*	1	-

Ref.	Article N.	Description	Qty	Kit
57	532197246	BRACKET *BRACKET*	1	-
58	532194747	BOLT *BOLT*	1	-
59	532194748	WASHER *WASHER*	1	-
60	873971000	NUT *NUT*	1	-
61	597070202	LINKAGE *LINKAGE*	1	-
62	597070302	LINKAGE *LINKAGE*	1	-
63	817000512	SCREW *SCREW*	1	-
64	532199849	SPRING RETAINER *SPRING RETAINER*	1	-
66	871020748	BOLT *BOLT*	1	-
67	529496302	BUSHING *BUSHING*	1	-
68	873900700	NUT *NUT*	1	-
69	532199162	WASHER *WASHER*	1	-
70	585338801	BRACKET *BRACKET*	1	-
75	580683701	PINION *PINION*	1	-
76	580683601	SCREW *SCREW*	1	-
122	532444962	CAP *CAP*	1	-
1	532059192	CAP *CAP*	1	-
2	532065139	NIPPLE *NIPPLE*	1	-
3	532138336	WHEEL RIM *RIM*	1	-
4	532059904	HOSE *HOSE*	1	-
5	532106222	TIRE *TIRE*	1	-
6	532000278	NIPPLE	1	-

Ref.	Article N.	Description	Qty	Kit
		NIPPLE		
7	532009040	BEARING *BEARING*	1	-
8	532175039	HUB CAP *HUB CAP*	1	-
9	532122082	TIRE *TIRE*	1	-
10	532007152	TUBE *TUBE*	1	-
11	532138337	RIM SPROCKET *RIM SPROCKET*	1	-
12	576707201	SEALANT *SEALANT*	1	-
2	532422027	SHAFT *SHAFT*	1	-
3	594018002	LEVER	1	-
7	580962301	GRIP *GRIP*	1	-
10	532196314	SPRING *SPRING*	1	-
87	532194209	SPRING *SPRING*	1	-
88	532410710	SPRING *SPRING*	1	-
89	819191912	WASHER *WASHER*	1	-
90	532194208	PIN *PIN*	1	-
91	589464805	LINK ASSY *LINK ASSY*	1	-
97	817000612	SCREW *SCREW*	1	-
98	581506902	LINK ASSY *LINK ASSY*	1	-
116	594976501	WASHER *WASHER*	1	-

ENGINE

For 96043034800

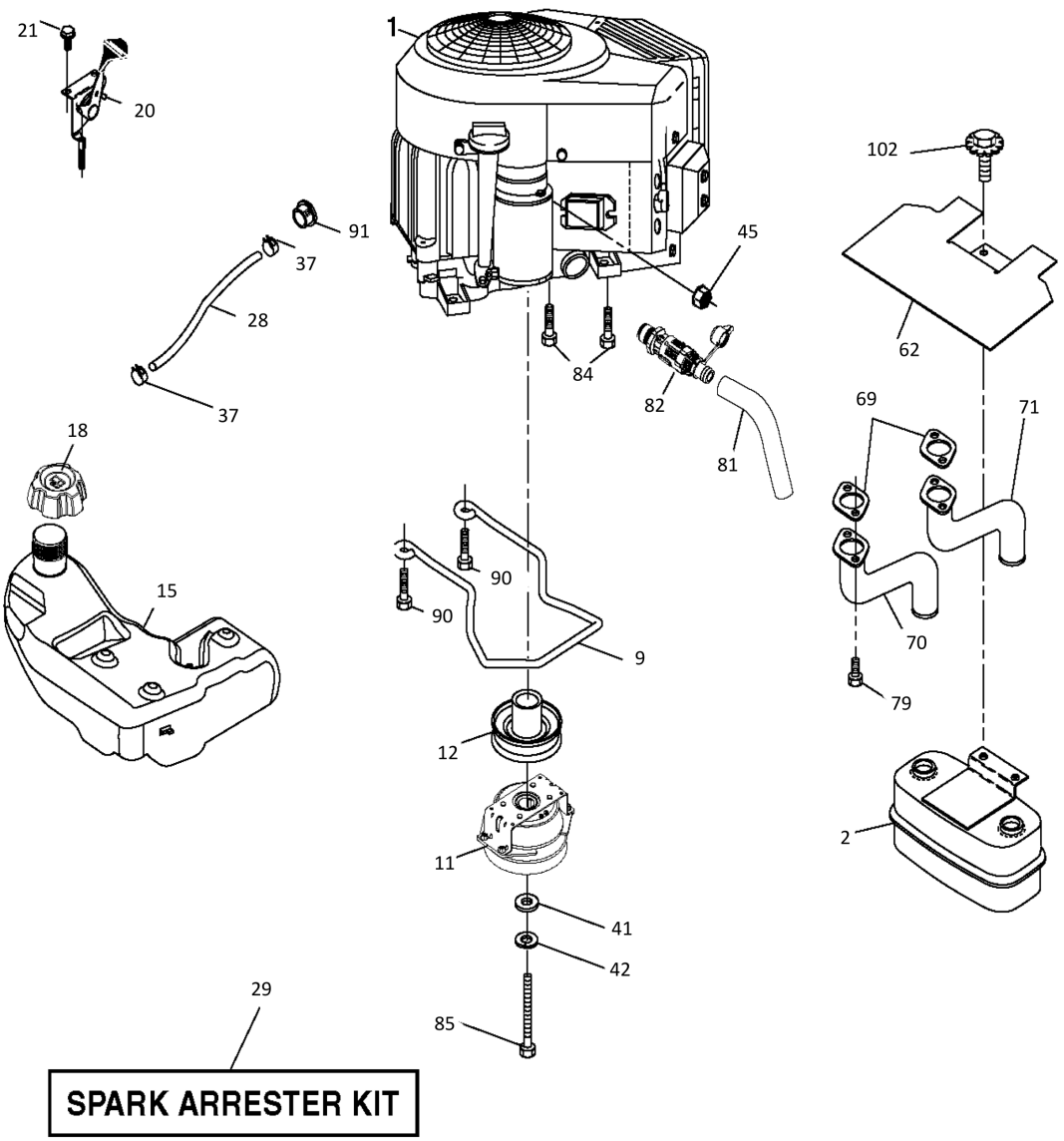

engine-tex_bs-2cyl_182

Ref.	Article N.	Description	Qty	Kit
3	597688201	COVER *COVER*	1	-
5	590748811	DASHBOARD *For 96043034100*	1	-
5	590748821	DASHBOARD *For 96043034800*	1	-

Ref.	Article N.	Description	Qty	Kit
14	532441177	HOOD *HOOD*	1	-
15	597867901	SERVICE KIT *SERVICE KIT*	1	-
18	597407102	GRILLE *GRILLE*	1	-
34	580910801	CHASSIS *CHASSIS*	1	-
36	817060512	SCREW *SCREW*	1	-
37	532441178	FENDER *FENDER*	1	-
52	596040501	LOCK NUT *LOCKNUT*	1	-
58	532412280	PLATE *DRAWBAR*	1	-
68	596030701	SCREW *SCREW*	1	-
125	581684801	CLIP *CLIP*	1	-
130	596321701	SCREW *SCREW*	1	-
137	532407590	BUMPER *BUMPER*	1	-
146	581857901	BOLT *BOLT*	1	-
150	532439774	AIR DUCT *AIR DUCT*	1	-
151	532436670	BRACKET *BRACKET*	1	-
152	599961102	SHIELD *SHIELD*	1	-
161	532439781	FUEL *FUEL*	1	-
162	596134101	SCREW *SCREW*	1	-
165	532196826	BRACKET *BRACKET*	1	-
175	590607702	CROSS MEMBER *CROSS MEMBER*	1	-
176	532400776	SCREW *SCREW*	1	-
177	532195228	BUSHING	1	-

Ref.	Article N.	Description	Qty	Kit
		BUSHING		
180	532415063	FRAME *CHASSIS*	1	-
182	532406859	DASH *DASH*	1	-
183	595305701	SCREW *SCREW*	1	-
189	817000512	SCREW *SCREW*	1	-
194	596135701	LOCK NUT *LOCK NUT*	1	-
195	532404137	PLUG *PLUG*	1	-
199	532413485	PLATE *For 96043034100*	1	-
199	596207202	PLATE *For 96043034800*	1	-
202	597867701	SERVICE KIT *SERVICE KIT*	1	-
204	597408001	VENT *VENT*	1	-
205	532439730	TRIM *TRIM*	1	-
206	532439729	TRIM *TRIM*	1	-
213	596030501	SCREW *SCREW*	1	-
214	532199145	CLIP *CLIP*	1	-
217	532409167	ROD *ROD*	1	-
218	532196395	PLATE *PLATE*	1	-
228	593824001	STUD *STUD*	1	-
233	532196539	BOLT *BOLT*	1	-
235	596564201	SPACER *SPACER*	1	-
236	873930500	NUT *NUT*	1	-
259	596434001	SCREW *SCREW*	1	-

Ref.	Article N.	Description	Qty	Kit
282	532414110	CLIP *CLIP*	1	-
283	532439823	CONSOLE *For 96043034100*	1	-
283	596304901	CONSOLE *For 96043034800*	1	-
284	532439861	CONSOLE *For 96043034100*	1	-
284	532439823	CONSOLE *For 96043034800*	1	-
285	532416315	CONSOLE *CONSOLE*	1	-
286	532416317	CONSOLE *CONSOLE*	1	-
287	817600406	SCREW *SCREW*	1	-
306	873900600	NUT *NUT*	1	-
335	532448204	COVER *COVER*	1	-
336	532445309	COVER *COVER*	1	-
350	532445143	CLIP *CLIP*	1	-
375	586908201	BUMPER *BUMPER*	1	-
378	590849801	BUSHING *BUSHING*	1	-
1	581579001	DECAL *DECAL*	1	-
2	531229002	DECAL *DECAL*	1	-
3	546812401	DECAL *DECAL*	1	-
4	581724501	DECAL *DECAL*	1	-
5	599966801	DECAL *DECAL*	1	-
6	546852001	DECAL *For 96043034100*	1	-
6	548111901	DECAL *For 96043034800*	1	-
7	584904602	DECAL	1	-

Ref.	Article N.	Description	Qty	Kit
		DECAL		
8	581724802	DECAL *DECAL*	1	-
9	532439681	PLATE *PAD*	1	-
10	532439682	PAD *PAD*	1	-
1	532426120	TRANSAXLE	1	-
2	532123583	KEY *KEY*	1	-
3	532407287	PULLEY *IDLER*	1	-
15	596565301	WASHER *WASHER*	1	-
17	532413678	BRAKE SPRING *BRAKE SPRING*	1	-
26	532199679	SPRING *SPRING*	1	-
29	532403806	ROD *ROD*	1	-
33	812000001	RETAINER RING *RETAINER RING*	1	-
35	590605902	ROD *ROD*	1	-
37	532188967	WASHER *WASHER*	1	-
42	532008883	PEDAL *PEDAL*	1	-
49	596136201	BOLT *BOLT*	1	-
50	532194327	PULLEY *PULLEY*	1	-
51	873900600	NUT *NUT*	1	-
52	532194326	PULLEY *PULLEY*	1	-
56	592855201	DRIVE BELT *BELT*	1	-
64	532197865	SHAFT *SHAFT*	1	-
69	532423303	HAIR PIN COTTER *HAIR PIN COTTER*	1	-
73	596136501	BOLT	1	-

Ref.	Article N.	Description	Qty	Kit
		BOLT		
92	595305701	SCREW *SCREW*	1	-
99	582404501	ROD *ROD*	1	-
116	596135701	LOCK NUT *LOCK NUT*	1	-
125	817000512	SCREW *SCREW*	1	-
143	596030701	SCREW *SCREW*	1	-
153	532004497	CLIP *CLIP*	1	-
159	596029501	PIN *PIN*	1	-
161	532105709	SPRING *SPRING*	1	-
163	593861001	ROD *ROD*	1	-
166	532429164	NUT *NUT*	1	-
167	532405257	LATCH *LATCH*	1	-
170	532413430	BELT GUIDE *KEEPER*	1	-
177	587225301	PIN *PIN*	1	-
183	532137057	SPACER *SPACER*	1	-
184	587653701	HANDLE *HANDLE*	1	-
185	872110622	BOLT *BOLT*	1	-
186	532194321	SPACER *SPACER*	1	-
187	596135501	WASHER *WASHER*	1	-
188	582217001	LINK *LINK*	1	-
189	532194317	PLATE *PLATE*	1	-
190	532194318	BELT GUIDE *BELT GUIDE*	1	-

Ref.	Article N.	Description	Qty	Kit
196	817000616	SCREW *SCREW*	1	-
197	585658602	BOSS *BOSS*	1	-
205	532121748	WASHER *WASHER*	1	-
206	532448596	BRACKET *BRACKET*	1	-
207	587031402	LATCH *LATCH*	1	-
208	596564101	GEAR *GEAR*	1	-
209	590527802	ROD *ROD*	1	-
210	532400980	PEDAL ARM *PEDAL ARM*	1	-
211	532120183	BEARING *BEARING*	1	-
213	532403119	CONTROL *CONTROL*	1	-
214	532421263	PAD *PAD*	1	-
215	586606502	PEDAL *PEDAL*	1	-
216	532196131	BRACKET *BRACKET*	1	-
221	532403187	SPRING *SPRING*	1	-
222	879212010	WASHER *WASHER*	1	-
223	598662601	BOLT *BOLT*	1	-
225	532403319	BELT GUIDE *BELT GUIDE*	1	-
227	596135901	BOLT *BOLT*	1	-
325	586431203	BRACKET *BRACKET*	1	-
326	586001103	BRACKET *BRACKET*	1	-
334	585882202	BRACKET *BRACKET*	1	-
336	587259602	BOLT	1	-

Ref.	Article N.	Description	Qty	Kit
		BOLT		
1	532163465	BATTERY *BATTERY*	1	-
2	874760412	BOLT *BOLT*	1	-
8	587205101	TRAY *TRAY*	1	-
16	532176138	MICRO SWITCH *MICRO SWITCH*	1	-
21	585436402	HARNESS *HARNESS*	1	-
24	585555601	CABLE *CABLE*	1	-
25	585555501	CABLE *CABLE*	1	-
26	532175158	FUSE *FUSE*	1	-
27	596133601	LOCK NUT *LOCK NUT*	1	-
28	532416588	CABLE *CABLE*	1	-
29	532192749	SWITCH *SWITCH*	1	-
30	532193350	IGNITION MODULE *IGNITION MODULE*	1	-
33	532411935	KEY *KEY*	1	-
34	532110712	SWITCH *SWITCH*	1	-
40	501132901	HARNESS *HARNESS*	1	-
41	817720408	SCREW *SCREW*	1	-
42	532131563	COVER *COVER*	1	-
43	582042802	SOLENOID *SOLENOID*	1	-
46	594919101	HOUR METER *HOUR METER*	1	-
50	582107602	SWITCH *SWITCH*	1	-
55	817060512	SCREW *SCREW*	1	-

Ref.	Article N.	Description	Qty	Kit
71	532194276	CABLE ASSY *CABLE ASSY*	1	-
79	597523001	LIGHT *LIGHT*	1	-
90	532435395	TERMINAL COVER *TERMINAL COVER*	1	-
99	817670412	SCREW *SCREW*	1	-
100	596135301	WASHER *WASHER*	1	-
102	532404454	CABLE *CABLE*	1	-
105	532407568	SWITCH *SWITCH*	1	-
1	900000002	DUMMY PART *ENGINE*	1	-
2	589818702	MUFFLER *MUFFLER*	1	-
9	596501502	KEEPER *KEEPER*	1	-
11	587241601	CLUTCH *CLUTCH*	1	-
12	532405097	PULLEY *PULLEY*	1	-
15	599306004	FUEL TANK ASSY *FUEL TANK*	1	-
18	529989702	CAP *FUEL CAP*	1	-
20	587242504	THROTTLE *THROTTLE*	1	-
21	596321701	SCREW *SCREW*	1	-
28	532401135	LINE *FUEL LINE*	1	-
29	532137180	SPARK ARRESTER *SPARK ARRESTER KIT*	1	-
37	532123487	HOSE CLAMP *HOSE CLAMP*	1	-
41	532126197	WASHER *WASHER*	1	-
42	596238901	WASHER *WASHER*	1	-
45	596133601	LOCK NUT	1	-

Ref.	Article N.	Description	Qty	Kit
		LOCKNUT		
62	532434017	SHIELD *SHIELD*	1	-
69	532165391	GASKET *GASKET*	1	-
70	581881101	TUBE *TUBE.LH*	1	-
71	581881001	TUBE *TUBE. RH*	1	-
79	596134202	SCREW *SCREW*	1	-
81	532148456	TUBE *TUBE*	1	-
82	532428287	PLUG *PLUG*	1	-
84	817060620	SCREW *SCREW*	1	-
85	501606601	BOLT *BOLT*	1	-
90	817000616	SCREW *SCREW*	1	-
91	532187495	BUSHING *BUSHING*	1	-
102	817000512	SCREW *SCREW*	1	-
1	900000002	DUMMY PART *ENGINE MODEL NO. Kawa FR730V-AS40 (546841501)*	1	-
2	589818702	MUFFLER *MUFFLER*	1	-
9	596501502	KEEPER *KEEPER*	1	-
11	587241601	CLUTCH *CLUTCH*	1	-
12	532405097	PULLEY *PULLEY*	1	-
15	599306003	FUEL TANK ASSY *FUEL TANK*	1	-
18	585124801	FUEL CAP ASSY *FUEL CAP ASSY*	1	-
18	529989702	CAP *FUEL CAP ASSY*	1	-
20	532424341	THROTTLE CONTROL *THROTTLE*	1	-

Ref.	Article N.	Description	Qty	Kit
21	532438562	SCREW *SCREW*	1	-
22	532187768	CONTROL *CHOKE*	1	-
28	532401135	LINE *LINE.FUEL.64REAR.EMIS*	1	-
29	532137180	SPARK ARRESTER *SPARK ARRESTER*	1	-
37	532123487	HOSE CLAMP *HOSE CLAMP*	1	-
41	532126197	WASHER *WASHER*	1	-
42	596238901	WASHER *WASHER*	1	-
45	596133601	LOCK NUT *LOCK NUT*	1	-
62	532434017	SHIELD *SHIELD*	1	-
69	532178151	GASKET *GASKET MUFFLER*	1	-
70	583955601	TUBE *TUBE*	1	-
70	583955701	TUBE *TUBE*	1	-
81	532148456	TUBE *TUBE*	1	-
85	501606601	BOLT *BOLT*	1	-
86	532184362	NUT *NUT*	1	-
90	817000616	SCREW *SCREW*	1	-
91	532187495	BUSHING *BUSHING*	1	-
92	817120616	SCREW *SCREW*	1	-
102	817000512	SCREW *SCREW*	1	-
116	539132624	KNOB *KNOB-SHIFT*	1	-
1	532418229	DECK ASSY *DECK*	1	-
1	532418230	DECK	1	-

Ref.	Article N.	Description	Qty	Kit
		DECK		
6	532196066	COVER *COVER*	1	-
7	532197181	COVER *COVER*	1	-
11	532187256	RIDE ON BLADE *BLADE*	1	-
12	532404851	ROD *ROD*	1	-
14	587125401	MANDREL *MANDREL*	1	-
16	596133201	WASHER *WASHER*	1	-
19	532194208	PIN *PIN*	1	-
21	596040501	LOCK NUT *LOCK NUT*	1	-
24	532105304	HUB CAP *HUB CAP*	1	-
25	539107609	SPRING *SPIRNG*	1	-
26	532110452	NUT *NUT*	1	-
27	532187257	DEFLECTOR *DEFLECTOR*	1	-
29	595297001	ROD *ROD*	1	-
32	532173436	PULLEY *PULLEY*	1	-
33	596134801	HEXAGON NUT *HEXAGON NUT*	1	-
34	596322601	NUT *NUT*	1	-
35	584309301	SCREW *SCREW*	1	-
39	532197380	PULLEY *PULLEY*	1	-
41	584953901	BOLT *BOLT*	1	-
43	531169301	SERVICE KIT *SERVICE KIT*	1	-
46	532137729	SCREW *SCREW*	1	-

Ref.	Article N.	Description	Qty	Kit
47	587686701	DRIVE BELT *BELT*	1	-
49	532409149	NUT *NUT*	1	-
50	596136301	BOLT *BOLT*	1	-
52	532196106	PULLEY *PULLEY*	1	-
58	532187342	BAFFLE *BAFFLE*	1	-
59	531168701	SERVICE KIT *SERVICE KIT*	1	-
60	531168801	SERVICE KIT *SERVICE KIT*	1	-
61	585322605	REINFORCEMENT PLATE *REINFORCEMENT PLATE*	1	-
62	585322805	REINFORCEMENT PLATE *REINFORCEMENT PLATE*	1	-
63	596039401	BOLT *BOLT*	1	-
97	532178515	WASHER *WASHER*	1	-
98	532196105	SPRING *SPRING*	1	-
113	596435701	BOLT *BOLT*	1	-
114	532187556	ROD *ROD TENSION RELIEF*	1	-
116	596434404	BOLT *BOLT*	1	-
117	589527301	WHEEL *WHEEL*	1	-
120	596134901	WASHER *WASHER*	1	-
122	532187557	BUSHING *BUSHING*	1	-
184	596135701	LOCK NUT *LOCK NUT*	1	-
185	873900700	NUT *NUT*	1	-
187	593824001	STUD *STUD*	1	-
189	536050602	LINK	1	-

Ref.	Article N.	Description	Qty	Kit
190	532196539	BOLT *BOLT*	1	-
192	532198468	BELT GUIDE *BELT GUIDE*	1	-
194	874490736	BOLT *BOLT*	1	-
196	596337801	BOLT *BOLT*	1	-
241	532137729	SCREW	1	-
242	532415598	HOSE COUPLING *HOSE COUPLING*	1	-
243	532416405	COUPLING *COUPLING*	1	-
1	900000002	DUMMY PART	1	-
1	536178101	SEAT *SEAT*	1	-
2	597329902	BRACKET *BRACKET*	1	-
3	590777602	BRACKET *BRACKET*	1	-
6	521996502	NUT *NUT*	1	-
8	532171877	BOLT *BOLT*	1	-
9	597785101	BUMPER *BUMPER*	1	-
10	597298202	BRACKET *BRACKET*	1	-
19	597783101	KNOB *KNOB*	1	-
21	596240701	BOLT *BOLT*	1	-
29	536960901	RETAINER *RETAINER*	1	-
30	597781801	BOLT *BOLT*	1	-
37	594944401	NUT *NUT*	1	-
43	597869301	BOLT *BOLT*	1	-
48	536990401	ARM REST KIT *ARM REST KIT*	1	-
1	597866101	SERVICE KIT	1	-

Ref.	Article N.	Description	Qty	Kit
		SERVICE KIT		
2	532195968	SHAFT *SHAFT*	1	-
4	536652702	SPINDLE *SPINDLE*	1	-
5	538691201	SPINDLE *SPINDLE*	1	-
6	532006266	WASHER *WASHER*	1	-
7	532121748	WASHER *WASHER*	1	-
8	812000029	RETAINER RING *RETAINER RING*	1	-
9	532121232	HUB CAP *HUB CAP*	1	-
13	532121749	WASHER *WASHER*	1	-
14	596238701	WASHER *WASHER*	1	-
15	873540600	NUT *NUT*	1	-
16	587016002	SHAFT *SHAFT*	1	-
19	532194729	PLATE *PLATE*	1	-
21	586840201	ADAPTER *ADAPTER*	1	-
22	585029802	BEARING *BEARING*	1	-
26	594949101	CAP *CAP*	1	-
27	596933401	WASHER *WASHER*	1	-
28	817000612	SCREW *SCREW*	1	-
35	532194732	PLATE *PLATE*	1	-
45	587016401	WASHER *WASHER*	1	-
50	873900600	NUT *NUT*	1	-
53	532188967	WASHER *WASHER*	1	-

Ref.	Article N.	Description	Qty	Kit
57	532197246	BRACKET *BRACKET*	1	-
58	532194747	BOLT *BOLT*	1	-
59	532194748	WASHER *WASHER*	1	-
60	873971000	NUT *NUT*	1	-
61	597070202	LINKAGE *LINKAGE*	1	-
62	597070302	LINKAGE *LINKAGE*	1	-
63	817000512	SCREW *SCREW*	1	-
64	532199849	SPRING RETAINER *SPRING RETAINER*	1	-
66	871020748	BOLT *BOLT*	1	-
67	529496302	BUSHING *BUSHING*	1	-
68	873900700	NUT *NUT*	1	-
69	532199162	WASHER *WASHER*	1	-
70	585338801	BRACKET *BRACKET*	1	-
75	580683701	PINION *PINION*	1	-
76	580683601	SCREW *SCREW*	1	-
122	532444962	CAP *CAP*	1	-
1	532059192	CAP *CAP*	1	-
2	532065139	NIPPLE *NIPPLE*	1	-
3	532138336	WHEEL RIM *RIM*	1	-
4	532059904	HOSE *HOSE*	1	-
5	532106222	TIRE *TIRE*	1	-
6	532000278	NIPPLE	1	-

Ref.	Article N.	Description	Qty	Kit
		NIPPLE		
7	532009040	BEARING *BEARING*	1	-
8	532175039	HUB CAP *HUB CAP*	1	-
9	532122082	TIRE *TIRE*	1	-
10	532007152	TUBE *TUBE*	1	-
11	532138337	RIM SPROCKET *RIM SPROCKET*	1	-
12	576707201	SEALANT *SEALANT*	1	-
2	532422027	SHAFT *SHAFT*	1	-
3	594018002	LEVER	1	-
7	580962301	GRIP *GRIP*	1	-
10	532196314	SPRING *SPRING*	1	-
87	532194209	SPRING *SPRING*	1	-
88	532410710	SPRING *SPRING*	1	-
89	819191912	WASHER *WASHER*	1	-
90	532194208	PIN *PIN*	1	-
91	589464805	LINK ASSY *LINK ASSY*	1	-
97	817000612	SCREW *SCREW*	1	-
98	581506902	LINK ASSY *LINK ASSY*	1	-
116	594976501	WASHER *WASHER*	1	-

ENGINE

For 96043034100

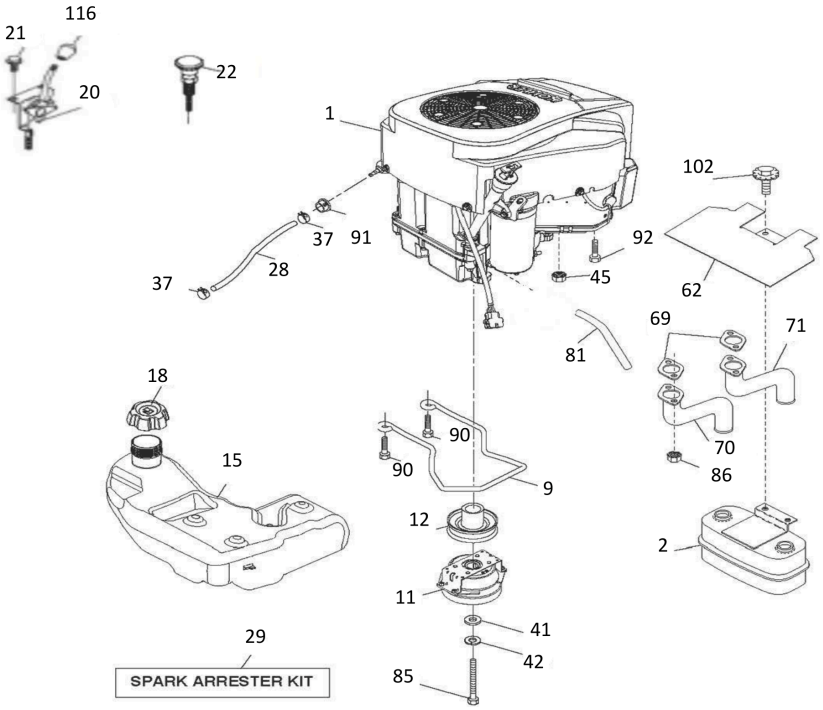

Ref.	Article N.	Description	Qty	Kit
3	597688201	COVER *COVER*	1	-
5	590748811	DASHBOARD *For 96043034100*	1	-
5	590748821	DASHBOARD *For 96043034800*	1	-

Ref.	Article N.	Description	Qty	Kit
14	532441177	HOOD *HOOD*	1	-
15	597867901	SERVICE KIT *SERVICE KIT*	1	-
18	597407102	GRILLE *GRILLE*	1	-
34	580910801	CHASSIS *CHASSIS*	1	-
36	817060512	SCREW *SCREW*	1	-
37	532441178	FENDER *FENDER*	1	-
52	596040501	LOCK NUT *LOCKNUT*	1	-
58	532412280	PLATE *DRAWBAR*	1	-
68	596030701	SCREW *SCREW*	1	-
125	581684801	CLIP *CLIP*	1	-
130	596321701	SCREW *SCREW*	1	-
137	532407590	BUMPER *BUMPER*	1	-
146	581857901	BOLT *BOLT*	1	-
150	532439774	AIR DUCT *AIR DUCT*	1	-
151	532436670	BRACKET *BRACKET*	1	-
152	599961102	SHIELD *SHIELD*	1	-
161	532439781	FUEL *FUEL*	1	-
162	596134101	SCREW *SCREW*	1	-
165	532196826	BRACKET *BRACKET*	1	-
175	590607702	CROSS MEMBER *CROSS MEMBER*	1	-
176	532400776	SCREW *SCREW*	1	-
177	532195228	BUSHING	1	-

Ref.	Article N.	Description	Qty	Kit
		BUSHING		
180	532415063	FRAME *CHASSIS*	1	-
182	532406859	DASH *DASH*	1	-
183	595305701	SCREW *SCREW*	1	-
189	817000512	SCREW *SCREW*	1	-
194	596135701	LOCK NUT *LOCK NUT*	1	-
195	532404137	PLUG *PLUG*	1	-
199	532413485	PLATE *For 96043034100*	1	-
199	596207202	PLATE *For 96043034800*	1	-
202	597867701	SERVICE KIT *SERVICE KIT*	1	-
204	597408001	VENT *VENT*	1	-
205	532439730	TRIM *TRIM*	1	-
206	532439729	TRIM *TRIM*	1	-
213	596030501	SCREW *SCREW*	1	-
214	532199145	CLIP *CLIP*	1	-
217	532409167	ROD *ROD*	1	-
218	532196395	PLATE *PLATE*	1	-
228	593824001	STUD *STUD*	1	-
233	532196539	BOLT *BOLT*	1	-
235	596564201	SPACER *SPACER*	1	-
236	873930500	NUT *NUT*	1	-
259	596434001	SCREW *SCREW*	1	-

Ref.	Article N.	Description	Qty	Kit
282	532414110	CLIP *CLIP*	1	-
283	532439823	CONSOLE *For 96043034100*	1	-
283	596304901	CONSOLE *For 96043034800*	1	-
284	532439861	CONSOLE *For 96043034100*	1	-
284	532439823	CONSOLE *For 96043034800*	1	-
285	532416315	CONSOLE *CONSOLE*	1	-
286	532416317	CONSOLE *CONSOLE*	1	-
287	817600406	SCREW *SCREW*	1	-
306	873900600	NUT *NUT*	1	-
335	532448204	COVER *COVER*	1	-
336	532445309	COVER *COVER*	1	-
350	532445143	CLIP *CLIP*	1	-
375	586908201	BUMPER *BUMPER*	1	-
378	590849801	BUSHING *BUSHING*	1	-
1	581579001	DECAL *DECAL*	1	-
2	531229002	DECAL *DECAL*	1	-
3	546812401	DECAL *DECAL*	1	-
4	581724501	DECAL *DECAL*	1	-
5	599966801	DECAL *DECAL*	1	-
6	546852001	DECAL *For 96043034100*	1	-
6	548111901	DECAL *For 96043034800*	1	-
7	584904602	DECAL	1	-

Ref.	Article N.	Description	Qty	Kit
		DECAL		
8	581724802	DECAL *DECAL*	1	-
9	532439681	PLATE *PAD*	1	-
10	532439682	PAD *PAD*	1	-
1	532426120	TRANSAXLE	1	-
2	532123583	KEY *KEY*	1	-
3	532407287	PULLEY *IDLER*	1	-
15	596565301	WASHER *WASHER*	1	-
17	532413678	BRAKE SPRING *BRAKE SPRING*	1	-
26	532199679	SPRING *SPRING*	1	-
29	532403806	ROD *ROD*	1	-
33	812000001	RETAINER RING *RETAINER RING*	1	-
35	590605902	ROD *ROD*	1	-
37	532188967	WASHER *WASHER*	1	-
42	532008883	PEDAL *PEDAL*	1	-
49	596136201	BOLT *BOLT*	1	-
50	532194327	PULLEY *PULLEY*	1	-
51	873900600	NUT *NUT*	1	-
52	532194326	PULLEY *PULLEY*	1	-
56	592855201	DRIVE BELT *BELT*	1	-
64	532197865	SHAFT *SHAFT*	1	-
69	532423303	HAIR PIN COTTER *HAIR PIN COTTER*	1	-
73	596136501	BOLT	1	-

Ref.	Article N.	Description	Qty	Kit
		BOLT		
92	595305701	SCREW *SCREW*	1	-
99	582404501	ROD *ROD*	1	-
116	596135701	LOCK NUT *LOCK NUT*	1	-
125	817000512	SCREW *SCREW*	1	-
143	596030701	SCREW *SCREW*	1	-
153	532004497	CLIP *CLIP*	1	-
159	596029501	PIN *PIN*	1	-
161	532105709	SPRING *SPRING*	1	-
163	593861001	ROD *ROD*	1	-
166	532429164	NUT *NUT*	1	-
167	532405257	LATCH *LATCH*	1	-
170	532413430	BELT GUIDE *KEEPER*	1	-
177	587225301	PIN *PIN*	1	-
183	532137057	SPACER *SPACER*	1	-
184	587653701	HANDLE *HANDLE*	1	-
185	872110622	BOLT *BOLT*	1	-
186	532194321	SPACER *SPACER*	1	-
187	596135501	WASHER *WASHER*	1	-
188	582217001	LINK *LINK*	1	-
189	532194317	PLATE *PLATE*	1	-
190	532194318	BELT GUIDE *BELT GUIDE*	1	-

Ref.	Article N.	Description	Qty	Kit
196	817000616	SCREW *SCREW*	1	-
197	585658602	BOSS *BOSS*	1	-
205	532121748	WASHER *WASHER*	1	-
206	532448596	BRACKET *BRACKET*	1	-
207	587031402	LATCH *LATCH*	1	-
208	596564101	GEAR *GEAR*	1	-
209	590527802	ROD *ROD*	1	-
210	532400980	PEDAL ARM *PEDAL ARM*	1	-
211	532120183	BEARING *BEARING*	1	-
213	532403119	CONTROL *CONTROL*	1	-
214	532421263	PAD *PAD*	1	-
215	586606502	PEDAL *PEDAL*	1	-
216	532196131	BRACKET *BRACKET*	1	-
221	532403187	SPRING *SPRING*	1	-
222	879212010	WASHER *WASHER*	1	-
223	598662601	BOLT *BOLT*	1	-
225	532403319	BELT GUIDE *BELT GUIDE*	1	-
227	596135901	BOLT *BOLT*	1	-
325	586431203	BRACKET *BRACKET*	1	-
326	586001103	BRACKET *BRACKET*	1	-
334	585882202	BRACKET *BRACKET*	1	-
336	587259602	BOLT	1	-

Ref.	Article N.	Description	Qty	Kit
		BOLT		
1	532163465	BATTERY *BATTERY*	1	-
2	874760412	BOLT *BOLT*	1	-
8	587205101	TRAY *TRAY*	1	-
16	532176138	MICRO SWITCH *MICRO SWITCH*	1	-
21	585436402	HARNESS *HARNESS*	1	-
24	585555601	CABLE *CABLE*	1	-
25	585555501	CABLE *CABLE*	1	-
26	532175158	FUSE *FUSE*	1	-
27	596133601	LOCK NUT *LOCK NUT*	1	-
28	532416588	CABLE *CABLE*	1	-
29	532192749	SWITCH *SWITCH*	1	-
30	532193350	IGNITION MODULE *IGNITION MODULE*	1	-
33	532411935	KEY *KEY*	1	-
34	532110712	SWITCH *SWITCH*	1	-
40	501132901	HARNESS *HARNESS*	1	-
41	817720408	SCREW *SCREW*	1	-
42	532131563	COVER *COVER*	1	-
43	582042802	SOLENOID *SOLENOID*	1	-
46	594919101	HOUR METER *HOUR METER*	1	-
50	582107602	SWITCH *SWITCH*	1	-
55	817060512	SCREW *SCREW*	1	-

Ref.	Article N.	Description	Qty	Kit
71	532194276	CABLE ASSY *CABLE ASSY*	1	-
79	597523001	LIGHT *LIGHT*	1	-
90	532435395	TERMINAL COVER *TERMINAL COVER*	1	-
99	817670412	SCREW *SCREW*	1	-
100	596135301	WASHER *WASHER*	1	-
102	532404454	CABLE *CABLE*	1	-
105	532407568	SWITCH *SWITCH*	1	-
1	900000002	DUMMY PART *ENGINE*	1	-
2	589818702	MUFFLER *MUFFLER*	1	-
9	596501502	KEEPER *KEEPER*	1	-
11	587241601	CLUTCH *CLUTCH*	1	-
12	532405097	PULLEY *PULLEY*	1	-
15	599306004	FUEL TANK ASSY *FUEL TANK*	1	-
18	529989702	CAP *FUEL CAP*	1	-
20	587242504	THROTTLE *THROTTLE*	1	-
21	596321701	SCREW *SCREW*	1	-
28	532401135	LINE *FUEL LINE*	1	-
29	532137180	SPARK ARRESTER *SPARK ARRESTER KIT*	1	-
37	532123487	HOSE CLAMP *HOSE CLAMP*	1	-
41	532126197	WASHER *WASHER*	1	-
42	596238901	WASHER *WASHER*	1	-
45	596133601	LOCK NUT	1	-

Ref.	Article N.	Description	Qty	Kit
		LOCKNUT		
62	532434017	SHIELD *SHIELD*	1	-
69	532165391	GASKET *GASKET*	1	-
70	581881101	TUBE *TUBE.LH*	1	-
71	581881001	TUBE *TUBE. RH*	1	-
79	596134202	SCREW *SCREW*	1	-
81	532148456	TUBE *TUBE*	1	-
82	532428287	PLUG *PLUG*	1	-
84	817060620	SCREW *SCREW*	1	-
85	501606601	BOLT *BOLT*	1	-
90	817000616	SCREW *SCREW*	1	-
91	532187495	BUSHING *BUSHING*	1	-
102	817000512	SCREW *SCREW*	1	-
1	900000002	DUMMY PART *ENGINE MODEL NO. Kawa FR730V-AS40 (546841501)*	1	-
2	589818702	MUFFLER *MUFFLER*	1	-
9	596501502	KEEPER *KEEPER*	1	-
11	587241601	CLUTCH *CLUTCH*	1	-
12	532405097	PULLEY *PULLEY*	1	-
15	599306003	FUEL TANK ASSY *FUEL TANK*	1	-
18	585124801	FUEL CAP ASSY *FUEL CAP ASSY*	1	-
18	529989702	CAP *FUEL CAP ASSY*	1	-
20	532424341	THROTTLE CONTROL *THROTTLE*	1	-

Ref.	Article N.	Description	Qty	Kit
21	532438562	SCREW *SCREW*	1	-
22	532187768	CONTROL *CHOKE*	1	-
28	532401135	LINE *LINE.FUEL.64REAR.EMIS*	1	-
29	532137180	SPARK ARRESTER *SPARK ARRESTER*	1	-
37	532123487	HOSE CLAMP *HOSE CLAMP*	1	-
41	532126197	WASHER *WASHER*	1	-
42	596238901	WASHER *WASHER*	1	-
45	596133601	LOCK NUT *LOCK NUT*	1	-
62	532434017	SHIELD *SHIELD*	1	-
69	532178151	GASKET *GASKET MUFFLER*	1	-
70	583955601	TUBE *TUBE*	1	-
70	583955701	TUBE *TUBE*	1	-
81	532148456	TUBE *TUBE*	1	-
85	501606601	BOLT *BOLT*	1	-
86	532184362	NUT *NUT*	1	-
90	817000616	SCREW *SCREW*	1	-
91	532187495	BUSHING *BUSHING*	1	-
92	817120616	SCREW *SCREW*	1	-
102	817000512	SCREW *SCREW*	1	-
116	539132624	KNOB *KNOB-SHIFT*	1	-
1	532418229	DECK ASSY *DECK*	1	-
1	532418230	DECK	1	-

Ref.	Article N.	Description	Qty	Kit
		DECK		
6	532196066	COVER *COVER*	1	-
7	532197181	COVER *COVER*	1	-
11	532187256	RIDE ON BLADE *BLADE*	1	-
12	532404851	ROD *ROD*	1	-
14	587125401	MANDREL *MANDREL*	1	-
16	596133201	WASHER *WASHER*	1	-
19	532194208	PIN *PIN*	1	-
21	596040501	LOCK NUT *LOCK NUT*	1	-
24	532105304	HUB CAP *HUB CAP*	1	-
25	539107609	SPRING *SPIRNG*	1	-
26	532110452	NUT *NUT*	1	-
27	532187257	DEFLECTOR *DEFLECTOR*	1	-
29	595297001	ROD *ROD*	1	-
32	532173436	PULLEY *PULLEY*	1	-
33	596134801	HEXAGON NUT *HEXAGON NUT*	1	-
34	596322601	NUT *NUT*	1	-
35	584309301	SCREW *SCREW*	1	-
39	532197380	PULLEY *PULLEY*	1	-
41	584953901	BOLT *BOLT*	1	-
43	531169301	SERVICE KIT *SERVICE KIT*	1	-
46	532137729	SCREW *SCREW*	1	-

Ref.	Article N.	Description	Qty	Kit
47	587686701	DRIVE BELT *BELT*	1	-
49	532409149	NUT *NUT*	1	-
50	596136301	BOLT *BOLT*	1	-
52	532196106	PULLEY *PULLEY*	1	-
58	532187342	BAFFLE *BAFFLE*	1	-
59	531168701	SERVICE KIT *SERVICE KIT*	1	-
60	531168801	SERVICE KIT *SERVICE KIT*	1	-
61	585322605	REINFORCEMENT PLATE *REINFORCEMENT PLATE*	1	-
62	585322805	REINFORCEMENT PLATE *REINFORCEMENT PLATE*	1	-
63	596039401	BOLT *BOLT*	1	-
97	532178515	WASHER *WASHER*	1	-
98	532196105	SPRING *SPRING*	1	-
113	596435701	BOLT *BOLT*	1	-
114	532187556	ROD *ROD TENSION RELIEF*	1	-
116	596434404	BOLT *BOLT*	1	-
117	589527301	WHEEL *WHEEL*	1	-
120	596134901	WASHER *WASHER*	1	-
122	532187557	BUSHING *BUSHING*	1	-
184	596135701	LOCK NUT *LOCK NUT*	1	-
185	873900700	NUT *NUT*	1	-
187	593824001	STUD *STUD*	1	-
189	536050602	LINK	1	-

Ref.	Article N.	Description	Qty	Kit
190	532196539	BOLT *BOLT*	1	-
192	532198468	BELT GUIDE *BELT GUIDE*	1	-
194	874490736	BOLT *BOLT*	1	-
196	596337801	BOLT *BOLT*	1	-
241	532137729	SCREW	1	-
242	532415598	HOSE COUPLING *HOSE COUPLING*	1	-
243	532416405	COUPLING *COUPLING*	1	-
1	900000002	DUMMY PART	1	-
1	536178101	SEAT *SEAT*	1	-
2	597329902	BRACKET *BRACKET*	1	-
3	590777602	BRACKET *BRACKET*	1	-
6	521996502	NUT *NUT*	1	-
8	532171877	BOLT *BOLT*	1	-
9	597785101	BUMPER *BUMPER*	1	-
10	597298202	BRACKET *BRACKET*	1	-
19	597783101	KNOB *KNOB*	1	-
21	596240701	BOLT *BOLT*	1	-
29	536960901	RETAINER *RETAINER*	1	-
30	597781801	BOLT *BOLT*	1	-
37	594944401	NUT *NUT*	1	-
43	597869301	BOLT *BOLT*	1	-
48	536990401	ARM REST KIT *ARM REST KIT*	1	-
1	597866101	SERVICE KIT	1	-

Ref.	Article N.	Description	Qty	Kit
		SERVICE KIT		
2	532195968	SHAFT *SHAFT*	1	-
4	536652702	SPINDLE *SPINDLE*	1	-
5	538691201	SPINDLE *SPINDLE*	1	-
6	532006266	WASHER *WASHER*	1	-
7	532121748	WASHER *WASHER*	1	-
8	812000029	RETAINER RING *RETAINER RING*	1	-
9	532121232	HUB CAP *HUB CAP*	1	-
13	532121749	WASHER *WASHER*	1	-
14	596238701	WASHER *WASHER*	1	-
15	873540600	NUT *NUT*	1	-
16	587016002	SHAFT *SHAFT*	1	-
19	532194729	PLATE *PLATE*	1	-
21	586840201	ADAPTER *ADAPTER*	1	-
22	585029802	BEARING *BEARING*	1	-
26	594949101	CAP *CAP*	1	-
27	596933401	WASHER *WASHER*	1	-
28	817000612	SCREW *SCREW*	1	-
35	532194732	PLATE *PLATE*	1	-
45	587016401	WASHER *WASHER*	1	-
50	873900600	NUT *NUT*	1	-
53	532188967	WASHER *WASHER*	1	-

Ref.	Article N.	Description	Qty	Kit
57	532197246	BRACKET *BRACKET*	1	-
58	532194747	BOLT *BOLT*	1	-
59	532194748	WASHER *WASHER*	1	-
60	873971000	NUT *NUT*	1	-
61	597070202	LINKAGE *LINKAGE*	1	-
62	597070302	LINKAGE *LINKAGE*	1	-
63	817000512	SCREW *SCREW*	1	-
64	532199849	SPRING RETAINER *SPRING RETAINER*	1	-
66	871020748	BOLT *BOLT*	1	-
67	529496302	BUSHING *BUSHING*	1	-
68	873900700	NUT *NUT*	1	-
69	532199162	WASHER *WASHER*	1	-
70	585338801	BRACKET *BRACKET*	1	-
75	580683701	PINION *PINION*	1	-
76	580683601	SCREW *SCREW*	1	-
122	532444962	CAP *CAP*	1	-
1	532059192	CAP *CAP*	1	-
2	532065139	NIPPLE *NIPPLE*	1	-
3	532138336	WHEEL RIM *RIM*	1	-
4	532059904	HOSE *HOSE*	1	-
5	532106222	TIRE *TIRE*	1	-
6	532000278	NIPPLE	1	-

Ref.	Article N.	Description	Qty	Kit
		NIPPLE		
7	532009040	BEARING *BEARING*	1	-
8	532175039	HUB CAP *HUB CAP*	1	-
9	532122082	TIRE *TIRE*	1	-
10	532007152	TUBE *TUBE*	1	-
11	532138337	RIM SPROCKET *RIM SPROCKET*	1	-
12	576707201	SEALANT *SEALANT*	1	-
2	532422027	SHAFT *SHAFT*	1	-
3	594018002	LEVER	1	-
7	580962301	GRIP *GRIP*	1	-
10	532196314	SPRING *SPRING*	1	-
87	532194209	SPRING *SPRING*	1	-
88	532410710	SPRING *SPRING*	1	-
89	819191912	WASHER *WASHER*	1	-
90	532194208	PIN *PIN*	1	-
91	589464805	LINK ASSY *LINK ASSY*	1	-
97	817000612	SCREW *SCREW*	1	-
98	581506902	LINK ASSY *LINK ASSY*	1	-
116	594976501	WASHER *WASHER*	1	-

MOWER DECK \/ CUTTING DECK

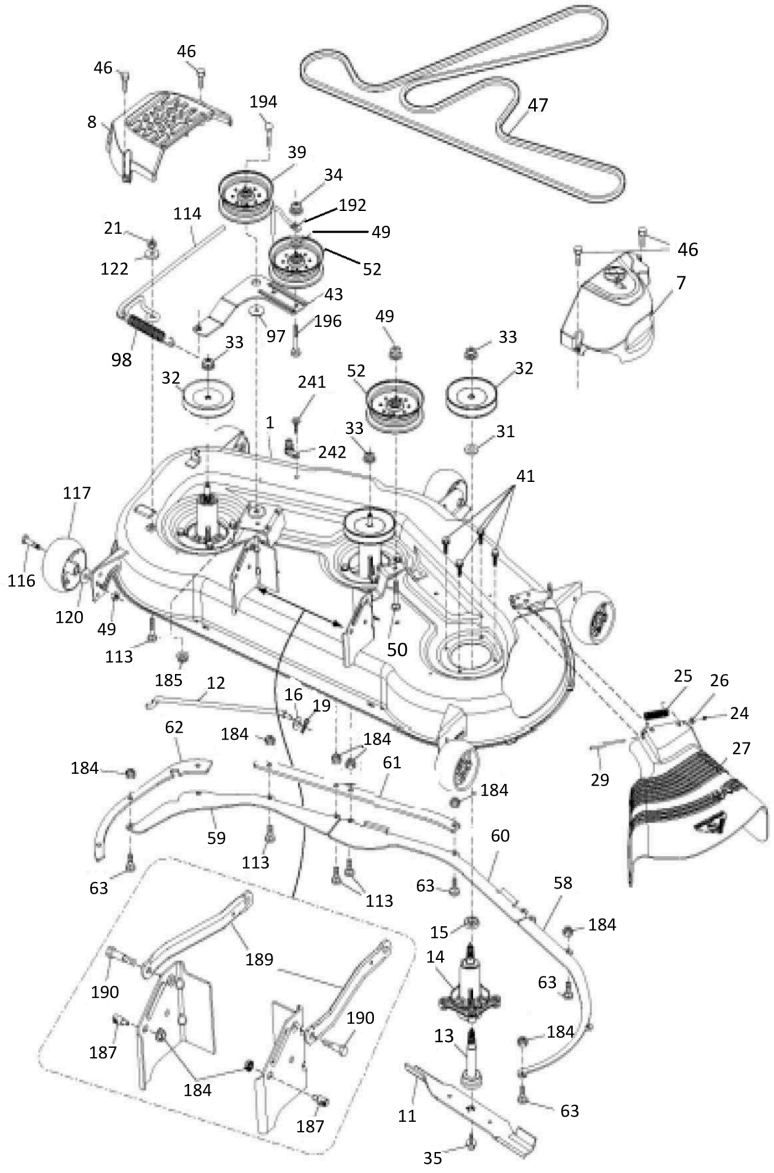

Ref.	Article N.	Description	Qty	Kit
3	597688201	COVER *COVER*	1	-
5	590748811	DASHBOARD *For 96043034100*	1	-
5	590748821	DASHBOARD *For 96043034800*	1	-

Ref.	Article N.	Description	Qty	Kit
14	532441177	HOOD *HOOD*	1	-
15	597867901	SERVICE KIT *SERVICE KIT*	1	-
18	597407102	GRILLE *GRILLE*	1	-
34	580910801	CHASSIS *CHASSIS*	1	-
36	817060512	SCREW *SCREW*	1	-
37	532441178	FENDER *FENDER*	1	-
52	596040501	LOCK NUT *LOCKNUT*	1	-
58	532412280	PLATE *DRAWBAR*	1	-
68	596030701	SCREW *SCREW*	1	-
125	581684801	CLIP *CLIP*	1	-
130	596321701	SCREW *SCREW*	1	-
137	532407590	BUMPER *BUMPER*	1	-
146	581857901	BOLT *BOLT*	1	-
150	532439774	AIR DUCT *AIR DUCT*	1	-
151	532436670	BRACKET *BRACKET*	1	-
152	599961102	SHIELD *SHIELD*	1	-
161	532439781	FUEL *FUEL*	1	-
162	596134101	SCREW *SCREW*	1	-
165	532196826	BRACKET *BRACKET*	1	-
175	590607702	CROSS MEMBER *CROSS MEMBER*	1	-
176	532400776	SCREW *SCREW*	1	-
177	532195228	BUSHING	1	-

Ref.	Article N.	Description	Qty	Kit
		BUSHING		
180	532415063	FRAME *CHASSIS*	1	-
182	532406859	DASH *DASH*	1	-
183	595305701	SCREW *SCREW*	1	-
189	817000512	SCREW *SCREW*	1	-
194	596135701	LOCK NUT *LOCK NUT*	1	-
195	532404137	PLUG *PLUG*	1	-
199	532413485	PLATE *For 96043034100*	1	-
199	596207202	PLATE *For 96043034800*	1	-
202	597867701	SERVICE KIT *SERVICE KIT*	1	-
204	597408001	VENT *VENT*	1	-
205	532439730	TRIM *TRIM*	1	-
206	532439729	TRIM *TRIM*	1	-
213	596030501	SCREW *SCREW*	1	-
214	532199145	CLIP *CLIP*	1	-
217	532409167	ROD *ROD*	1	-
218	532196395	PLATE *PLATE*	1	-
228	593824001	STUD *STUD*	1	-
233	532196539	BOLT *BOLT*	1	-
235	596564201	SPACER *SPACER*	1	-
236	873930500	NUT *NUT*	1	-
259	596434001	SCREW *SCREW*	1	-

Ref.	Article N.	Description	Qty	Kit
282	532414110	CLIP *CLIP*	1	-
283	532439823	CONSOLE *For 96043034100*	1	-
283	596304901	CONSOLE *For 96043034800*	1	-
284	532439861	CONSOLE *For 96043034100*	1	-
284	532439823	CONSOLE *For 96043034800*	1	-
285	532416315	CONSOLE *CONSOLE*	1	-
286	532416317	CONSOLE *CONSOLE*	1	-
287	817600406	SCREW *SCREW*	1	-
306	873900600	NUT *NUT*	1	-
335	532448204	COVER *COVER*	1	-
336	532445309	COVER *COVER*	1	-
350	532445143	CLIP *CLIP*	1	-
375	586908201	BUMPER *BUMPER*	1	-
378	590849801	BUSHING *BUSHING*	1	-
1	581579001	DECAL *DECAL*	1	-
2	531229002	DECAL *DECAL*	1	-
3	546812401	DECAL *DECAL*	1	-
4	581724501	DECAL *DECAL*	1	-
5	599966801	DECAL *DECAL*	1	-
6	546852001	DECAL *For 96043034100*	1	-
6	548111901	DECAL *For 96043034800*	1	-
7	584904602	DECAL	1	-

Ref.	Article N.	Description	Qty	Kit
		DECAL		
8	581724802	DECAL *DECAL*	1	-
9	532439681	PLATE *PAD*	1	-
10	532439682	PAD *PAD*	1	-
1	532426120	TRANSAXLE	1	-
2	532123583	KEY *KEY*	1	-
3	532407287	PULLEY *IDLER*	1	-
15	596565301	WASHER *WASHER*	1	-
17	532413678	BRAKE SPRING *BRAKE SPRING*	1	-
26	532199679	SPRING *SPRING*	1	-
29	532403806	ROD *ROD*	1	-
33	812000001	RETAINER RING *RETAINER RING*	1	-
35	590605902	ROD *ROD*	1	-
37	532188967	WASHER *WASHER*	1	-
42	532008883	PEDAL *PEDAL*	1	-
49	596136201	BOLT *BOLT*	1	-
50	532194327	PULLEY *PULLEY*	1	-
51	873900600	NUT *NUT*	1	-
52	532194326	PULLEY *PULLEY*	1	-
56	592855201	DRIVE BELT *BELT*	1	-
64	532197865	SHAFT *SHAFT*	1	-
69	532423303	HAIR PIN COTTER *HAIR PIN COTTER*	1	-
73	596136501	BOLT	1	-

Ref.	Article N.	Description	Qty	Kit
		BOLT		
92	595305701	SCREW *SCREW*	1	-
99	582404501	ROD *ROD*	1	-
116	596135701	LOCK NUT *LOCK NUT*	1	-
125	817000512	SCREW *SCREW*	1	-
143	596030701	SCREW *SCREW*	1	-
153	532004497	CLIP *CLIP*	1	-
159	596029501	PIN *PIN*	1	-
161	532105709	SPRING *SPRING*	1	-
163	593861001	ROD *ROD*	1	-
166	532429164	NUT *NUT*	1	-
167	532405257	LATCH *LATCH*	1	-
170	532413430	BELT GUIDE *KEEPER*	1	-
177	587225301	PIN *PIN*	1	-
183	532137057	SPACER *SPACER*	1	-
184	587653701	HANDLE *HANDLE*	1	-
185	872110622	BOLT *BOLT*	1	-
186	532194321	SPACER *SPACER*	1	-
187	596135501	WASHER *WASHER*	1	-
188	582217001	LINK *LINK*	1	-
189	532194317	PLATE *PLATE*	1	-
190	532194318	BELT GUIDE *BELT GUIDE*	1	-

Ref.	Article N.	Description	Qty	Kit
196	817000616	SCREW *SCREW*	1	-
197	585658602	BOSS *BOSS*	1	-
205	532121748	WASHER *WASHER*	1	-
206	532448596	BRACKET *BRACKET*	1	-
207	587031402	LATCH *LATCH*	1	-
208	596564101	GEAR *GEAR*	1	-
209	590527802	ROD *ROD*	1	-
210	532400980	PEDAL ARM *PEDAL ARM*	1	-
211	532120183	BEARING *BEARING*	1	-
213	532403119	CONTROL *CONTROL*	1	-
214	532421263	PAD *PAD*	1	-
215	586606502	PEDAL *PEDAL*	1	-
216	532196131	BRACKET *BRACKET*	1	-
221	532403187	SPRING *SPRING*	1	-
222	879212010	WASHER *WASHER*	1	-
223	598662601	BOLT *BOLT*	1	-
225	532403319	BELT GUIDE *BELT GUIDE*	1	-
227	596135901	BOLT *BOLT*	1	-
325	586431203	BRACKET *BRACKET*	1	-
326	586001103	BRACKET *BRACKET*	1	-
334	585882202	BRACKET *BRACKET*	1	-
336	587259602	BOLT	1	-

Ref.	Article N.	Description	Qty	Kit
		BOLT		
1	532163465	BATTERY *BATTERY*	1	-
2	874760412	BOLT *BOLT*	1	-
8	587205101	TRAY *TRAY*	1	-
16	532176138	MICRO SWITCH *MICRO SWITCH*	1	-
21	585436402	HARNESS *HARNESS*	1	-
24	585555601	CABLE *CABLE*	1	-
25	585555501	CABLE *CABLE*	1	-
26	532175158	FUSE *FUSE*	1	-
27	596133601	LOCK NUT *LOCK NUT*	1	-
28	532416588	CABLE *CABLE*	1	-
29	532192749	SWITCH *SWITCH*	1	-
30	532193350	IGNITION MODULE *IGNITION MODULE*	1	-
33	532411935	KEY *KEY*	1	-
34	532110712	SWITCH *SWITCH*	1	-
40	501132901	HARNESS *HARNESS*	1	-
41	817720408	SCREW *SCREW*	1	-
42	532131563	COVER *COVER*	1	-
43	582042802	SOLENOID *SOLENOID*	1	-
46	594919101	HOUR METER *HOUR METER*	1	-
50	582107602	SWITCH *SWITCH*	1	-
55	817060512	SCREW *SCREW*	1	-

Ref.	Article N.	Description	Qty	Kit
71	532194276	CABLE ASSY *CABLE ASSY*	1	-
79	597523001	LIGHT *LIGHT*	1	-
90	532435395	TERMINAL COVER *TERMINAL COVER*	1	-
99	817670412	SCREW *SCREW*	1	-
100	596135301	WASHER *WASHER*	1	-
102	532404454	CABLE *CABLE*	1	-
105	532407568	SWITCH *SWITCH*	1	-
1	900000002	DUMMY PART *ENGINE*	1	-
2	589818702	MUFFLER *MUFFLER*	1	-
9	596501502	KEEPER *KEEPER*	1	-
11	587241601	CLUTCH *CLUTCH*	1	-
12	532405097	PULLEY *PULLEY*	1	-
15	599306004	FUEL TANK ASSY *FUEL TANK*	1	-
18	529989702	CAP *FUEL CAP*	1	-
20	587242504	THROTTLE *THROTTLE*	1	-
21	596321701	SCREW *SCREW*	1	-
28	532401135	LINE *FUEL LINE*	1	-
29	532137180	SPARK ARRESTER *SPARK ARRESTER KIT*	1	-
37	532123487	HOSE CLAMP *HOSE CLAMP*	1	-
41	532126197	WASHER *WASHER*	1	-
42	596238901	WASHER *WASHER*	1	-
45	596133601	LOCK NUT	1	-

Ref.	Article N.	Description	Qty	Kit
		LOCKNUT		
62	532434017	SHIELD *SHIELD*	1	-
69	532165391	GASKET *GASKET*	1	-
70	581881101	TUBE *TUBE.LH*	1	-
71	581881001	TUBE *TUBE. RH*	1	-
79	596134202	SCREW *SCREW*	1	-
81	532148456	TUBE *TUBE*	1	-
82	532428287	PLUG *PLUG*	1	-
84	817060620	SCREW *SCREW*	1	-
85	501606601	BOLT *BOLT*	1	-
90	817000616	SCREW *SCREW*	1	-
91	532187495	BUSHING *BUSHING*	1	-
102	817000512	SCREW *SCREW*	1	-
1	900000002	DUMMY PART *ENGINE MODEL NO. Kawa FR730V-AS40 (546841501)*	1	-
2	589818702	MUFFLER *MUFFLER*	1	-
9	596501502	KEEPER *KEEPER*	1	-
11	587241601	CLUTCH *CLUTCH*	1	-
12	532405097	PULLEY *PULLEY*	1	-
15	599306003	FUEL TANK ASSY *FUEL TANK*	1	-
18	585124801	FUEL CAP ASSY *FUEL CAP ASSY*	1	-
18	529989702	CAP *FUEL CAP ASSY*	1	-
20	532424341	THROTTLE CONTROL *THROTTLE*	1	-

Ref.	Article N.	Description	Qty	Kit
21	532438562	SCREW *SCREW*	1	-
22	532187768	CONTROL *CHOKE*	1	-
28	532401135	LINE *LINE.FUEL.64REAR.EMIS*	1	-
29	532137180	SPARK ARRESTER *SPARK ARRESTER*	1	-
37	532123487	HOSE CLAMP *HOSE CLAMP*	1	-
41	532126197	WASHER *WASHER*	1	-
42	596238901	WASHER *WASHER*	1	-
45	596133601	LOCK NUT *LOCK NUT*	1	-
62	532434017	SHIELD *SHIELD*	1	-
69	532178151	GASKET *GASKET MUFFLER*	1	-
70	583955601	TUBE *TUBE*	1	-
70	583955701	TUBE *TUBE*	1	-
81	532148456	TUBE *TUBE*	1	-
85	501606601	BOLT *BOLT*	1	-
86	532184362	NUT *NUT*	1	-
90	817000616	SCREW *SCREW*	1	-
91	532187495	BUSHING *BUSHING*	1	-
92	817120616	SCREW *SCREW*	1	-
102	817000512	SCREW *SCREW*	1	-
116	539132624	KNOB *KNOB-SHIFT*	1	-
1	532418229	DECK ASSY *DECK*	1	-
1	532418230	DECK	1	-

Ref.	Article N.	Description	Qty	Kit
		DECK		
6	532196066	COVER *COVER*	1	-
7	532197181	COVER *COVER*	1	-
11	532187256	RIDE ON BLADE *BLADE*	1	-
12	532404851	ROD *ROD*	1	-
14	587125401	MANDREL *MANDREL*	1	-
16	596133201	WASHER *WASHER*	1	-
19	532194208	PIN *PIN*	1	-
21	596040501	LOCK NUT *LOCK NUT*	1	-
24	532105304	HUB CAP *HUB CAP*	1	-
25	539107609	SPRING *SPIRNG*	1	-
26	532110452	NUT *NUT*	1	-
27	532187257	DEFLECTOR *DEFLECTOR*	1	-
29	595297001	ROD *ROD*	1	-
32	532173436	PULLEY *PULLEY*	1	-
33	596134801	HEXAGON NUT *HEXAGON NUT*	1	-
34	596322601	NUT *NUT*	1	-
35	584309301	SCREW *SCREW*	1	-
39	532197380	PULLEY *PULLEY*	1	-
41	584953901	BOLT *BOLT*	1	-
43	531169301	SERVICE KIT *SERVICE KIT*	1	-
46	532137729	SCREW *SCREW*	1	-

Ref.	Article N.	Description	Qty	Kit
47	587686701	DRIVE BELT *BELT*	1	-
49	532409149	NUT *NUT*	1	-
50	596136301	BOLT *BOLT*	1	-
52	532196106	PULLEY *PULLEY*	1	-
58	532187342	BAFFLE *BAFFLE*	1	-
59	531168701	SERVICE KIT *SERVICE KIT*	1	-
60	531168801	SERVICE KIT *SERVICE KIT*	1	-
61	585322605	REINFORCEMENT PLATE *REINFORCEMENT PLATE*	1	-
62	585322805	REINFORCEMENT PLATE *REINFORCEMENT PLATE*	1	-
63	596039401	BOLT *BOLT*	1	-
97	532178515	WASHER *WASHER*	1	-
98	532196105	SPRING *SPRING*	1	-
113	596435701	BOLT *BOLT*	1	-
114	532187556	ROD *ROD TENSION RELIEF*	1	-
116	596434404	BOLT *BOLT*	1	-
117	589527301	WHEEL *WHEEL*	1	-
120	596134901	WASHER *WASHER*	1	-
122	532187557	BUSHING *BUSHING*	1	-
184	596135701	LOCK NUT *LOCK NUT*	1	-
185	873900700	NUT *NUT*	1	-
187	593824001	STUD *STUD*	1	-
189	536050602	LINK	1	-

Ref.	Article N.	Description	Qty	Kit
190	532196539	BOLT *BOLT*	1	-
192	532198468	BELT GUIDE *BELT GUIDE*	1	-
194	874490736	BOLT *BOLT*	1	-
196	596337801	BOLT *BOLT*	1	-
241	532137729	SCREW	1	-
242	532415598	HOSE COUPLING *HOSE COUPLING*	1	-
243	532416405	COUPLING *COUPLING*	1	-
1	900000002	DUMMY PART	1	-
1	536178101	SEAT *SEAT*	1	-
2	597329902	BRACKET *BRACKET*	1	-
3	590777602	BRACKET *BRACKET*	1	-
6	521996502	NUT *NUT*	1	-
8	532171877	BOLT *BOLT*	1	-
9	597785101	BUMPER *BUMPER*	1	-
10	597298202	BRACKET *BRACKET*	1	-
19	597783101	KNOB *KNOB*	1	-
21	596240701	BOLT *BOLT*	1	-
29	536960901	RETAINER *RETAINER*	1	-
30	597781801	BOLT *BOLT*	1	-
37	594944401	NUT *NUT*	1	-
43	597869301	BOLT *BOLT*	1	-
48	536990401	ARM REST KIT *ARM REST KIT*	1	-
1	597866101	SERVICE KIT	1	-

Ref.	Article N.	Description	Qty	Kit
		SERVICE KIT		
2	532195968	SHAFT *SHAFT*	1	-
4	536652702	SPINDLE *SPINDLE*	1	-
5	538691201	SPINDLE *SPINDLE*	1	-
6	532006266	WASHER *WASHER*	1	-
7	532121748	WASHER *WASHER*	1	-
8	812000029	RETAINER RING *RETAINER RING*	1	-
9	532121232	HUB CAP *HUB CAP*	1	-
13	532121749	WASHER *WASHER*	1	-
14	596238701	WASHER *WASHER*	1	-
15	873540600	NUT *NUT*	1	-
16	587016002	SHAFT *SHAFT*	1	-
19	532194729	PLATE *PLATE*	1	-
21	586840201	ADAPTER *ADAPTER*	1	-
22	585029802	BEARING *BEARING*	1	-
26	594949101	CAP *CAP*	1	-
27	596933401	WASHER *WASHER*	1	-
28	817000612	SCREW *SCREW*	1	-
35	532194732	PLATE *PLATE*	1	-
45	587016401	WASHER *WASHER*	1	-
50	873900600	NUT *NUT*	1	-
53	532188967	WASHER *WASHER*	1	-

Ref.	Article N.	Description	Qty	Kit
57	532197246	BRACKET *BRACKET*	1	-
58	532194747	BOLT *BOLT*	1	-
59	532194748	WASHER *WASHER*	1	-
60	873971000	NUT *NUT*	1	-
61	597070202	LINKAGE *LINKAGE*	1	-
62	597070302	LINKAGE *LINKAGE*	1	-
63	817000512	SCREW *SCREW*	1	-
64	532199849	SPRING RETAINER *SPRING RETAINER*	1	-
66	871020748	BOLT *BOLT*	1	-
67	529496302	BUSHING *BUSHING*	1	-
68	873900700	NUT *NUT*	1	-
69	532199162	WASHER *WASHER*	1	-
70	585338801	BRACKET *BRACKET*	1	-
75	580683701	PINION *PINION*	1	-
76	580683601	SCREW *SCREW*	1	-
122	532444962	CAP *CAP*	1	-
1	532059192	CAP *CAP*	1	-
2	532065139	NIPPLE *NIPPLE*	1	-
3	532138336	WHEEL RIM *RIM*	1	-
4	532059904	HOSE *HOSE*	1	-
5	532106222	TIRE *TIRE*	1	-
6	532000278	NIPPLE	1	-

Ref.	Article N.	Description	Qty	Kit
		NIPPLE		
7	532009040	BEARING *BEARING*	1	-
8	532175039	HUB CAP *HUB CAP*	1	-
9	532122082	TIRE *TIRE*	1	-
10	532007152	TUBE *TUBE*	1	-
11	532138337	RIM SPROCKET *RIM SPROCKET*	1	-
12	576707201	SEALANT *SEALANT*	1	-
2	532422027	SHAFT *SHAFT*	1	-
3	594018002	LEVER	1	-
7	580962301	GRIP *GRIP*	1	-
10	532196314	SPRING *SPRING*	1	-
87	532194209	SPRING *SPRING*	1	-
88	532410710	SPRING *SPRING*	1	-
89	819191912	WASHER *WASHER*	1	-
90	532194208	PIN *PIN*	1	-
91	589464805	LINK ASSY *LINK ASSY*	1	-
97	817000612	SCREW *SCREW*	1	-
98	581506902	LINK ASSY *LINK ASSY*	1	-
116	594976501	WASHER *WASHER*	1	-

SCHEMATIC

SCH12

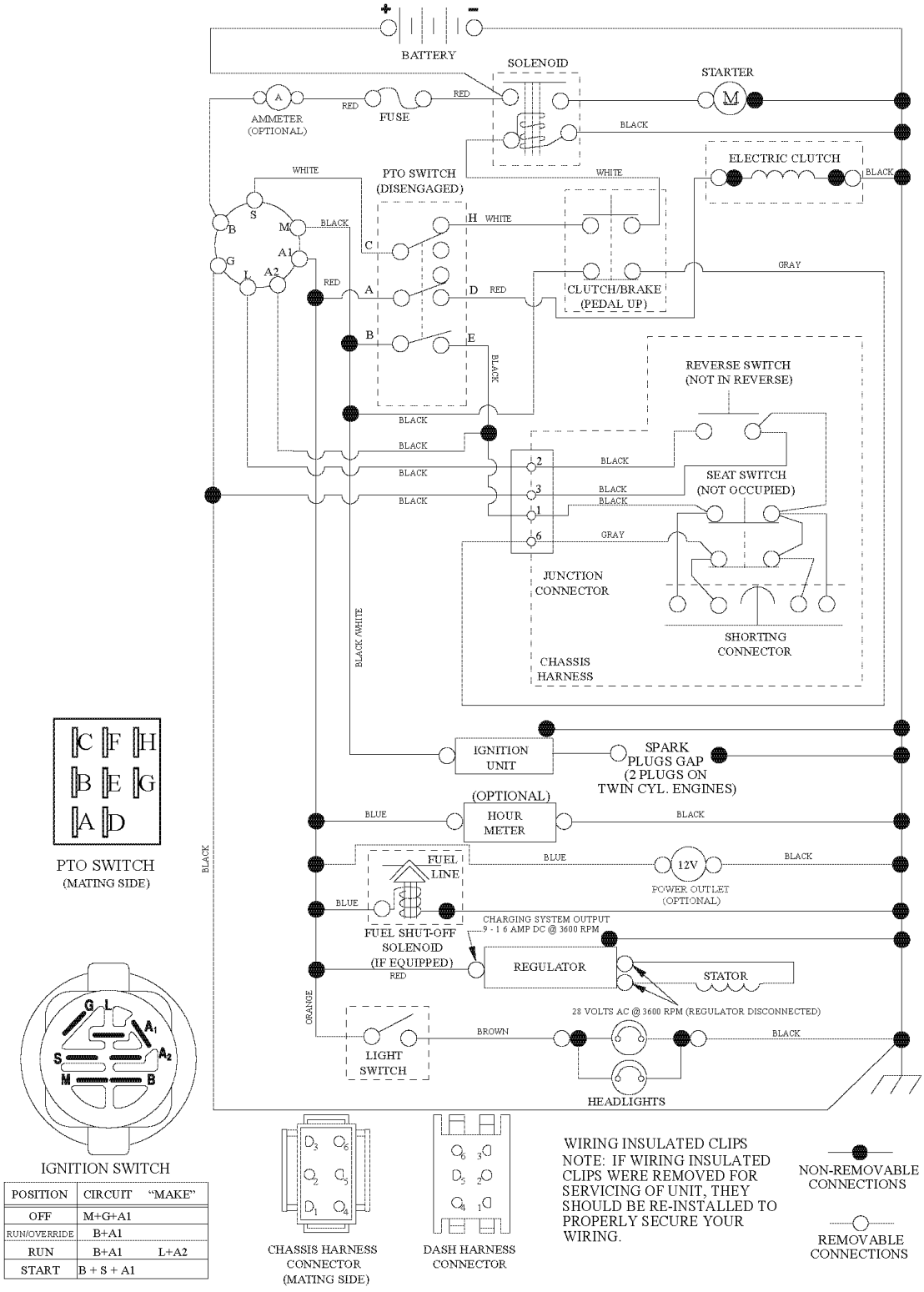

POSITION	CIRCUIT	"MAKE"
OFF	M+G+A1	
RUN/OVERRIDE	B+A1	
RUN	B+A1	L+A2
START	B + S + A1	

Ref.	Article N.	Description	Qty	Kit
3	597688201	COVER *COVER*	1	-
5	590748811	DASHBOARD *For 96043034100*	1	-
5	590748821	DASHBOARD *For 96043034800*	1	-

Ref.	Article N.	Description	Qty	Kit
14	532441177	HOOD *HOOD*	1	-
15	597867901	SERVICE KIT *SERVICE KIT*	1	-
18	597407102	GRILLE *GRILLE*	1	-
34	580910801	CHASSIS *CHASSIS*	1	-
36	817060512	SCREW *SCREW*	1	-
37	532441178	FENDER *FENDER*	1	-
52	596040501	LOCK NUT *LOCKNUT*	1	-
58	532412280	PLATE *DRAWBAR*	1	-
68	596030701	SCREW *SCREW*	1	-
125	581684801	CLIP *CLIP*	1	-
130	596321701	SCREW *SCREW*	1	-
137	532407590	BUMPER *BUMPER*	1	-
146	581857901	BOLT *BOLT*	1	-
150	532439774	AIR DUCT *AIR DUCT*	1	-
151	532436670	BRACKET *BRACKET*	1	-
152	599961102	SHIELD *SHIELD*	1	-
161	532439781	FUEL *FUEL*	1	-
162	596134101	SCREW *SCREW*	1	-
165	532196826	BRACKET *BRACKET*	1	-
175	590607702	CROSS MEMBER *CROSS MEMBER*	1	-
176	532400776	SCREW *SCREW*	1	-
177	532195228	BUSHING	1	-

Ref.	Article N.	Description	Qty	Kit
		BUSHING		
180	532415063	FRAME *CHASSIS*	1	-
182	532406859	DASH *DASH*	1	-
183	595305701	SCREW *SCREW*	1	-
189	817000512	SCREW *SCREW*	1	-
194	596135701	LOCK NUT *LOCK NUT*	1	-
195	532404137	PLUG *PLUG*	1	-
199	532413485	PLATE *For 96043034100*	1	-
199	596207202	PLATE *For 96043034800*	1	-
202	597867701	SERVICE KIT *SERVICE KIT*	1	-
204	597408001	VENT *VENT*	1	-
205	532439730	TRIM *TRIM*	1	-
206	532439729	TRIM *TRIM*	1	-
213	596030501	SCREW *SCREW*	1	-
214	532199145	CLIP *CLIP*	1	-
217	532409167	ROD *ROD*	1	-
218	532196395	PLATE *PLATE*	1	-
228	593824001	STUD *STUD*	1	-
233	532196539	BOLT *BOLT*	1	-
235	596564201	SPACER *SPACER*	1	-
236	873930500	NUT *NUT*	1	-
259	596434001	SCREW *SCREW*	1	-

Ref.	Article N.	Description	Qty	Kit
282	532414110	CLIP *CLIP*	1	-
283	532439823	CONSOLE *For 96043034100*	1	-
283	596304901	CONSOLE *For 96043034800*	1	-
284	532439861	CONSOLE *For 96043034100*	1	-
284	532439823	CONSOLE *For 96043034800*	1	-
285	532416315	CONSOLE *CONSOLE*	1	-
286	532416317	CONSOLE *CONSOLE*	1	-
287	817600406	SCREW *SCREW*	1	-
306	873900600	NUT *NUT*	1	-
335	532448204	COVER *COVER*	1	-
336	532445309	COVER *COVER*	1	-
350	532445143	CLIP *CLIP*	1	-
375	586908201	BUMPER *BUMPER*	1	-
378	590849801	BUSHING *BUSHING*	1	-
1	581579001	DECAL *DECAL*	1	-
2	531229002	DECAL *DECAL*	1	-
3	546812401	DECAL *DECAL*	1	-
4	581724501	DECAL *DECAL*	1	-
5	599966801	DECAL *DECAL*	1	-
6	546852001	DECAL *For 96043034100*	1	-
6	548111901	DECAL *For 96043034800*	1	-
7	584904602	DECAL	1	-

Ref.	Article N.	Description	Qty	Kit
		DECAL		
8	581724802	DECAL *DECAL*	1	-
9	532439681	PLATE *PAD*	1	-
10	532439682	PAD *PAD*	1	-
1	532426120	TRANSAXLE	1	-
2	532123583	KEY *KEY*	1	-
3	532407287	PULLEY *IDLER*	1	-
15	596565301	WASHER *WASHER*	1	-
17	532413678	BRAKE SPRING *BRAKE SPRING*	1	-
26	532199679	SPRING *SPRING*	1	-
29	532403806	ROD *ROD*	1	-
33	812000001	RETAINER RING *RETAINER RING*	1	-
35	590605902	ROD *ROD*	1	-
37	532188967	WASHER *WASHER*	1	-
42	532008883	PEDAL *PEDAL*	1	-
49	596136201	BOLT *BOLT*	1	-
50	532194327	PULLEY *PULLEY*	1	-
51	873900600	NUT *NUT*	1	-
52	532194326	PULLEY *PULLEY*	1	-
56	592855201	DRIVE BELT *BELT*	1	-
64	532197865	SHAFT *SHAFT*	1	-
69	532423303	HAIR PIN COTTER *HAIR PIN COTTER*	1	-
73	596136501	BOLT	1	-

Ref.	Article N.	Description	Qty	Kit
		BOLT		
92	595305701	SCREW *SCREW*	1	-
99	582404501	ROD *ROD*	1	-
116	596135701	LOCK NUT *LOCK NUT*	1	-
125	817000512	SCREW *SCREW*	1	-
143	596030701	SCREW *SCREW*	1	-
153	532004497	CLIP *CLIP*	1	-
159	596029501	PIN *PIN*	1	-
161	532105709	SPRING *SPRING*	1	-
163	593861001	ROD *ROD*	1	-
166	532429164	NUT *NUT*	1	-
167	532405257	LATCH *LATCH*	1	-
170	532413430	BELT GUIDE *KEEPER*	1	-
177	587225301	PIN *PIN*	1	-
183	532137057	SPACER *SPACER*	1	-
184	587653701	HANDLE *HANDLE*	1	-
185	872110622	BOLT *BOLT*	1	-
186	532194321	SPACER *SPACER*	1	-
187	596135501	WASHER *WASHER*	1	-
188	582217001	LINK *LINK*	1	-
189	532194317	PLATE *PLATE*	1	-
190	532194318	BELT GUIDE *BELT GUIDE*	1	-

Ref.	Article N.	Description	Qty	Kit
196	817000616	SCREW *SCREW*	1	-
197	585658602	BOSS *BOSS*	1	-
205	532121748	WASHER *WASHER*	1	-
206	532448596	BRACKET *BRACKET*	1	-
207	587031402	LATCH *LATCH*	1	-
208	596564101	GEAR *GEAR*	1	-
209	590527802	ROD *ROD*	1	-
210	532400980	PEDAL ARM *PEDAL ARM*	1	-
211	532120183	BEARING *BEARING*	1	-
213	532403119	CONTROL *CONTROL*	1	-
214	532421263	PAD *PAD*	1	-
215	586606502	PEDAL *PEDAL*	1	-
216	532196131	BRACKET *BRACKET*	1	-
221	532403187	SPRING *SPRING*	1	-
222	879212010	WASHER *WASHER*	1	-
223	598662601	BOLT *BOLT*	1	-
225	532403319	BELT GUIDE *BELT GUIDE*	1	-
227	596135901	BOLT *BOLT*	1	-
325	586431203	BRACKET *BRACKET*	1	-
326	586001103	BRACKET *BRACKET*	1	-
334	585882202	BRACKET *BRACKET*	1	-
336	587259602	BOLT	1	-

Ref.	Article N.	Description	Qty	Kit
		BOLT		
1	532163465	BATTERY *BATTERY*	1	-
2	874760412	BOLT *BOLT*	1	-
8	587205101	TRAY *TRAY*	1	-
16	532176138	MICRO SWITCH *MICRO SWITCH*	1	-
21	585436402	HARNESS *HARNESS*	1	-
24	585555601	CABLE *CABLE*	1	-
25	585555501	CABLE *CABLE*	1	-
26	532175158	FUSE *FUSE*	1	-
27	596133601	LOCK NUT *LOCK NUT*	1	-
28	532416588	CABLE *CABLE*	1	-
29	532192749	SWITCH *SWITCH*	1	-
30	532193350	IGNITION MODULE *IGNITION MODULE*	1	-
33	532411935	KEY *KEY*	1	-
34	532110712	SWITCH *SWITCH*	1	-
40	501132901	HARNESS *HARNESS*	1	-
41	817720408	SCREW *SCREW*	1	-
42	532131563	COVER *COVER*	1	-
43	582042802	SOLENOID *SOLENOID*	1	-
46	594919101	HOUR METER *HOUR METER*	1	-
50	582107602	SWITCH *SWITCH*	1	-
55	817060512	SCREW *SCREW*	1	-

Ref.	Article N.	Description	Qty	Kit
71	532194276	CABLE ASSY *CABLE ASSY*	1	-
79	597523001	LIGHT *LIGHT*	1	-
90	532435395	TERMINAL COVER *TERMINAL COVER*	1	-
99	817670412	SCREW *SCREW*	1	-
100	596135301	WASHER *WASHER*	1	-
102	532404454	CABLE *CABLE*	1	-
105	532407568	SWITCH *SWITCH*	1	-
1	900000002	DUMMY PART *ENGINE*	1	-
2	589818702	MUFFLER *MUFFLER*	1	-
9	596501502	KEEPER *KEEPER*	1	-
11	587241601	CLUTCH *CLUTCH*	1	-
12	532405097	PULLEY *PULLEY*	1	-
15	599306004	FUEL TANK ASSY *FUEL TANK*	1	-
18	529989702	CAP *FUEL CAP*	1	-
20	587242504	THROTTLE *THROTTLE*	1	-
21	596321701	SCREW *SCREW*	1	-
28	532401135	LINE *FUEL LINE*	1	-
29	532137180	SPARK ARRESTER *SPARK ARRESTER KIT*	1	-
37	532123487	HOSE CLAMP *HOSE CLAMP*	1	-
41	532126197	WASHER *WASHER*	1	-
42	596238901	WASHER *WASHER*	1	-
45	596133601	LOCK NUT	1	-

Ref.	Article N.	Description	Qty	Kit
		LOCKNUT		
62	532434017	SHIELD *SHIELD*	1	-
69	532165391	GASKET *GASKET*	1	-
70	581881101	TUBE *TUBE.LH*	1	-
71	581881001	TUBE *TUBE. RH*	1	-
79	596134202	SCREW *SCREW*	1	-
81	532148456	TUBE *TUBE*	1	-
82	532428287	PLUG *PLUG*	1	-
84	817060620	SCREW *SCREW*	1	-
85	501606601	BOLT *BOLT*	1	-
90	817000616	SCREW *SCREW*	1	-
91	532187495	BUSHING *BUSHING*	1	-
102	817000512	SCREW *SCREW*	1	-
1	900000002	DUMMY PART *ENGINE MODEL NO. Kawa FR730V-AS40 (546841501)*	1	-
2	589818702	MUFFLER *MUFFLER*	1	-
9	596501502	KEEPER *KEEPER*	1	-
11	587241601	CLUTCH *CLUTCH*	1	-
12	532405097	PULLEY *PULLEY*	1	-
15	599306003	FUEL TANK ASSY *FUEL TANK*	1	-
18	585124801	FUEL CAP ASSY *FUEL CAP ASSY*	1	-
18	529989702	CAP *FUEL CAP ASSY*	1	-
20	532424341	THROTTLE CONTROL *THROTTLE*	1	-

Ref.	Article N.	Description	Qty	Kit
21	532438562	SCREW *SCREW*	1	-
22	532187768	CONTROL *CHOKE*	1	-
28	532401135	LINE *LINE.FUEL.64REAR.EMIS*	1	-
29	532137180	SPARK ARRESTER *SPARK ARRESTER*	1	-
37	532123487	HOSE CLAMP *HOSE CLAMP*	1	-
41	532126197	WASHER *WASHER*	1	-
42	596238901	WASHER *WASHER*	1	-
45	596133601	LOCK NUT *LOCK NUT*	1	-
62	532434017	SHIELD *SHIELD*	1	-
69	532178151	GASKET *GASKET MUFFLER*	1	-
70	583955601	TUBE *TUBE*	1	-
70	583955701	TUBE *TUBE*	1	-
81	532148456	TUBE *TUBE*	1	-
85	501606601	BOLT *BOLT*	1	-
86	532184362	NUT *NUT*	1	-
90	817000616	SCREW *SCREW*	1	-
91	532187495	BUSHING *BUSHING*	1	-
92	817120616	SCREW *SCREW*	1	-
102	817000512	SCREW *SCREW*	1	-
116	539132624	KNOB *KNOB-SHIFT*	1	-
1	532418229	DECK ASSY *DECK*	1	-
1	532418230	DECK	1	-

Ref.	Article N.	Description	Qty	Kit
		DECK		
6	532196066	COVER *COVER*	1	-
7	532197181	COVER *COVER*	1	-
11	532187256	RIDE ON BLADE *BLADE*	1	-
12	532404851	ROD *ROD*	1	-
14	587125401	MANDREL *MANDREL*	1	-
16	596133201	WASHER *WASHER*	1	-
19	532194208	PIN *PIN*	1	-
21	596040501	LOCK NUT *LOCK NUT*	1	-
24	532105304	HUB CAP *HUB CAP*	1	-
25	539107609	SPRING *SPIRNG*	1	-
26	532110452	NUT *NUT*	1	-
27	532187257	DEFLECTOR *DEFLECTOR*	1	-
29	595297001	ROD *ROD*	1	-
32	532173436	PULLEY *PULLEY*	1	-
33	596134801	HEXAGON NUT *HEXAGON NUT*	1	-
34	596322601	NUT *NUT*	1	-
35	584309301	SCREW *SCREW*	1	-
39	532197380	PULLEY *PULLEY*	1	-
41	584953901	BOLT *BOLT*	1	-
43	531169301	SERVICE KIT *SERVICE KIT*	1	-
46	532137729	SCREW *SCREW*	1	-

Ref.	Article N.	Description	Qty	Kit
47	587686701	DRIVE BELT *BELT*	1	-
49	532409149	NUT *NUT*	1	-
50	596136301	BOLT *BOLT*	1	-
52	532196106	PULLEY *PULLEY*	1	-
58	532187342	BAFFLE *BAFFLE*	1	-
59	531168701	SERVICE KIT *SERVICE KIT*	1	-
60	531168801	SERVICE KIT *SERVICE KIT*	1	-
61	585322605	REINFORCEMENT PLATE *REINFORCEMENT PLATE*	1	-
62	585322805	REINFORCEMENT PLATE *REINFORCEMENT PLATE*	1	-
63	596039401	BOLT *BOLT*	1	-
97	532178515	WASHER *WASHER*	1	-
98	532196105	SPRING *SPRING*	1	-
113	596435701	BOLT *BOLT*	1	-
114	532187556	ROD *ROD TENSION RELIEF*	1	-
116	596434404	BOLT *BOLT*	1	-
117	589527301	WHEEL *WHEEL*	1	-
120	596134901	WASHER *WASHER*	1	-
122	532187557	BUSHING *BUSHING*	1	-
184	596135701	LOCK NUT *LOCK NUT*	1	-
185	873900700	NUT *NUT*	1	-
187	593824001	STUD *STUD*	1	-
189	536050602	LINK	1	-

Ref.	Article N.	Description	Qty	Kit
190	532196539	BOLT *BOLT*	1	-
192	532198468	BELT GUIDE *BELT GUIDE*	1	-
194	874490736	BOLT *BOLT*	1	-
196	596337801	BOLT *BOLT*	1	-
241	532137729	SCREW	1	-
242	532415598	HOSE COUPLING *HOSE COUPLING*	1	-
243	532416405	COUPLING *COUPLING*	1	-
1	900000002	DUMMY PART	1	-
1	536178101	SEAT *SEAT*	1	-
2	597329902	BRACKET *BRACKET*	1	-
3	590777602	BRACKET *BRACKET*	1	-
6	521996502	NUT *NUT*	1	-
8	532171877	BOLT *BOLT*	1	-
9	597785101	BUMPER *BUMPER*	1	-
10	597298202	BRACKET *BRACKET*	1	-
19	597783101	KNOB *KNOB*	1	-
21	596240701	BOLT *BOLT*	1	-
29	536960901	RETAINER *RETAINER*	1	-
30	597781801	BOLT *BOLT*	1	-
37	594944401	NUT *NUT*	1	-
43	597869301	BOLT *BOLT*	1	-
48	536990401	ARM REST KIT *ARM REST KIT*	1	-
1	597866101	SERVICE KIT	1	-

Ref.	Article N.	Description	Qty	Kit
		SERVICE KIT		
2	532195968	SHAFT *SHAFT*	1	-
4	536652702	SPINDLE *SPINDLE*	1	-
5	538691201	SPINDLE *SPINDLE*	1	-
6	532006266	WASHER *WASHER*	1	-
7	532121748	WASHER *WASHER*	1	-
8	812000029	RETAINER RING *RETAINER RING*	1	-
9	532121232	HUB CAP *HUB CAP*	1	-
13	532121749	WASHER *WASHER*	1	-
14	596238701	WASHER *WASHER*	1	-
15	873540600	NUT *NUT*	1	-
16	587016002	SHAFT *SHAFT*	1	-
19	532194729	PLATE *PLATE*	1	-
21	586840201	ADAPTER *ADAPTER*	1	-
22	585029802	BEARING *BEARING*	1	-
26	594949101	CAP *CAP*	1	-
27	596933401	WASHER *WASHER*	1	-
28	817000612	SCREW *SCREW*	1	-
35	532194732	PLATE *PLATE*	1	-
45	587016401	WASHER *WASHER*	1	-
50	873900600	NUT *NUT*	1	-
53	532188967	WASHER *WASHER*	1	-

Ref.	Article N.	Description	Qty	Kit
57	532197246	BRACKET *BRACKET*	1	-
58	532194747	BOLT *BOLT*	1	-
59	532194748	WASHER *WASHER*	1	-
60	873971000	NUT *NUT*	1	-
61	597070202	LINKAGE *LINKAGE*	1	-
62	597070302	LINKAGE *LINKAGE*	1	-
63	817000512	SCREW *SCREW*	1	-
64	532199849	SPRING RETAINER *SPRING RETAINER*	1	-
66	871020748	BOLT *BOLT*	1	-
67	529496302	BUSHING *BUSHING*	1	-
68	873900700	NUT *NUT*	1	-
69	532199162	WASHER *WASHER*	1	-
70	585338801	BRACKET *BRACKET*	1	-
75	580683701	PINION *PINION*	1	-
76	580683601	SCREW *SCREW*	1	-
122	532444962	CAP *CAP*	1	-
1	532059192	CAP *CAP*	1	-
2	532065139	NIPPLE *NIPPLE*	1	-
3	532138336	WHEEL RIM *RIM*	1	-
4	532059904	HOSE *HOSE*	1	-
5	532106222	TIRE *TIRE*	1	-
6	532000278	NIPPLE	1	-

Ref.	Article N.	Description	Qty	Kit
		NIPPLE		
7	532009040	BEARING *BEARING*	1	-
8	532175039	HUB CAP *HUB CAP*	1	-
9	532122082	TIRE *TIRE*	1	-
10	532007152	TUBE *TUBE*	1	-
11	532138337	RIM SPROCKET *RIM SPROCKET*	1	-
12	576707201	SEALANT *SEALANT*	1	-
2	532422027	SHAFT *SHAFT*	1	-
3	594018002	LEVER	1	-
7	580962301	GRIP *GRIP*	1	-
10	532196314	SPRING *SPRING*	1	-
87	532194209	SPRING *SPRING*	1	-
88	532410710	SPRING *SPRING*	1	-
89	819191912	WASHER *WASHER*	1	-
90	532194208	PIN *PIN*	1	-
91	589464805	LINK ASSY *LINK ASSY*	1	-
97	817000612	SCREW *SCREW*	1	-
98	581506902	LINK ASSY *LINK ASSY*	1	-
116	594976501	WASHER *WASHER*	1	-

SEAT

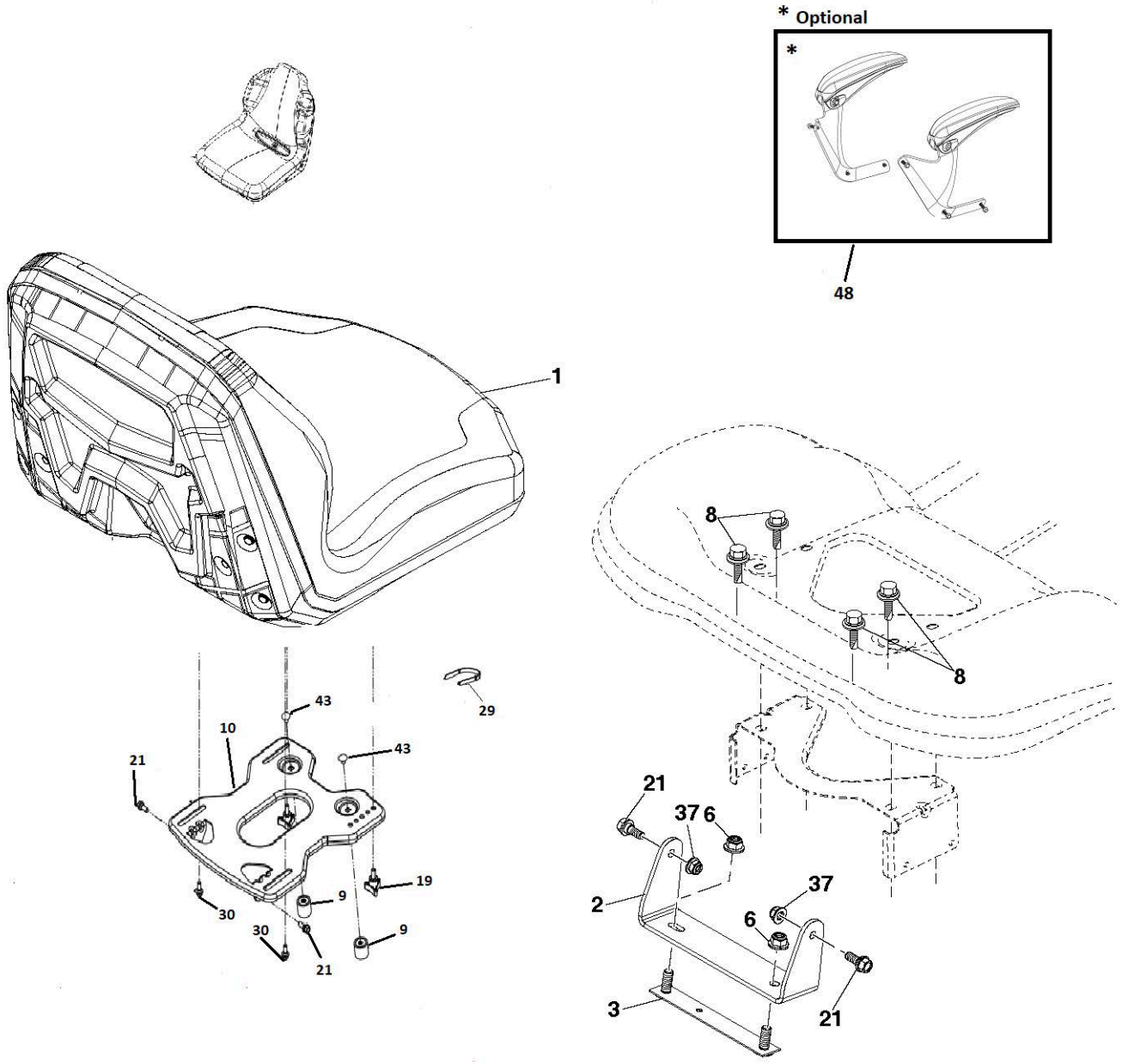

Ref.	Article N.	Description	Qty	Kit
3	597688201	COVER *COVER*	1	-
5	590748811	DASHBOARD *For 96043034100*	1	-
5	590748821	DASHBOARD *For 96043034800*	1	-
14	532441177	HOOD *HOOD*	1	-
15	597867901	SERVICE KIT *SERVICE KIT*	1	-
18	597407102	GRILLE *GRILLE*	1	-

Ref.	Article N.	Description	Qty	Kit
34	580910801	CHASSIS *CHASSIS*	1	-
36	817060512	SCREW *SCREW*	1	-
37	532441178	FENDER *FENDER*	1	-
52	596040501	LOCK NUT *LOCKNUT*	1	-
58	532412280	PLATE *DRAWBAR*	1	-
68	596030701	SCREW *SCREW*	1	-
125	581684801	CLIP *CLIP*	1	-
130	596321701	SCREW *SCREW*	1	-
137	532407590	BUMPER *BUMPER*	1	-
146	581857901	BOLT *BOLT*	1	-
150	532439774	AIR DUCT *AIR DUCT*	1	-
151	532436670	BRACKET *BRACKET*	1	-
152	599961102	SHIELD *SHIELD*	1	-
161	532439781	FUEL *FUEL*	1	-
162	596134101	SCREW *SCREW*	1	-
165	532196826	BRACKET *BRACKET*	1	-
175	590607702	CROSS MEMBER *CROSS MEMBER*	1	-
176	532400776	SCREW *SCREW*	1	-
177	532195228	BUSHING *BUSHING*	1	-
180	532415063	FRAME *CHASSIS*	1	-
182	532406859	DASH *DASH*	1	-
183	595305701	SCREW	1	-

Ref.	Article N.	Description	Qty	Kit
		SCREW		
189	817000512	SCREW *SCREW*	1	-
194	596135701	LOCK NUT *LOCK NUT*	1	-
195	532404137	PLUG *PLUG*	1	-
199	532413485	PLATE *For 96043034100*	1	-
199	596207202	PLATE *For 96043034800*	1	-
202	597867701	SERVICE KIT *SERVICE KIT*	1	-
204	597408001	VENT *VENT*	1	-
205	532439730	TRIM *TRIM*	1	-
206	532439729	TRIM *TRIM*	1	-
213	596030501	SCREW *SCREW*	1	-
214	532199145	CLIP *CLIP*	1	-
217	532409167	ROD *ROD*	1	-
218	532196395	PLATE *PLATE*	1	-
228	593824001	STUD *STUD*	1	-
233	532196539	BOLT *BOLT*	1	-
235	596564201	SPACER *SPACER*	1	-
236	873930500	NUT *NUT*	1	-
259	596434001	SCREW *SCREW*	1	-
282	532414110	CLIP *CLIP*	1	-
283	532439823	CONSOLE *For 96043034100*	1	-
283	596304901	CONSOLE *For 96043034800*	1	-

Ref.	Article N.	Description	Qty	Kit
284	532439861	CONSOLE *For 96043034100*	1	-
284	532439823	CONSOLE *For 96043034800*	1	-
285	532416315	CONSOLE *CONSOLE*	1	-
286	532416317	CONSOLE *CONSOLE*	1	-
287	817600406	SCREW *SCREW*	1	-
306	873900600	NUT *NUT*	1	-
335	532448204	COVER *COVER*	1	-
336	532445309	COVER *COVER*	1	-
350	532445143	CLIP *CLIP*	1	-
375	586908201	BUMPER *BUMPER*	1	-
378	590849801	BUSHING *BUSHING*	1	-
1	581579001	DECAL *DECAL*	1	-
2	531229002	DECAL *DECAL*	1	-
3	546812401	DECAL *DECAL*	1	-
4	581724501	DECAL *DECAL*	1	-
5	599966801	DECAL *DECAL*	1	-
6	546852001	DECAL *For 96043034100*	1	-
6	548111901	DECAL *For 96043034800*	1	-
7	584904602	DECAL *DECAL*	1	-
8	581724802	DECAL *DECAL*	1	-
9	532439681	PLATE *PAD*	1	-
10	532439682	PAD	1	-

Ref.	Article N.	Description	Qty	Kit
		PAD		
1	532426120	TRANSAXLE	1	-
2	532123583	KEY *KEY*	1	-
3	532407287	PULLEY *IDLER*	1	-
15	596565301	WASHER *WASHER*	1	-
17	532413678	BRAKE SPRING *BRAKE SPRING*	1	-
26	532199679	SPRING *SPRING*	1	-
29	532403806	ROD *ROD*	1	-
33	812000001	RETAINER RING *RETAINER RING*	1	-
35	590605902	ROD *ROD*	1	-
37	532188967	WASHER *WASHER*	1	-
42	532008883	PEDAL *PEDAL*	1	-
49	596136201	BOLT *BOLT*	1	-
50	532194327	PULLEY *PULLEY*	1	-
51	873900600	NUT *NUT*	1	-
52	532194326	PULLEY *PULLEY*	1	-
56	592855201	DRIVE BELT *BELT*	1	-
64	532197865	SHAFT *SHAFT*	1	-
69	532423303	HAIR PIN COTTER *HAIR PIN COTTER*	1	-
73	596136501	BOLT *BOLT*	1	-
92	595305701	SCREW *SCREW*	1	-
99	582404501	ROD *ROD*	1	-
116	596135701	LOCK NUT	1	-

Ref.	Article N.	Description	Qty	Kit
		LOCK NUT		
125	817000512	SCREW *SCREW*	1	-
143	596030701	SCREW *SCREW*	1	-
153	532004497	CLIP *CLIP*	1	-
159	596029501	PIN *PIN*	1	-
161	532105709	SPRING *SPRING*	1	-
163	593861001	ROD *ROD*	1	-
166	532429164	NUT *NUT*	1	-
167	532405257	LATCH *LATCH*	1	-
170	532413430	BELT GUIDE *KEEPER*	1	-
177	587225301	PIN *PIN*	1	-
183	532137057	SPACER *SPACER*	1	-
184	587653701	HANDLE *HANDLE*	1	-
185	872110622	BOLT *BOLT*	1	-
186	532194321	SPACER *SPACER*	1	-
187	596135501	WASHER *WASHER*	1	-
188	582217001	LINK *LINK*	1	-
189	532194317	PLATE *PLATE*	1	-
190	532194318	BELT GUIDE *BELT GUIDE*	1	-
196	817000616	SCREW *SCREW*	1	-
197	585658602	BOSS *BOSS*	1	-
205	532121748	WASHER *WASHER*	1	-

Ref.	Article N.	Description	Qty	Kit
206	532448596	BRACKET *BRACKET*	1	-
207	587031402	LATCH *LATCH*	1	-
208	596564101	GEAR *GEAR*	1	-
209	590527802	ROD *ROD*	1	-
210	532400980	PEDAL ARM *PEDAL ARM*	1	-
211	532120183	BEARING *BEARING*	1	-
213	532403119	CONTROL *CONTROL*	1	-
214	532421263	PAD *PAD*	1	-
215	586606502	PEDAL *PEDAL*	1	-
216	532196131	BRACKET *BRACKET*	1	-
221	532403187	SPRING *SPRING*	1	-
222	879212010	WASHER *WASHER*	1	-
223	598662601	BOLT *BOLT*	1	-
225	532403319	BELT GUIDE *BELT GUIDE*	1	-
227	596135901	BOLT *BOLT*	1	-
325	586431203	BRACKET *BRACKET*	1	-
326	586001103	BRACKET *BRACKET*	1	-
334	585882202	BRACKET *BRACKET*	1	-
336	587259602	BOLT *BOLT*	1	-
1	532163465	BATTERY *BATTERY*	1	-
2	874760412	BOLT *BOLT*	1	-
8	587205101	TRAY	1	-

Ref.	Article N.	Description	Qty	Kit
		TRAY		
16	532176138	MICRO SWITCH *MICRO SWITCH*	1	-
21	585436402	HARNESS *HARNESS*	1	-
24	585555601	CABLE *CABLE*	1	-
25	585555501	CABLE *CABLE*	1	-
26	532175158	FUSE *FUSE*	1	-
27	596133601	LOCK NUT *LOCK NUT*	1	-
28	532416588	CABLE *CABLE*	1	-
29	532192749	SWITCH *SWITCH*	1	-
30	532193350	IGNITION MODULE *IGNITION MODULE*	1	-
33	532411935	KEY *KEY*	1	-
34	532110712	SWITCH *SWITCH*	1	-
40	501132901	HARNESS *HARNESS*	1	-
41	817720408	SCREW *SCREW*	1	-
42	532131563	COVER *COVER*	1	-
43	582042802	SOLENOID *SOLENOID*	1	-
46	594919101	HOUR METER *HOUR METER*	1	-
50	582107602	SWITCH *SWITCH*	1	-
55	817060512	SCREW *SCREW*	1	-
71	532194276	CABLE ASSY *CABLE ASSY*	1	-
79	597523001	LIGHT *LIGHT*	1	-
90	532435395	TERMINAL COVER *TERMINAL COVER*	1	-

Ref.	Article N.	Description	Qty	Kit
99	817670412	SCREW *SCREW*	1	-
100	596135301	WASHER *WASHER*	1	-
102	532404454	CABLE *CABLE*	1	-
105	532407568	SWITCH *SWITCH*	1	-
1	900000002	DUMMY PART *ENGINE*	1	-
2	589818702	MUFFLER *MUFFLER*	1	-
9	596501502	KEEPER *KEEPER*	1	-
11	587241601	CLUTCH *CLUTCH*	1	-
12	532405097	PULLEY *PULLEY*	1	-
15	599306004	FUEL TANK ASSY *FUEL TANK*	1	-
18	529989702	CAP *FUEL CAP*	1	-
20	587242504	THROTTLE *THROTTLE*	1	-
21	596321701	SCREW *SCREW*	1	-
28	532401135	LINE *FUEL LINE*	1	-
29	532137180	SPARK ARRESTER *SPARK ARRESTER KIT*	1	-
37	532123487	HOSE CLAMP *HOSE CLAMP*	1	-
41	532126197	WASHER *WASHER*	1	-
42	596238901	WASHER *WASHER*	1	-
45	596133601	LOCK NUT *LOCKNUT*	1	-
62	532434017	SHIELD *SHIELD*	1	-
69	532165391	GASKET *GASKET*	1	-
70	581881101	TUBE	1	-

Ref.	Article N.	Description	Qty	Kit
		TUBE.LH		
71	581881001	TUBE *TUBE. RH*	1	-
79	596134202	SCREW *SCREW*	1	-
81	532148456	TUBE *TUBE*	1	-
82	532428287	PLUG *PLUG*	1	-
84	817060620	SCREW *SCREW*	1	-
85	501606601	BOLT *BOLT*	1	-
90	817000616	SCREW *SCREW*	1	-
91	532187495	BUSHING *BUSHING*	1	-
102	817000512	SCREW *SCREW*	1	-
1	900000002	DUMMY PART *ENGINE MODEL NO. Kawa FR730V-AS40 (546841501)*	1	-
2	589818702	MUFFLER *MUFFLER*	1	-
9	596501502	KEEPER *KEEPER*	1	-
11	587241601	CLUTCH *CLUTCH*	1	-
12	532405097	PULLEY *PULLEY*	1	-
15	599306003	FUEL TANK ASSY *FUEL TANK*	1	-
18	585124801	FUEL CAP ASSY *FUEL CAP ASSY*	1	-
18	529989702	CAP *FUEL CAP ASSY*	1	-
20	532424341	THROTTLE CONTROL *THROTTLE*	1	-
21	532438562	SCREW *SCREW*	1	-
22	532187768	CONTROL *CHOKE*	1	-
28	532401135	LINE *LINE.FUEL.64REAR.EMIS*	1	-

Ref.	Article N.	Description	Qty	Kit
29	532137180	SPARK ARRESTER *SPARK ARRESTER*	1	-
37	532123487	HOSE CLAMP *HOSE CLAMP*	1	-
41	532126197	WASHER *WASHER*	1	-
42	596238901	WASHER *WASHER*	1	-
45	596133601	LOCK NUT *LOCK NUT*	1	-
62	532434017	SHIELD *SHIELD*	1	-
69	532178151	GASKET *GASKET MUFFLER*	1	-
70	583955601	TUBE *TUBE*	1	-
70	583955701	TUBE *TUBE*	1	-
81	532148456	TUBE *TUBE*	1	-
85	501606601	BOLT *BOLT*	1	-
86	532184362	NUT *NUT*	1	-
90	817000616	SCREW *SCREW*	1	-
91	532187495	BUSHING *BUSHING*	1	-
92	817120616	SCREW *SCREW*	1	-
102	817000512	SCREW *SCREW*	1	-
116	539132624	KNOB *KNOB-SHIFT*	1	-
1	532418229	DECK ASSY *DECK*	1	-
1	532418230	DECK *DECK*	1	-
6	532196066	COVER *COVER*	1	-
7	532197181	COVER *COVER*	1	-
11	532187256	RIDE ON BLADE	1	-

Ref.	Article N.	Description	Qty	Kit
		BLADE		
12	532404851	ROD *ROD*	1	-
14	587125401	MANDREL *MANDREL*	1	-
16	596133201	WASHER *WASHER*	1	-
19	532194208	PIN *PIN*	1	-
21	596040501	LOCK NUT *LOCK NUT*	1	-
24	532105304	HUB CAP *HUB CAP*	1	-
25	539107609	SPRING *SPIRNG*	1	-
26	532110452	NUT *NUT*	1	-
27	532187257	DEFLECTOR *DEFLECTOR*	1	-
29	595297001	ROD *ROD*	1	-
32	532173436	PULLEY *PULLEY*	1	-
33	596134801	HEXAGON NUT *HEXAGON NUT*	1	-
34	596322601	NUT *NUT*	1	-
35	584309301	SCREW *SCREW*	1	-
39	532197380	PULLEY *PULLEY*	1	-
41	584953901	BOLT *BOLT*	1	-
43	531169301	SERVICE KIT *SERVICE KIT*	1	-
46	532137729	SCREW *SCREW*	1	-
47	587686701	DRIVE BELT *BELT*	1	-
49	532409149	NUT *NUT*	1	-
50	596136301	BOLT *BOLT*	1	-

Ref.	Article N.	Description	Qty	Kit
52	532196106	PULLEY *PULLEY*	1	-
58	532187342	BAFFLE *BAFFLE*	1	-
59	531168701	SERVICE KIT *SERVICE KIT*	1	-
60	531168801	SERVICE KIT *SERVICE KIT*	1	-
61	585322605	REINFORCEMENT PLATE *REINFORCEMENT PLATE*	1	-
62	585322805	REINFORCEMENT PLATE *REINFORCEMENT PLATE*	1	-
63	596039401	BOLT *BOLT*	1	-
97	532178515	WASHER *WASHER*	1	-
98	532196105	SPRING *SPRING*	1	-
113	596435701	BOLT *BOLT*	1	-
114	532187556	ROD *ROD TENSION RELIEF*	1	-
116	596434404	BOLT *BOLT*	1	-
117	589527301	WHEEL *WHEEL*	1	-
120	596134901	WASHER *WASHER*	1	-
122	532187557	BUSHING *BUSHING*	1	-
184	596135701	LOCK NUT *LOCK NUT*	1	-
185	873900700	NUT *NUT*	1	-
187	593824001	STUD *STUD*	1	-
189	536050602	LINK	1	-
190	532196539	BOLT *BOLT*	1	-
192	532198468	BELT GUIDE *BELT GUIDE*	1	-
194	874490736	BOLT *BOLT*	1	-

Ref.	Article N.	Description	Qty	Kit
196	596337801	BOLT *BOLT*	1	-
241	532137729	SCREW	1	-
242	532415598	HOSE COUPLING *HOSE COUPLING*	1	-
243	532416405	COUPLING *COUPLING*	1	-
1	900000002	DUMMY PART	1	-
1	536178101	SEAT *SEAT*	1	-
2	597329902	BRACKET *BRACKET*	1	-
3	590777602	BRACKET *BRACKET*	1	-
6	521996502	NUT *NUT*	1	-
8	532171877	BOLT *BOLT*	1	-
9	597785101	BUMPER *BUMPER*	1	-
10	597298202	BRACKET *BRACKET*	1	-
19	597783101	KNOB *KNOB*	1	-
21	596240701	BOLT *BOLT*	1	-
29	536960901	RETAINER *RETAINER*	1	-
30	597781801	BOLT *BOLT*	1	-
37	594944401	NUT *NUT*	1	-
43	597869301	BOLT *BOLT*	1	-
48	536990401	ARM REST KIT *ARM REST KIT*	1	-
1	597866101	SERVICE KIT *SERVICE KIT*	1	-
2	532195968	SHAFT *SHAFT*	1	-
4	536652702	SPINDLE *SPINDLE*	1	-
5	538691201	SPINDLE	1	-

Ref.	Article N.	Description	Qty	Kit
		SPINDLE		
6	532006266	WASHER *WASHER*	1	-
7	532121748	WASHER *WASHER*	1	-
8	812000029	RETAINER RING *RETAINER RING*	1	-
9	532121232	HUB CAP *HUB CAP*	1	-
13	532121749	WASHER *WASHER*	1	-
14	596238701	WASHER *WASHER*	1	-
15	873540600	NUT *NUT*	1	-
16	587016002	SHAFT *SHAFT*	1	-
19	532194729	PLATE *PLATE*	1	-
21	586840201	ADAPTER *ADAPTER*	1	-
22	585029802	BEARING *BEARING*	1	-
26	594949101	CAP *CAP*	1	-
27	596933401	WASHER *WASHER*	1	-
28	817000612	SCREW *SCREW*	1	-
35	532194732	PLATE *PLATE*	1	-
45	587016401	WASHER *WASHER*	1	-
50	873900600	NUT *NUT*	1	-
53	532188967	WASHER *WASHER*	1	-
57	532197246	BRACKET *BRACKET*	1	-
58	532194747	BOLT *BOLT*	1	-
59	532194748	WASHER *WASHER*	1	-

Ref.	Article N.	Description	Qty	Kit
60	873971000	NUT *NUT*	1	-
61	597070202	LINKAGE *LINKAGE*	1	-
62	597070302	LINKAGE *LINKAGE*	1	-
63	817000512	SCREW *SCREW*	1	-
64	532199849	SPRING RETAINER *SPRING RETAINER*	1	-
66	871020748	BOLT *BOLT*	1	-
67	529496302	BUSHING *BUSHING*	1	-
68	873900700	NUT *NUT*	1	-
69	532199162	WASHER *WASHER*	1	-
70	585338801	BRACKET *BRACKET*	1	-
75	580683701	PINION *PINION*	1	-
76	580683601	SCREW *SCREW*	1	-
122	532444962	CAP *CAP*	1	-
1	532059192	CAP *CAP*	1	-
2	532065139	NIPPLE *NIPPLE*	1	-
3	532138336	WHEEL RIM *RIM*	1	-
4	532059904	HOSE *HOSE*	1	-
5	532106222	TIRE *TIRE*	1	-
6	532000278	NIPPLE *NIPPLE*	1	-
7	532009040	BEARING *BEARING*	1	-
8	532175039	HUB CAP *HUB CAP*	1	-
9	532122082	TIRE	1	-

Ref.	Article N.	Description	Qty	Kit
		TIRE		
10	532007152	TUBE *TUBE*	1	-
11	532138337	RIM SPROCKET *RIM SPROCKET*	1	-
12	576707201	SEALANT *SEALANT*	1	-
2	532422027	SHAFT *SHAFT*	1	-
3	594018002	LEVER	1	-
7	580962301	GRIP *GRIP*	1	-
10	532196314	SPRING *SPRING*	1	-
87	532194209	SPRING *SPRING*	1	-
88	532410710	SPRING *SPRING*	1	-
89	819191912	WASHER *WASHER*	1	-
90	532194208	PIN *PIN*	1	-
91	589464805	LINK ASSY *LINK ASSY*	1	-
97	817000612	SCREW *SCREW*	1	-
98	581506902	LINK ASSY *LINK ASSY*	1	-
116	594976501	WASHER *WASHER*	1	-

STEERING

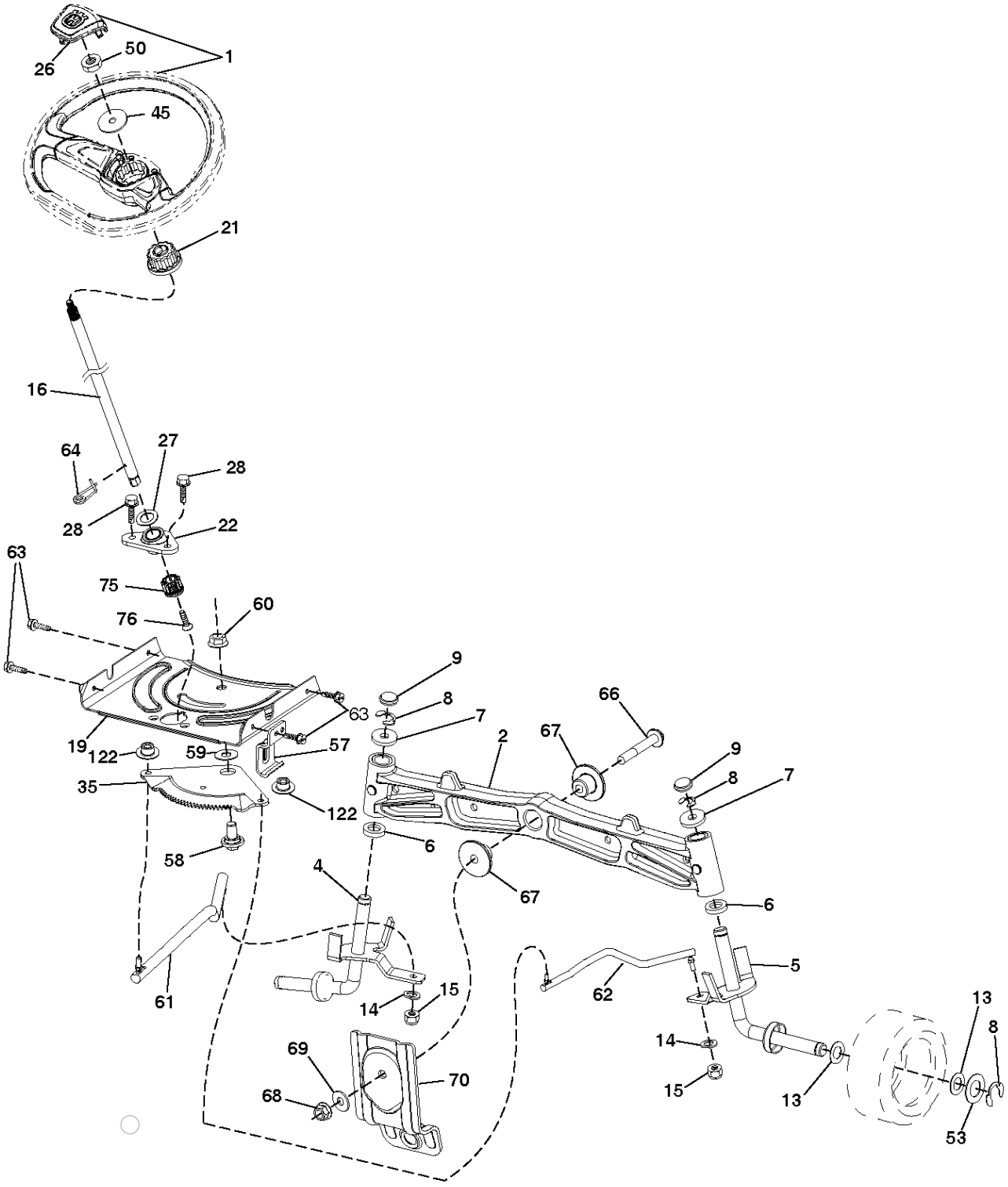

Ref.	Article N.	Description	Qty	Kit
3	597688201	COVER *COVER*	1	-
5	590748811	DASHBOARD *For 96043034100*	1	-
5	590748821	DASHBOARD *For 96043034800*	1	-

Ref.	Article N.	Description	Qty	Kit
14	532441177	HOOD *HOOD*	1	-
15	597867901	SERVICE KIT *SERVICE KIT*	1	-
18	597407102	GRILLE *GRILLE*	1	-
34	580910801	CHASSIS *CHASSIS*	1	-
36	817060512	SCREW *SCREW*	1	-
37	532441178	FENDER *FENDER*	1	-
52	596040501	LOCK NUT *LOCKNUT*	1	-
58	532412280	PLATE *DRAWBAR*	1	-
68	596030701	SCREW *SCREW*	1	-
125	581684801	CLIP *CLIP*	1	-
130	596321701	SCREW *SCREW*	1	-
137	532407590	BUMPER *BUMPER*	1	-
146	581857901	BOLT *BOLT*	1	-
150	532439774	AIR DUCT *AIR DUCT*	1	-
151	532436670	BRACKET *BRACKET*	1	-
152	599961102	SHIELD *SHIELD*	1	-
161	532439781	FUEL *FUEL*	1	-
162	596134101	SCREW *SCREW*	1	-
165	532196826	BRACKET *BRACKET*	1	-
175	590607702	CROSS MEMBER *CROSS MEMBER*	1	-
176	532400776	SCREW *SCREW*	1	-
177	532195228	BUSHING	1	-

Ref.	Article N.	Description	Qty	Kit
		BUSHING		
180	532415063	FRAME *CHASSIS*	1	-
182	532406859	DASH *DASH*	1	-
183	595305701	SCREW *SCREW*	1	-
189	817000512	SCREW *SCREW*	1	-
194	596135701	LOCK NUT *LOCK NUT*	1	-
195	532404137	PLUG *PLUG*	1	-
199	532413485	PLATE *For 96043034100*	1	-
199	596207202	PLATE *For 96043034800*	1	-
202	597867701	SERVICE KIT *SERVICE KIT*	1	-
204	597408001	VENT *VENT*	1	-
205	532439730	TRIM *TRIM*	1	-
206	532439729	TRIM *TRIM*	1	-
213	596030501	SCREW *SCREW*	1	-
214	532199145	CLIP *CLIP*	1	-
217	532409167	ROD *ROD*	1	-
218	532196395	PLATE *PLATE*	1	-
228	593824001	STUD *STUD*	1	-
233	532196539	BOLT *BOLT*	1	-
235	596564201	SPACER *SPACER*	1	-
236	873930500	NUT *NUT*	1	-
259	596434001	SCREW *SCREW*	1	-

Ref.	Article N.	Description	Qty	Kit
282	532414110	CLIP *CLIP*	1	-
283	532439823	CONSOLE *For 96043034100*	1	-
283	596304901	CONSOLE *For 96043034800*	1	-
284	532439861	CONSOLE *For 96043034100*	1	-
284	532439823	CONSOLE *For 96043034800*	1	-
285	532416315	CONSOLE *CONSOLE*	1	-
286	532416317	CONSOLE *CONSOLE*	1	-
287	817600406	SCREW *SCREW*	1	-
306	873900600	NUT *NUT*	1	-
335	532448204	COVER *COVER*	1	-
336	532445309	COVER *COVER*	1	-
350	532445143	CLIP *CLIP*	1	-
375	586908201	BUMPER *BUMPER*	1	-
378	590849801	BUSHING *BUSHING*	1	-
1	581579001	DECAL *DECAL*	1	-
2	531229002	DECAL *DECAL*	1	-
3	546812401	DECAL *DECAL*	1	-
4	581724501	DECAL *DECAL*	1	-
5	599966801	DECAL *DECAL*	1	-
6	546852001	DECAL *For 96043034100*	1	-
6	548111901	DECAL *For 96043034800*	1	-
7	584904602	DECAL	1	-

Ref.	Article N.	Description	Qty	Kit
		DECAL		
8	581724802	DECAL *DECAL*	1	-
9	532439681	PLATE *PAD*	1	-
10	532439682	PAD *PAD*	1	-
1	532426120	TRANSAXLE	1	-
2	532123583	KEY *KEY*	1	-
3	532407287	PULLEY *IDLER*	1	-
15	596565301	WASHER *WASHER*	1	-
17	532413678	BRAKE SPRING *BRAKE SPRING*	1	-
26	532199679	SPRING *SPRING*	1	-
29	532403806	ROD *ROD*	1	-
33	812000001	RETAINER RING *RETAINER RING*	1	-
35	590605902	ROD *ROD*	1	-
37	532188967	WASHER *WASHER*	1	-
42	532008883	PEDAL *PEDAL*	1	-
49	596136201	BOLT *BOLT*	1	-
50	532194327	PULLEY *PULLEY*	1	-
51	873900600	NUT *NUT*	1	-
52	532194326	PULLEY *PULLEY*	1	-
56	592855201	DRIVE BELT *BELT*	1	-
64	532197865	SHAFT *SHAFT*	1	-
69	532423303	HAIR PIN COTTER *HAIR PIN COTTER*	1	-
73	596136501	BOLT	1	-

Ref.	Article N.	Description	Qty	Kit
		BOLT		
92	595305701	SCREW *SCREW*	1	-
99	582404501	ROD *ROD*	1	-
116	596135701	LOCK NUT *LOCK NUT*	1	-
125	817000512	SCREW *SCREW*	1	-
143	596030701	SCREW *SCREW*	1	-
153	532004497	CLIP *CLIP*	1	-
159	596029501	PIN *PIN*	1	-
161	532105709	SPRING *SPRING*	1	-
163	593861001	ROD *ROD*	1	-
166	532429164	NUT *NUT*	1	-
167	532405257	LATCH *LATCH*	1	-
170	532413430	BELT GUIDE *KEEPER*	1	-
177	587225301	PIN *PIN*	1	-
183	532137057	SPACER *SPACER*	1	-
184	587653701	HANDLE *HANDLE*	1	-
185	872110622	BOLT *BOLT*	1	-
186	532194321	SPACER *SPACER*	1	-
187	596135501	WASHER *WASHER*	1	-
188	582217001	LINK *LINK*	1	-
189	532194317	PLATE *PLATE*	1	-
190	532194318	BELT GUIDE *BELT GUIDE*	1	-

Ref.	Article N.	Description	Qty	Kit
196	817000616	SCREW *SCREW*	1	-
197	585658602	BOSS *BOSS*	1	-
205	532121748	WASHER *WASHER*	1	-
206	532448596	BRACKET *BRACKET*	1	-
207	587031402	LATCH *LATCH*	1	-
208	596564101	GEAR *GEAR*	1	-
209	590527802	ROD *ROD*	1	-
210	532400980	PEDAL ARM *PEDAL ARM*	1	-
211	532120183	BEARING *BEARING*	1	-
213	532403119	CONTROL *CONTROL*	1	-
214	532421263	PAD *PAD*	1	-
215	586606502	PEDAL *PEDAL*	1	-
216	532196131	BRACKET *BRACKET*	1	-
221	532403187	SPRING *SPRING*	1	-
222	879212010	WASHER *WASHER*	1	-
223	598662601	BOLT *BOLT*	1	-
225	532403319	BELT GUIDE *BELT GUIDE*	1	-
227	596135901	BOLT *BOLT*	1	-
325	586431203	BRACKET *BRACKET*	1	-
326	586001103	BRACKET *BRACKET*	1	-
334	585882202	BRACKET *BRACKET*	1	-
336	587259602	BOLT	1	-

Ref.	Article N.	Description	Qty	Kit
		BOLT		
1	532163465	BATTERY *BATTERY*	1	-
2	874760412	BOLT *BOLT*	1	-
8	587205101	TRAY *TRAY*	1	-
16	532176138	MICRO SWITCH *MICRO SWITCH*	1	-
21	585436402	HARNESS *HARNESS*	1	-
24	585555601	CABLE *CABLE*	1	-
25	585555501	CABLE *CABLE*	1	-
26	532175158	FUSE *FUSE*	1	-
27	596133601	LOCK NUT *LOCK NUT*	1	-
28	532416588	CABLE *CABLE*	1	-
29	532192749	SWITCH *SWITCH*	1	-
30	532193350	IGNITION MODULE *IGNITION MODULE*	1	-
33	532411935	KEY *KEY*	1	-
34	532110712	SWITCH *SWITCH*	1	-
40	501132901	HARNESS *HARNESS*	1	-
41	817720408	SCREW *SCREW*	1	-
42	532131563	COVER *COVER*	1	-
43	582042802	SOLENOID *SOLENOID*	1	-
46	594919101	HOUR METER *HOUR METER*	1	-
50	582107602	SWITCH *SWITCH*	1	-
55	817060512	SCREW *SCREW*	1	-

Ref.	Article N.	Description	Qty	Kit
71	532194276	CABLE ASSY *CABLE ASSY*	1	-
79	597523001	LIGHT *LIGHT*	1	-
90	532435395	TERMINAL COVER *TERMINAL COVER*	1	-
99	817670412	SCREW *SCREW*	1	-
100	596135301	WASHER *WASHER*	1	-
102	532404454	CABLE *CABLE*	1	-
105	532407568	SWITCH *SWITCH*	1	-
1	900000002	DUMMY PART *ENGINE*	1	-
2	589818702	MUFFLER *MUFFLER*	1	-
9	596501502	KEEPER *KEEPER*	1	-
11	587241601	CLUTCH *CLUTCH*	1	-
12	532405097	PULLEY *PULLEY*	1	-
15	599306004	FUEL TANK ASSY *FUEL TANK*	1	-
18	529989702	CAP *FUEL CAP*	1	-
20	587242504	THROTTLE *THROTTLE*	1	-
21	596321701	SCREW *SCREW*	1	-
28	532401135	LINE *FUEL LINE*	1	-
29	532137180	SPARK ARRESTER *SPARK ARRESTER KIT*	1	-
37	532123487	HOSE CLAMP *HOSE CLAMP*	1	-
41	532126197	WASHER *WASHER*	1	-
42	596238901	WASHER *WASHER*	1	-
45	596133601	LOCK NUT	1	-

Ref.	Article N.	Description	Qty	Kit
		LOCKNUT		
62	532434017	SHIELD *SHIELD*	1	-
69	532165391	GASKET *GASKET*	1	-
70	581881101	TUBE *TUBE.LH*	1	-
71	581881001	TUBE *TUBE. RH*	1	-
79	596134202	SCREW *SCREW*	1	-
81	532148456	TUBE *TUBE*	1	-
82	532428287	PLUG *PLUG*	1	-
84	817060620	SCREW *SCREW*	1	-
85	501606601	BOLT *BOLT*	1	-
90	817000616	SCREW *SCREW*	1	-
91	532187495	BUSHING *BUSHING*	1	-
102	817000512	SCREW *SCREW*	1	-
1	900000002	DUMMY PART *ENGINE MODEL NO. Kawa FR730V-AS40 (546841501)*	1	-
2	589818702	MUFFLER *MUFFLER*	1	-
9	596501502	KEEPER *KEEPER*	1	-
11	587241601	CLUTCH *CLUTCH*	1	-
12	532405097	PULLEY *PULLEY*	1	-
15	599306003	FUEL TANK ASSY *FUEL TANK*	1	-
18	585124801	FUEL CAP ASSY *FUEL CAP ASSY*	1	-
18	529989702	CAP *FUEL CAP ASSY*	1	-
20	532424341	THROTTLE CONTROL *THROTTLE*	1	-

Ref.	Article N.	Description	Qty	Kit
21	532438562	SCREW *SCREW*	1	-
22	532187768	CONTROL *CHOKE*	1	-
28	532401135	LINE *LINE.FUEL.64REAR.EMIS*	1	-
29	532137180	SPARK ARRESTER *SPARK ARRESTER*	1	-
37	532123487	HOSE CLAMP *HOSE CLAMP*	1	-
41	532126197	WASHER *WASHER*	1	-
42	596238901	WASHER *WASHER*	1	-
45	596133601	LOCK NUT *LOCK NUT*	1	-
62	532434017	SHIELD *SHIELD*	1	-
69	532178151	GASKET *GASKET MUFFLER*	1	-
70	583955601	TUBE *TUBE*	1	-
70	583955701	TUBE *TUBE*	1	-
81	532148456	TUBE *TUBE*	1	-
85	501606601	BOLT *BOLT*	1	-
86	532184362	NUT *NUT*	1	-
90	817000616	SCREW *SCREW*	1	-
91	532187495	BUSHING *BUSHING*	1	-
92	817120616	SCREW *SCREW*	1	-
102	817000512	SCREW *SCREW*	1	-
116	539132624	KNOB *KNOB-SHIFT*	1	-
1	532418229	DECK ASSY *DECK*	1	-
1	532418230	DECK	1	-

Ref.	Article N.	Description	Qty	Kit
		DECK		
6	532196066	COVER *COVER*	1	-
7	532197181	COVER *COVER*	1	-
11	532187256	RIDE ON BLADE *BLADE*	1	-
12	532404851	ROD *ROD*	1	-
14	587125401	MANDREL *MANDREL*	1	-
16	596133201	WASHER *WASHER*	1	-
19	532194208	PIN *PIN*	1	-
21	596040501	LOCK NUT *LOCK NUT*	1	-
24	532105304	HUB CAP *HUB CAP*	1	-
25	539107609	SPRING *SPIRNG*	1	-
26	532110452	NUT *NUT*	1	-
27	532187257	DEFLECTOR *DEFLECTOR*	1	-
29	595297001	ROD *ROD*	1	-
32	532173436	PULLEY *PULLEY*	1	-
33	596134801	HEXAGON NUT *HEXAGON NUT*	1	-
34	596322601	NUT *NUT*	1	-
35	584309301	SCREW *SCREW*	1	-
39	532197380	PULLEY *PULLEY*	1	-
41	584953901	BOLT *BOLT*	1	-
43	531169301	SERVICE KIT *SERVICE KIT*	1	-
46	532137729	SCREW *SCREW*	1	-

Ref.	Article N.	Description	Qty	Kit
47	587686701	DRIVE BELT *BELT*	1	-
49	532409149	NUT *NUT*	1	-
50	596136301	BOLT *BOLT*	1	-
52	532196106	PULLEY *PULLEY*	1	-
58	532187342	BAFFLE *BAFFLE*	1	-
59	531168701	SERVICE KIT *SERVICE KIT*	1	-
60	531168801	SERVICE KIT *SERVICE KIT*	1	-
61	585322605	REINFORCEMENT PLATE *REINFORCEMENT PLATE*	1	-
62	585322805	REINFORCEMENT PLATE *REINFORCEMENT PLATE*	1	-
63	596039401	BOLT *BOLT*	1	-
97	532178515	WASHER *WASHER*	1	-
98	532196105	SPRING *SPRING*	1	-
113	596435701	BOLT *BOLT*	1	-
114	532187556	ROD *ROD TENSION RELIEF*	1	-
116	596434404	BOLT *BOLT*	1	-
117	589527301	WHEEL *WHEEL*	1	-
120	596134901	WASHER *WASHER*	1	-
122	532187557	BUSHING *BUSHING*	1	-
184	596135701	LOCK NUT *LOCK NUT*	1	-
185	873900700	NUT *NUT*	1	-
187	593824001	STUD *STUD*	1	-
189	536050602	LINK	1	-

Ref.	Article N.	Description	Qty	Kit
190	532196539	BOLT *BOLT*	1	-
192	532198468	BELT GUIDE *BELT GUIDE*	1	-
194	874490736	BOLT *BOLT*	1	-
196	596337801	BOLT *BOLT*	1	-
241	532137729	SCREW	1	-
242	532415598	HOSE COUPLING *HOSE COUPLING*	1	-
243	532416405	COUPLING *COUPLING*	1	-
1	900000002	DUMMY PART	1	-
1	536178101	SEAT *SEAT*	1	-
2	597329902	BRACKET *BRACKET*	1	-
3	590777602	BRACKET *BRACKET*	1	-
6	521996502	NUT *NUT*	1	-
8	532171877	BOLT *BOLT*	1	-
9	597785101	BUMPER *BUMPER*	1	-
10	597298202	BRACKET *BRACKET*	1	-
19	597783101	KNOB *KNOB*	1	-
21	596240701	BOLT *BOLT*	1	-
29	536960901	RETAINER *RETAINER*	1	-
30	597781801	BOLT *BOLT*	1	-
37	594944401	NUT *NUT*	1	-
43	597869301	BOLT *BOLT*	1	-
48	536990401	ARM REST KIT *ARM REST KIT*	1	-
1	597866101	SERVICE KIT	1	-

Ref.	Article N.	Description	Qty	Kit
		SERVICE KIT		
2	532195968	SHAFT *SHAFT*	1	-
4	536652702	SPINDLE *SPINDLE*	1	-
5	538691201	SPINDLE *SPINDLE*	1	-
6	532006266	WASHER *WASHER*	1	-
7	532121748	WASHER *WASHER*	1	-
8	812000029	RETAINER RING *RETAINER RING*	1	-
9	532121232	HUB CAP *HUB CAP*	1	-
13	532121749	WASHER *WASHER*	1	-
14	596238701	WASHER *WASHER*	1	-
15	873540600	NUT *NUT*	1	-
16	587016002	SHAFT *SHAFT*	1	-
19	532194729	PLATE *PLATE*	1	-
21	586840201	ADAPTER *ADAPTER*	1	-
22	585029802	BEARING *BEARING*	1	-
26	594949101	CAP *CAP*	1	-
27	596933401	WASHER *WASHER*	1	-
28	817000612	SCREW *SCREW*	1	-
35	532194732	PLATE *PLATE*	1	-
45	587016401	WASHER *WASHER*	1	-
50	873900600	NUT *NUT*	1	-
53	532188967	WASHER *WASHER*	1	-

Ref.	Article N.	Description	Qty	Kit
57	532197246	BRACKET *BRACKET*	1	-
58	532194747	BOLT *BOLT*	1	-
59	532194748	WASHER *WASHER*	1	-
60	873971000	NUT *NUT*	1	-
61	597070202	LINKAGE *LINKAGE*	1	-
62	597070302	LINKAGE *LINKAGE*	1	-
63	817000512	SCREW *SCREW*	1	-
64	532199849	SPRING RETAINER *SPRING RETAINER*	1	-
66	871020748	BOLT *BOLT*	1	-
67	529496302	BUSHING *BUSHING*	1	-
68	873900700	NUT *NUT*	1	-
69	532199162	WASHER *WASHER*	1	-
70	585338801	BRACKET *BRACKET*	1	-
75	580683701	PINION *PINION*	1	-
76	580683601	SCREW *SCREW*	1	-
122	532444962	CAP *CAP*	1	-
1	532059192	CAP *CAP*	1	-
2	532065139	NIPPLE *NIPPLE*	1	-
3	532138336	WHEEL RIM *RIM*	1	-
4	532059904	HOSE *HOSE*	1	-
5	532106222	TIRE *TIRE*	1	-
6	532000278	NIPPLE	1	-

Ref.	Article N.	Description	Qty	Kit
		NIPPLE		
7	532009040	BEARING *BEARING*	1	-
8	532175039	HUB CAP *HUB CAP*	1	-
9	532122082	TIRE *TIRE*	1	-
10	532007152	TUBE *TUBE*	1	-
11	532138337	RIM SPROCKET *RIM SPROCKET*	1	-
12	576707201	SEALANT *SEALANT*	1	-
2	532422027	SHAFT *SHAFT*	1	-
3	594018002	LEVER	1	-
7	580962301	GRIP *GRIP*	1	-
10	532196314	SPRING *SPRING*	1	-
87	532194209	SPRING *SPRING*	1	-
88	532410710	SPRING *SPRING*	1	-
89	819191912	WASHER *WASHER*	1	-
90	532194208	PIN *PIN*	1	-
91	589464805	LINK ASSY *LINK ASSY*	1	-
97	817000612	SCREW *SCREW*	1	-
98	581506902	LINK ASSY *LINK ASSY*	1	-
116	594976501	WASHER *WASHER*	1	-

WHEELS AND TIRES

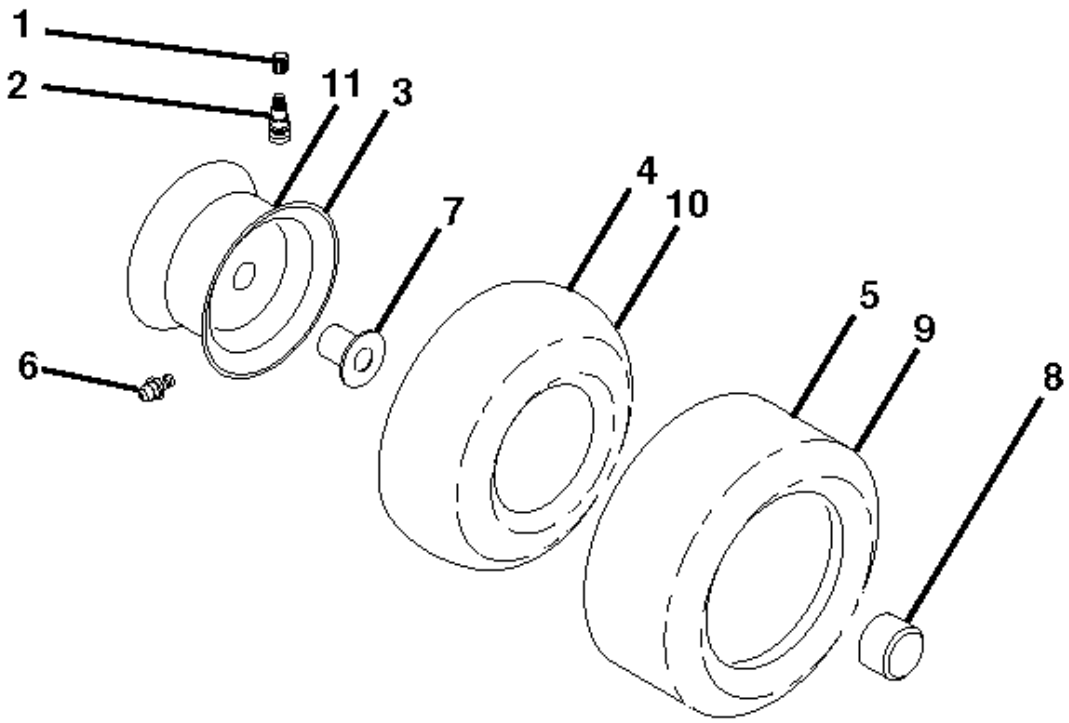

Ref.	Article N.	Description	Qty	Kit
3	597688201	COVER *COVER*	1	-
5	590748811	DASHBOARD *For 96043034100*	1	-
5	590748821	DASHBOARD *For 96043034800*	1	-
14	532441177	HOOD *HOOD*	1	-
15	597867901	SERVICE KIT *SERVICE KIT*	1	-
18	597407102	GRILLE *GRILLE*	1	-

Ref.	Article N.	Description	Qty	Kit
34	580910801	CHASSIS *CHASSIS*	1	-
36	817060512	SCREW *SCREW*	1	-
37	532441178	FENDER *FENDER*	1	-
52	596040501	LOCK NUT *LOCKNUT*	1	-
58	532412280	PLATE *DRAWBAR*	1	-
68	596030701	SCREW *SCREW*	1	-
125	581684801	CLIP *CLIP*	1	-
130	596321701	SCREW *SCREW*	1	-
137	532407590	BUMPER *BUMPER*	1	-
146	581857901	BOLT *BOLT*	1	-
150	532439774	AIR DUCT *AIR DUCT*	1	-
151	532436670	BRACKET *BRACKET*	1	-
152	599961102	SHIELD *SHIELD*	1	-
161	532439781	FUEL *FUEL*	1	-
162	596134101	SCREW *SCREW*	1	-
165	532196826	BRACKET *BRACKET*	1	-
175	590607702	CROSS MEMBER *CROSS MEMBER*	1	-
176	532400776	SCREW *SCREW*	1	-
177	532195228	BUSHING *BUSHING*	1	-
180	532415063	FRAME *CHASSIS*	1	-
182	532406859	DASH *DASH*	1	-
183	595305701	SCREW	1	-

Ref.	Article N.	Description	Qty	Kit
		SCREW		
189	817000512	SCREW *SCREW*	1	-
194	596135701	LOCK NUT *LOCK NUT*	1	-
195	532404137	PLUG *PLUG*	1	-
199	532413485	PLATE *For 96043034100*	1	-
199	596207202	PLATE *For 96043034800*	1	-
202	597867701	SERVICE KIT *SERVICE KIT*	1	-
204	597408001	VENT *VENT*	1	-
205	532439730	TRIM *TRIM*	1	-
206	532439729	TRIM *TRIM*	1	-
213	596030501	SCREW *SCREW*	1	-
214	532199145	CLIP *CLIP*	1	-
217	532409167	ROD *ROD*	1	-
218	532196395	PLATE *PLATE*	1	-
228	593824001	STUD *STUD*	1	-
233	532196539	BOLT *BOLT*	1	-
235	596564201	SPACER *SPACER*	1	-
236	873930500	NUT *NUT*	1	-
259	596434001	SCREW *SCREW*	1	-
282	532414110	CLIP *CLIP*	1	-
283	532439823	CONSOLE *For 96043034100*	1	-
283	596304901	CONSOLE *For 96043034800*	1	-

Ref.	Article N.	Description	Qty	Kit
284	532439861	CONSOLE *For 96043034100*	1	-
284	532439823	CONSOLE *For 96043034800*	1	-
285	532416315	CONSOLE *CONSOLE*	1	-
286	532416317	CONSOLE *CONSOLE*	1	-
287	817600406	SCREW *SCREW*	1	-
306	873900600	NUT *NUT*	1	-
335	532448204	COVER *COVER*	1	-
336	532445309	COVER *COVER*	1	-
350	532445143	CLIP *CLIP*	1	-
375	586908201	BUMPER *BUMPER*	1	-
378	590849801	BUSHING *BUSHING*	1	-
1	581579001	DECAL *DECAL*	1	-
2	531229002	DECAL *DECAL*	1	-
3	546812401	DECAL *DECAL*	1	-
4	581724501	DECAL *DECAL*	1	-
5	599966801	DECAL *DECAL*	1	-
6	546852001	DECAL *For 96043034100*	1	-
6	548111901	DECAL *For 96043034800*	1	-
7	584904602	DECAL *DECAL*	1	-
8	581724802	DECAL *DECAL*	1	-
9	532439681	PLATE *PAD*	1	-
10	532439682	PAD	1	-

Ref.	Article N.	Description	Qty	Kit
		PAD		
1	532426120	TRANSAXLE	1	-
2	532123583	KEY *KEY*	1	-
3	532407287	PULLEY *IDLER*	1	-
15	596565301	WASHER *WASHER*	1	-
17	532413678	BRAKE SPRING *BRAKE SPRING*	1	-
26	532199679	SPRING *SPRING*	1	-
29	532403806	ROD *ROD*	1	-
33	812000001	RETAINER RING *RETAINER RING*	1	-
35	590605902	ROD *ROD*	1	-
37	532188967	WASHER *WASHER*	1	-
42	532008883	PEDAL *PEDAL*	1	-
49	596136201	BOLT *BOLT*	1	-
50	532194327	PULLEY *PULLEY*	1	-
51	873900600	NUT *NUT*	1	-
52	532194326	PULLEY *PULLEY*	1	-
56	592855201	DRIVE BELT *BELT*	1	-
64	532197865	SHAFT *SHAFT*	1	-
69	532423303	HAIR PIN COTTER *HAIR PIN COTTER*	1	-
73	596136501	BOLT *BOLT*	1	-
92	595305701	SCREW *SCREW*	1	-
99	582404501	ROD *ROD*	1	-
116	596135701	LOCK NUT	1	-

Ref.	Article N.	Description	Qty	Kit
		LOCK NUT		
125	817000512	SCREW *SCREW*	1	-
143	596030701	SCREW *SCREW*	1	-
153	532004497	CLIP *CLIP*	1	-
159	596029501	PIN *PIN*	1	-
161	532105709	SPRING *SPRING*	1	-
163	593861001	ROD *ROD*	1	-
166	532429164	NUT *NUT*	1	-
167	532405257	LATCH *LATCH*	1	-
170	532413430	BELT GUIDE *KEEPER*	1	-
177	587225301	PIN *PIN*	1	-
183	532137057	SPACER *SPACER*	1	-
184	587653701	HANDLE *HANDLE*	1	-
185	872110622	BOLT *BOLT*	1	-
186	532194321	SPACER *SPACER*	1	-
187	596135501	WASHER *WASHER*	1	-
188	582217001	LINK *LINK*	1	-
189	532194317	PLATE *PLATE*	1	-
190	532194318	BELT GUIDE *BELT GUIDE*	1	-
196	817000616	SCREW *SCREW*	1	-
197	585658602	BOSS *BOSS*	1	-
205	532121748	WASHER *WASHER*	1	-

Ref.	Article N.	Description	Qty	Kit
206	532448596	BRACKET *BRACKET*	1	-
207	587031402	LATCH *LATCH*	1	-
208	596564101	GEAR *GEAR*	1	-
209	590527802	ROD *ROD*	1	-
210	532400980	PEDAL ARM *PEDAL ARM*	1	-
211	532120183	BEARING *BEARING*	1	-
213	532403119	CONTROL *CONTROL*	1	-
214	532421263	PAD *PAD*	1	-
215	586606502	PEDAL *PEDAL*	1	-
216	532196131	BRACKET *BRACKET*	1	-
221	532403187	SPRING *SPRING*	1	-
222	879212010	WASHER *WASHER*	1	-
223	598662601	BOLT *BOLT*	1	-
225	532403319	BELT GUIDE *BELT GUIDE*	1	-
227	596135901	BOLT *BOLT*	1	-
325	586431203	BRACKET *BRACKET*	1	-
326	586001103	BRACKET *BRACKET*	1	-
334	585882202	BRACKET *BRACKET*	1	-
336	587259602	BOLT *BOLT*	1	-
1	532163465	BATTERY *BATTERY*	1	-
2	874760412	BOLT *BOLT*	1	-
8	587205101	TRAY	1	-

Ref.	Article N.	Description	Qty	Kit
		TRAY		
16	532176138	MICRO SWITCH *MICRO SWITCH*	1	-
21	585436402	HARNESS *HARNESS*	1	-
24	585555601	CABLE *CABLE*	1	-
25	585555501	CABLE *CABLE*	1	-
26	532175158	FUSE *FUSE*	1	-
27	596133601	LOCK NUT *LOCK NUT*	1	-
28	532416588	CABLE *CABLE*	1	-
29	532192749	SWITCH *SWITCH*	1	-
30	532193350	IGNITION MODULE *IGNITION MODULE*	1	-
33	532411935	KEY *KEY*	1	-
34	532110712	SWITCH *SWITCH*	1	-
40	501132901	HARNESS *HARNESS*	1	-
41	817720408	SCREW *SCREW*	1	-
42	532131563	COVER *COVER*	1	-
43	582042802	SOLENOID *SOLENOID*	1	-
46	594919101	HOUR METER *HOUR METER*	1	-
50	582107602	SWITCH *SWITCH*	1	-
55	817060512	SCREW *SCREW*	1	-
71	532194276	CABLE ASSY *CABLE ASSY*	1	-
79	597523001	LIGHT *LIGHT*	1	-
90	532435395	TERMINAL COVER *TERMINAL COVER*	1	-

Ref.	Article N.	Description	Qty	Kit
99	817670412	SCREW *SCREW*	1	-
100	596135301	WASHER *WASHER*	1	-
102	532404454	CABLE *CABLE*	1	-
105	532407568	SWITCH *SWITCH*	1	-
1	900000002	DUMMY PART *ENGINE*	1	-
2	589818702	MUFFLER *MUFFLER*	1	-
9	596501502	KEEPER *KEEPER*	1	-
11	587241601	CLUTCH *CLUTCH*	1	-
12	532405097	PULLEY *PULLEY*	1	-
15	599306004	FUEL TANK ASSY *FUEL TANK*	1	-
18	529989702	CAP *FUEL CAP*	1	-
20	587242504	THROTTLE *THROTTLE*	1	-
21	596321701	SCREW *SCREW*	1	-
28	532401135	LINE *FUEL LINE*	1	-
29	532137180	SPARK ARRESTER *SPARK ARRESTER KIT*	1	-
37	532123487	HOSE CLAMP *HOSE CLAMP*	1	-
41	532126197	WASHER *WASHER*	1	-
42	596238901	WASHER *WASHER*	1	-
45	596133601	LOCK NUT *LOCKNUT*	1	-
62	532434017	SHIELD *SHIELD*	1	-
69	532165391	GASKET *GASKET*	1	-
70	581881101	TUBE	1	-

Ref.	Article N.	Description	Qty	Kit
		TUBE.LH		
71	581881001	TUBE *TUBE. RH*	1	-
79	596134202	SCREW *SCREW*	1	-
81	532148456	TUBE *TUBE*	1	-
82	532428287	PLUG *PLUG*	1	-
84	817060620	SCREW *SCREW*	1	-
85	501606601	BOLT *BOLT*	1	-
90	817000616	SCREW *SCREW*	1	-
91	532187495	BUSHING *BUSHING*	1	-
102	817000512	SCREW *SCREW*	1	-
1	900000002	DUMMY PART *ENGINE MODEL NO. Kawa FR730V-AS40 (546841501)*	1	-
2	589818702	MUFFLER *MUFFLER*	1	-
9	596501502	KEEPER *KEEPER*	1	-
11	587241601	CLUTCH *CLUTCH*	1	-
12	532405097	PULLEY *PULLEY*	1	-
15	599306003	FUEL TANK ASSY *FUEL TANK*	1	-
18	585124801	FUEL CAP ASSY *FUEL CAP ASSY*	1	-
18	529989702	CAP *FUEL CAP ASSY*	1	-
20	532424341	THROTTLE CONTROL *THROTTLE*	1	-
21	532438562	SCREW *SCREW*	1	-
22	532187768	CONTROL *CHOKE*	1	-
28	532401135	LINE *LINE.FUEL.64REAR.EMIS*	1	-

Ref.	Article N.	Description	Qty	Kit
29	532137180	SPARK ARRESTER *SPARK ARRESTER*	1	-
37	532123487	HOSE CLAMP *HOSE CLAMP*	1	-
41	532126197	WASHER *WASHER*	1	-
42	596238901	WASHER *WASHER*	1	-
45	596133601	LOCK NUT *LOCK NUT*	1	-
62	532434017	SHIELD *SHIELD*	1	-
69	532178151	GASKET *GASKET MUFFLER*	1	-
70	583955601	TUBE *TUBE*	1	-
70	583955701	TUBE *TUBE*	1	-
81	532148456	TUBE *TUBE*	1	-
85	501606601	BOLT *BOLT*	1	-
86	532184362	NUT *NUT*	1	-
90	817000616	SCREW *SCREW*	1	-
91	532187495	BUSHING *BUSHING*	1	-
92	817120616	SCREW *SCREW*	1	-
102	817000512	SCREW *SCREW*	1	-
116	539132624	KNOB *KNOB-SHIFT*	1	-
1	532418229	DECK ASSY *DECK*	1	-
1	532418230	DECK *DECK*	1	-
6	532196066	COVER *COVER*	1	-
7	532197181	COVER *COVER*	1	-
11	532187256	RIDE ON BLADE	1	-

Ref.	Article N.	Description	Qty	Kit
		BLADE		
12	532404851	ROD *ROD*	1	-
14	587125401	MANDREL *MANDREL*	1	-
16	596133201	WASHER *WASHER*	1	-
19	532194208	PIN *PIN*	1	-
21	596040501	LOCK NUT *LOCK NUT*	1	-
24	532105304	HUB CAP *HUB CAP*	1	-
25	539107609	SPRING *SPIRNG*	1	-
26	532110452	NUT *NUT*	1	-
27	532187257	DEFLECTOR *DEFLECTOR*	1	-
29	595297001	ROD *ROD*	1	-
32	532173436	PULLEY *PULLEY*	1	-
33	596134801	HEXAGON NUT *HEXAGON NUT*	1	-
34	596322601	NUT *NUT*	1	-
35	584309301	SCREW *SCREW*	1	-
39	532197380	PULLEY *PULLEY*	1	-
41	584953901	BOLT *BOLT*	1	-
43	531169301	SERVICE KIT *SERVICE KIT*	1	-
46	532137729	SCREW *SCREW*	1	-
47	587686701	DRIVE BELT *BELT*	1	-
49	532409149	NUT *NUT*	1	-
50	596136301	BOLT *BOLT*	1	-

Ref.	Article N.	Description	Qty	Kit
52	532196106	PULLEY *PULLEY*	1	-
58	532187342	BAFFLE *BAFFLE*	1	-
59	531168701	SERVICE KIT *SERVICE KIT*	1	-
60	531168801	SERVICE KIT *SERVICE KIT*	1	-
61	585322605	REINFORCEMENT PLATE *REINFORCEMENT PLATE*	1	-
62	585322805	REINFORCEMENT PLATE *REINFORCEMENT PLATE*	1	-
63	596039401	BOLT *BOLT*	1	-
97	532178515	WASHER *WASHER*	1	-
98	532196105	SPRING *SPRING*	1	-
113	596435701	BOLT *BOLT*	1	-
114	532187556	ROD *ROD TENSION RELIEF*	1	-
116	596434404	BOLT *BOLT*	1	-
117	589527301	WHEEL *WHEEL*	1	-
120	596134901	WASHER *WASHER*	1	-
122	532187557	BUSHING *BUSHING*	1	-
184	596135701	LOCK NUT *LOCK NUT*	1	-
185	873900700	NUT *NUT*	1	-
187	593824001	STUD *STUD*	1	-
189	536050602	LINK	1	-
190	532196539	BOLT *BOLT*	1	-
192	532198468	BELT GUIDE *BELT GUIDE*	1	-
194	874490736	BOLT *BOLT*	1	-

Ref.	Article N.	Description	Qty	Kit
196	596337801	BOLT *BOLT*	1	-
241	532137729	SCREW	1	-
242	532415598	HOSE COUPLING *HOSE COUPLING*	1	-
243	532416405	COUPLING *COUPLING*	1	-
1	900000002	DUMMY PART	1	-
1	536178101	SEAT *SEAT*	1	-
2	597329902	BRACKET *BRACKET*	1	-
3	590777602	BRACKET *BRACKET*	1	-
6	521996502	NUT *NUT*	1	-
8	532171877	BOLT *BOLT*	1	-
9	597785101	BUMPER *BUMPER*	1	-
10	597298202	BRACKET *BRACKET*	1	-
19	597783101	KNOB *KNOB*	1	-
21	596240701	BOLT *BOLT*	1	-
29	536960901	RETAINER *RETAINER*	1	-
30	597781801	BOLT *BOLT*	1	-
37	594944401	NUT *NUT*	1	-
43	597869301	BOLT *BOLT*	1	-
48	536990401	ARM REST KIT *ARM REST KIT*	1	-
1	597866101	SERVICE KIT *SERVICE KIT*	1	-
2	532195968	SHAFT *SHAFT*	1	-
4	536652702	SPINDLE *SPINDLE*	1	-
5	538691201	SPINDLE	1	-

Ref.	Article N.	Description	Qty	Kit
		SPINDLE		
6	532006266	WASHER *WASHER*	1	-
7	532121748	WASHER *WASHER*	1	-
8	812000029	RETAINER RING *RETAINER RING*	1	-
9	532121232	HUB CAP *HUB CAP*	1	-
13	532121749	WASHER *WASHER*	1	-
14	596238701	WASHER *WASHER*	1	-
15	873540600	NUT *NUT*	1	-
16	587016002	SHAFT *SHAFT*	1	-
19	532194729	PLATE *PLATE*	1	-
21	586840201	ADAPTER *ADAPTER*	1	-
22	585029802	BEARING *BEARING*	1	-
26	594949101	CAP *CAP*	1	-
27	596933401	WASHER *WASHER*	1	-
28	817000612	SCREW *SCREW*	1	-
35	532194732	PLATE *PLATE*	1	-
45	587016401	WASHER *WASHER*	1	-
50	873900600	NUT *NUT*	1	-
53	532188967	WASHER *WASHER*	1	-
57	532197246	BRACKET *BRACKET*	1	-
58	532194747	BOLT *BOLT*	1	-
59	532194748	WASHER *WASHER*	1	-

Ref.	Article N.	Description	Qty	Kit
60	873971000	NUT *NUT*	1	-
61	597070202	LINKAGE *LINKAGE*	1	-
62	597070302	LINKAGE *LINKAGE*	1	-
63	817000512	SCREW *SCREW*	1	-
64	532199849	SPRING RETAINER *SPRING RETAINER*	1	-
66	871020748	BOLT *BOLT*	1	-
67	529496302	BUSHING *BUSHING*	1	-
68	873900700	NUT *NUT*	1	-
69	532199162	WASHER *WASHER*	1	-
70	585338801	BRACKET *BRACKET*	1	-
75	580683701	PINION *PINION*	1	-
76	580683601	SCREW *SCREW*	1	-
122	532444962	CAP *CAP*	1	-
1	532059192	CAP *CAP*	1	-
2	532065139	NIPPLE *NIPPLE*	1	-
3	532138336	WHEEL RIM *RIM*	1	-
4	532059904	HOSE *HOSE*	1	-
5	532106222	TIRE *TIRE*	1	-
6	532000278	NIPPLE *NIPPLE*	1	-
7	532009040	BEARING *BEARING*	1	-
8	532175039	HUB CAP *HUB CAP*	1	-
9	532122082	TIRE	1	-

Ref.	Article N.	Description	Qty	Kit
		TIRE		
10	532007152	TUBE *TUBE*	1	-
11	532138337	RIM SPROCKET *RIM SPROCKET*	1	-
12	576707201	SEALANT *SEALANT*	1	-
2	532422027	SHAFT *SHAFT*	1	-
3	594018002	LEVER	1	-
7	580962301	GRIP *GRIP*	1	-
10	532196314	SPRING *SPRING*	1	-
87	532194209	SPRING *SPRING*	1	-
88	532410710	SPRING *SPRING*	1	-
89	819191912	WASHER *WASHER*	1	-
90	532194208	PIN *PIN*	1	-
91	589464805	LINK ASSY *LINK ASSY*	1	-
97	817000612	SCREW *SCREW*	1	-
98	581506902	LINK ASSY *LINK ASSY*	1	-
116	594976501	WASHER *WASHER*	1	-

MOWER LIFT / DECK LIFT

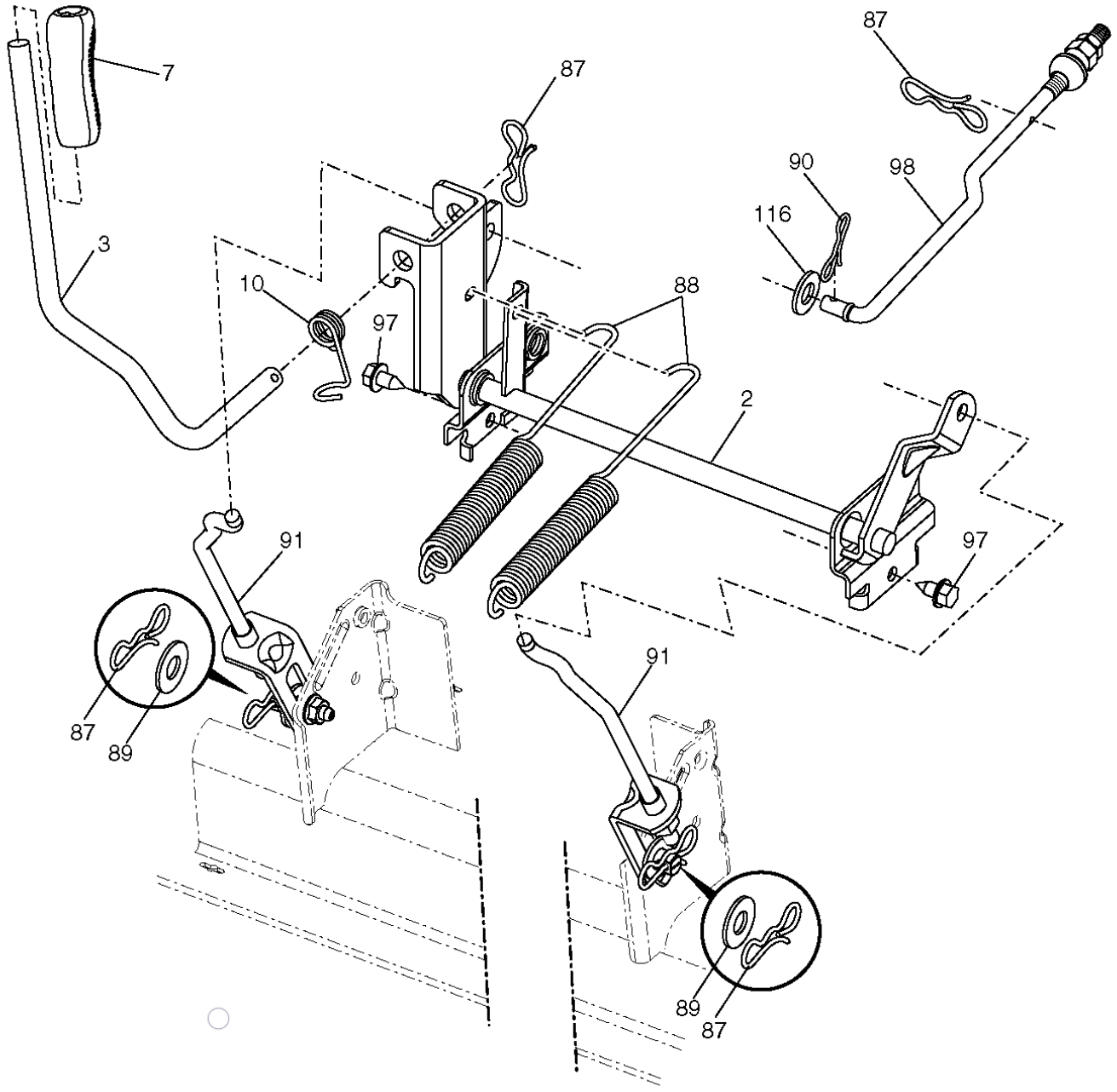

Ref.	Article N.	Description	Qty	Kit
3	597688201	COVER *COVER*	1	-
5	590748811	DASHBOARD *For 96043034100*	1	-
5	590748821	DASHBOARD *For 96043034800*	1	-
14	532441177	HOOD *HOOD*	1	-
15	597867901	SERVICE KIT *SERVICE KIT*	1	-

Ref.	Article N.	Description	Qty	Kit
18	597407102	GRILLE *GRILLE*	1	-
34	580910801	CHASSIS *CHASSIS*	1	-
36	817060512	SCREW *SCREW*	1	-
37	532441178	FENDER *FENDER*	1	-
52	596040501	LOCK NUT *LOCKNUT*	1	-
58	532412280	PLATE *DRAWBAR*	1	-
68	596030701	SCREW *SCREW*	1	-
125	581684801	CLIP *CLIP*	1	-
130	596321701	SCREW *SCREW*	1	-
137	532407590	BUMPER *BUMPER*	1	-
146	581857901	BOLT *BOLT*	1	-
150	532439774	AIR DUCT *AIR DUCT*	1	-
151	532436670	BRACKET *BRACKET*	1	-
152	599961102	SHIELD *SHIELD*	1	-
161	532439781	FUEL *FUEL*	1	-
162	596134101	SCREW *SCREW*	1	-
165	532196826	BRACKET *BRACKET*	1	-
175	590607702	CROSS MEMBER *CROSS MEMBER*	1	-
176	532400776	SCREW *SCREW*	1	-
177	532195228	BUSHING *BUSHING*	1	-
180	532415063	FRAME *CHASSIS*	1	-
182	532406859	DASH	1	-

Ref.	Article N.	Description	Qty	Kit
		DASH		
183	595305701	SCREW *SCREW*	1	-
189	817000512	SCREW *SCREW*	1	-
194	596135701	LOCK NUT *LOCK NUT*	1	-
195	532404137	PLUG *PLUG*	1	-
199	532413485	PLATE *For 96043034100*	1	-
199	596207202	PLATE *For 96043034800*	1	-
202	597867701	SERVICE KIT *SERVICE KIT*	1	-
204	597408001	VENT *VENT*	1	-
205	532439730	TRIM *TRIM*	1	-
206	532439729	TRIM *TRIM*	1	-
213	596030501	SCREW *SCREW*	1	-
214	532199145	CLIP *CLIP*	1	-
217	532409167	ROD *ROD*	1	-
218	532196395	PLATE *PLATE*	1	-
228	593824001	STUD *STUD*	1	-
233	532196539	BOLT *BOLT*	1	-
235	596564201	SPACER *SPACER*	1	-
236	873930500	NUT *NUT*	1	-
259	596434001	SCREW *SCREW*	1	-
282	532414110	CLIP *CLIP*	1	-
283	532439823	CONSOLE *For 96043034100*	1	-

Ref.	Article N.	Description	Qty	Kit
283	596304901	CONSOLE *For 96043034800*	1	-
284	532439861	CONSOLE *For 96043034100*	1	-
284	532439823	CONSOLE *For 96043034800*	1	-
285	532416315	CONSOLE *CONSOLE*	1	-
286	532416317	CONSOLE *CONSOLE*	1	-
287	817600406	SCREW *SCREW*	1	-
306	873900600	NUT *NUT*	1	-
335	532448204	COVER *COVER*	1	-
336	532445309	COVER *COVER*	1	-
350	532445143	CLIP *CLIP*	1	-
375	586908201	BUMPER *BUMPER*	1	-
378	590849801	BUSHING *BUSHING*	1	-
1	581579001	DECAL *DECAL*	1	-
2	531229002	DECAL *DECAL*	1	-
3	546812401	DECAL *DECAL*	1	-
4	581724501	DECAL *DECAL*	1	-
5	599966801	DECAL *DECAL*	1	-
6	546852001	DECAL *For 96043034100*	1	-
6	548111901	DECAL *For 96043034800*	1	-
7	584904602	DECAL *DECAL*	1	-
8	581724802	DECAL *DECAL*	1	-
9	532439681	PLATE	1	-

Ref.	Article N.	Description	Qty	Kit
		PAD		
10	532439682	PAD *PAD*	1	-
1	532426120	TRANSAXLE	1	-
2	532123583	KEY *KEY*	1	-
3	532407287	PULLEY *IDLER*	1	-
15	596565301	WASHER *WASHER*	1	-
17	532413678	BRAKE SPRING *BRAKE SPRING*	1	-
26	532199679	SPRING *SPRING*	1	-
29	532403806	ROD *ROD*	1	-
33	812000001	RETAINER RING *RETAINER RING*	1	-
35	590605902	ROD *ROD*	1	-
37	532188967	WASHER *WASHER*	1	-
42	532008883	PEDAL *PEDAL*	1	-
49	596136201	BOLT *BOLT*	1	-
50	532194327	PULLEY *PULLEY*	1	-
51	873900600	NUT *NUT*	1	-
52	532194326	PULLEY *PULLEY*	1	-
56	592855201	DRIVE BELT *BELT*	1	-
64	532197865	SHAFT *SHAFT*	1	-
69	532423303	HAIR PIN COTTER *HAIR PIN COTTER*	1	-
73	596136501	BOLT *BOLT*	1	-
92	595305701	SCREW *SCREW*	1	-
99	582404501	ROD	1	-

Ref.	Article N.	Description	Qty	Kit
		ROD		
116	596135701	LOCK NUT *LOCK NUT*	1	-
125	817000512	SCREW *SCREW*	1	-
143	596030701	SCREW *SCREW*	1	-
153	532004497	CLIP *CLIP*	1	-
159	596029501	PIN *PIN*	1	-
161	532105709	SPRING *SPRING*	1	-
163	593861001	ROD *ROD*	1	-
166	532429164	NUT *NUT*	1	-
167	532405257	LATCH *LATCH*	1	-
170	532413430	BELT GUIDE *KEEPER*	1	-
177	587225301	PIN *PIN*	1	-
183	532137057	SPACER *SPACER*	1	-
184	587653701	HANDLE *HANDLE*	1	-
185	872110622	BOLT *BOLT*	1	-
186	532194321	SPACER *SPACER*	1	-
187	596135501	WASHER *WASHER*	1	-
188	582217001	LINK *LINK*	1	-
189	532194317	PLATE *PLATE*	1	-
190	532194318	BELT GUIDE *BELT GUIDE*	1	-
196	817000616	SCREW *SCREW*	1	-
197	585658602	BOSS *BOSS*	1	-

Ref.	Article N.	Description	Qty	Kit
205	532121748	WASHER *WASHER*	1	-
206	532448596	BRACKET *BRACKET*	1	-
207	587031402	LATCH *LATCH*	1	-
208	596564101	GEAR *GEAR*	1	-
209	590527802	ROD *ROD*	1	-
210	532400980	PEDAL ARM *PEDAL ARM*	1	-
211	532120183	BEARING *BEARING*	1	-
213	532403119	CONTROL *CONTROL*	1	-
214	532421263	PAD *PAD*	1	-
215	586606502	PEDAL *PEDAL*	1	-
216	532196131	BRACKET *BRACKET*	1	-
221	532403187	SPRING *SPRING*	1	-
222	879212010	WASHER *WASHER*	1	-
223	598662601	BOLT *BOLT*	1	-
225	532403319	BELT GUIDE *BELT GUIDE*	1	-
227	596135901	BOLT *BOLT*	1	-
325	586431203	BRACKET *BRACKET*	1	-
326	586001103	BRACKET *BRACKET*	1	-
334	585882202	BRACKET *BRACKET*	1	-
336	587259602	BOLT *BOLT*	1	-
1	532163465	BATTERY *BATTERY*	1	-
2	874760412	BOLT	1	-

Ref.	Article N.	Description	Qty	Kit
		BOLT		
8	587205101	TRAY *TRAY*	1	-
16	532176138	MICRO SWITCH *MICRO SWITCH*	1	-
21	585436402	HARNESS *HARNESS*	1	-
24	585555601	CABLE *CABLE*	1	-
25	585555501	CABLE *CABLE*	1	-
26	532175158	FUSE *FUSE*	1	-
27	596133601	LOCK NUT *LOCK NUT*	1	-
28	532416588	CABLE *CABLE*	1	-
29	532192749	SWITCH *SWITCH*	1	-
30	532193350	IGNITION MODULE *IGNITION MODULE*	1	-
33	532411935	KEY *KEY*	1	-
34	532110712	SWITCH *SWITCH*	1	-
40	501132901	HARNESS *HARNESS*	1	-
41	817720408	SCREW *SCREW*	1	-
42	532131563	COVER *COVER*	1	-
43	582042802	SOLENOID *SOLENOID*	1	-
46	594919101	HOUR METER *HOUR METER*	1	-
50	582107602	SWITCH *SWITCH*	1	-
55	817060512	SCREW *SCREW*	1	-
71	532194276	CABLE ASSY *CABLE ASSY*	1	-
79	597523001	LIGHT *LIGHT*	1	-

Ref.	Article N.	Description	Qty	Kit
90	532435395	TERMINAL COVER *TERMINAL COVER*	1	-
99	817670412	SCREW *SCREW*	1	-
100	596135301	WASHER *WASHER*	1	-
102	532404454	CABLE *CABLE*	1	-
105	532407568	SWITCH *SWITCH*	1	-
1	900000002	DUMMY PART *ENGINE*	1	-
2	589818702	MUFFLER *MUFFLER*	1	-
9	596501502	KEEPER *KEEPER*	1	-
11	587241601	CLUTCH *CLUTCH*	1	-
12	532405097	PULLEY *PULLEY*	1	-
15	599306004	FUEL TANK ASSY *FUEL TANK*	1	-
18	529989702	CAP *FUEL CAP*	1	-
20	587242504	THROTTLE *THROTTLE*	1	-
21	596321701	SCREW *SCREW*	1	-
28	532401135	LINE *FUEL LINE*	1	-
29	532137180	SPARK ARRESTER *SPARK ARRESTER KIT*	1	-
37	532123487	HOSE CLAMP *HOSE CLAMP*	1	-
41	532126197	WASHER *WASHER*	1	-
42	596238901	WASHER *WASHER*	1	-
45	596133601	LOCK NUT *LOCKNUT*	1	-
62	532434017	SHIELD *SHIELD*	1	-
69	532165391	GASKET	1	-

Ref.	Article N.	Description	Qty	Kit
		GASKET		
70	581881101	TUBE *TUBE.LH*	1	-
71	581881001	TUBE *TUBE. RH*	1	-
79	596134202	SCREW *SCREW*	1	-
81	532148456	TUBE *TUBE*	1	-
82	532428287	PLUG *PLUG*	1	-
84	817060620	SCREW *SCREW*	1	-
85	501606601	BOLT *BOLT*	1	-
90	817000616	SCREW *SCREW*	1	-
91	532187495	BUSHING *BUSHING*	1	-
102	817000512	SCREW *SCREW*	1	-
1	900000002	DUMMY PART *ENGINE MODEL NO. Kawa FR730V-AS40 (546841501)*	1	-
2	589818702	MUFFLER *MUFFLER*	1	-
9	596501502	KEEPER *KEEPER*	1	-
11	587241601	CLUTCH *CLUTCH*	1	-
12	532405097	PULLEY *PULLEY*	1	-
15	599306003	FUEL TANK ASSY *FUEL TANK*	1	-
18	585124801	FUEL CAP ASSY *FUEL CAP ASSY*	1	-
18	529989702	CAP *FUEL CAP ASSY*	1	-
20	532424341	THROTTLE CONTROL *THROTTLE*	1	-
21	532438562	SCREW *SCREW*	1	-
22	532187768	CONTROL *CHOKE*	1	-

Ref.	Article N.	Description	Qty	Kit
28	532401135	LINE *LINE.FUEL.64REAR.EMIS*	1	-
29	532137180	SPARK ARRESTER *SPARK ARRESTER*	1	-
37	532123487	HOSE CLAMP *HOSE CLAMP*	1	-
41	532126197	WASHER *WASHER*	1	-
42	596238901	WASHER *WASHER*	1	-
45	596133601	LOCK NUT *LOCK NUT*	1	-
62	532434017	SHIELD *SHIELD*	1	-
69	532178151	GASKET *GASKET MUFFLER*	1	-
70	583955601	TUBE *TUBE*	1	-
70	583955701	TUBE *TUBE*	1	-
81	532148456	TUBE *TUBE*	1	-
85	501606601	BOLT *BOLT*	1	-
86	532184362	NUT *NUT*	1	-
90	817000616	SCREW *SCREW*	1	-
91	532187495	BUSHING *BUSHING*	1	-
92	817120616	SCREW *SCREW*	1	-
102	817000512	SCREW *SCREW*	1	-
116	539132624	KNOB *KNOB-SHIFT*	1	-
1	532418229	DECK ASSY *DECK*	1	-
1	532418230	DECK *DECK*	1	-
6	532196066	COVER *COVER*	1	-
7	532197181	COVER	1	-

Ref.	Article N.	Description	Qty	Kit
		COVER		
11	532187256	RIDE ON BLADE *BLADE*	1	-
12	532404851	ROD *ROD*	1	-
14	587125401	MANDREL *MANDREL*	1	-
16	596133201	WASHER *WASHER*	1	-
19	532194208	PIN *PIN*	1	-
21	596040501	LOCK NUT *LOCK NUT*	1	-
24	532105304	HUB CAP *HUB CAP*	1	-
25	539107609	SPRING *SPIRNG*	1	-
26	532110452	NUT *NUT*	1	-
27	532187257	DEFLECTOR *DEFLECTOR*	1	-
29	595297001	ROD *ROD*	1	-
32	532173436	PULLEY *PULLEY*	1	-
33	596134801	HEXAGON NUT *HEXAGON NUT*	1	-
34	596322601	NUT *NUT*	1	-
35	584309301	SCREW *SCREW*	1	-
39	532197380	PULLEY *PULLEY*	1	-
41	584953901	BOLT *BOLT*	1	-
43	531169301	SERVICE KIT *SERVICE KIT*	1	-
46	532137729	SCREW *SCREW*	1	-
47	587686701	DRIVE BELT *BELT*	1	-
49	532409149	NUT *NUT*	1	-

Ref.	Article N.	Description	Qty	Kit
50	596136301	BOLT *BOLT*	1	-
52	532196106	PULLEY *PULLEY*	1	-
58	532187342	BAFFLE *BAFFLE*	1	-
59	531168701	SERVICE KIT *SERVICE KIT*	1	-
60	531168801	SERVICE KIT *SERVICE KIT*	1	-
61	585322605	REINFORCEMENT PLATE *REINFORCEMENT PLATE*	1	-
62	585322805	REINFORCEMENT PLATE *REINFORCEMENT PLATE*	1	-
63	596039401	BOLT *BOLT*	1	-
97	532178515	WASHER *WASHER*	1	-
98	532196105	SPRING *SPRING*	1	-
113	596435701	BOLT *BOLT*	1	-
114	532187556	ROD *ROD TENSION RELIEF*	1	-
116	596434404	BOLT *BOLT*	1	-
117	589527301	WHEEL *WHEEL*	1	-
120	596134901	WASHER *WASHER*	1	-
122	532187557	BUSHING *BUSHING*	1	-
184	596135701	LOCK NUT *LOCK NUT*	1	-
185	873900700	NUT *NUT*	1	-
187	593824001	STUD *STUD*	1	-
189	536050602	LINK	1	-
190	532196539	BOLT *BOLT*	1	-
192	532198468	BELT GUIDE *BELT GUIDE*	1	-

Ref.	Article N.	Description	Qty	Kit
194	874490736	BOLT *BOLT*	1	-
196	596337801	BOLT *BOLT*	1	-
241	532137729	SCREW	1	-
242	532415598	HOSE COUPLING *HOSE COUPLING*	1	-
243	532416405	COUPLING *COUPLING*	1	-
1	900000002	DUMMY PART	1	-
1	536178101	SEAT *SEAT*	1	-
2	597329902	BRACKET *BRACKET*	1	-
3	590777602	BRACKET *BRACKET*	1	-
6	521996502	NUT *NUT*	1	-
8	532171877	BOLT *BOLT*	1	-
9	597785101	BUMPER *BUMPER*	1	-
10	597298202	BRACKET *BRACKET*	1	-
19	597783101	KNOB *KNOB*	1	-
21	596240701	BOLT *BOLT*	1	-
29	536960901	RETAINER *RETAINER*	1	-
30	597781801	BOLT *BOLT*	1	-
37	594944401	NUT *NUT*	1	-
43	597869301	BOLT *BOLT*	1	-
48	536990401	ARM REST KIT *ARM REST KIT*	1	-
1	597866101	SERVICE KIT *SERVICE KIT*	1	-
2	532195968	SHAFT *SHAFT*	1	-
4	536652702	SPINDLE	1	-

Ref.	Article N.	Description	Qty	Kit
		SPINDLE		
5	538691201	SPINDLE *SPINDLE*	1	-
6	532006266	WASHER *WASHER*	1	-
7	532121748	WASHER *WASHER*	1	-
8	812000029	RETAINER RING *RETAINER RING*	1	-
9	532121232	HUB CAP *HUB CAP*	1	-
13	532121749	WASHER *WASHER*	1	-
14	596238701	WASHER *WASHER*	1	-
15	873540600	NUT *NUT*	1	-
16	587016002	SHAFT *SHAFT*	1	-
19	532194729	PLATE *PLATE*	1	-
21	586840201	ADAPTER *ADAPTER*	1	-
22	585029802	BEARING *BEARING*	1	-
26	594949101	CAP *CAP*	1	-
27	596933401	WASHER *WASHER*	1	-
28	817000612	SCREW *SCREW*	1	-
35	532194732	PLATE *PLATE*	1	-
45	587016401	WASHER *WASHER*	1	-
50	873900600	NUT *NUT*	1	-
53	532188967	WASHER *WASHER*	1	-
57	532197246	BRACKET *BRACKET*	1	-
58	532194747	BOLT *BOLT*	1	-

Ref.	Article N.	Description	Qty	Kit
59	532194748	WASHER *WASHER*	1	-
60	873971000	NUT *NUT*	1	-
61	597070202	LINKAGE *LINKAGE*	1	-
62	597070302	LINKAGE *LINKAGE*	1	-
63	817000512	SCREW *SCREW*	1	-
64	532199849	SPRING RETAINER *SPRING RETAINER*	1	-
66	871020748	BOLT *BOLT*	1	-
67	529496302	BUSHING *BUSHING*	1	-
68	873900700	NUT *NUT*	1	-
69	532199162	WASHER *WASHER*	1	-
70	585338801	BRACKET *BRACKET*	1	-
75	580683701	PINION *PINION*	1	-
76	580683601	SCREW *SCREW*	1	-
122	532444962	CAP *CAP*	1	-
1	532059192	CAP *CAP*	1	-
2	532065139	NIPPLE *NIPPLE*	1	-
3	532138336	WHEEL RIM *RIM*	1	-
4	532059904	HOSE *HOSE*	1	-
5	532106222	TIRE *TIRE*	1	-
6	532000278	NIPPLE *NIPPLE*	1	-
7	532009040	BEARING *BEARING*	1	-
8	532175039	HUB CAP	1	-

Ref.	Article N.	Description	Qty	Kit
		HUB CAP		
9	532122082	TIRE *TIRE*	1	-
10	532007152	TUBE *TUBE*	1	-
11	532138337	RIM SPROCKET *RIM SPROCKET*	1	-
12	576707201	SEALANT *SEALANT*	1	-
2	532422027	SHAFT *SHAFT*	1	-
3	594018002	LEVER	1	-
7	580962301	GRIP *GRIP*	1	-
10	532196314	SPRING *SPRING*	1	-
87	532194209	SPRING *SPRING*	1	-
88	532410710	SPRING *SPRING*	1	-
89	819191912	WASHER *WASHER*	1	-
90	532194208	PIN *PIN*	1	-
91	589464805	LINK ASSY *LINK ASSY*	1	-
97	817000612	SCREW *SCREW*	1	-
98	581506902	LINK ASSY *LINK ASSY*	1	-
116	594976501	WASHER *WASHER*	1	-