Product Catalog: Husqvarna/Z554X

CONSOLE

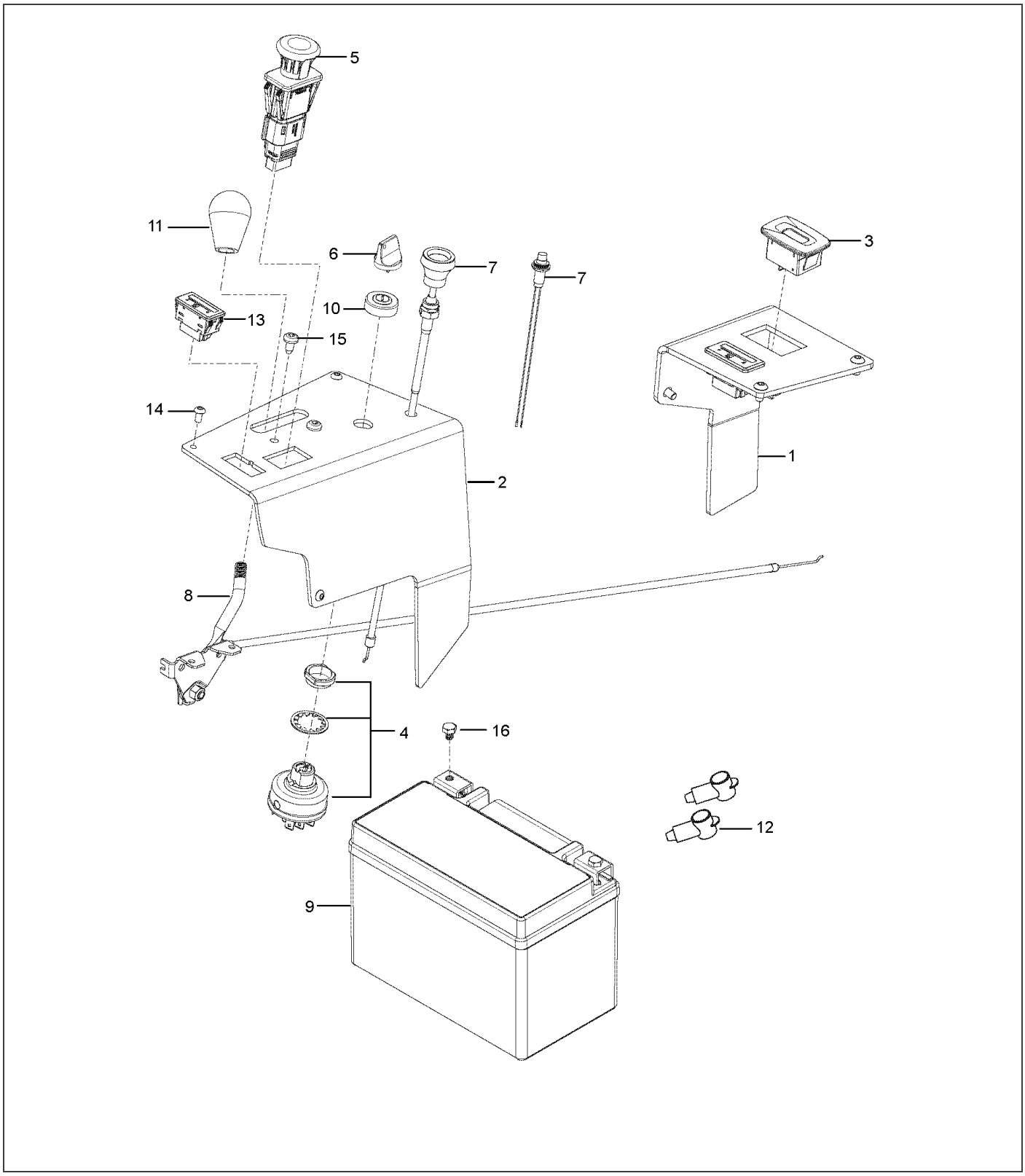

Ref.	Article N.	Description	Qty	Kit
1	582483902	PANEL	1	-
2	582483602	PANEL	1	-
3	586161801	HOUR METER	1	-
4	574455401	SWITCH	1	-
5	589887201	SWITCH	1	-
6	574455501	KEY	1	-
7	581878301	LIGHT *For 967930101-00, 967678701-00*	1	-
7	574206901	CABLE *CHOKE/ For 96767860300, 96767860200, 96767860101*	1	-
8	582120301	THROTTLE CONTROL *46*	1	-
9	589819501	BATTERY *MX-9/ For 967930101-00, 967678701-00, 967678601-00*	1	-
9	589819502	BATTERY *MX-12/ For 967930101-00, 967678701-00, 967678601-00*	1	-
9	589819503	BATTERY *MX-14/ For 96767860300, 96767860200, 96767860101*	1	-
9	582460606	BRACKET *MX-14*	1	-
9	596990201	SERVICE KIT *MX-12 Bracket (Battery not included) For 967930101-00, 967678701-00, 967678601-00*	1	-
10	539103178	NUT CAP	1	-
11	539132624	KNOB	1	-
12	539102759	INSULATOR	2	-
13	592872701	FUEL GAUGE	2	-
14	539114341	SCREW	6	-
15	532199855	SCREW	2	-
16	582460801	SCREW	2	-
21	593777801	HARNESS *FOR CARB ENGINES*	1	-
21	593777803	HARNESS *FOR KOHLER & YAMAHA EFI*	1	-
22	589838501	HARNESS	1	-
23	574514001	TIMER *NOT SHOWN*	1	-
24	590632101	CABLE *NOT SHOWN*	1	-
25	539101714	SOLENOID *NOT SHOWN (SOLENOID KAW FX)*	1	-

Ref.	Article N.	Description	Qty	Kit
1	574437301	DECAL *BELT ROUTING*	1	-
2	590209401	DECAL *MOTION/BRAKE RIGHT*	1	-
3	590209501	DECAL *MOTION_BRAKE_LEFT*	1	-
3	590807601	DECAL *Z554X*	1	-
4	581724301	DECAL *NO STEP*	2	-
5	539105745	DECAL *BATTERY WARNING*	1	-
6	539105744	DECAL *DANGER BELT*	2	-
7	581724401	DECAL *DEFLECTOR WARNING*	1	-
8	532424102	DECAL *SPARK ARRESTOR*	1	-
9	574455001	DECAL *CROWN LARGE*	1	-
10	574569006	DECAL *ROPS/ For 96767860300, 96767860200,*	1	-
10	593011101	DECAL *ROPS/ For 967930101-00, 967678701-00, 967678601-00*	1	-
11	574569002	DECAL *ROPS WARNING*	1	-
12	574569401	DECAL *FUSE*	1	-
13	584904601	DECAL *DECK/DEFLECT WARNING*	1	-
14	532428676	DECAL *CROWN SMALL*	1	-
15	590799301	DECAL *DECK HEIGHT*	1	-
16	590210001	DECAL *COMMERCIAL*	1	-
17	590846801	DECAL *MAINTANCE/SERVICE*	1	-
18	590210301	DECAL *CONTROL PANEL RIGHT - CHOKE /For 96767860300, 96767860200, 96767860101*	1	-
18	590210302	DECAL	1	-

Ref.	Article N.	Description	Qty	Kit
		CONTROL PANEL RIGHT-EFI/ For 967930101-00, 967678701-00, 967678601-00		
19	590210501	DECAL *CONTROL PANEL LEFT*	1	-
20	590209701	DECAL *TRANSMISSION WARNING*	1	-
21	590209202	DECAL *START W/ CHOKE*	1	-
22	577469001	DECAL *EMBLEM*	2	-
30	577150101	DECAL *FUEL - NOT SHOWN*	1	-
31	590807801	DECAL *Z560X / For 967678601-00, 967678701-00*	1	-
32	590807901	DECAL *Z572X / For 967678601-00, 967678701-00*	1	-
1	582733302	PLATE -	1	-
2	525749501	CLUTCH -	1	-
3	522676702	STOP -	1	-
4	539118911	NIPPLE -	1	-
5	522837001	PLUG -	1	-
6	510019801	PULLEY -	1	-
7	539119680	ADAPTER -	1	-
8	539105072	90DEG.ELBOW 3/8NPT -	1	-
9	525749901	KEY -	1	-
10	587886001	MUFFLER -	1	-
11	539109618	O-RING -	1	-
12	505280001	TIE WRAP -	1	-
13	581332801	BOLT -	1	-
14	574233801	SCREW	4	-

Ref.	Article N.	Description	Qty	Kit
		-		
15	539990563	SCREW -	4	-
16	874780716	BOLT -	1	-
17	539990208	SCREW -	2	-
18	539102933	SCREW -	2	-
19	539108120	NUT -	1	-
20	539112899	NUT, 5/16-18, NYLOC -	8	-
21	539102582	NUT -	1	-
22	539102593	WASHER -	4	-
23	539990247	WASHER -	1	-
24	539125626	WASHER -	1	-
25	586839701	GASKET *NOT SHOWN*	2	-
1	582483105	FUEL TANK ASSY *For 96767860300, 96767860200, 96767860101, 967678701-00, 967678601-00*	1	-
1	590680505	TANK UNIT ASSY *For 967930101-00*	1	-
2	582481705	FUEL TANK ASSY *For 96767860300, 96767860200, 96767860101, 967678701-00, 967678601-00*	1	-
2	590680405	TANK UNIT ASSY *For 967930101-00*	1	-
3	587044550	HOSE -	1	-
4	587044526	HOSE -	1	-
5	587044517	HOSE -	1	-
6	587044846	HOSE -	1	-
7	587044808	HOSE *For 967930101-00*	1	-
7	587044833	HOSE *For 96767860300, 96767860200, 96767860101, 967678701-00, 967678601-00*	1	-

Ref.	Article N.	Description	Qty	Kit
8	587044824	HOSE -	1	-
9	574206602	FITTING -	1	-
10	575018101	CAP -	2	-
11	582483301	GUARD -	1	-
12	590638801	SENSOR -	2	-
13	576618101	TANK VENT -	2	-
14	539102679	VALVE -	1	-
15	582482301	GUARD -	1	-
15	525865402	TUBE ASSY -	1	-
16	532003645	BUSHING -	2	-
17	590209101	GROMMET -	2	-
18	584648201	GROMMET -	2	-
19	582481502	BRACKET -	2	-
20	582481602	BRACKET -	2	-
20	525865403	TUBE ASSY -	1	-
21	582483401	COVER -	1	-
22	539912222	CLAMP -	6	-
23	575436501	CLAMP -	6	-
24	582482601	CLIP -	8	-
25	505280001	TIE WRAP -	5	-
26	874490548	BOLT -	6	-
27	582482401	COVER	1	-

Ref.	Article N.	Description	Qty	Kit
		-		
27	590257301	SCREW -	6	-
28	817490516	SCREW -	6	-
29	582484201	SCREW -	8	-
30	539112899	NUT, 5/16-18, NYLOC -	20	-
31	532126684	SHIM -	6	-
1	591359901	SHIELD -	1	-
2	582461206	BRACKET -	1	-
3	539102587	ABSORBER -	4	-
4	582461701	HOLDER ASSY -	3	-
5	582461303	ROD -	2	-
6	874780412	BOLT -	3	-
7	874490548	BOLT -	4	-
8	503200001	SCREW EHHFM -	3	-
9	587592101	SCREW -	4	-
10	521991101	NUT -	2	-
11	539112899	NUT, 5/16-18, NYLOC -	8	-
12	532191730	NUT -	3	-
13	731231405	HEXAGON NUT -	3	-
14	873350800	NUT -	2	-
1	582463102	ARM -	1	-
2	501603701	BEARING -	2	-

Ref.	Article N.	Description	Qty	Kit
3	582479102	BRACKET -	4	-
4	582480101	CLAMP -	4	-
5	529311401	FITTING -	2	-
6	582479404	FRAME -	1	-
7	582480204	HOSE -	2	-
8	586933802	MOUNT -	1	-
9	582468101	SHAFT -	1	-
10	587654101	PULLEY -	2	-
11	582716201	ROD END -	1	-
12	582468401	SPRING -	1	-
13	574499201	TANK -	2	-
14	582480001	TRANSMISSION -	1	-
15	582480002	TRANSMISSION -	1	-
16	576127201	FILTER -	1	-
17	582480402	V-BELT -	1	-
18	874490652	SCREW -	1	-
19	574210601	SCREW -	8	-
20	525828901	BOLT *For 96767860300, 96767860200, 96767860101*	8	-
20	874490848	SCREW *For 967930101-00, 967678701-00, 967678601-00*	8	-
21	539100145	BOLT -	2	-
22	539990645	BOLT -	2	-
23	532165857	SCREW	4	-

Ref.	Article N.	Description	Qty	Kit
		-		
24	539913847	BOLT -	1	-
25	521991101	NUT -	8	-
26	521996501	NUT -	6	-
27	819133210	WASHER -	1	-
1	591359704	CUTTING DECK -	1	-
2	588264805	DRIVE BELT -	1	-
3	575265901	BLADE -	3	-
4	582462702	ARM -	1	-
5	521979701	PULLEY -	3	-
6	510015101	PULLEY -	3	-
7	582463003	PULLEY -	1	-
8	582463006	PULLEY -	1	-
9	582468801	CHUTE -	1	-
10	510254501	SHIELD -	3	-
11	574169601	ROLLER -	4	-
12	574196401	TUBE -	2	-
13	574196501	TUBE -	1	-
14	539131518	BEARING -	2	-
15	510263701	BEARING -	2	-
16	582467302	BRACKET -	1	-
17	582463203	BRACKET *For 96767860300, 96767860200, 96767860101, 967678701-00, 967678601-00*	1	-

Ref.	Article N.	Description	Qty	Kit
17	582463207	BRACKET *For 967930101-00*	1	-
18	582463204	BRACKET *For 96767860300, 96767860200, 96767860101, 967678701-00, 967678601-00*	1	-
18	582463208	BRACKET *For 967930101-00*	1	-
19	582472502	BELT GUARD *For 96767860300, 96767860200, 96767860101, 967678701-00, 967678601-00*	1	-
19	594913302	BELT GUIDE *For 967930101-00*	1	-
20	582470201	KEEPER -	1	-
21	539104411	KNOB -	2	-
22	590523702	PLATE -	1	-
23	582466401	PLATE -	1	-
24	582468101	SHAFT -	1	-
25	582468301	SPACER -	1	-
26	589455201	SPACER -	1	-
27	582468001	SPRING -	1	-
28	510437502	BAFFLE -	1	-
29	539104763	CLIP -	2	-
30	539115620	1/4-20X3/4 CARR BLT -	4	-
31	872140610	BOLT -	3	-
32	510022301	SCREW -	2	-
33	872140628	BOLT -	2	-
34	872140864	BOLT -	1	-
35	874490644	BOLT -	2	-
36	574210601	SCREW	18	-

Ref.	Article N.	Description	Qty	Kit
		-		
37	525612801	SCREW -	2	-
38	521996601	SCREW -	1	-
39	582476401	SCREW -	4	-
40	539130315	BOLT -	9	-
41	539119007	SCREW -	3	-
42	574202001	BOLT -	1	-
43	539913847	BOLT -	1	-
44	521996501	NUT -	10	-
45	539112899	NUT, 5/16-18, NYLOC -	4	-
46	521991101	NUT -	3	-
47	539109332	NUT -	1	-
48	539976978	NUT -	4	-
49	539106504	WASHER -	2	-
50	539109600	WASHER -	9	-
1	582462602	SHAFT -	1	-
2	592654001	ARM -	1	-
2	592654002	ARM -	1	-
3	582465402	ARM -	2	-
4	582463902	ARM -	2	-
5	582462001	ARM -	1	-
6	582462002	ARM -	1	-

Ref.	Article N.	Description	Qty	Kit
7	582464601	ROD -	2	-
8	582472801	ROD -	1	-
9	582471401	ROD -	1	-
10	510408301	PEDAL -	1	-
11	510089501	PAD -	1	-
12	510023902	BLOCK -	4	-
13	582467201	BLOCK -	1	-
14	582466902	BRACKET -	1	-
15	582468902	BRACKET -	2	-
16	589454103	LEVER -	1	-
17	592654101	LEVER -	1	-
18	539109693	LIFT CHAIN - 3 LINK -	2	-
18	589454104	LEVER -	1	-
19	539102641	CHAIN -	2	-
20	582464801	PIVOT -	2	-
21	582763902	PLATE -	1	-
22	589453201	LEVER ASSY -	1	-
23	582469001	SHACKLE -	2	-
24	582464201	SHAFT -	2	-
25	593091801	SPRING -	2	-
26	582471301	SPRING -	1	-
27	582467001	SWIVEL	1	-

Ref.	Article N.	Description	Qty	Kit
		-		
28	582467101	SWIVEL -	1	-
29	582469901	BUSHING -	2	-
30	582469801	BUSHING -	2	-
31	510089201	BUSHING -	5	-
32	539912730	RING -	1	-
33	539990870	RING -	2	-
34	590465501	PIN -	1	-
35	539102889	SPLIT PIN -	2	-
36	582466701	SCREW -	4	-
37	582472601	SCREW -	2	-
38	574202001	BOLT -	2	-
39	539990580	SCREW -	1	-
40	589786001	SCREW -	4	-
41	501064102	SCREW -	3	-
42	501064101	SCREW -	4	-
43	510408201	BOLT -	1	-
44	539101175	SCREW -	4	-
45	582465601	SCREW -	2	-
46	589677701	NUT -	3	-
47	539976978	NUT -	1	-
48	539990546	NUT -	2	-

Ref.	Article N.	Description	Qty	Kit
49	539119124	NUT -	4	-
50	539110340	NUT -	3	-
51	521996501	NUT -	6	-
52	539112899	NUT, 5/16-18, NYLOC -	2	-
53	539132019	NUT -	4	-
54	582466601	NUT -	4	-
55	539108732	NUT 3/8-24 HEX JAM ZD -	2	-
56	539991043	BUSHING -	2	-
1	579866104	SEAT ASSY -	1	-
1	582460103	SEAT *Fits 97058500100*	1	-
2	582478801	BAR -	1	-
3	582478201	BRACKET -	2	-
4	590555002	BRACKET -	1	-
5	590481801	ISOLATOR -	8	-
6	539116377	INSERT -	4	-
7	590373501	LATCH -	1	-
8	590506802	PLATE -	1	-
9	590507201	ROD -	1	-
10	539113952	SPRING -	2	-
11	582478101	NUT -	4	-
12	532192749	SWITCH -	1	-
13	539108392	HCS 5/16-18 X 5/8 GR 5 ZD	4	-

Ref.	Article N.	Description	Qty	Kit
		-		
14	582478901	SCREW -	2	-
15	582478501	SCREW -	2	-
16	539990316	BOLT -	8	-
17	582478601	NUT -	2	-
18	539913847	BOLT -	1	-
19	539112899	NUT, 5/16-18, NYLOC -	6	-
20	522023401	WASHER -	2	-
21	532413524	WASHER -	8	-
22	539990118	WASHER -	2	-
23	539990187	WASHER -	4	-
24	579866109	SEAT ASSY *Knob*	1	-
25	579866108	SEAT ASSY *REPLACEMENT PAD ONLY*	2	-
1	580942201	HUB -	3	-
2	580942101	SHAFT -	3	-
3	580942701	V-RING -	6	-
4	580942601	SEAL -	6	-
5	583911101	BEARING KIT *ALSO ORDER TOOL KIT*	3	-
6	580942301	SPACER -	3	-
7	580942501	CARRIER -	3	-
8	539976998	NIPPLE -	3	-
9	539977326	FITTING -	3	-

Ref.	Article N.	Description	Qty	Kit
10	539130653	NUT -	3	-
11	580943306	SPINDLE -	3	-
12	580942801	SHIM *For 967678601-00, 967678701-00*	1	-
13	574754201	KIT *NOT SHOWN*	1	-
1	582475501	LEVER *LEFT*	1	-
2	582475502	LEVER *RIGHT*	1	-
3	596925601	ROD *RIGHT SIDE ASSY*	1	-
3	596925701	ROD *LEFT SIDE ASSY*	1	-
3	598852501	SERVICE KIT *COUPLER KIT. CONTAINS (2) COUPLERS THAT FITS BOTH LH/RH SIDES. REF # 4 SCREWS INTO THIS COUPLER*	1	-
4	588692502	ROD *ROD.END.MALE.LH THREAD*	2	-
5	579764601	JOINT *JOINT.RH.THREAD.FEMALE.5/16*	2	-
6	539923515	SPACER	2	-
7	597744702	BRACKET	2	-
8	592653801	CARRIER *w/BEARINGS LEFT*	1	-
8	592653802	CARRIER *w/BEARINGS RIGHT*	1	-
9	592653901	CARRIER	2	-
12	582477802	BRACKET *LEFT*	1	-
12	582477804	BRACKET *RIGHT*	1	-
13	582476902	BRACKET	2	-
14	582475102	BRACKET	4	-
15	587225301	PIN	2	-
16	582551901	CLIP	2	-
17	588775401	DAMPER	2	-
18	582477401	PIN	2	-
19	589505102	PIVOT	2	-
20	589489601	RETAINER	2	-

Ref.	Article N.	Description	Qty	Kit
21	589500902	SWITCH	2	-
22	582475001	SPACER	2	-
23	582711303	SPACER	2	-
24	582477001	SPRING	4	-
25	532151332	SPRING	2	-
26	582477702	SPRING	2	-
27	597744501	ADAPTER	2	-
28	582477501	CABLE	2	-
29	539110607	STUD	4	-
30	582477602	BRACKET	2	-
31	582476801	BEARING	4	-
32	539131518	BEARING	8	-
33	532170165	BOLT	4	-
34	525544001	BOLT	4	-
35	525465402	SCREW	2	-
36	539976934	SCREW	4	-
37	582477102	SCREW	4	-
38	582476401	SCREW	4	-
39	596240801	BOLT	2	-
40	595901501	BOLT	4	-
41	577117701	SCREW	2	-
42	589505602	SCREW	2	-
44	594944401	NUT	14	-
45	596040901	HEXAGON NUT	4	-
46	521996502	NUT	6	-
47	539990184	NUT	4	-
48	596134901	WASHER	2	-
49	539990187	WASHER	4	-
50	596204101	WASHER	2	-
51	522023401	WASHER	4	-
1	582475501	LEVER -	1	-
2	582475502	LEVER -	1	-
3	501567001	ROD *For 967930101-00*	1	-
3	592653701	CONTROL *LEFT For 96767860300, 96767860200, 96767860101, 967678701. 967678601*	1	-

Ref.	Article N.	Description	Qty	Kit
3	592653702	CONTROL *RIGHT*	1	-
4	588692502	ROD -	2	-
5	579764601	JOINT -	2	-
6	582484001	BELLOWS *For 967930101-00*	1	-
6	591193301	SERVICE KIT *For 96767860300, 96767860200, 96767860101, 967678701-00, 967678601-00*	1	-
7	582484101	BELLOWS *For 967930101-00*	1	-
7	591193302	SERVICE KIT *For 96767860300, 96767860200, 96767860101, 967678701-00, 967678601-00*	1	-
8	592653801	CARRIER *w/BEARINGS LEFT/ For 96767860300, 96767860200, 96767860101, 967678701-00, 967678601-00*	1	-
8	592653802	CARRIER *w/BEARINGS LEFT/ For 967930101-00*	1	-
9	592653901	CARRIER -	2	-
10	592724002	CONTROL -	1	-
10	592724001	CONTROL -	1	-
11	592653501	PARKING BRAKE -	1	-
12	582477802	BRACKET *LEFT*	1	-
12	582477804	BRACKET *RIGHT*	1	-
13	582476901	BRACKET -	2	-
14	582475102	BRACKET -	4	-
15	587225301	PIN -	2	-
16	582551901	CLIP -	2	-
17	588775401	DAMPER -	2	-
18	582477401	PIN -	2	-

Ref.	Article N.	Description	Qty	Kit
19	589505101	PIVOT -	2	-
20	589489601	RETAINER -	2	-
21	589500901	SWITCH -	2	-
22	582475001	SPACER -	2	-
23	582711303	SPACER -	2	-
24	582477001	SPRING -	4	-
25	532151332	SPRING -	2	-
26	582477701	SPRING -	2	-
27	582477201	YOKE -	2	-
28	582477501	CABLE -	2	-
29	539110607	STUD -	4	-
30	582477601	BRACKET -	2	-
31	582476801	BEARING -	4	-
32	539131518	BEARING -	8	-
33	539110303	BOLT -	4	-
34	525544001	BOLT -	4	-
35	525465401	SCREW -	2	-
36	539976934	SCREW -	4	-
37	582477101	SCREW -	4	-
38	582476401	SCREW -	2	-
39	539115574	EYE BOLT -	2	-
40	539990208	SCREW	4	-

Ref.	Article N.	Description	Qty	Kit
		-		
41	577117701	SCREW -	6	-
42	589505601	SCREW -	2	-
43	582482901	RIVET -	12	-
44	539112899	NUT, 5/16-18, NYLOC -	14	-
45	539990223	NUT -	4	-
46	521996501	NUT -	6	-
47	539990184	NUT -	4	-
48	539990692	WASHER -	2	-
49	539990187	WASHER -	4	-
50	819111116	WASHER -	2	-
51	522023401	WASHER -	2	-
1	599893003	COVER -	1	-
2	599893004	COVER -	1	-
3	596564002	BOLT -	4	-
1	599156701	TIRE *fits 967669801-00, 967699802-00*	2	-
1	510154601	TIRE *Use From SN: 060117F000001 To SN: 090820F999999*	2	-
2	539105152	TIRE *24x12-12 Tire Only*	2	-
2	510154502	WHEEL RIM *Rim Only*	2	-
2	510154501	TIRE *Tire & Rim Assembly*	2	-
3	525611902	FORK -	2	-
4	510034001	CAP -	2	-

Ref.	Article N.	Description	Qty	Kit
5	510034301	SEAL -	2	-
6	510034403	BEARING -	4	-
7	596623501	VALVE -	2	-
8	590690701	SPACER *Use From SN: 060117F000001 To SN: 090820F999999*	4	-
9	590704902	SPACER *Use From SN: 060117F000001 To SN: 090820F999999*	2	-
10	594946501	BOLT -	2	-
11	522842602	NUT -	2	-
12	587653902	NUT -	8	-
13	873930800	NUT *For 967678802-01, 967678801-01*	2	-
13	521991102	NUT *For 96793040300, 967669703-01*	2	-
14	595086801	WASHER -	2	-
15	574824701	WASHER -	2	-
16	539102484	BEARING *Use after SN: 090920F000001*	4	-
17	539105307	ROLLER BEARING *Use after SN: 090920F000001*	4	-
18	539912234	VALVE *Use after SN: 090920F000001*	2	-
19	599405101	SHIM *Use after SN: 090920F000001*	2	-
20	539133007	WASHER *Use after SN: 090920F000001*	2	-
21	539105522	TIRE *13X6.5-6 Tire Only Use After SN: 090920F000001*	2	-
21	581199501	WHEEL ASSY *Use after SN: 090920F000001*	2	-
22	575334901	SPACER *Use after SN: 090920F000001*	2	-
23	596623501	VALVE -	2	-
24	597383801	SERVICE KIT	2	-

Ref.	Article N.	Description	Qty	Kit
		Use From SN: 060117F000001 To SN: 090820F999999		
1	597383801	SERVICE KIT -	1	-
1	510154601	TIRE -	2	-
2	522905101	TIRE -	2	-
3	525611902	FORK -	2	-
4	510034001	CAP -	2	-
4	522905102	TIRE -	2	-
5	510034301	SEAL -	2	-
6	510034403	BEARING -	4	-
7	539101474	NIPPLE -	2	-
8	590690701	SPACER -	4	-
9	590704901	SPACER -	2	-
10	539105517	BOLT -	2	-
11	522842601	NUT -	2	-
12	587653902	NUT -	8	-
13	873930800	NUT -	2	-
14	539990250	WASHER -	2	-
15	574824701	WASHER -	2	-
1	591359801	FRAME *w/ SAFETY DECALS*	1	-
2	522675702	BUMPER -	1	-
3	587898002	GUARD -	1	-
4	589808802	BRACKET -	2	-

Ref.	Article N.	Description	Qty	Kit
5	589807202	BRACKET -	1	-
6	589448202	BRACKET -	1	-
7	589448204	BRACKET -	1	-
8	582481101	BRACKET -	2	-
9	582481002	PANEL *For 96767860300, 96767860200, 96767860101, 967678701-00, 967678601-00*	1	-
9	595327502	PANEL *For 967930101-00*	1	-
10	582481004	PANEL -	1	-
11	582480803	PANEL -	1	-
12	582480804	PANEL -	1	-
13	589304602	PLATE -	1	-
14	574228602	PLATE *For 96767860300, 96767860200, 96767860101, 967678701-00, 967678601-00*	1	-
14	596694102	PLATE *For 967930101-00*	1	-
15	582478701	BUMPER -	2	-
16	575811501	BUMPER -	2	-
17	522801401	BUMPER -	4	-
18	539102587	ABSORBER -	2	-
19	589745202	COVER -	1	-
20	582480502	CROSS MEMBER -	1	-
21	589744001	ISOLATOR -	2	-
22	539104411	KNOB -	1	-
23	591344501	KNOB -	2	-
24	591101701	PIN	2	-

Ref.	Article N.	Description	Qty	Kit
		-		
25	591101601	PIN -	2	-
26	582460702	PLATE -	1	-
27	582460606	BRACKET *MX-14*	1	-
28	589500701	BRACKET -	1	-
29	539104763	CLIP -	7	-
30	589806801	NUT -	2	-
31	539111028	NUTSERT 5/16-18 THICK GRIP -	2	-
32	525612801	SCREW -	4	-
33	574233801	SCREW -	2	-
34	525544001	BOLT -	2	-
35	539113226	BOLT -	4	-
36	577117701	SCREW -	4	-
37	539100145	BOLT -	2	-
38	872140404	BOLT -	4	-
39	872140406	BOLT *For 96767860300, 96767860200, 96767860101, 967678701-00, 967678601-00*	2	-
39	539115620	1/4-20X3/4 CARR BLT *For 967930101-00*	2	-
40	539990316	BOLT -	14	-
41	539990208	SCREW -	2	-
42	539110303	BOLT -	4	-
43	580754601	BOLT -	6	-
44	589797201	SCREW -	2	-

Ref.	Article N.	Description	Qty	Kit
45	817490408	SCREW -	2	-
46	585986101	BOLT -	2	-
47	525829101	NUT -	6	-
48	539976978	NUT -	6	-
49	521996501	NUT -	12	-
50	539112899	NUT, 5/16-18, NYLOC -	21	-
51	539102653	WASHER -	4	-
52	539108120	NUT *For 967930101-00*	1	-
53	583611601	BOLT *For 967930101-00*	1	-
54	591176601	BOLT *For 967930101-00*	1	-
58	590877803	ROPS *ROPS ASSY*	1	-

DECALS

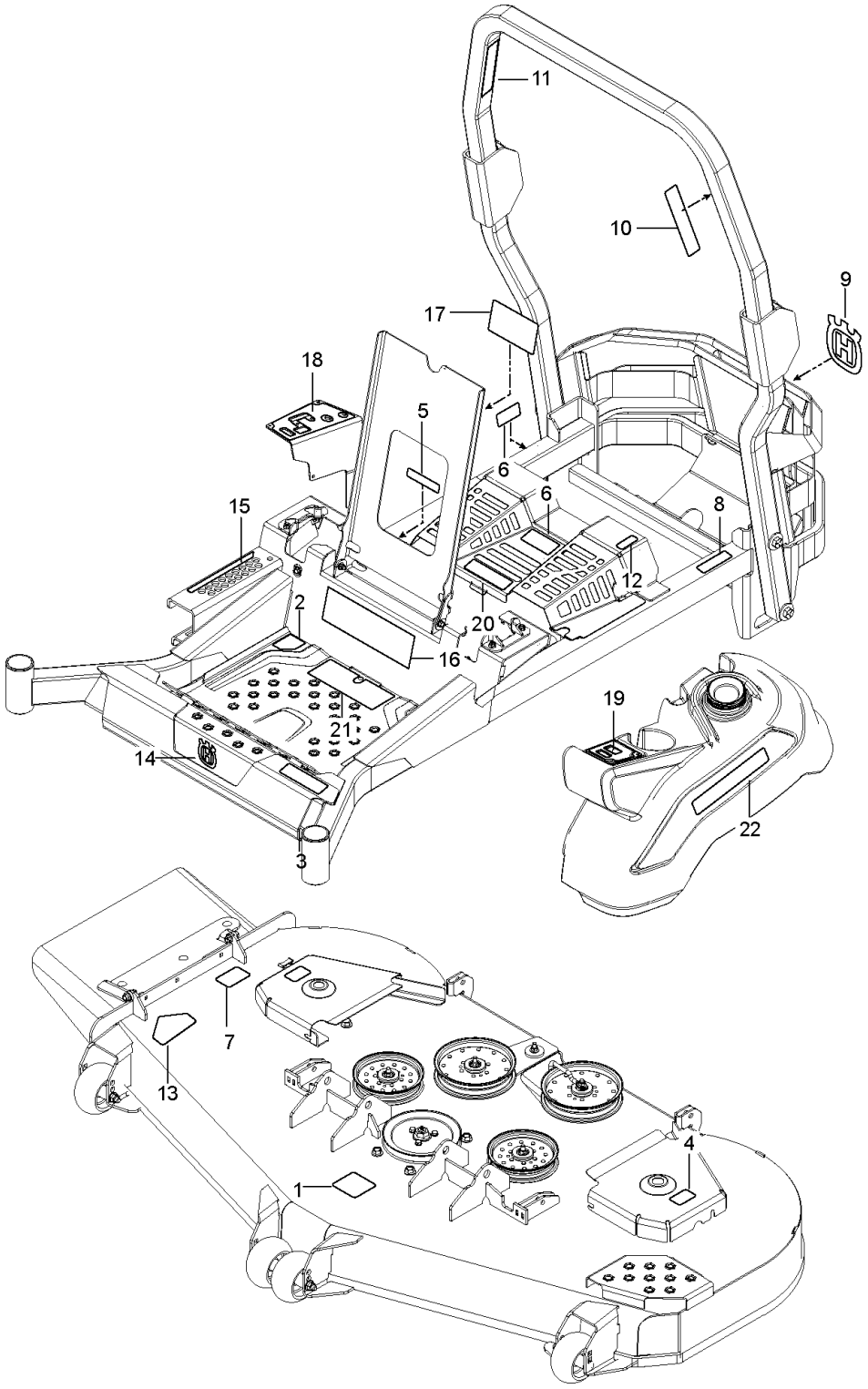

Ref.	Article N.	Description	Qty	Kit
1	582483902	PANEL	1	-
2	582483602	PANEL	1	-
3	586161801	HOUR METER	1	-
4	574455401	SWITCH	1	-
5	589887201	SWITCH	1	-

Ref.	Article N.	Description	Qty	Kit
6	574455501	KEY	1	-
7	581878301	LIGHT *For 967930101-00, 967678701-00*	1	-
7	574206901	CABLE *CHOKE/ For 96767860300, 96767860200, 96767860101*	1	-
8	582120301	THROTTLE CONTROL *46*	1	-
9	589819501	BATTERY *MX-9/ For 967930101-00, 967678701-00, 967678601-00*	1	-
9	589819502	BATTERY *MX-12/ For 967930101-00, 967678701-00, 967678601-00*	1	-
9	589819503	BATTERY *MX-14/ For 96767860300, 96767860200, 96767860101*	1	-
9	582460606	BRACKET *MX-14*	1	-
9	596990201	SERVICE KIT *MX-12 Bracket (Battery not included) For 967930101-00, 967678701-00, 967678601-00*	1	-
10	539103178	NUT CAP	1	-
11	539132624	KNOB	1	-
12	539102759	INSULATOR	2	-
13	592872701	FUEL GAUGE	2	-
14	539114341	SCREW	6	-
15	532199855	SCREW	2	-
16	582460801	SCREW	2	-
21	593777801	HARNESS *FOR CARB ENGINES*	1	-
21	593777803	HARNESS *FOR KOHLER & YAMAHA EFI*	1	-
22	589838501	HARNESS	1	-
23	574514001	TIMER *NOT SHOWN*	1	-
24	590632101	CABLE *NOT SHOWN*	1	-
25	539101714	SOLENOID *NOT SHOWN (SOLENOID KAW FX)*	1	-
1	574437301	DECAL *BELT ROUTING*	1	-
2	590209401	DECAL *MOTION/BRAKE RIGHT*	1	-
3	590209501	DECAL *MOTION_BRAKE_LEFT*	1	-

Ref.	Article N.	Description	Qty	Kit
3	590807601	DECAL *Z554X*	1	-
4	581724301	DECAL *NO STEP*	2	-
5	539105745	DECAL *BATTERY WARNING*	1	-
6	539105744	DECAL *DANGER BELT*	2	-
7	581724401	DECAL *DEFLECTOR WARNING*	1	-
8	532424102	DECAL *SPARK ARRESTOR*	1	-
9	574455001	DECAL *CROWN LARGE*	1	-
10	574569006	DECAL *ROPS/ For 96767860300, 96767860200,*	1	-
10	593011101	DECAL *ROPS/ For 967930101-00, 967678701-00, 967678601-00*	1	-
11	574569002	DECAL *ROPS WARNING*	1	-
12	574569401	DECAL *FUSE*	1	-
13	584904601	DECAL *DECK/DEFLECT WARNING*	1	-
14	532428676	DECAL *CROWN SMALL*	1	-
15	590799301	DECAL *DECK HEIGHT*	1	-
16	590210001	DECAL *COMMERCIAL*	1	-
17	590846801	DECAL *MAINTANCE/SERVICE*	1	-
18	590210301	DECAL *CONTROL PANEL RIGHT - CHOKE /For 96767860300, 96767860200, 96767860101*	1	-
18	590210302	DECAL *CONTROL PANEL RIGHT-EFI/ For 967930101-00, 967678701-00, 967678601-00*	1	-
19	590210501	DECAL *CONTROL PANEL LEFT*	1	-
20	590209701	DECAL *TRANSMISSION WARNING*	1	-
21	590209202	DECAL	1	-

Ref.	Article N.	Description	Qty	Kit
		START W/ CHOKE		
22	577469001	DECAL *EMBLEM*	2	-
30	577150101	DECAL *FUEL - NOT SHOWN*	1	-
31	590807801	DECAL *Z560X / For 967678601-00, 967678701-00*	1	-
32	590807901	DECAL *Z572X / For 967678601-00, 967678701-00*	1	-
1	582733302	PLATE -	1	-
2	525749501	CLUTCH -	1	-
3	522676702	STOP -	1	-
4	539118911	NIPPLE -	1	-
5	522837001	PLUG -	1	-
6	510019801	PULLEY -	1	-
7	539119680	ADAPTER -	1	-
8	539105072	90DEG.ELBOW 3/8NPT -	1	-
9	525749901	KEY -	1	-
10	587886001	MUFFLER -	1	-
11	539109618	O-RING -	1	-
12	505280001	TIE WRAP -	1	-
13	581332801	BOLT -	1	-
14	574233801	SCREW -	4	-
15	539990563	SCREW -	4	-
16	874780716	BOLT -	1	-
17	539990208	SCREW -	2	-

Ref.	Article N.	Description	Qty	Kit
18	539102933	SCREW -	2	-
19	539108120	NUT -	1	-
20	539112899	NUT, 5/16-18, NYLOC -	8	-
21	539102582	NUT -	1	-
22	539102593	WASHER -	4	-
23	539990247	WASHER -	1	-
24	539125626	WASHER -	1	-
25	586839701	GASKET *NOT SHOWN*	2	-
1	582483105	FUEL TANK ASSY *For 96767860300, 96767860200, 96767860101, 967678701-00, 967678601-00*	1	-
1	590680505	TANK UNIT ASSY *For 967930101-00*	1	-
2	582481705	FUEL TANK ASSY *For 96767860300, 96767860200, 96767860101, 967678701-00, 967678601-00*	1	-
2	590680405	TANK UNIT ASSY *For 967930101-00*	1	-
3	587044550	HOSE -	1	-
4	587044526	HOSE -	1	-
5	587044517	HOSE -	1	-
6	587044846	HOSE -	1	-
7	587044808	HOSE *For 967930101-00*	1	-
7	587044833	HOSE *For 96767860300, 96767860200, 96767860101, 967678701-00, 967678601-00*	1	-
8	587044824	HOSE -	1	-
9	574206602	FITTING -	1	-
10	575018101	CAP -	2	-
11	582483301	GUARD	1	-

Ref.	Article N.	Description	Qty	Kit
		-		
12	590638801	SENSOR -	2	-
13	576618101	TANK VENT -	2	-
14	539102679	VALVE -	1	-
15	582482301	GUARD -	1	-
15	525865402	TUBE ASSY -	1	-
16	532003645	BUSHING -	2	-
17	590209101	GROMMET -	2	-
18	584648201	GROMMET -	2	-
19	582481502	BRACKET -	2	-
20	582481602	BRACKET -	2	-
20	525865403	TUBE ASSY -	1	-
21	582483401	COVER -	1	-
22	539912222	CLAMP -	6	-
23	575436501	CLAMP -	6	-
24	582482601	CLIP -	8	-
25	505280001	TIE WRAP -	5	-
26	874490548	BOLT -	6	-
27	582482401	COVER -	1	-
27	590257301	SCREW -	6	-
28	817490516	SCREW -	6	-
29	582484201	SCREW -	8	-

Ref.	Article N.	Description	Qty	Kit
30	539112899	NUT, 5/16-18, NYLOC -	20	-
31	532126684	SHIM -	6	-
1	591359901	SHIELD -	1	-
2	582461206	BRACKET -	1	-
3	539102587	ABSORBER -	4	-
4	582461701	HOLDER ASSY -	3	-
5	582461303	ROD -	2	-
6	874780412	BOLT -	3	-
7	874490548	BOLT -	4	-
8	503200001	SCREW EHHFM -	3	-
9	587592101	SCREW -	4	-
10	521991101	NUT -	2	-
11	539112899	NUT, 5/16-18, NYLOC -	8	-
12	532191730	NUT -	3	-
13	731231405	HEXAGON NUT -	3	-
14	873350800	NUT -	2	-
1	582463102	ARM -	1	-
2	501603701	BEARING -	2	-
3	582479102	BRACKET -	4	-
4	582480101	CLAMP -	4	-
5	529311401	FITTING -	2	-
6	582479404	FRAME	1	-

Ref.	Article N.	Description	Qty	Kit
		-		
7	582480204	HOSE -	2	-
8	586933802	MOUNT -	1	-
9	582468101	SHAFT -	1	-
10	587654101	PULLEY -	2	-
11	582716201	ROD END -	1	-
12	582468401	SPRING -	1	-
13	574499201	TANK -	2	-
14	582480001	TRANSMISSION -	1	-
15	582480002	TRANSMISSION -	1	-
16	576127201	FILTER -	1	-
17	582480402	V-BELT -	1	-
18	874490652	SCREW -	1	-
19	574210601	SCREW -	8	-
20	525828901	BOLT *For 96767860300, 96767860200, 96767860101*	8	-
20	874490848	SCREW *For 967930101-00, 967678701-00, 967678601-00*	8	-
21	539100145	BOLT -	2	-
22	539990645	BOLT -	2	-
23	532165857	SCREW -	4	-
24	539913847	BOLT -	1	-
25	521991101	NUT -	8	-
26	521996501	NUT -	6	-

Ref.	Article N.	Description	Qty	Kit
27	819133210	WASHER -	1	-
1	591359704	CUTTING DECK -	1	-
2	588264805	DRIVE BELT -	1	-
3	575265901	BLADE -	3	-
4	582462702	ARM -	1	-
5	521979701	PULLEY -	3	-
6	510015101	PULLEY -	3	-
7	582463003	PULLEY -	1	-
8	582463006	PULLEY -	1	-
9	582468801	CHUTE -	1	-
10	510254501	SHIELD -	3	-
11	574169601	ROLLER -	4	-
12	574196401	TUBE -	2	-
13	574196501	TUBE -	1	-
14	539131518	BEARING -	2	-
15	510263701	BEARING -	2	-
16	582467302	BRACKET -	1	-
17	582463203	BRACKET *For 96767860300, 96767860200, 96767860101, 967678701-00, 967678601-00*	1	-
17	582463207	BRACKET *For 967930101-00*	1	-
18	582463204	BRACKET *For 96767860300, 96767860200, 96767860101, 967678701-00, 967678601-00*	1	-
18	582463208	BRACKET *For 967930101-00*	1	-
19	582472502	BELT GUARD	1	-

Ref.	Article N.	Description	Qty	Kit
		For 96767860300, 96767860200, 96767860101, 967678701-00, 967678601-00		
19	594913302	BELT GUIDE *For 967930101-00*	1	-
20	582470201	KEEPER -	1	-
21	539104411	KNOB -	2	-
22	590523702	PLATE -	1	-
23	582466401	PLATE -	1	-
24	582468101	SHAFT -	1	-
25	582468301	SPACER -	1	-
26	589455201	SPACER -	1	-
27	582468001	SPRING -	1	-
28	510437502	BAFFLE -	1	-
29	539104763	CLIP -	2	-
30	539115620	1/4-20X3/4 CARR BLT -	4	-
31	872140610	BOLT -	3	-
32	510022301	SCREW -	2	-
33	872140628	BOLT -	2	-
34	872140864	BOLT -	1	-
35	874490644	BOLT -	2	-
36	574210601	SCREW -	18	-
37	525612801	SCREW -	2	-
38	521996601	SCREW -	1	-
39	582476401	SCREW -	4	-

Ref.	Article N.	Description	Qty	Kit
40	539130315	BOLT -	9	-
41	539119007	SCREW -	3	-
42	574202001	BOLT -	1	-
43	539913847	BOLT -	1	-
44	521996501	NUT -	10	-
45	539112899	NUT, 5/16-18, NYLOC -	4	-
46	521991101	NUT -	3	-
47	539109332	NUT -	1	-
48	539976978	NUT -	4	-
49	539106504	WASHER -	2	-
50	539109600	WASHER -	9	-
1	582462602	SHAFT -	1	-
2	592654001	ARM -	1	-
2	592654002	ARM -	1	-
3	582465402	ARM -	2	-
4	582463902	ARM -	2	-
5	582462001	ARM -	1	-
6	582462002	ARM -	1	-
7	582464601	ROD -	2	-
8	582472801	ROD -	1	-
9	582471401	ROD -	1	-
10	510408301	PEDAL	1	-

Ref.	Article N.	Description	Qty	Kit
		-		
11	510089501	PAD -	1	-
12	510023902	BLOCK -	4	-
13	582467201	BLOCK -	1	-
14	582466902	BRACKET -	1	-
15	582468902	BRACKET -	2	-
16	589454103	LEVER -	1	-
17	592654101	LEVER -	1	-
18	539109693	LIFT CHAIN - 3 LINK -	2	-
18	589454104	LEVER -	1	-
19	539102641	CHAIN -	2	-
20	582464801	PIVOT -	2	-
21	582763902	PLATE -	1	-
22	589453201	LEVER ASSY -	1	-
23	582469001	SHACKLE -	2	-
24	582464201	SHAFT -	2	-
25	593091801	SPRING -	2	-
26	582471301	SPRING -	1	-
27	582467001	SWIVEL -	1	-
28	582467101	SWIVEL -	1	-
29	582469901	BUSHING -	2	-
30	582469801	BUSHING -	2	-

Ref.	Article N.	Description	Qty	Kit
31	510089201	BUSHING -	5	-
32	539912730	RING -	1	-
33	539990870	RING -	2	-
34	590465501	PIN -	1	-
35	539102889	SPLIT PIN -	2	-
36	582466701	SCREW -	4	-
37	582472601	SCREW -	2	-
38	574202001	BOLT -	2	-
39	539990580	SCREW -	1	-
40	589786001	SCREW -	4	-
41	501064102	SCREW -	3	-
42	501064101	SCREW -	4	-
43	510408201	BOLT -	1	-
44	539101175	SCREW -	4	-
45	582465601	SCREW -	2	-
46	589677701	NUT -	3	-
47	539976978	NUT -	1	-
48	539990546	NUT -	2	-
49	539119124	NUT -	4	-
50	539110340	NUT -	3	-
51	521996501	NUT -	6	-
52	539112899	NUT, 5/16-18, NYLOC	2	-

Ref.	Article N.	Description	Qty	Kit
		-		
53	539132019	NUT -	4	-
54	582466601	NUT -	4	-
55	539108732	NUT 3/8-24 HEX JAM ZD -	2	-
56	539991043	BUSHING -	2	-
1	579866104	SEAT ASSY -	1	-
1	582460103	SEAT *Fits 97058500100*	1	-
2	582478801	BAR -	1	-
3	582478201	BRACKET -	2	-
4	590555002	BRACKET -	1	-
5	590481801	ISOLATOR -	8	-
6	539116377	INSERT -	4	-
7	590373501	LATCH -	1	-
8	590506802	PLATE -	1	-
9	590507201	ROD -	1	-
10	539113952	SPRING -	2	-
11	582478101	NUT -	4	-
12	532192749	SWITCH -	1	-
13	539108392	HCS 5/16-18 X 5/8 GR 5 ZD -	4	-
14	582478901	SCREW -	2	-
15	582478501	SCREW -	2	-
16	539990316	BOLT -	8	-

Ref.	Article N.	Description	Qty	Kit
17	582478601	NUT -	2	-
18	539913847	BOLT -	1	-
19	539112899	NUT, 5/16-18, NYLOC -	6	-
20	522023401	WASHER -	2	-
21	532413524	WASHER -	8	-
22	539990118	WASHER -	2	-
23	539990187	WASHER -	4	-
24	579866109	SEAT ASSY *Knob*	1	-
25	579866108	SEAT ASSY *REPLACEMENT PAD ONLY*	2	-
1	580942201	HUB -	3	-
2	580942101	SHAFT -	3	-
3	580942701	V-RING -	6	-
4	580942601	SEAL -	6	-
5	583911101	BEARING KIT *ALSO ORDER TOOL KIT*	3	-
6	580942301	SPACER -	3	-
7	580942501	CARRIER -	3	-
8	539976998	NIPPLE -	3	-
9	539977326	FITTING -	3	-
10	539130653	NUT -	3	-
11	580943306	SPINDLE -	3	-
12	580942801	SHIM *For 967678601-00, 967678701-00*	1	-
13	574754201	KIT	1	-

Ref.	Article N.	Description	Qty	Kit
		NOT SHOWN		
1	582475501	LEVER *LEFT*	1	-
2	582475502	LEVER *RIGHT*	1	-
3	596925601	ROD *RIGHT SIDE ASSY*	1	-
3	596925701	ROD *LEFT SIDE ASSY*	1	-
3	598852501	SERVICE KIT *COUPLER KIT. CONTAINS (2) COUPLERS THAT FITS BOTH LH/RH SIDES. REF # 4 SCREWS INTO THIS COUPLER*	1	-
4	588692502	ROD *ROD.END.MALE.LH THREAD*	2	-
5	579764601	JOINT *JOINT.RH.THREAD.FEMALE.5/16*	2	-
6	539923515	SPACER	2	-
7	597744702	BRACKET	2	-
8	592653801	CARRIER *w/BEARINGS LEFT*	1	-
8	592653802	CARRIER *w/BEARINGS RIGHT*	1	-
9	592653901	CARRIER	2	-
12	582477802	BRACKET *LEFT*	1	-
12	582477804	BRACKET *RIGHT*	1	-
13	582476902	BRACKET	2	-
14	582475102	BRACKET	4	-
15	587225301	PIN	2	-
16	582551901	CLIP	2	-
17	588775401	DAMPER	2	-
18	582477401	PIN	2	-
19	589505102	PIVOT	2	-
20	589489601	RETAINER	2	-
21	589500902	SWITCH	2	-
22	582475001	SPACER	2	-
23	582711303	SPACER	2	-
24	582477001	SPRING	4	-
25	532151332	SPRING	2	-
26	582477702	SPRING	2	-

Ref.	Article N.	Description	Qty	Kit
27	597744501	ADAPTER	2	-
28	582477501	CABLE	2	-
29	539110607	STUD	4	-
30	582477602	BRACKET	2	-
31	582476801	BEARING	4	-
32	539131518	BEARING	8	-
33	532170165	BOLT	4	-
34	525544001	BOLT	4	-
35	525465402	SCREW	2	-
36	539976934	SCREW	4	-
37	582477102	SCREW	4	-
38	582476401	SCREW	4	-
39	596240801	BOLT	2	-
40	595901501	BOLT	4	-
41	577117701	SCREW	2	-
42	589505602	SCREW	2	-
44	594944401	NUT	14	-
45	596040901	HEXAGON NUT	4	-
46	521996502	NUT	6	-
47	539990184	NUT	4	-
48	596134901	WASHER	2	-
49	539990187	WASHER	4	-
50	596204101	WASHER	2	-
51	522023401	WASHER	4	-
1	582475501	LEVER -	1	-
2	582475502	LEVER -	1	-
3	501567001	ROD *For 967930101-00*	1	-
3	592653701	CONTROL *LEFT For 96767860300, 96767860200, 96767860101, 967678701. 967678601*	1	-
3	592653702	CONTROL *RIGHT*	1	-
4	588692502	ROD -	2	-
5	579764601	JOINT -	2	-
6	582484001	BELLOWS *For 967930101-00*	1	-

Ref.	Article N.	Description	Qty	Kit
6	591193301	SERVICE KIT *For 96767860300, 96767860200, 96767860101, 967678701-00, 967678601-00*	1	-
7	582484101	BELLOWS *For 967930101-00*	1	-
7	591193302	SERVICE KIT *For 96767860300, 96767860200, 96767860101, 967678701-00, 967678601-00*	1	-
8	592653801	CARRIER *w/BEARINGS LEFT/ For 96767860300, 96767860200, 96767860101, 967678701-00, 967678601-00*	1	-
8	592653802	CARRIER *w/BEARINGS LEFT/ For 967930101-00*	1	-
9	592653901	CARRIER -	2	-
10	592724002	CONTROL -	1	-
10	592724001	CONTROL -	1	-
11	592653501	PARKING BRAKE -	1	-
12	582477802	BRACKET *LEFT*	1	-
12	582477804	BRACKET *RIGHT*	1	-
13	582476901	BRACKET -	2	-
14	582475102	BRACKET -	4	-
15	587225301	PIN -	2	-
16	582551901	CLIP -	2	-
17	588775401	DAMPER -	2	-
18	582477401	PIN -	2	-
19	589505101	PIVOT -	2	-
20	589489601	RETAINER -	2	-
21	589500901	SWITCH -	2	-
22	582475001	SPACER -	2	-

Ref.	Article N.	Description	Qty	Kit
23	582711303	SPACER -	2	-
24	582477001	SPRING -	4	-
25	532151332	SPRING -	2	-
26	582477701	SPRING -	2	-
27	582477201	YOKE -	2	-
28	582477501	CABLE -	2	-
29	539110607	STUD -	4	-
30	582477601	BRACKET -	2	-
31	582476801	BEARING -	4	-
32	539131518	BEARING -	8	-
33	539110303	BOLT -	4	-
34	525544001	BOLT -	4	-
35	525465401	SCREW -	2	-
36	539976934	SCREW -	4	-
37	582477101	SCREW -	4	-
38	582476401	SCREW -	2	-
39	539115574	EYE BOLT -	2	-
40	539990208	SCREW -	4	-
41	577117701	SCREW -	6	-
42	589505601	SCREW -	2	-
43	582482901	RIVET -	12	-
44	539112899	NUT, 5/16-18, NYLOC	14	-

Ref.	Article N.	Description	Qty	Kit
		-		
45	539990223	NUT -	4	-
46	521996501	NUT -	6	-
47	539990184	NUT -	4	-
48	539990692	WASHER -	2	-
49	539990187	WASHER -	4	-
50	819111116	WASHER -	2	-
51	522023401	WASHER -	2	-
1	599893003	COVER -	1	-
2	599893004	COVER -	1	-
3	596564002	BOLT -	4	-
1	599156701	TIRE *fits 967669801-00, 967699802-00*	2	-
1	510154601	TIRE *Use From SN: 060117F000001 To SN: 090820F999999*	2	-
2	539105152	TIRE *24x12-12 Tire Only*	2	-
2	510154502	WHEEL RIM *Rim Only*	2	-
2	510154501	TIRE *Tire & Rim Assembly*	2	-
3	525611902	FORK -	2	-
4	510034001	CAP -	2	-
5	510034301	SEAL -	2	-
6	510034403	BEARING -	4	-
7	596623501	VALVE -	2	-
8	590690701	SPACER *Use From SN: 060117F000001 To SN: 090820F999999*	4	-

Ref.	Article N.	Description	Qty	Kit
9	590704902	SPACER *Use From SN: 060117F000001 To SN: 090820F999999*	2	-
10	594946501	BOLT -	2	-
11	522842602	NUT -	2	-
12	587653902	NUT -	8	-
13	873930800	NUT *For 967678802-01, 967678801-01*	2	-
13	521991102	NUT *For 96793040300, 967669703-01*	2	-
14	595086801	WASHER -	2	-
15	574824701	WASHER -	2	-
16	539102484	BEARING *Use after SN: 090920F000001*	4	-
17	539105307	ROLLER BEARING *Use after SN: 090920F000001*	4	-
18	539912234	VALVE *Use after SN: 090920F000001*	2	-
19	599405101	SHIM *Use after SN: 090920F000001*	2	-
20	539133007	WASHER *Use after SN: 090920F000001*	2	-
21	539105522	TIRE *13X6.5-6 Tire Only Use After SN: 090920F000001*	2	-
21	581199501	WHEEL ASSY *Use after SN: 090920F000001*	2	-
22	575334901	SPACER *Use after SN: 090920F000001*	2	-
23	596623501	VALVE -	2	-
24	597383801	SERVICE KIT *Use From SN: 060117F000001 To SN: 090820F999999*	2	-
1	597383801	SERVICE KIT -	1	-
1	510154601	TIRE -	2	-
2	522905101	TIRE -	2	-
3	525611902	FORK	2	-

Ref.	Article N.	Description	Qty	Kit
		-		
4	510034001	CAP -	2	-
4	522905102	TIRE -	2	-
5	510034301	SEAL -	2	-
6	510034403	BEARING -	4	-
7	539101474	NIPPLE -	2	-
8	590690701	SPACER -	4	-
9	590704901	SPACER -	2	-
10	539105517	BOLT -	2	-
11	522842601	NUT -	2	-
12	587653902	NUT -	8	-
13	873930800	NUT -	2	-
14	539990250	WASHER -	2	-
15	574824701	WASHER -	2	-
1	591359801	FRAME *w/ SAFETY DECALS*	1	-
2	522675702	BUMPER -	1	-
3	587898002	GUARD -	1	-
4	589808802	BRACKET -	2	-
5	589807202	BRACKET -	1	-
6	589448202	BRACKET -	1	-
7	589448204	BRACKET -	1	-
8	582481101	BRACKET -	2	-

Ref.	Article N.	Description	Qty	Kit
9	582481002	PANEL *For 96767860300, 96767860200, 96767860101, 967678701-00, 967678601-00*	1	-
9	595327502	PANEL *For 967930101-00*	1	-
10	582481004	PANEL -	1	-
11	582480803	PANEL -	1	-
12	582480804	PANEL -	1	-
13	589304602	PLATE -	1	-
14	574228602	PLATE *For 96767860300, 96767860200, 96767860101, 967678701-00, 967678601-00*	1	-
14	596694102	PLATE *For 967930101-00*	1	-
15	582478701	BUMPER -	2	-
16	575811501	BUMPER -	2	-
17	522801401	BUMPER -	4	-
18	539102587	ABSORBER -	2	-
19	589745202	COVER -	1	-
20	582480502	CROSS MEMBER -	1	-
21	589744001	ISOLATOR -	2	-
22	539104411	KNOB -	1	-
23	591344501	KNOB -	2	-
24	591101701	PIN -	2	-
25	591101601	PIN -	2	-
26	582460702	PLATE -	1	-
27	582460606	BRACKET *MX-14*	1	-
28	589500701	BRACKET	1	-

Ref.	Article N.	Description	Qty	Kit
		-		
29	539104763	CLIP -	7	-
30	589806801	NUT -	2	-
31	539111028	NUTSERT 5/16-18 THICK GRIP -	2	-
32	525612801	SCREW -	4	-
33	574233801	SCREW -	2	-
34	525544001	BOLT -	2	-
35	539113226	BOLT -	4	-
36	577117701	SCREW -	4	-
37	539100145	BOLT -	2	-
38	872140404	BOLT -	4	-
39	872140406	BOLT *For 96767860300, 96767860200, 96767860101, 967678701-00, 967678601-00*	2	-
39	539115620	1/4-20X3/4 CARR BLT *For 967930101-00*	2	-
40	539990316	BOLT -	14	-
41	539990208	SCREW -	2	-
42	539110303	BOLT -	4	-
43	580754601	BOLT -	6	-
44	589797201	SCREW -	2	-
45	817490408	SCREW -	2	-
46	585986101	BOLT -	2	-
47	525829101	NUT -	6	-
48	539976978	NUT -	6	-

Ref.	Article N.	Description	Qty	Kit
49	521996501	NUT -	12	-
50	539112899	NUT, 5/16-18, NYLOC -	21	-
51	539102653	WASHER -	4	-
52	539108120	NUT *For 967930101-00*	1	-
53	583611601	BOLT *For 967930101-00*	1	-
54	591176601	BOLT *For 967930101-00*	1	-
58	590877803	ROPS *ROPS ASSY*	1	-

ENGINE MOUNTING, GUARDS AND MUFFLER

For 96767860300, 96767860200, 96767860101, 967678601-00

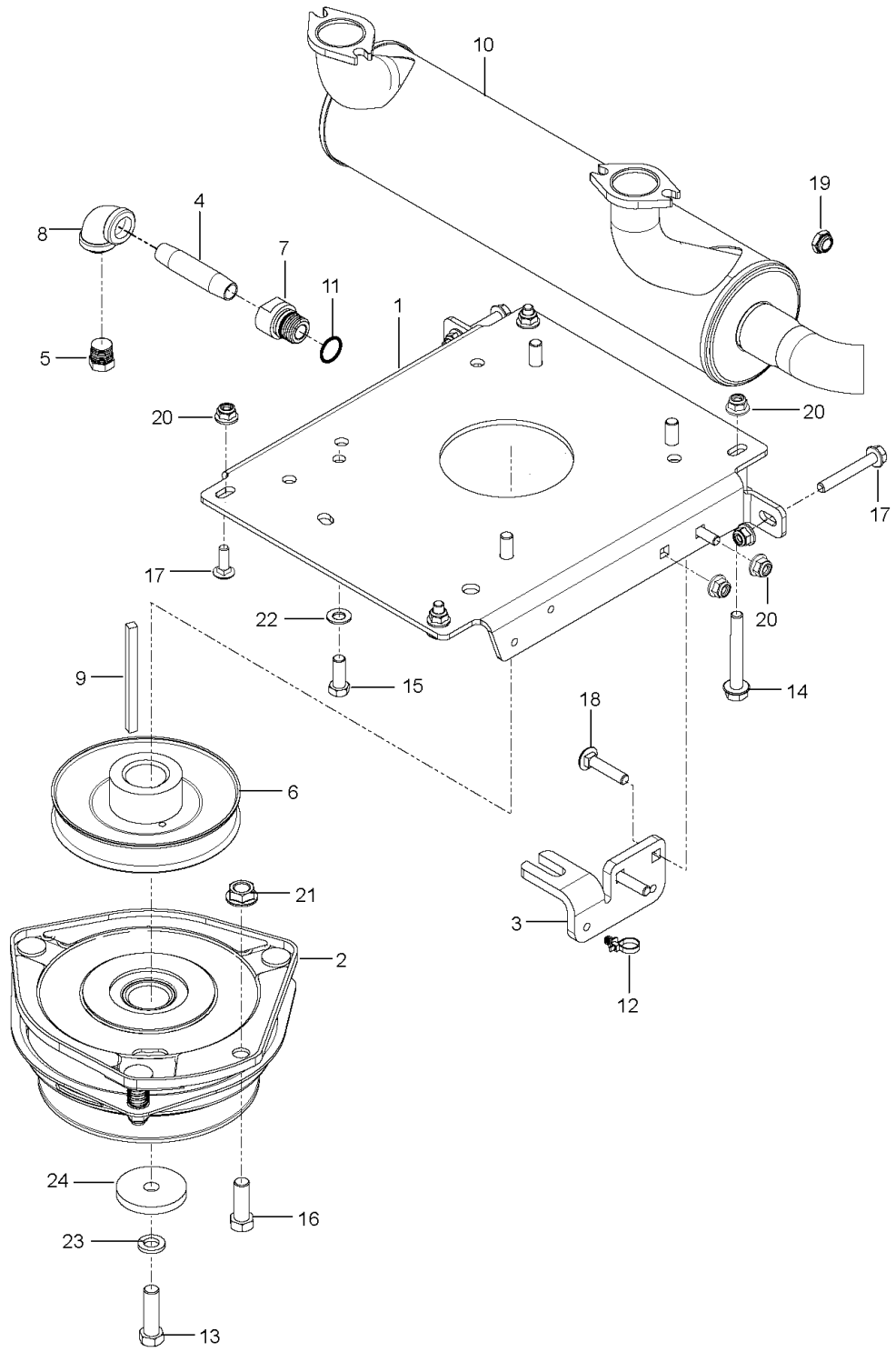

Ref.	Article N.	Description	Qty	Kit
1	582483902	PANEL	1	-
2	582483602	PANEL	1	-
3	586161801	HOUR METER	1	-
4	574455401	SWITCH	1	-
5	589887201	SWITCH	1	-

Ref.	Article N.	Description	Qty	Kit
6	574455501	KEY	1	-
7	581878301	LIGHT *For 967930101-00, 967678701-00*	1	-
7	574206901	CABLE *CHOKE/ For 96767860300, 96767860200, 96767860101*	1	-
8	582120301	THROTTLE CONTROL *46*	1	-
9	589819501	BATTERY *MX-9/ For 967930101-00, 967678701-00, 967678601-00*	1	-
9	589819502	BATTERY *MX-12/ For 967930101-00, 967678701-00, 967678601-00*	1	-
9	589819503	BATTERY *MX-14/ For 96767860300, 96767860200, 96767860101*	1	-
9	582460606	BRACKET *MX-14*	1	-
9	596990201	SERVICE KIT *MX-12 Bracket (Battery not included) For 967930101-00, 967678701-00, 967678601-00*	1	-
10	539103178	NUT CAP	1	-
11	539132624	KNOB	1	-
12	539102759	INSULATOR	2	-
13	592872701	FUEL GAUGE	2	-
14	539114341	SCREW	6	-
15	532199855	SCREW	2	-
16	582460801	SCREW	2	-
21	593777801	HARNESS *FOR CARB ENGINES*	1	-
21	593777803	HARNESS *FOR KOHLER & YAMAHA EFI*	1	-
22	589838501	HARNESS	1	-
23	574514001	TIMER *NOT SHOWN*	1	-
24	590632101	CABLE *NOT SHOWN*	1	-
25	539101714	SOLENOID *NOT SHOWN (SOLENOID KAW FX)*	1	-
1	574437301	DECAL *BELT ROUTING*	1	-
2	590209401	DECAL *MOTION/BRAKE RIGHT*	1	-
3	590209501	DECAL *MOTION_BRAKE_LEFT*	1	-

Ref.	Article N.	Description	Qty	Kit
3	590807601	DECAL *Z554X*	1	-
4	581724301	DECAL *NO STEP*	2	-
5	539105745	DECAL *BATTERY WARNING*	1	-
6	539105744	DECAL *DANGER BELT*	2	-
7	581724401	DECAL *DEFLECTOR WARNING*	1	-
8	532424102	DECAL *SPARK ARRESTOR*	1	-
9	574455001	DECAL *CROWN LARGE*	1	-
10	574569006	DECAL *ROPS/ For 96767860300, 96767860200,*	1	-
10	593011101	DECAL *ROPS/ For 967930101-00, 967678701-00, 967678601-00*	1	-
11	574569002	DECAL *ROPS WARNING*	1	-
12	574569401	DECAL *FUSE*	1	-
13	584904601	DECAL *DECK/DEFLECT WARNING*	1	-
14	532428676	DECAL *CROWN SMALL*	1	-
15	590799301	DECAL *DECK HEIGHT*	1	-
16	590210001	DECAL *COMMERCIAL*	1	-
17	590846801	DECAL *MAINTANCE/SERVICE*	1	-
18	590210301	DECAL *CONTROL PANEL RIGHT - CHOKE /For 96767860300, 96767860200, 96767860101*	1	-
18	590210302	DECAL *CONTROL PANEL RIGHT-EFI/ For 967930101-00, 967678701-00, 967678601-00*	1	-
19	590210501	DECAL *CONTROL PANEL LEFT*	1	-
20	590209701	DECAL *TRANSMISSION WARNING*	1	-
21	590209202	DECAL	1	-

Ref.	Article N.	Description	Qty	Kit
		START W/ CHOKE		
22	577469001	DECAL *EMBLEM*	2	-
30	577150101	DECAL *FUEL - NOT SHOWN*	1	-
31	590807801	DECAL *Z560X / For 967678601-00, 967678701-00*	1	-
32	590807901	DECAL *Z572X / For 967678601-00, 967678701-00*	1	-
1	582733302	PLATE -	1	-
2	525749501	CLUTCH -	1	-
3	522676702	STOP -	1	-
4	539118911	NIPPLE -	1	-
5	522837001	PLUG -	1	-
6	510019801	PULLEY -	1	-
7	539119680	ADAPTER -	1	-
8	539105072	90DEG.ELBOW 3/8NPT -	1	-
9	525749901	KEY -	1	-
10	587886001	MUFFLER -	1	-
11	539109618	O-RING -	1	-
12	505280001	TIE WRAP -	1	-
13	581332801	BOLT -	1	-
14	574233801	SCREW -	4	-
15	539990563	SCREW -	4	-
16	874780716	BOLT -	1	-
17	539990208	SCREW -	2	-

Ref.	Article N.	Description	Qty	Kit
18	539102933	SCREW -	2	-
19	539108120	NUT -	1	-
20	539112899	NUT, 5/16-18, NYLOC -	8	-
21	539102582	NUT -	1	-
22	539102593	WASHER -	4	-
23	539990247	WASHER -	1	-
24	539125626	WASHER -	1	-
25	586839701	GASKET *NOT SHOWN*	2	-
1	582483105	FUEL TANK ASSY *For 96767860300, 96767860200, 96767860101, 967678701-00, 967678601-00*	1	-
1	590680505	TANK UNIT ASSY *For 967930101-00*	1	-
2	582481705	FUEL TANK ASSY *For 96767860300, 96767860200, 96767860101, 967678701-00, 967678601-00*	1	-
2	590680405	TANK UNIT ASSY *For 967930101-00*	1	-
3	587044550	HOSE -	1	-
4	587044526	HOSE -	1	-
5	587044517	HOSE -	1	-
6	587044846	HOSE -	1	-
7	587044808	HOSE *For 967930101-00*	1	-
7	587044833	HOSE *For 96767860300, 96767860200, 96767860101, 967678701-00, 967678601-00*	1	-
8	587044824	HOSE -	1	-
9	574206602	FITTING -	1	-
10	575018101	CAP -	2	-
11	582483301	GUARD	1	-

Ref.	Article N.	Description	Qty	Kit
		-		
12	590638801	SENSOR -	2	-
13	576618101	TANK VENT -	2	-
14	539102679	VALVE -	1	-
15	582482301	GUARD -	1	-
15	525865402	TUBE ASSY -	1	-
16	532003645	BUSHING -	2	-
17	590209101	GROMMET -	2	-
18	584648201	GROMMET -	2	-
19	582481502	BRACKET -	2	-
20	582481602	BRACKET -	2	-
20	525865403	TUBE ASSY -	1	-
21	582483401	COVER -	1	-
22	539912222	CLAMP -	6	-
23	575436501	CLAMP -	6	-
24	582482601	CLIP -	8	-
25	505280001	TIE WRAP -	5	-
26	874490548	BOLT -	6	-
27	582482401	COVER -	1	-
27	590257301	SCREW -	6	-
28	817490516	SCREW -	6	-
29	582484201	SCREW -	8	-

Ref.	Article N.	Description	Qty	Kit
30	539112899	NUT, 5/16-18, NYLOC -	20	-
31	532126684	SHIM -	6	-
1	591359901	SHIELD -	1	-
2	582461206	BRACKET -	1	-
3	539102587	ABSORBER -	4	-
4	582461701	HOLDER ASSY -	3	-
5	582461303	ROD -	2	-
6	874780412	BOLT -	3	-
7	874490548	BOLT -	4	-
8	503200001	SCREW EHHFM -	3	-
9	587592101	SCREW -	4	-
10	521991101	NUT -	2	-
11	539112899	NUT, 5/16-18, NYLOC -	8	-
12	532191730	NUT -	3	-
13	731231405	HEXAGON NUT -	3	-
14	873350800	NUT -	2	-
1	582463102	ARM -	1	-
2	501603701	BEARING -	2	-
3	582479102	BRACKET -	4	-
4	582480101	CLAMP -	4	-
5	529311401	FITTING -	2	-
6	582479404	FRAME	1	-

Ref.	Article N.	Description	Qty	Kit
		-		
7	582480204	HOSE -	2	-
8	586933802	MOUNT -	1	-
9	582468101	SHAFT -	1	-
10	587654101	PULLEY -	2	-
11	582716201	ROD END -	1	-
12	582468401	SPRING -	1	-
13	574499201	TANK -	2	-
14	582480001	TRANSMISSION -	1	-
15	582480002	TRANSMISSION -	1	-
16	576127201	FILTER -	1	-
17	582480402	V-BELT -	1	-
18	874490652	SCREW -	1	-
19	574210601	SCREW -	8	-
20	525828901	BOLT *For 96767860300, 96767860200, 96767860101*	8	-
20	874490848	SCREW *For 967930101-00, 967678701-00, 967678601-00*	8	-
21	539100145	BOLT -	2	-
22	539990645	BOLT -	2	-
23	532165857	SCREW -	4	-
24	539913847	BOLT -	1	-
25	521991101	NUT -	8	-
26	521996501	NUT -	6	-

Ref.	Article N.	Description	Qty	Kit
27	819133210	WASHER -	1	-
1	591359704	CUTTING DECK -	1	-
2	588264805	DRIVE BELT -	1	-
3	575265901	BLADE -	3	-
4	582462702	ARM -	1	-
5	521979701	PULLEY -	3	-
6	510015101	PULLEY -	3	-
7	582463003	PULLEY -	1	-
8	582463006	PULLEY -	1	-
9	582468801	CHUTE -	1	-
10	510254501	SHIELD -	3	-
11	574169601	ROLLER -	4	-
12	574196401	TUBE -	2	-
13	574196501	TUBE -	1	-
14	539131518	BEARING -	2	-
15	510263701	BEARING -	2	-
16	582467302	BRACKET -	1	-
17	582463203	BRACKET *For 96767860300, 96767860200, 96767860101, 967678701-00, 967678601-00*	1	-
17	582463207	BRACKET *For 967930101-00*	1	-
18	582463204	BRACKET *For 96767860300, 96767860200, 96767860101, 967678701-00, 967678601-00*	1	-
18	582463208	BRACKET *For 967930101-00*	1	-
19	582472502	BELT GUARD	1	-

Ref.	Article N.	Description	Qty	Kit
		For 96767860300, 96767860200, 96767860101, 967678701-00, 967678601-00		
19	594913302	BELT GUIDE *For 967930101-00*	1	-
20	582470201	KEEPER -	1	-
21	539104411	KNOB -	2	-
22	590523702	PLATE -	1	-
23	582466401	PLATE -	1	-
24	582468101	SHAFT -	1	-
25	582468301	SPACER -	1	-
26	589455201	SPACER -	1	-
27	582468001	SPRING -	1	-
28	510437502	BAFFLE -	1	-
29	539104763	CLIP -	2	-
30	539115620	1/4-20X3/4 CARR BLT -	4	-
31	872140610	BOLT -	3	-
32	510022301	SCREW -	2	-
33	872140628	BOLT -	2	-
34	872140864	BOLT -	1	-
35	874490644	BOLT -	2	-
36	574210601	SCREW -	18	-
37	525612801	SCREW -	2	-
38	521996601	SCREW -	1	-
39	582476401	SCREW -	4	-

Ref.	Article N.	Description	Qty	Kit
40	539130315	BOLT -	9	-
41	539119007	SCREW -	3	-
42	574202001	BOLT -	1	-
43	539913847	BOLT -	1	-
44	521996501	NUT -	10	-
45	539112899	NUT, 5/16-18, NYLOC -	4	-
46	521991101	NUT -	3	-
47	539109332	NUT -	1	-
48	539976978	NUT -	4	-
49	539106504	WASHER -	2	-
50	539109600	WASHER -	9	-
1	582462602	SHAFT -	1	-
2	592654001	ARM -	1	-
2	592654002	ARM -	1	-
3	582465402	ARM -	2	-
4	582463902	ARM -	2	-
5	582462001	ARM -	1	-
6	582462002	ARM -	1	-
7	582464601	ROD -	2	-
8	582472801	ROD -	1	-
9	582471401	ROD -	1	-
10	510408301	PEDAL	1	-

Ref.	Article N.	Description	Qty	Kit
		-		
11	510089501	PAD -	1	-
12	510023902	BLOCK -	4	-
13	582467201	BLOCK -	1	-
14	582466902	BRACKET -	1	-
15	582468902	BRACKET -	2	-
16	589454103	LEVER -	1	-
17	592654101	LEVER -	1	-
18	539109693	LIFT CHAIN - 3 LINK -	2	-
18	589454104	LEVER -	1	-
19	539102641	CHAIN -	2	-
20	582464801	PIVOT -	2	-
21	582763902	PLATE -	1	-
22	589453201	LEVER ASSY -	1	-
23	582469001	SHACKLE -	2	-
24	582464201	SHAFT -	2	-
25	593091801	SPRING -	2	-
26	582471301	SPRING -	1	-
27	582467001	SWIVEL -	1	-
28	582467101	SWIVEL -	1	-
29	582469901	BUSHING -	2	-
30	582469801	BUSHING -	2	-

Ref.	Article N.	Description	Qty	Kit
31	510089201	BUSHING -	5	-
32	539912730	RING -	1	-
33	539990870	RING -	2	-
34	590465501	PIN -	1	-
35	539102889	SPLIT PIN -	2	-
36	582466701	SCREW -	4	-
37	582472601	SCREW -	2	-
38	574202001	BOLT -	2	-
39	539990580	SCREW -	1	-
40	589786001	SCREW -	4	-
41	501064102	SCREW -	3	-
42	501064101	SCREW -	4	-
43	510408201	BOLT -	1	-
44	539101175	SCREW -	4	-
45	582465601	SCREW -	2	-
46	589677701	NUT -	3	-
47	539976978	NUT -	1	-
48	539990546	NUT -	2	-
49	539119124	NUT -	4	-
50	539110340	NUT -	3	-
51	521996501	NUT -	6	-
52	539112899	NUT, 5/16-18, NYLOC	2	-

Ref.	Article N.	Description	Qty	Kit
		-		
53	539132019	NUT -	4	-
54	582466601	NUT -	4	-
55	539108732	NUT 3/8-24 HEX JAM ZD -	2	-
56	539991043	BUSHING -	2	-
1	579866104	SEAT ASSY -	1	-
1	582460103	SEAT *Fits 97058500100*	1	-
2	582478801	BAR -	1	-
3	582478201	BRACKET -	2	-
4	590555002	BRACKET -	1	-
5	590481801	ISOLATOR -	8	-
6	539116377	INSERT -	4	-
7	590373501	LATCH -	1	-
8	590506802	PLATE -	1	-
9	590507201	ROD -	1	-
10	539113952	SPRING -	2	-
11	582478101	NUT -	4	-
12	532192749	SWITCH -	1	-
13	539108392	HCS 5/16-18 X 5/8 GR 5 ZD -	4	-
14	582478901	SCREW -	2	-
15	582478501	SCREW -	2	-
16	539990316	BOLT -	8	-

Ref.	Article N.	Description	Qty	Kit
17	582478601	NUT -	2	-
18	539913847	BOLT -	1	-
19	539112899	NUT, 5/16-18, NYLOC -	6	-
20	522023401	WASHER -	2	-
21	532413524	WASHER -	8	-
22	539990118	WASHER -	2	-
23	539990187	WASHER -	4	-
24	579866109	SEAT ASSY *Knob*	1	-
25	579866108	SEAT ASSY *REPLACEMENT PAD ONLY*	2	-
1	580942201	HUB -	3	-
2	580942101	SHAFT -	3	-
3	580942701	V-RING -	6	-
4	580942601	SEAL -	6	-
5	583911101	BEARING KIT *ALSO ORDER TOOL KIT*	3	-
6	580942301	SPACER -	3	-
7	580942501	CARRIER -	3	-
8	539976998	NIPPLE -	3	-
9	539977326	FITTING -	3	-
10	539130653	NUT -	3	-
11	580943306	SPINDLE -	3	-
12	580942801	SHIM *For 967678601-00, 967678701-00*	1	-
13	574754201	KIT	1	-

Ref.	Article N.	Description	Qty	Kit
		NOT SHOWN		
1	582475501	LEVER *LEFT*	1	-
2	582475502	LEVER *RIGHT*	1	-
3	596925601	ROD *RIGHT SIDE ASSY*	1	-
3	596925701	ROD *LEFT SIDE ASSY*	1	-
3	598852501	SERVICE KIT *COUPLER KIT. CONTAINS (2) COUPLERS THAT FITS BOTH LH/RH SIDES. REF # 4 SCREWS INTO THIS COUPLER*	1	-
4	588692502	ROD *ROD.END.MALE.LH THREAD*	2	-
5	579764601	JOINT *JOINT.RH.THREAD.FEMALE.5/16*	2	-
6	539923515	SPACER	2	-
7	597744702	BRACKET	2	-
8	592653801	CARRIER *w/BEARINGS LEFT*	1	-
8	592653802	CARRIER *w/BEARINGS RIGHT*	1	-
9	592653901	CARRIER	2	-
12	582477802	BRACKET *LEFT*	1	-
12	582477804	BRACKET *RIGHT*	1	-
13	582476902	BRACKET	2	-
14	582475102	BRACKET	4	-
15	587225301	PIN	2	-
16	582551901	CLIP	2	-
17	588775401	DAMPER	2	-
18	582477401	PIN	2	-
19	589505102	PIVOT	2	-
20	589489601	RETAINER	2	-
21	589500902	SWITCH	2	-
22	582475001	SPACER	2	-
23	582711303	SPACER	2	-
24	582477001	SPRING	4	-
25	532151332	SPRING	2	-
26	582477702	SPRING	2	-

Ref.	Article N.	Description	Qty	Kit
27	597744501	ADAPTER	2	-
28	582477501	CABLE	2	-
29	539110607	STUD	4	-
30	582477602	BRACKET	2	-
31	582476801	BEARING	4	-
32	539131518	BEARING	8	-
33	532170165	BOLT	4	-
34	525544001	BOLT	4	-
35	525465402	SCREW	2	-
36	539976934	SCREW	4	-
37	582477102	SCREW	4	-
38	582476401	SCREW	4	-
39	596240801	BOLT	2	-
40	595901501	BOLT	4	-
41	577117701	SCREW	2	-
42	589505602	SCREW	2	-
44	594944401	NUT	14	-
45	596040901	HEXAGON NUT	4	-
46	521996502	NUT	6	-
47	539990184	NUT	4	-
48	596134901	WASHER	2	-
49	539990187	WASHER	4	-
50	596204101	WASHER	2	-
51	522023401	WASHER	4	-
1	582475501	LEVER -	1	-
2	582475502	LEVER -	1	-
3	501567001	ROD *For 967930101-00*	1	-
3	592653701	CONTROL *LEFT For 96767860300, 96767860200, 96767860101, 967678701. 967678601*	1	-
3	592653702	CONTROL *RIGHT*	1	-
4	588692502	ROD -	2	-
5	579764601	JOINT -	2	-
6	582484001	BELLOWS *For 967930101-00*	1	-

Ref.	Article N.	Description	Qty	Kit
6	591193301	SERVICE KIT *For 96767860300, 96767860200, 96767860101, 967678701-00, 967678601-00*	1	-
7	582484101	BELLOWS *For 967930101-00*	1	-
7	591193302	SERVICE KIT *For 96767860300, 96767860200, 96767860101, 967678701-00, 967678601-00*	1	-
8	592653801	CARRIER *w/BEARINGS LEFT/ For 96767860300, 96767860200, 96767860101, 967678701-00, 967678601-00*	1	-
8	592653802	CARRIER *w/BEARINGS LEFT/ For 967930101-00*	1	-
9	592653901	CARRIER -	2	-
10	592724002	CONTROL -	1	-
10	592724001	CONTROL -	1	-
11	592653501	PARKING BRAKE -	1	-
12	582477802	BRACKET *LEFT*	1	-
12	582477804	BRACKET *RIGHT*	1	-
13	582476901	BRACKET -	2	-
14	582475102	BRACKET -	4	-
15	587225301	PIN -	2	-
16	582551901	CLIP -	2	-
17	588775401	DAMPER -	2	-
18	582477401	PIN -	2	-
19	589505101	PIVOT -	2	-
20	589489601	RETAINER -	2	-
21	589500901	SWITCH -	2	-
22	582475001	SPACER -	2	-

Ref.	Article N.	Description	Qty	Kit
23	582711303	SPACER -	2	-
24	582477001	SPRING -	4	-
25	532151332	SPRING -	2	-
26	582477701	SPRING -	2	-
27	582477201	YOKE -	2	-
28	582477501	CABLE -	2	-
29	539110607	STUD -	4	-
30	582477601	BRACKET -	2	-
31	582476801	BEARING -	4	-
32	539131518	BEARING -	8	-
33	539110303	BOLT -	4	-
34	525544001	BOLT -	4	-
35	525465401	SCREW -	2	-
36	539976934	SCREW -	4	-
37	582477101	SCREW -	4	-
38	582476401	SCREW -	2	-
39	539115574	EYE BOLT -	2	-
40	539990208	SCREW -	4	-
41	577117701	SCREW -	6	-
42	589505601	SCREW -	2	-
43	582482901	RIVET -	12	-
44	539112899	NUT, 5/16-18, NYLOC	14	-

Ref.	Article N.	Description	Qty	Kit
		-		
45	539990223	NUT -	4	-
46	521996501	NUT -	6	-
47	539990184	NUT -	4	-
48	539990692	WASHER -	2	-
49	539990187	WASHER -	4	-
50	819111116	WASHER -	2	-
51	522023401	WASHER -	2	-
1	599893003	COVER -	1	-
2	599893004	COVER -	1	-
3	596564002	BOLT -	4	-
1	599156701	TIRE *fits 967669801-00, 967699802-00*	2	-
1	510154601	TIRE *Use From SN: 060117F000001 To SN: 090820F999999*	2	-
2	539105152	TIRE *24x12-12 Tire Only*	2	-
2	510154502	WHEEL RIM *Rim Only*	2	-
2	510154501	TIRE *Tire & Rim Assembly*	2	-
3	525611902	FORK -	2	-
4	510034001	CAP -	2	-
5	510034301	SEAL -	2	-
6	510034403	BEARING -	4	-
7	596623501	VALVE -	2	-
8	590690701	SPACER *Use From SN: 060117F000001 To SN: 090820F999999*	4	-

Ref.	Article N.	Description	Qty	Kit
9	590704902	SPACER *Use From SN: 060117F000001 To SN: 090820F999999*	2	-
10	594946501	BOLT -	2	-
11	522842602	NUT -	2	-
12	587653902	NUT -	8	-
13	873930800	NUT *For 967678802-01, 967678801-01*	2	-
13	521991102	NUT *For 96793040300, 967669703-01*	2	-
14	595086801	WASHER -	2	-
15	574824701	WASHER -	2	-
16	539102484	BEARING *Use after SN: 090920F000001*	4	-
17	539105307	ROLLER BEARING *Use after SN: 090920F000001*	4	-
18	539912234	VALVE *Use after SN: 090920F000001*	2	-
19	599405101	SHIM *Use after SN: 090920F000001*	2	-
20	539133007	WASHER *Use after SN: 090920F000001*	2	-
21	539105522	TIRE *13X6.5-6 Tire Only Use After SN: 090920F000001*	2	-
21	581199501	WHEEL ASSY *Use after SN: 090920F000001*	2	-
22	575334901	SPACER *Use after SN: 090920F000001*	2	-
23	596623501	VALVE -	2	-
24	597383801	SERVICE KIT *Use From SN: 060117F000001 To SN: 090820F999999*	2	-
1	597383801	SERVICE KIT -	1	-
1	510154601	TIRE -	2	-
2	522905101	TIRE -	2	-
3	525611902	FORK	2	-

Ref.	Article N.	Description	Qty	Kit
		-		
4	510034001	CAP -	2	-
4	522905102	TIRE -	2	-
5	510034301	SEAL -	2	-
6	510034403	BEARING -	4	-
7	539101474	NIPPLE -	2	-
8	590690701	SPACER -	4	-
9	590704901	SPACER -	2	-
10	539105517	BOLT -	2	-
11	522842601	NUT -	2	-
12	587653902	NUT -	8	-
13	873930800	NUT -	2	-
14	539990250	WASHER -	2	-
15	574824701	WASHER -	2	-
1	591359801	FRAME *w/ SAFETY DECALS*	1	-
2	522675702	BUMPER -	1	-
3	587898002	GUARD -	1	-
4	589808802	BRACKET -	2	-
5	589807202	BRACKET -	1	-
6	589448202	BRACKET -	1	-
7	589448204	BRACKET -	1	-
8	582481101	BRACKET -	2	-

Ref.	Article N.	Description	Qty	Kit
9	582481002	PANEL *For 96767860300, 96767860200, 96767860101, 967678701-00, 967678601-00*	1	-
9	595327502	PANEL *For 967930101-00*	1	-
10	582481004	PANEL -	1	-
11	582480803	PANEL -	1	-
12	582480804	PANEL -	1	-
13	589304602	PLATE -	1	-
14	574228602	PLATE *For 96767860300, 96767860200, 96767860101, 967678701-00, 967678601-00*	1	-
14	596694102	PLATE *For 967930101-00*	1	-
15	582478701	BUMPER -	2	-
16	575811501	BUMPER -	2	-
17	522801401	BUMPER -	4	-
18	539102587	ABSORBER -	2	-
19	589745202	COVER -	1	-
20	582480502	CROSS MEMBER -	1	-
21	589744001	ISOLATOR -	2	-
22	539104411	KNOB -	1	-
23	591344501	KNOB -	2	-
24	591101701	PIN -	2	-
25	591101601	PIN -	2	-
26	582460702	PLATE -	1	-
27	582460606	BRACKET *MX-14*	1	-
28	589500701	BRACKET	1	-

Ref.	Article N.	Description	Qty	Kit
		-		
29	539104763	CLIP -	7	-
30	589806801	NUT -	2	-
31	539111028	NUTSERT 5/16-18 THICK GRIP -	2	-
32	525612801	SCREW -	4	-
33	574233801	SCREW -	2	-
34	525544001	BOLT -	2	-
35	539113226	BOLT -	4	-
36	577117701	SCREW -	4	-
37	539100145	BOLT -	2	-
38	872140404	BOLT -	4	-
39	872140406	BOLT *For 96767860300, 96767860200, 96767860101, 967678701-00, 967678601-00*	2	-
39	539115620	1/4-20X3/4 CARR BLT *For 967930101-00*	2	-
40	539990316	BOLT -	14	-
41	539990208	SCREW -	2	-
42	539110303	BOLT -	4	-
43	580754601	BOLT -	6	-
44	589797201	SCREW -	2	-
45	817490408	SCREW -	2	-
46	585986101	BOLT -	2	-
47	525829101	NUT -	6	-
48	539976978	NUT -	6	-

Ref.	Article N.	Description	Qty	Kit
49	521996501	NUT -	12	-
50	539112899	NUT, 5/16-18, NYLOC -	21	-
51	539102653	WASHER -	4	-
52	539108120	NUT *For 967930101-00*	1	-
53	583611601	BOLT *For 967930101-00*	1	-
54	591176601	BOLT *For 967930101-00*	1	-
58	590877803	ROPS *ROPS ASSY*	1	-

FUEL SYSTEM

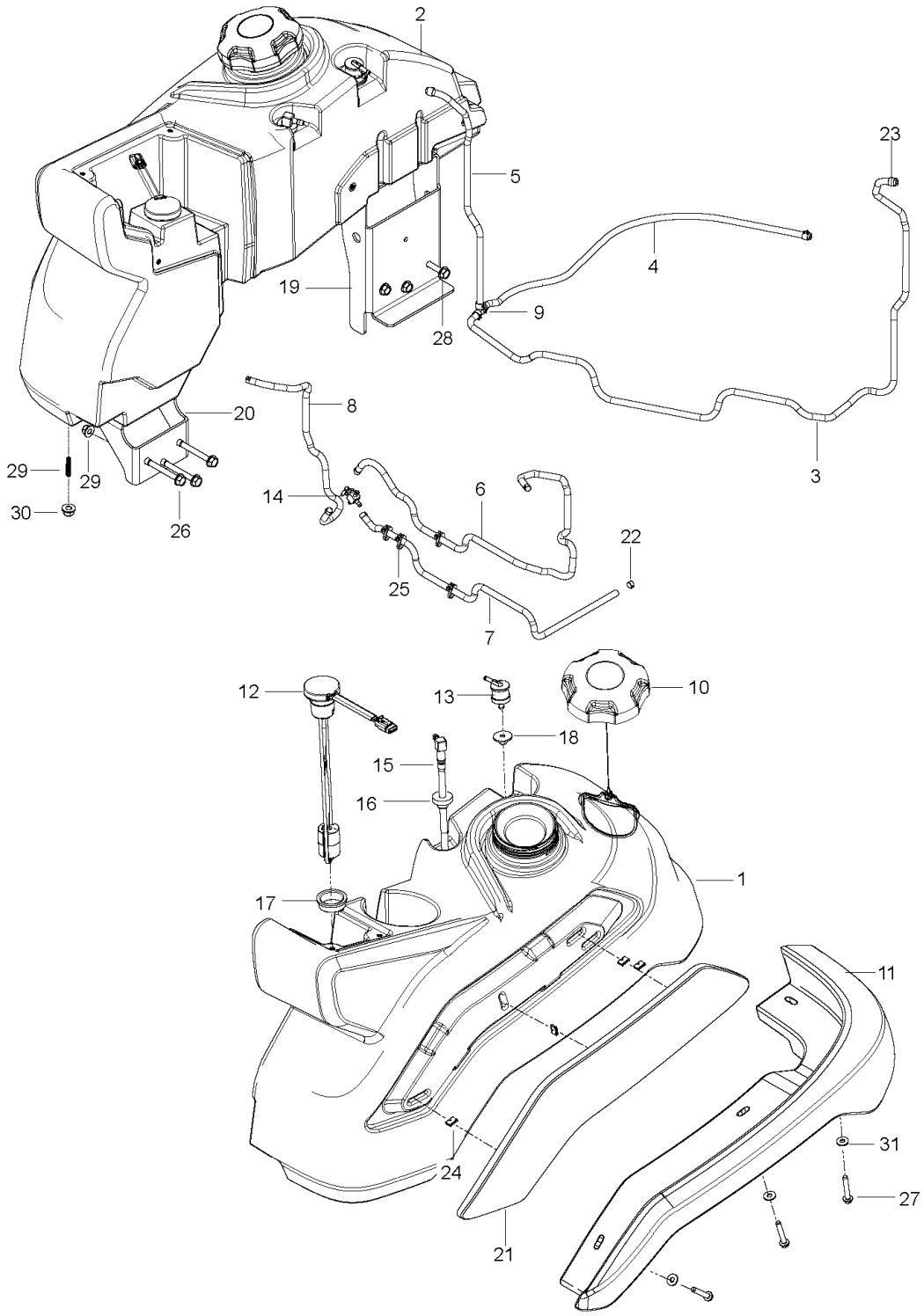

Ref.	Article N.	Description	Qty	Kit
1	582483902	PANEL	1	-
2	582483602	PANEL	1	-
3	586161801	HOUR METER	1	-
4	574455401	SWITCH	1	-
5	589887201	SWITCH	1	-

Ref.	Article N.	Description	Qty	Kit
6	574455501	KEY	1	-
7	581878301	LIGHT *For 967930101-00, 967678701-00*	1	-
7	574206901	CABLE *CHOKE/ For 96767860300, 96767860200, 96767860101*	1	-
8	582120301	THROTTLE CONTROL *46*	1	-
9	589819501	BATTERY *MX-9/ For 967930101-00, 967678701-00, 967678601-00*	1	-
9	589819502	BATTERY *MX-12/ For 967930101-00, 967678701-00, 967678601-00*	1	-
9	589819503	BATTERY *MX-14/ For 96767860300, 96767860200, 96767860101*	1	-
9	582460606	BRACKET *MX-14*	1	-
9	596990201	SERVICE KIT *MX-12 Bracket (Battery not included) For 967930101-00, 967678701-00, 967678601-00*	1	-
10	539103178	NUT CAP	1	-
11	539132624	KNOB	1	-
12	539102759	INSULATOR	2	-
13	592872701	FUEL GAUGE	2	-
14	539114341	SCREW	6	-
15	532199855	SCREW	2	-
16	582460801	SCREW	2	-
21	593777801	HARNESS *FOR CARB ENGINES*	1	-
21	593777803	HARNESS *FOR KOHLER & YAMAHA EFI*	1	-
22	589838501	HARNESS	1	-
23	574514001	TIMER *NOT SHOWN*	1	-
24	590632101	CABLE *NOT SHOWN*	1	-
25	539101714	SOLENOID *NOT SHOWN (SOLENOID KAW FX)*	1	-
1	574437301	DECAL *BELT ROUTING*	1	-
2	590209401	DECAL *MOTION/BRAKE RIGHT*	1	-
3	590209501	DECAL *MOTION_BRAKE_LEFT*	1	-

Ref.	Article N.	Description	Qty	Kit
3	590807601	DECAL *Z554X*	1	-
4	581724301	DECAL *NO STEP*	2	-
5	539105745	DECAL *BATTERY WARNING*	1	-
6	539105744	DECAL *DANGER BELT*	2	-
7	581724401	DECAL *DEFLECTOR WARNING*	1	-
8	532424102	DECAL *SPARK ARRESTOR*	1	-
9	574455001	DECAL *CROWN LARGE*	1	-
10	574569006	DECAL *ROPS/ For 96767860300, 96767860200,*	1	-
10	593011101	DECAL *ROPS/ For 967930101-00, 967678701-00, 967678601-00*	1	-
11	574569002	DECAL *ROPS WARNING*	1	-
12	574569401	DECAL *FUSE*	1	-
13	584904601	DECAL *DECK/DEFLECT WARNING*	1	-
14	532428676	DECAL *CROWN SMALL*	1	-
15	590799301	DECAL *DECK HEIGHT*	1	-
16	590210001	DECAL *COMMERCIAL*	1	-
17	590846801	DECAL *MAINTANCE/SERVICE*	1	-
18	590210301	DECAL *CONTROL PANEL RIGHT - CHOKE /For 96767860300, 96767860200, 96767860101*	1	-
18	590210302	DECAL *CONTROL PANEL RIGHT-EFI/ For 967930101-00, 967678701-00, 967678601-00*	1	-
19	590210501	DECAL *CONTROL PANEL LEFT*	1	-
20	590209701	DECAL *TRANSMISSION WARNING*	1	-
21	590209202	DECAL	1	-

Ref.	Article N.	Description	Qty	Kit
		START W/ CHOKE		
22	577469001	DECAL *EMBLEM*	2	-
30	577150101	DECAL *FUEL - NOT SHOWN*	1	-
31	590807801	DECAL *Z560X / For 967678601-00, 967678701-00*	1	-
32	590807901	DECAL *Z572X / For 967678601-00, 967678701-00*	1	-
1	582733302	PLATE -	1	-
2	525749501	CLUTCH -	1	-
3	522676702	STOP -	1	-
4	539118911	NIPPLE -	1	-
5	522837001	PLUG -	1	-
6	510019801	PULLEY -	1	-
7	539119680	ADAPTER -	1	-
8	539105072	90DEG.ELBOW 3/8NPT -	1	-
9	525749901	KEY -	1	-
10	587886001	MUFFLER -	1	-
11	539109618	O-RING -	1	-
12	505280001	TIE WRAP -	1	-
13	581332801	BOLT -	1	-
14	574233801	SCREW -	4	-
15	539990563	SCREW -	4	-
16	874780716	BOLT -	1	-
17	539990208	SCREW -	2	-

Ref.	Article N.	Description	Qty	Kit
18	539102933	SCREW -	2	-
19	539108120	NUT -	1	-
20	539112899	NUT, 5/16-18, NYLOC -	8	-
21	539102582	NUT -	1	-
22	539102593	WASHER -	4	-
23	539990247	WASHER -	1	-
24	539125626	WASHER -	1	-
25	586839701	GASKET *NOT SHOWN*	2	-
1	582483105	FUEL TANK ASSY *For 96767860300, 96767860200, 96767860101, 967678701-00, 967678601-00*	1	-
1	590680505	TANK UNIT ASSY *For 967930101-00*	1	-
2	582481705	FUEL TANK ASSY *For 96767860300, 96767860200, 96767860101, 967678701-00, 967678601-00*	1	-
2	590680405	TANK UNIT ASSY *For 967930101-00*	1	-
3	587044550	HOSE -	1	-
4	587044526	HOSE -	1	-
5	587044517	HOSE -	1	-
6	587044846	HOSE -	1	-
7	587044808	HOSE *For 967930101-00*	1	-
7	587044833	HOSE *For 96767860300, 96767860200, 96767860101, 967678701-00, 967678601-00*	1	-
8	587044824	HOSE -	1	-
9	574206602	FITTING -	1	-
10	575018101	CAP -	2	-
11	582483301	GUARD	1	-

Ref.	Article N.	Description	Qty	Kit
		-		
12	590638801	SENSOR -	2	-
13	576618101	TANK VENT -	2	-
14	539102679	VALVE -	1	-
15	582482301	GUARD -	1	-
15	525865402	TUBE ASSY -	1	-
16	532003645	BUSHING -	2	-
17	590209101	GROMMET -	2	-
18	584648201	GROMMET -	2	-
19	582481502	BRACKET -	2	-
20	582481602	BRACKET -	2	-
20	525865403	TUBE ASSY -	1	-
21	582483401	COVER -	1	-
22	539912222	CLAMP -	6	-
23	575436501	CLAMP -	6	-
24	582482601	CLIP -	8	-
25	505280001	TIE WRAP -	5	-
26	874490548	BOLT -	6	-
27	582482401	COVER -	1	-
27	590257301	SCREW -	6	-
28	817490516	SCREW -	6	-
29	582484201	SCREW -	8	-

Ref.	Article N.	Description	Qty	Kit
30	539112899	NUT, 5/16-18, NYLOC -	20	-
31	532126684	SHIM -	6	-
1	591359901	SHIELD -	1	-
2	582461206	BRACKET -	1	-
3	539102587	ABSORBER -	4	-
4	582461701	HOLDER ASSY -	3	-
5	582461303	ROD -	2	-
6	874780412	BOLT -	3	-
7	874490548	BOLT -	4	-
8	503200001	SCREW EHHFM -	3	-
9	587592101	SCREW -	4	-
10	521991101	NUT -	2	-
11	539112899	NUT, 5/16-18, NYLOC -	8	-
12	532191730	NUT -	3	-
13	731231405	HEXAGON NUT -	3	-
14	873350800	NUT -	2	-
1	582463102	ARM -	1	-
2	501603701	BEARING -	2	-
3	582479102	BRACKET -	4	-
4	582480101	CLAMP -	4	-
5	529311401	FITTING -	2	-
6	582479404	FRAME	1	-

Ref.	Article N.	Description	Qty	Kit
		-		
7	582480204	HOSE -	2	-
8	586933802	MOUNT -	1	-
9	582468101	SHAFT -	1	-
10	587654101	PULLEY -	2	-
11	582716201	ROD END -	1	-
12	582468401	SPRING -	1	-
13	574499201	TANK -	2	-
14	582480001	TRANSMISSION -	1	-
15	582480002	TRANSMISSION -	1	-
16	576127201	FILTER -	1	-
17	582480402	V-BELT -	1	-
18	874490652	SCREW -	1	-
19	574210601	SCREW -	8	-
20	525828901	BOLT *For 96767860300, 96767860200, 96767860101*	8	-
20	874490848	SCREW *For 967930101-00, 967678701-00, 967678601-00*	8	-
21	539100145	BOLT -	2	-
22	539990645	BOLT -	2	-
23	532165857	SCREW -	4	-
24	539913847	BOLT -	1	-
25	521991101	NUT -	8	-
26	521996501	NUT -	6	-

Ref.	Article N.	Description	Qty	Kit
27	819133210	WASHER -	1	-
1	591359704	CUTTING DECK -	1	-
2	588264805	DRIVE BELT -	1	-
3	575265901	BLADE -	3	-
4	582462702	ARM -	1	-
5	521979701	PULLEY -	3	-
6	510015101	PULLEY -	3	-
7	582463003	PULLEY -	1	-
8	582463006	PULLEY -	1	-
9	582468801	CHUTE -	1	-
10	510254501	SHIELD -	3	-
11	574169601	ROLLER -	4	-
12	574196401	TUBE -	2	-
13	574196501	TUBE -	1	-
14	539131518	BEARING -	2	-
15	510263701	BEARING -	2	-
16	582467302	BRACKET -	1	-
17	582463203	BRACKET *For 96767860300, 96767860200, 96767860101, 967678701-00, 967678601-00*	1	-
17	582463207	BRACKET *For 967930101-00*	1	-
18	582463204	BRACKET *For 96767860300, 96767860200, 96767860101, 967678701-00, 967678601-00*	1	-
18	582463208	BRACKET *For 967930101-00*	1	-
19	582472502	BELT GUARD	1	-

Ref.	Article N.	Description	Qty	Kit
		For 96767860300, 96767860200, 96767860101, 967678701-00, 967678601-00		
19	594913302	BELT GUIDE *For 967930101-00*	1	-
20	582470201	KEEPER -	1	-
21	539104411	KNOB -	2	-
22	590523702	PLATE -	1	-
23	582466401	PLATE -	1	-
24	582468101	SHAFT -	1	-
25	582468301	SPACER -	1	-
26	589455201	SPACER -	1	-
27	582468001	SPRING -	1	-
28	510437502	BAFFLE -	1	-
29	539104763	CLIP -	2	-
30	539115620	1/4-20X3/4 CARR BLT -	4	-
31	872140610	BOLT -	3	-
32	510022301	SCREW -	2	-
33	872140628	BOLT -	2	-
34	872140864	BOLT -	1	-
35	874490644	BOLT -	2	-
36	574210601	SCREW -	18	-
37	525612801	SCREW -	2	-
38	521996601	SCREW -	1	-
39	582476401	SCREW -	4	-

Ref.	Article N.	Description	Qty	Kit
40	539130315	BOLT -	9	-
41	539119007	SCREW -	3	-
42	574202001	BOLT -	1	-
43	539913847	BOLT -	1	-
44	521996501	NUT -	10	-
45	539112899	NUT, 5/16-18, NYLOC -	4	-
46	521991101	NUT -	3	-
47	539109332	NUT -	1	-
48	539976978	NUT -	4	-
49	539106504	WASHER -	2	-
50	539109600	WASHER -	9	-
1	582462602	SHAFT -	1	-
2	592654001	ARM -	1	-
2	592654002	ARM -	1	-
3	582465402	ARM -	2	-
4	582463902	ARM -	2	-
5	582462001	ARM -	1	-
6	582462002	ARM -	1	-
7	582464601	ROD -	2	-
8	582472801	ROD -	1	-
9	582471401	ROD -	1	-
10	510408301	PEDAL	1	-

Ref.	Article N.	Description	Qty	Kit
		-		
11	510089501	PAD -	1	-
12	510023902	BLOCK -	4	-
13	582467201	BLOCK -	1	-
14	582466902	BRACKET -	1	-
15	582468902	BRACKET -	2	-
16	589454103	LEVER -	1	-
17	592654101	LEVER -	1	-
18	539109693	LIFT CHAIN - 3 LINK -	2	-
18	589454104	LEVER -	1	-
19	539102641	CHAIN -	2	-
20	582464801	PIVOT -	2	-
21	582763902	PLATE -	1	-
22	589453201	LEVER ASSY -	1	-
23	582469001	SHACKLE -	2	-
24	582464201	SHAFT -	2	-
25	593091801	SPRING -	2	-
26	582471301	SPRING -	1	-
27	582467001	SWIVEL -	1	-
28	582467101	SWIVEL -	1	-
29	582469901	BUSHING -	2	-
30	582469801	BUSHING -	2	-

Ref.	Article N.	Description	Qty	Kit
31	510089201	BUSHING -	5	-
32	539912730	RING -	1	-
33	539990870	RING -	2	-
34	590465501	PIN -	1	-
35	539102889	SPLIT PIN -	2	-
36	582466701	SCREW -	4	-
37	582472601	SCREW -	2	-
38	574202001	BOLT -	2	-
39	539990580	SCREW -	1	-
40	589786001	SCREW -	4	-
41	501064102	SCREW -	3	-
42	501064101	SCREW -	4	-
43	510408201	BOLT -	1	-
44	539101175	SCREW -	4	-
45	582465601	SCREW -	2	-
46	589677701	NUT -	3	-
47	539976978	NUT -	1	-
48	539990546	NUT -	2	-
49	539119124	NUT -	4	-
50	539110340	NUT -	3	-
51	521996501	NUT -	6	-
52	539112899	NUT, 5/16-18, NYLOC	2	-

Ref.	Article N.	Description	Qty	Kit
		-		
53	539132019	NUT -	4	-
54	582466601	NUT -	4	-
55	539108732	NUT 3/8-24 HEX JAM ZD -	2	-
56	539991043	BUSHING -	2	-
1	579866104	SEAT ASSY -	1	-
1	582460103	SEAT *Fits 97058500100*	1	-
2	582478801	BAR -	1	-
3	582478201	BRACKET -	2	-
4	590555002	BRACKET -	1	-
5	590481801	ISOLATOR -	8	-
6	539116377	INSERT -	4	-
7	590373501	LATCH -	1	-
8	590506802	PLATE -	1	-
9	590507201	ROD -	1	-
10	539113952	SPRING -	2	-
11	582478101	NUT -	4	-
12	532192749	SWITCH -	1	-
13	539108392	HCS 5/16-18 X 5/8 GR 5 ZD -	4	-
14	582478901	SCREW -	2	-
15	582478501	SCREW -	2	-
16	539990316	BOLT -	8	-

Ref.	Article N.	Description	Qty	Kit
17	582478601	NUT -	2	-
18	539913847	BOLT -	1	-
19	539112899	NUT, 5/16-18, NYLOC -	6	-
20	522023401	WASHER -	2	-
21	532413524	WASHER -	8	-
22	539990118	WASHER -	2	-
23	539990187	WASHER -	4	-
24	579866109	SEAT ASSY *Knob*	1	-
25	579866108	SEAT ASSY *REPLACEMENT PAD ONLY*	2	-
1	580942201	HUB -	3	-
2	580942101	SHAFT -	3	-
3	580942701	V-RING -	6	-
4	580942601	SEAL -	6	-
5	583911101	BEARING KIT *ALSO ORDER TOOL KIT*	3	-
6	580942301	SPACER -	3	-
7	580942501	CARRIER -	3	-
8	539976998	NIPPLE -	3	-
9	539977326	FITTING -	3	-
10	539130653	NUT -	3	-
11	580943306	SPINDLE -	3	-
12	580942801	SHIM *For 967678601-00, 967678701-00*	1	-
13	574754201	KIT	1	-

Ref.	Article N.	Description	Qty	Kit
		NOT SHOWN		
1	582475501	LEVER *LEFT*	1	-
2	582475502	LEVER *RIGHT*	1	-
3	596925601	ROD *RIGHT SIDE ASSY*	1	-
3	596925701	ROD *LEFT SIDE ASSY*	1	-
3	598852501	SERVICE KIT *COUPLER KIT. CONTAINS (2) COUPLERS THAT FITS BOTH LH/RH SIDES. REF # 4 SCREWS INTO THIS COUPLER*	1	-
4	588692502	ROD *ROD.END.MALE.LH THREAD*	2	-
5	579764601	JOINT *JOINT.RH.THREAD.FEMALE.5/16*	2	-
6	539923515	SPACER	2	-
7	597744702	BRACKET	2	-
8	592653801	CARRIER *w/BEARINGS LEFT*	1	-
8	592653802	CARRIER *w/BEARINGS RIGHT*	1	-
9	592653901	CARRIER	2	-
12	582477802	BRACKET *LEFT*	1	-
12	582477804	BRACKET *RIGHT*	1	-
13	582476902	BRACKET	2	-
14	582475102	BRACKET	4	-
15	587225301	PIN	2	-
16	582551901	CLIP	2	-
17	588775401	DAMPER	2	-
18	582477401	PIN	2	-
19	589505102	PIVOT	2	-
20	589489601	RETAINER	2	-
21	589500902	SWITCH	2	-
22	582475001	SPACER	2	-
23	582711303	SPACER	2	-
24	582477001	SPRING	4	-
25	532151332	SPRING	2	-
26	582477702	SPRING	2	-

Ref.	Article N.	Description	Qty	Kit
27	597744501	ADAPTER	2	-
28	582477501	CABLE	2	-
29	539110607	STUD	4	-
30	582477602	BRACKET	2	-
31	582476801	BEARING	4	-
32	539131518	BEARING	8	-
33	532170165	BOLT	4	-
34	525544001	BOLT	4	-
35	525465402	SCREW	2	-
36	539976934	SCREW	4	-
37	582477102	SCREW	4	-
38	582476401	SCREW	4	-
39	596240801	BOLT	2	-
40	595901501	BOLT	4	-
41	577117701	SCREW	2	-
42	589505602	SCREW	2	-
44	594944401	NUT	14	-
45	596040901	HEXAGON NUT	4	-
46	521996502	NUT	6	-
47	539990184	NUT	4	-
48	596134901	WASHER	2	-
49	539990187	WASHER	4	-
50	596204101	WASHER	2	-
51	522023401	WASHER	4	-
1	582475501	LEVER -	1	-
2	582475502	LEVER -	1	-
3	501567001	ROD *For 967930101-00*	1	-
3	592653701	CONTROL *LEFT For 96767860300, 96767860200, 96767860101, 967678701. 967678601*	1	-
3	592653702	CONTROL *RIGHT*	1	-
4	588692502	ROD -	2	-
5	579764601	JOINT -	2	-
6	582484001	BELLOWS *For 967930101-00*	1	-

Ref.	Article N.	Description	Qty	Kit
6	591193301	SERVICE KIT *For 96767860300, 96767860200, 96767860101, 967678701-00, 967678601-00*	1	-
7	582484101	BELLOWS *For 967930101-00*	1	-
7	591193302	SERVICE KIT *For 96767860300, 96767860200, 96767860101, 967678701-00, 967678601-00*	1	-
8	592653801	CARRIER *w/BEARINGS LEFT/ For 96767860300, 96767860200, 96767860101, 967678701-00, 967678601-00*	1	-
8	592653802	CARRIER *w/BEARINGS LEFT/ For 967930101-00*	1	-
9	592653901	CARRIER -	2	-
10	592724002	CONTROL -	1	-
10	592724001	CONTROL -	1	-
11	592653501	PARKING BRAKE -	1	-
12	582477802	BRACKET *LEFT*	1	-
12	582477804	BRACKET *RIGHT*	1	-
13	582476901	BRACKET -	2	-
14	582475102	BRACKET -	4	-
15	587225301	PIN -	2	-
16	582551901	CLIP -	2	-
17	588775401	DAMPER -	2	-
18	582477401	PIN -	2	-
19	589505101	PIVOT -	2	-
20	589489601	RETAINER -	2	-
21	589500901	SWITCH -	2	-
22	582475001	SPACER -	2	-

Ref.	Article N.	Description	Qty	Kit
23	582711303	SPACER -	2	-
24	582477001	SPRING -	4	-
25	532151332	SPRING -	2	-
26	582477701	SPRING -	2	-
27	582477201	YOKE -	2	-
28	582477501	CABLE -	2	-
29	539110607	STUD -	4	-
30	582477601	BRACKET -	2	-
31	582476801	BEARING -	4	-
32	539131518	BEARING -	8	-
33	539110303	BOLT -	4	-
34	525544001	BOLT -	4	-
35	525465401	SCREW -	2	-
36	539976934	SCREW -	4	-
37	582477101	SCREW -	4	-
38	582476401	SCREW -	2	-
39	539115574	EYE BOLT -	2	-
40	539990208	SCREW -	4	-
41	577117701	SCREW -	6	-
42	589505601	SCREW -	2	-
43	582482901	RIVET -	12	-
44	539112899	NUT, 5/16-18, NYLOC	14	-

Ref.	Article N.	Description	Qty	Kit
		-		
45	539990223	NUT -	4	-
46	521996501	NUT -	6	-
47	539990184	NUT -	4	-
48	539990692	WASHER -	2	-
49	539990187	WASHER -	4	-
50	819111116	WASHER -	2	-
51	522023401	WASHER -	2	-
1	599893003	COVER -	1	-
2	599893004	COVER -	1	-
3	596564002	BOLT -	4	-
1	599156701	TIRE *fits 967669801-00, 967699802-00*	2	-
1	510154601	TIRE *Use From SN: 060117F000001 To SN: 090820F999999*	2	-
2	539105152	TIRE *24x12-12 Tire Only*	2	-
2	510154502	WHEEL RIM *Rim Only*	2	-
2	510154501	TIRE *Tire & Rim Assembly*	2	-
3	525611902	FORK -	2	-
4	510034001	CAP -	2	-
5	510034301	SEAL -	2	-
6	510034403	BEARING -	4	-
7	596623501	VALVE -	2	-
8	590690701	SPACER *Use From SN: 060117F000001 To SN: 090820F999999*	4	-

Ref.	Article N.	Description	Qty	Kit
9	590704902	SPACER *Use From SN: 060117F000001 To SN: 090820F999999*	2	-
10	594946501	BOLT -	2	-
11	522842602	NUT -	2	-
12	587653902	NUT -	8	-
13	873930800	NUT *For 967678802-01, 967678801-01*	2	-
13	521991102	NUT *For 96793040300, 967669703-01*	2	-
14	595086801	WASHER -	2	-
15	574824701	WASHER -	2	-
16	539102484	BEARING *Use after SN: 090920F000001*	4	-
17	539105307	ROLLER BEARING *Use after SN: 090920F000001*	4	-
18	539912234	VALVE *Use after SN: 090920F000001*	2	-
19	599405101	SHIM *Use after SN: 090920F000001*	2	-
20	539133007	WASHER *Use after SN: 090920F000001*	2	-
21	539105522	TIRE *13X6.5-6 Tire Only Use After SN: 090920F000001*	2	-
21	581199501	WHEEL ASSY *Use after SN: 090920F000001*	2	-
22	575334901	SPACER *Use after SN: 090920F000001*	2	-
23	596623501	VALVE -	2	-
24	597383801	SERVICE KIT *Use From SN: 060117F000001 To SN: 090820F999999*	2	-
1	597383801	SERVICE KIT -	1	-
1	510154601	TIRE -	2	-
2	522905101	TIRE -	2	-
3	525611902	FORK	2	-

Ref.	Article N.	Description	Qty	Kit
		-		
4	510034001	CAP -	2	-
4	522905102	TIRE -	2	-
5	510034301	SEAL -	2	-
6	510034403	BEARING -	4	-
7	539101474	NIPPLE -	2	-
8	590690701	SPACER -	4	-
9	590704901	SPACER -	2	-
10	539105517	BOLT -	2	-
11	522842601	NUT -	2	-
12	587653902	NUT -	8	-
13	873930800	NUT -	2	-
14	539990250	WASHER -	2	-
15	574824701	WASHER -	2	-
1	591359801	FRAME *w/ SAFETY DECALS*	1	-
2	522675702	BUMPER -	1	-
3	587898002	GUARD -	1	-
4	589808802	BRACKET -	2	-
5	589807202	BRACKET -	1	-
6	589448202	BRACKET -	1	-
7	589448204	BRACKET -	1	-
8	582481101	BRACKET -	2	-

Ref.	Article N.	Description	Qty	Kit
9	582481002	PANEL *For 96767860300, 96767860200, 96767860101, 967678701-00, 967678601-00*	1	-
9	595327502	PANEL *For 967930101-00*	1	-
10	582481004	PANEL -	1	-
11	582480803	PANEL -	1	-
12	582480804	PANEL -	1	-
13	589304602	PLATE -	1	-
14	574228602	PLATE *For 96767860300, 96767860200, 96767860101, 967678701-00, 967678601-00*	1	-
14	596694102	PLATE *For 967930101-00*	1	-
15	582478701	BUMPER -	2	-
16	575811501	BUMPER -	2	-
17	522801401	BUMPER -	4	-
18	539102587	ABSORBER -	2	-
19	589745202	COVER -	1	-
20	582480502	CROSS MEMBER -	1	-
21	589744001	ISOLATOR -	2	-
22	539104411	KNOB -	1	-
23	591344501	KNOB -	2	-
24	591101701	PIN -	2	-
25	591101601	PIN -	2	-
26	582460702	PLATE -	1	-
27	582460606	BRACKET *MX-14*	1	-
28	589500701	BRACKET	1	-

Ref.	Article N.	Description	Qty	Kit
		-		
29	539104763	CLIP -	7	-
30	589806801	NUT -	2	-
31	539111028	NUTSERT 5/16-18 THICK GRIP -	2	-
32	525612801	SCREW -	4	-
33	574233801	SCREW -	2	-
34	525544001	BOLT -	2	-
35	539113226	BOLT -	4	-
36	577117701	SCREW -	4	-
37	539100145	BOLT -	2	-
38	872140404	BOLT -	4	-
39	872140406	BOLT *For 96767860300, 96767860200, 96767860101, 967678701-00, 967678601-00*	2	-
39	539115620	1/4-20X3/4 CARR BLT *For 967930101-00*	2	-
40	539990316	BOLT -	14	-
41	539990208	SCREW -	2	-
42	539110303	BOLT -	4	-
43	580754601	BOLT -	6	-
44	589797201	SCREW -	2	-
45	817490408	SCREW -	2	-
46	585986101	BOLT -	2	-
47	525829101	NUT -	6	-
48	539976978	NUT -	6	-

Ref.	Article N.	Description	Qty	Kit
49	521996501	NUT -	12	-
50	539112899	NUT, 5/16-18, NYLOC -	21	-
51	539102653	WASHER -	4	-
52	539108120	NUT *For 967930101-00*	1	-
53	583611601	BOLT *For 967930101-00*	1	-
54	591176601	BOLT *For 967930101-00*	1	-
58	590877803	ROPS *ROPS ASSY*	1	-

GUARDS

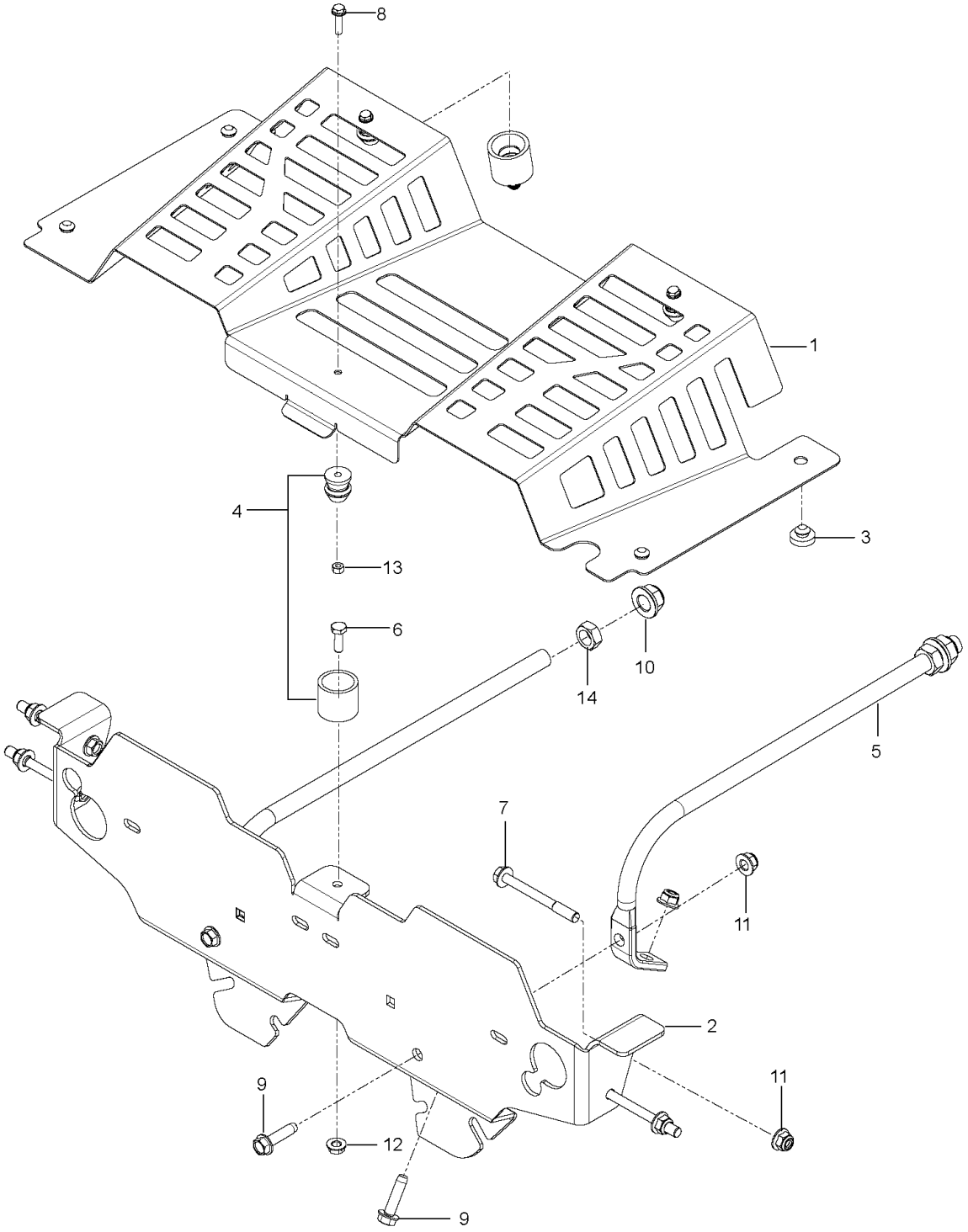

Ref.	Article N.	Description	Qty	Kit
1	582483902	PANEL	1	-
2	582483602	PANEL	1	-
3	586161801	HOUR METER	1	-
4	574455401	SWITCH	1	-
5	589887201	SWITCH	1	-

Ref.	Article N.	Description	Qty	Kit
6	574455501	KEY	1	-
7	581878301	LIGHT *For 967930101-00, 967678701-00*	1	-
7	574206901	CABLE *CHOKE/ For 96767860300, 96767860200, 96767860101*	1	-
8	582120301	THROTTLE CONTROL *46*	1	-
9	589819501	BATTERY *MX-9/ For 967930101-00, 967678701-00, 967678601-00*	1	-
9	589819502	BATTERY *MX-12/ For 967930101-00, 967678701-00, 967678601-00*	1	-
9	589819503	BATTERY *MX-14/ For 96767860300, 96767860200, 96767860101*	1	-
9	582460606	BRACKET *MX-14*	1	-
9	596990201	SERVICE KIT *MX-12 Bracket (Battery not included) For 967930101-00, 967678701-00, 967678601-00*	1	-
10	539103178	NUT CAP	1	-
11	539132624	KNOB	1	-
12	539102759	INSULATOR	2	-
13	592872701	FUEL GAUGE	2	-
14	539114341	SCREW	6	-
15	532199855	SCREW	2	-
16	582460801	SCREW	2	-
21	593777801	HARNESS *FOR CARB ENGINES*	1	-
21	593777803	HARNESS *FOR KOHLER & YAMAHA EFI*	1	-
22	589838501	HARNESS	1	-
23	574514001	TIMER *NOT SHOWN*	1	-
24	590632101	CABLE *NOT SHOWN*	1	-
25	539101714	SOLENOID *NOT SHOWN (SOLENOID KAW FX)*	1	-
1	574437301	DECAL *BELT ROUTING*	1	-
2	590209401	DECAL *MOTION/BRAKE RIGHT*	1	-
3	590209501	DECAL *MOTION_BRAKE_LEFT*	1	-

Ref.	Article N.	Description	Qty	Kit
3	590807601	DECAL *Z554X*	1	-
4	581724301	DECAL *NO STEP*	2	-
5	539105745	DECAL *BATTERY WARNING*	1	-
6	539105744	DECAL *DANGER BELT*	2	-
7	581724401	DECAL *DEFLECTOR WARNING*	1	-
8	532424102	DECAL *SPARK ARRESTOR*	1	-
9	574455001	DECAL *CROWN LARGE*	1	-
10	574569006	DECAL *ROPS/ For 96767860300, 96767860200,*	1	-
10	593011101	DECAL *ROPS/ For 967930101-00, 967678701-00, 967678601-00*	1	-
11	574569002	DECAL *ROPS WARNING*	1	-
12	574569401	DECAL *FUSE*	1	-
13	584904601	DECAL *DECK/DEFLECT WARNING*	1	-
14	532428676	DECAL *CROWN SMALL*	1	-
15	590799301	DECAL *DECK HEIGHT*	1	-
16	590210001	DECAL *COMMERCIAL*	1	-
17	590846801	DECAL *MAINTANCE/SERVICE*	1	-
18	590210301	DECAL *CONTROL PANEL RIGHT - CHOKE /For 96767860300, 96767860200, 96767860101*	1	-
18	590210302	DECAL *CONTROL PANEL RIGHT-EFI/ For 967930101-00, 967678701-00, 967678601-00*	1	-
19	590210501	DECAL *CONTROL PANEL LEFT*	1	-
20	590209701	DECAL *TRANSMISSION WARNING*	1	-
21	590209202	DECAL	1	-

Ref.	Article N.	Description	Qty	Kit
		START W/ CHOKE		
22	577469001	DECAL *EMBLEM*	2	-
30	577150101	DECAL *FUEL - NOT SHOWN*	1	-
31	590807801	DECAL *Z560X / For 967678601-00, 967678701-00*	1	-
32	590807901	DECAL *Z572X / For 967678601-00, 967678701-00*	1	-
1	582733302	PLATE -	1	-
2	525749501	CLUTCH -	1	-
3	522676702	STOP -	1	-
4	539118911	NIPPLE -	1	-
5	522837001	PLUG -	1	-
6	510019801	PULLEY -	1	-
7	539119680	ADAPTER -	1	-
8	539105072	90DEG.ELBOW 3/8NPT -	1	-
9	525749901	KEY -	1	-
10	587886001	MUFFLER -	1	-
11	539109618	O-RING -	1	-
12	505280001	TIE WRAP -	1	-
13	581332801	BOLT -	1	-
14	574233801	SCREW -	4	-
15	539990563	SCREW -	4	-
16	874780716	BOLT -	1	-
17	539990208	SCREW -	2	-

Ref.	Article N.	Description	Qty	Kit
18	539102933	SCREW -	2	-
19	539108120	NUT -	1	-
20	539112899	NUT, 5/16-18, NYLOC -	8	-
21	539102582	NUT -	1	-
22	539102593	WASHER -	4	-
23	539990247	WASHER -	1	-
24	539125626	WASHER -	1	-
25	586839701	GASKET *NOT SHOWN*	2	-
1	582483105	FUEL TANK ASSY *For 96767860300, 96767860200, 96767860101, 967678701-00, 967678601-00*	1	-
1	590680505	TANK UNIT ASSY *For 967930101-00*	1	-
2	582481705	FUEL TANK ASSY *For 96767860300, 96767860200, 96767860101, 967678701-00, 967678601-00*	1	-
2	590680405	TANK UNIT ASSY *For 967930101-00*	1	-
3	587044550	HOSE -	1	-
4	587044526	HOSE -	1	-
5	587044517	HOSE -	1	-
6	587044846	HOSE -	1	-
7	587044808	HOSE *For 967930101-00*	1	-
7	587044833	HOSE *For 96767860300, 96767860200, 96767860101, 967678701-00, 967678601-00*	1	-
8	587044824	HOSE -	1	-
9	574206602	FITTING -	1	-
10	575018101	CAP -	2	-
11	582483301	GUARD	1	-

Ref.	Article N.	Description	Qty	Kit
		-		
12	590638801	SENSOR -	2	-
13	576618101	TANK VENT -	2	-
14	539102679	VALVE -	1	-
15	582482301	GUARD -	1	-
15	525865402	TUBE ASSY -	1	-
16	532003645	BUSHING -	2	-
17	590209101	GROMMET -	2	-
18	584648201	GROMMET -	2	-
19	582481502	BRACKET -	2	-
20	582481602	BRACKET -	2	-
20	525865403	TUBE ASSY -	1	-
21	582483401	COVER -	1	-
22	539912222	CLAMP -	6	-
23	575436501	CLAMP -	6	-
24	582482601	CLIP -	8	-
25	505280001	TIE WRAP -	5	-
26	874490548	BOLT -	6	-
27	582482401	COVER -	1	-
27	590257301	SCREW -	6	-
28	817490516	SCREW -	6	-
29	582484201	SCREW -	8	-

Ref.	Article N.	Description	Qty	Kit
30	539112899	NUT, 5/16-18, NYLOC -	20	-
31	532126684	SHIM -	6	-
1	591359901	SHIELD -	1	-
2	582461206	BRACKET -	1	-
3	539102587	ABSORBER -	4	-
4	582461701	HOLDER ASSY -	3	-
5	582461303	ROD -	2	-
6	874780412	BOLT -	3	-
7	874490548	BOLT -	4	-
8	503200001	SCREW EHHFM -	3	-
9	587592101	SCREW -	4	-
10	521991101	NUT -	2	-
11	539112899	NUT, 5/16-18, NYLOC -	8	-
12	532191730	NUT -	3	-
13	731231405	HEXAGON NUT -	3	-
14	873350800	NUT -	2	-
1	582463102	ARM -	1	-
2	501603701	BEARING -	2	-
3	582479102	BRACKET -	4	-
4	582480101	CLAMP -	4	-
5	529311401	FITTING -	2	-
6	582479404	FRAME	1	-

Ref.	Article N.	Description	Qty	Kit
		-		
7	582480204	HOSE -	2	-
8	586933802	MOUNT -	1	-
9	582468101	SHAFT -	1	-
10	587654101	PULLEY -	2	-
11	582716201	ROD END -	1	-
12	582468401	SPRING -	1	-
13	574499201	TANK -	2	-
14	582480001	TRANSMISSION -	1	-
15	582480002	TRANSMISSION -	1	-
16	576127201	FILTER -	1	-
17	582480402	V-BELT -	1	-
18	874490652	SCREW -	1	-
19	574210601	SCREW -	8	-
20	525828901	BOLT *For 96767860300, 96767860200, 96767860101*	8	-
20	874490848	SCREW *For 967930101-00, 967678701-00, 967678601-00*	8	-
21	539100145	BOLT -	2	-
22	539990645	BOLT -	2	-
23	532165857	SCREW -	4	-
24	539913847	BOLT -	1	-
25	521991101	NUT -	8	-
26	521996501	NUT -	6	-

Ref.	Article N.	Description	Qty	Kit
27	819133210	WASHER -	1	-
1	591359704	CUTTING DECK -	1	-
2	588264805	DRIVE BELT -	1	-
3	575265901	BLADE -	3	-
4	582462702	ARM -	1	-
5	521979701	PULLEY -	3	-
6	510015101	PULLEY -	3	-
7	582463003	PULLEY -	1	-
8	582463006	PULLEY -	1	-
9	582468801	CHUTE -	1	-
10	510254501	SHIELD -	3	-
11	574169601	ROLLER -	4	-
12	574196401	TUBE -	2	-
13	574196501	TUBE -	1	-
14	539131518	BEARING -	2	-
15	510263701	BEARING -	2	-
16	582467302	BRACKET -	1	-
17	582463203	BRACKET *For 96767860300, 96767860200, 96767860101, 967678701-00, 967678601-00*	1	-
17	582463207	BRACKET *For 967930101-00*	1	-
18	582463204	BRACKET *For 96767860300, 96767860200, 96767860101, 967678701-00, 967678601-00*	1	-
18	582463208	BRACKET *For 967930101-00*	1	-
19	582472502	BELT GUARD	1	-

Ref.	Article N.	Description	Qty	Kit
		For 96767860300, 96767860200, 96767860101, 967678701-00, 967678601-00		
19	594913302	BELT GUIDE *For 967930101-00*	1	-
20	582470201	KEEPER -	1	-
21	539104411	KNOB -	2	-
22	590523702	PLATE -	1	-
23	582466401	PLATE -	1	-
24	582468101	SHAFT -	1	-
25	582468301	SPACER -	1	-
26	589455201	SPACER -	1	-
27	582468001	SPRING -	1	-
28	510437502	BAFFLE -	1	-
29	539104763	CLIP -	2	-
30	539115620	1/4-20X3/4 CARR BLT -	4	-
31	872140610	BOLT -	3	-
32	510022301	SCREW -	2	-
33	872140628	BOLT -	2	-
34	872140864	BOLT -	1	-
35	874490644	BOLT -	2	-
36	574210601	SCREW -	18	-
37	525612801	SCREW -	2	-
38	521996601	SCREW -	1	-
39	582476401	SCREW -	4	-

Ref.	Article N.	Description	Qty	Kit
40	539130315	BOLT -	9	-
41	539119007	SCREW -	3	-
42	574202001	BOLT -	1	-
43	539913847	BOLT -	1	-
44	521996501	NUT -	10	-
45	539112899	NUT, 5/16-18, NYLOC -	4	-
46	521991101	NUT -	3	-
47	539109332	NUT -	1	-
48	539976978	NUT -	4	-
49	539106504	WASHER -	2	-
50	539109600	WASHER -	9	-
1	582462602	SHAFT -	1	-
2	592654001	ARM -	1	-
2	592654002	ARM -	1	-
3	582465402	ARM -	2	-
4	582463902	ARM -	2	-
5	582462001	ARM -	1	-
6	582462002	ARM -	1	-
7	582464601	ROD -	2	-
8	582472801	ROD -	1	-
9	582471401	ROD -	1	-
10	510408301	PEDAL	1	-

Ref.	Article N.	Description	Qty	Kit
		-		
11	510089501	PAD -	1	-
12	510023902	BLOCK -	4	-
13	582467201	BLOCK -	1	-
14	582466902	BRACKET -	1	-
15	582468902	BRACKET -	2	-
16	589454103	LEVER -	1	-
17	592654101	LEVER -	1	-
18	539109693	LIFT CHAIN - 3 LINK -	2	-
18	589454104	LEVER -	1	-
19	539102641	CHAIN -	2	-
20	582464801	PIVOT -	2	-
21	582763902	PLATE -	1	-
22	589453201	LEVER ASSY -	1	-
23	582469001	SHACKLE -	2	-
24	582464201	SHAFT -	2	-
25	593091801	SPRING -	2	-
26	582471301	SPRING -	1	-
27	582467001	SWIVEL -	1	-
28	582467101	SWIVEL -	1	-
29	582469901	BUSHING -	2	-
30	582469801	BUSHING -	2	-

Ref.	Article N.	Description	Qty	Kit
31	510089201	BUSHING -	5	-
32	539912730	RING -	1	-
33	539990870	RING -	2	-
34	590465501	PIN -	1	-
35	539102889	SPLIT PIN -	2	-
36	582466701	SCREW -	4	-
37	582472601	SCREW -	2	-
38	574202001	BOLT -	2	-
39	539990580	SCREW -	1	-
40	589786001	SCREW -	4	-
41	501064102	SCREW -	3	-
42	501064101	SCREW -	4	-
43	510408201	BOLT -	1	-
44	539101175	SCREW -	4	-
45	582465601	SCREW -	2	-
46	589677701	NUT -	3	-
47	539976978	NUT -	1	-
48	539990546	NUT -	2	-
49	539119124	NUT -	4	-
50	539110340	NUT -	3	-
51	521996501	NUT -	6	-
52	539112899	NUT, 5/16-18, NYLOC	2	-

Ref.	Article N.	Description	Qty	Kit
		-		
53	539132019	NUT -	4	-
54	582466601	NUT -	4	-
55	539108732	NUT 3/8-24 HEX JAM ZD -	2	-
56	539991043	BUSHING -	2	-
1	579866104	SEAT ASSY -	1	-
1	582460103	SEAT *Fits 97058500100*	1	-
2	582478801	BAR -	1	-
3	582478201	BRACKET -	2	-
4	590555002	BRACKET -	1	-
5	590481801	ISOLATOR -	8	-
6	539116377	INSERT -	4	-
7	590373501	LATCH -	1	-
8	590506802	PLATE -	1	-
9	590507201	ROD -	1	-
10	539113952	SPRING -	2	-
11	582478101	NUT -	4	-
12	532192749	SWITCH -	1	-
13	539108392	HCS 5/16-18 X 5/8 GR 5 ZD -	4	-
14	582478901	SCREW -	2	-
15	582478501	SCREW -	2	-
16	539990316	BOLT -	8	-

Ref.	Article N.	Description	Qty	Kit
17	582478601	NUT -	2	-
18	539913847	BOLT -	1	-
19	539112899	NUT, 5/16-18, NYLOC -	6	-
20	522023401	WASHER -	2	-
21	532413524	WASHER -	8	-
22	539990118	WASHER -	2	-
23	539990187	WASHER -	4	-
24	579866109	SEAT ASSY *Knob*	1	-
25	579866108	SEAT ASSY *REPLACEMENT PAD ONLY*	2	-
1	580942201	HUB -	3	-
2	580942101	SHAFT -	3	-
3	580942701	V-RING -	6	-
4	580942601	SEAL -	6	-
5	583911101	BEARING KIT *ALSO ORDER TOOL KIT*	3	-
6	580942301	SPACER -	3	-
7	580942501	CARRIER -	3	-
8	539976998	NIPPLE -	3	-
9	539977326	FITTING -	3	-
10	539130653	NUT -	3	-
11	580943306	SPINDLE -	3	-
12	580942801	SHIM *For 967678601-00, 967678701-00*	1	-
13	574754201	KIT	1	-

Ref.	Article N.	Description	Qty	Kit
		NOT SHOWN		
1	582475501	LEVER *LEFT*	1	-
2	582475502	LEVER *RIGHT*	1	-
3	596925601	ROD *RIGHT SIDE ASSY*	1	-
3	596925701	ROD *LEFT SIDE ASSY*	1	-
3	598852501	SERVICE KIT *COUPLER KIT. CONTAINS (2) COUPLERS THAT FITS BOTH LH/RH SIDES. REF # 4 SCREWS INTO THIS COUPLER*	1	-
4	588692502	ROD *ROD.END.MALE.LH THREAD*	2	-
5	579764601	JOINT *JOINT.RH.THREAD.FEMALE.5/16*	2	-
6	539923515	SPACER	2	-
7	597744702	BRACKET	2	-
8	592653801	CARRIER *w/BEARINGS LEFT*	1	-
8	592653802	CARRIER *w/BEARINGS RIGHT*	1	-
9	592653901	CARRIER	2	-
12	582477802	BRACKET *LEFT*	1	-
12	582477804	BRACKET *RIGHT*	1	-
13	582476902	BRACKET	2	-
14	582475102	BRACKET	4	-
15	587225301	PIN	2	-
16	582551901	CLIP	2	-
17	588775401	DAMPER	2	-
18	582477401	PIN	2	-
19	589505102	PIVOT	2	-
20	589489601	RETAINER	2	-
21	589500902	SWITCH	2	-
22	582475001	SPACER	2	-
23	582711303	SPACER	2	-
24	582477001	SPRING	4	-
25	532151332	SPRING	2	-
26	582477702	SPRING	2	-

Ref.	Article N.	Description	Qty	Kit
27	597744501	ADAPTER	2	-
28	582477501	CABLE	2	-
29	539110607	STUD	4	-
30	582477602	BRACKET	2	-
31	582476801	BEARING	4	-
32	539131518	BEARING	8	-
33	532170165	BOLT	4	-
34	525544001	BOLT	4	-
35	525465402	SCREW	2	-
36	539976934	SCREW	4	-
37	582477102	SCREW	4	-
38	582476401	SCREW	4	-
39	596240801	BOLT	2	-
40	595901501	BOLT	4	-
41	577117701	SCREW	2	-
42	589505602	SCREW	2	-
44	594944401	NUT	14	-
45	596040901	HEXAGON NUT	4	-
46	521996502	NUT	6	-
47	539990184	NUT	4	-
48	596134901	WASHER	2	-
49	539990187	WASHER	4	-
50	596204101	WASHER	2	-
51	522023401	WASHER	4	-
1	582475501	LEVER -	1	-
2	582475502	LEVER -	1	-
3	501567001	ROD *For 967930101-00*	1	-
3	592653701	CONTROL *LEFT For 96767860300, 96767860200, 96767860101, 967678701. 967678601*	1	-
3	592653702	CONTROL *RIGHT*	1	-
4	588692502	ROD -	2	-
5	579764601	JOINT -	2	-
6	582484001	BELLOWS *For 967930101-00*	1	-

Ref.	Article N.	Description	Qty	Kit
6	591193301	SERVICE KIT *For 96767860300, 96767860200, 96767860101, 967678701-00, 967678601-00*	1	-
7	582484101	BELLOWS *For 967930101-00*	1	-
7	591193302	SERVICE KIT *For 96767860300, 96767860200, 96767860101, 967678701-00, 967678601-00*	1	-
8	592653801	CARRIER *w/BEARINGS LEFT/ For 96767860300, 96767860200, 96767860101, 967678701-00, 967678601-00*	1	-
8	592653802	CARRIER *w/BEARINGS LEFT/ For 967930101-00*	1	-
9	592653901	CARRIER -	2	-
10	592724002	CONTROL -	1	-
10	592724001	CONTROL -	1	-
11	592653501	PARKING BRAKE -	1	-
12	582477802	BRACKET *LEFT*	1	-
12	582477804	BRACKET *RIGHT*	1	-
13	582476901	BRACKET -	2	-
14	582475102	BRACKET -	4	-
15	587225301	PIN -	2	-
16	582551901	CLIP -	2	-
17	588775401	DAMPER -	2	-
18	582477401	PIN -	2	-
19	589505101	PIVOT -	2	-
20	589489601	RETAINER -	2	-
21	589500901	SWITCH -	2	-
22	582475001	SPACER -	2	-

Ref.	Article N.	Description	Qty	Kit
23	582711303	SPACER -	2	-
24	582477001	SPRING -	4	-
25	532151332	SPRING -	2	-
26	582477701	SPRING -	2	-
27	582477201	YOKE -	2	-
28	582477501	CABLE -	2	-
29	539110607	STUD -	4	-
30	582477601	BRACKET -	2	-
31	582476801	BEARING -	4	-
32	539131518	BEARING -	8	-
33	539110303	BOLT -	4	-
34	525544001	BOLT -	4	-
35	525465401	SCREW -	2	-
36	539976934	SCREW -	4	-
37	582477101	SCREW -	4	-
38	582476401	SCREW -	2	-
39	539115574	EYE BOLT -	2	-
40	539990208	SCREW -	4	-
41	577117701	SCREW -	6	-
42	589505601	SCREW -	2	-
43	582482901	RIVET -	12	-
44	539112899	NUT, 5/16-18, NYLOC	14	-

Ref.	Article N.	Description	Qty	Kit
		-		
45	539990223	NUT -	4	-
46	521996501	NUT -	6	-
47	539990184	NUT -	4	-
48	539990692	WASHER -	2	-
49	539990187	WASHER -	4	-
50	819111116	WASHER -	2	-
51	522023401	WASHER -	2	-
1	599893003	COVER -	1	-
2	599893004	COVER -	1	-
3	596564002	BOLT -	4	-
1	599156701	TIRE *fits 967669801-00, 967699802-00*	2	-
1	510154601	TIRE *Use From SN: 060117F000001 To SN: 090820F999999*	2	-
2	539105152	TIRE *24x12-12 Tire Only*	2	-
2	510154502	WHEEL RIM *Rim Only*	2	-
2	510154501	TIRE *Tire & Rim Assembly*	2	-
3	525611902	FORK -	2	-
4	510034001	CAP -	2	-
5	510034301	SEAL -	2	-
6	510034403	BEARING -	4	-
7	596623501	VALVE -	2	-
8	590690701	SPACER *Use From SN: 060117F000001 To SN: 090820F999999*	4	-

Ref.	Article N.	Description	Qty	Kit
9	590704902	SPACER *Use From SN: 060117F000001 To SN: 090820F999999*	2	-
10	594946501	BOLT -	2	-
11	522842602	NUT -	2	-
12	587653902	NUT -	8	-
13	873930800	NUT *For 967678802-01, 967678801-01*	2	-
13	521991102	NUT *For 96793040300, 967669703-01*	2	-
14	595086801	WASHER -	2	-
15	574824701	WASHER -	2	-
16	539102484	BEARING *Use after SN: 090920F000001*	4	-
17	539105307	ROLLER BEARING *Use after SN: 090920F000001*	4	-
18	539912234	VALVE *Use after SN: 090920F000001*	2	-
19	599405101	SHIM *Use after SN: 090920F000001*	2	-
20	539133007	WASHER *Use after SN: 090920F000001*	2	-
21	539105522	TIRE *13X6.5-6 Tire Only Use After SN: 090920F000001*	2	-
21	581199501	WHEEL ASSY *Use after SN: 090920F000001*	2	-
22	575334901	SPACER *Use after SN: 090920F000001*	2	-
23	596623501	VALVE -	2	-
24	597383801	SERVICE KIT *Use From SN: 060117F000001 To SN: 090820F999999*	2	-
1	597383801	SERVICE KIT -	1	-
1	510154601	TIRE -	2	-
2	522905101	TIRE -	2	-
3	525611902	FORK	2	-

Ref.	Article N.	Description	Qty	Kit
		-		
4	510034001	CAP -	2	-
4	522905102	TIRE -	2	-
5	510034301	SEAL -	2	-
6	510034403	BEARING -	4	-
7	539101474	NIPPLE -	2	-
8	590690701	SPACER -	4	-
9	590704901	SPACER -	2	-
10	539105517	BOLT -	2	-
11	522842601	NUT -	2	-
12	587653902	NUT -	8	-
13	873930800	NUT -	2	-
14	539990250	WASHER -	2	-
15	574824701	WASHER -	2	-
1	591359801	FRAME *w/ SAFETY DECALS*	1	-
2	522675702	BUMPER -	1	-
3	587898002	GUARD -	1	-
4	589808802	BRACKET -	2	-
5	589807202	BRACKET -	1	-
6	589448202	BRACKET -	1	-
7	589448204	BRACKET -	1	-
8	582481101	BRACKET -	2	-

Ref.	Article N.	Description	Qty	Kit
9	582481002	PANEL *For 96767860300, 96767860200, 96767860101, 967678701-00, 967678601-00*	1	-
9	595327502	PANEL *For 967930101-00*	1	-
10	582481004	PANEL -	1	-
11	582480803	PANEL -	1	-
12	582480804	PANEL -	1	-
13	589304602	PLATE -	1	-
14	574228602	PLATE *For 96767860300, 96767860200, 96767860101, 967678701-00, 967678601-00*	1	-
14	596694102	PLATE *For 967930101-00*	1	-
15	582478701	BUMPER -	2	-
16	575811501	BUMPER -	2	-
17	522801401	BUMPER -	4	-
18	539102587	ABSORBER -	2	-
19	589745202	COVER -	1	-
20	582480502	CROSS MEMBER -	1	-
21	589744001	ISOLATOR -	2	-
22	539104411	KNOB -	1	-
23	591344501	KNOB -	2	-
24	591101701	PIN -	2	-
25	591101601	PIN -	2	-
26	582460702	PLATE -	1	-
27	582460606	BRACKET *MX-14*	1	-
28	589500701	BRACKET	1	-

Ref.	Article N.	Description	Qty	Kit
		-		
29	539104763	CLIP -	7	-
30	589806801	NUT -	2	-
31	539111028	NUTSERT 5/16-18 THICK GRIP -	2	-
32	525612801	SCREW -	4	-
33	574233801	SCREW -	2	-
34	525544001	BOLT -	2	-
35	539113226	BOLT -	4	-
36	577117701	SCREW -	4	-
37	539100145	BOLT -	2	-
38	872140404	BOLT -	4	-
39	872140406	BOLT *For 96767860300, 96767860200, 96767860101, 967678701-00, 967678601-00*	2	-
39	539115620	1/4-20X3/4 CARR BLT *For 967930101-00*	2	-
40	539990316	BOLT -	14	-
41	539990208	SCREW -	2	-
42	539110303	BOLT -	4	-
43	580754601	BOLT -	6	-
44	589797201	SCREW -	2	-
45	817490408	SCREW -	2	-
46	585986101	BOLT -	2	-
47	525829101	NUT -	6	-
48	539976978	NUT -	6	-

Ref.	Article N.	Description	Qty	Kit
49	521996501	NUT -	12	-
50	539112899	NUT, 5/16-18, NYLOC -	21	-
51	539102653	WASHER -	4	-
52	539108120	NUT *For 967930101-00*	1	-
53	583611601	BOLT *For 967930101-00*	1	-
54	591176601	BOLT *For 967930101-00*	1	-
58	590877803	ROPS *ROPS ASSY*	1	-

HYDRAULIC PUMP - MOTOR

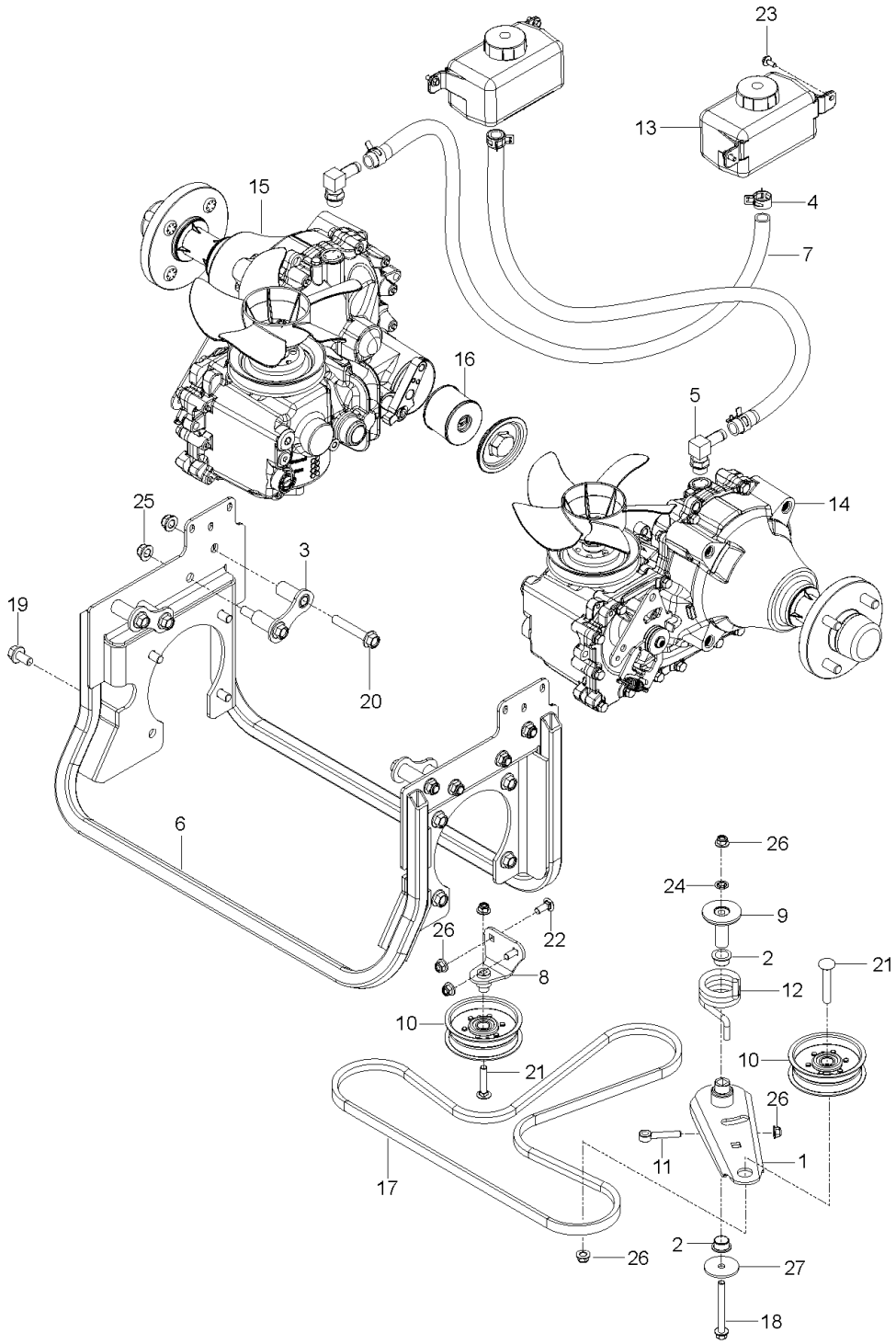

Ref.	Article N.	Description	Qty	Kit
1	582483902	PANEL	1	-
2	582483602	PANEL	1	-
3	586161801	HOUR METER	1	-
4	574455401	SWITCH	1	-
5	589887201	SWITCH	1	-

Ref.	Article N.	Description	Qty	Kit
6	574455501	KEY	1	-
7	581878301	LIGHT *For 967930101-00, 967678701-00*	1	-
7	574206901	CABLE *CHOKE/ For 96767860300, 96767860200, 96767860101*	1	-
8	582120301	THROTTLE CONTROL *46*	1	-
9	589819501	BATTERY *MX-9/ For 967930101-00, 967678701-00, 967678601-00*	1	-
9	589819502	BATTERY *MX-12/ For 967930101-00, 967678701-00, 967678601-00*	1	-
9	589819503	BATTERY *MX-14/ For 96767860300, 96767860200, 96767860101*	1	-
9	582460606	BRACKET *MX-14*	1	-
9	596990201	SERVICE KIT *MX-12 Bracket (Battery not included) For 967930101-00, 967678701-00, 967678601-00*	1	-
10	539103178	NUT CAP	1	-
11	539132624	KNOB	1	-
12	539102759	INSULATOR	2	-
13	592872701	FUEL GAUGE	2	-
14	539114341	SCREW	6	-
15	532199855	SCREW	2	-
16	582460801	SCREW	2	-
21	593777801	HARNESS *FOR CARB ENGINES*	1	-
21	593777803	HARNESS *FOR KOHLER & YAMAHA EFI*	1	-
22	589838501	HARNESS	1	-
23	574514001	TIMER *NOT SHOWN*	1	-
24	590632101	CABLE *NOT SHOWN*	1	-
25	539101714	SOLENOID *NOT SHOWN (SOLENOID KAW FX)*	1	-
1	574437301	DECAL *BELT ROUTING*	1	-
2	590209401	DECAL *MOTION/BRAKE RIGHT*	1	-
3	590209501	DECAL *MOTION_BRAKE_LEFT*	1	-

Ref.	Article N.	Description	Qty	Kit
3	590807601	DECAL *Z554X*	1	-
4	581724301	DECAL *NO STEP*	2	-
5	539105745	DECAL *BATTERY WARNING*	1	-
6	539105744	DECAL *DANGER BELT*	2	-
7	581724401	DECAL *DEFLECTOR WARNING*	1	-
8	532424102	DECAL *SPARK ARRESTOR*	1	-
9	574455001	DECAL *CROWN LARGE*	1	-
10	574569006	DECAL *ROPS/ For 96767860300, 96767860200,*	1	-
10	593011101	DECAL *ROPS/ For 967930101-00, 967678701-00, 967678601-00*	1	-
11	574569002	DECAL *ROPS WARNING*	1	-
12	574569401	DECAL *FUSE*	1	-
13	584904601	DECAL *DECK/DEFLECT WARNING*	1	-
14	532428676	DECAL *CROWN SMALL*	1	-
15	590799301	DECAL *DECK HEIGHT*	1	-
16	590210001	DECAL *COMMERCIAL*	1	-
17	590846801	DECAL *MAINTANCE/SERVICE*	1	-
18	590210301	DECAL *CONTROL PANEL RIGHT - CHOKE /For 96767860300, 96767860200, 96767860101*	1	-
18	590210302	DECAL *CONTROL PANEL RIGHT-EFI/ For 967930101-00, 967678701-00, 967678601-00*	1	-
19	590210501	DECAL *CONTROL PANEL LEFT*	1	-
20	590209701	DECAL *TRANSMISSION WARNING*	1	-
21	590209202	DECAL	1	-

Ref.	Article N.	Description	Qty	Kit
		START W/ CHOKE		
22	577469001	DECAL *EMBLEM*	2	-
30	577150101	DECAL *FUEL - NOT SHOWN*	1	-
31	590807801	DECAL *Z560X / For 967678601-00, 967678701-00*	1	-
32	590807901	DECAL *Z572X / For 967678601-00, 967678701-00*	1	-
1	582733302	PLATE -	1	-
2	525749501	CLUTCH -	1	-
3	522676702	STOP -	1	-
4	539118911	NIPPLE -	1	-
5	522837001	PLUG -	1	-
6	510019801	PULLEY -	1	-
7	539119680	ADAPTER -	1	-
8	539105072	90DEG.ELBOW 3/8NPT -	1	-
9	525749901	KEY -	1	-
10	587886001	MUFFLER -	1	-
11	539109618	O-RING -	1	-
12	505280001	TIE WRAP -	1	-
13	581332801	BOLT -	1	-
14	574233801	SCREW -	4	-
15	539990563	SCREW -	4	-
16	874780716	BOLT -	1	-
17	539990208	SCREW -	2	-

Ref.	Article N.	Description	Qty	Kit
18	539102933	SCREW -	2	-
19	539108120	NUT -	1	-
20	539112899	NUT, 5/16-18, NYLOC -	8	-
21	539102582	NUT -	1	-
22	539102593	WASHER -	4	-
23	539990247	WASHER -	1	-
24	539125626	WASHER -	1	-
25	586839701	GASKET *NOT SHOWN*	2	-
1	582483105	FUEL TANK ASSY *For 96767860300, 96767860200, 96767860101, 967678701-00, 967678601-00*	1	-
1	590680505	TANK UNIT ASSY *For 967930101-00*	1	-
2	582481705	FUEL TANK ASSY *For 96767860300, 96767860200, 96767860101, 967678701-00, 967678601-00*	1	-
2	590680405	TANK UNIT ASSY *For 967930101-00*	1	-
3	587044550	HOSE -	1	-
4	587044526	HOSE -	1	-
5	587044517	HOSE -	1	-
6	587044846	HOSE -	1	-
7	587044808	HOSE *For 967930101-00*	1	-
7	587044833	HOSE *For 96767860300, 96767860200, 96767860101, 967678701-00, 967678601-00*	1	-
8	587044824	HOSE -	1	-
9	574206602	FITTING -	1	-
10	575018101	CAP -	2	-
11	582483301	GUARD	1	-

Ref.	Article N.	Description	Qty	Kit
		-		
12	590638801	SENSOR -	2	-
13	576618101	TANK VENT -	2	-
14	539102679	VALVE -	1	-
15	582482301	GUARD -	1	-
15	525865402	TUBE ASSY -	1	-
16	532003645	BUSHING -	2	-
17	590209101	GROMMET -	2	-
18	584648201	GROMMET -	2	-
19	582481502	BRACKET -	2	-
20	582481602	BRACKET -	2	-
20	525865403	TUBE ASSY -	1	-
21	582483401	COVER -	1	-
22	539912222	CLAMP -	6	-
23	575436501	CLAMP -	6	-
24	582482601	CLIP -	8	-
25	505280001	TIE WRAP -	5	-
26	874490548	BOLT -	6	-
27	582482401	COVER -	1	-
27	590257301	SCREW -	6	-
28	817490516	SCREW -	6	-
29	582484201	SCREW -	8	-

Ref.	Article N.	Description	Qty	Kit
30	539112899	NUT, 5/16-18, NYLOC -	20	-
31	532126684	SHIM -	6	-
1	591359901	SHIELD -	1	-
2	582461206	BRACKET -	1	-
3	539102587	ABSORBER -	4	-
4	582461701	HOLDER ASSY -	3	-
5	582461303	ROD -	2	-
6	874780412	BOLT -	3	-
7	874490548	BOLT -	4	-
8	503200001	SCREW EHHFM -	3	-
9	587592101	SCREW -	4	-
10	521991101	NUT -	2	-
11	539112899	NUT, 5/16-18, NYLOC -	8	-
12	532191730	NUT -	3	-
13	731231405	HEXAGON NUT -	3	-
14	873350800	NUT -	2	-
1	582463102	ARM -	1	-
2	501603701	BEARING -	2	-
3	582479102	BRACKET -	4	-
4	582480101	CLAMP -	4	-
5	529311401	FITTING -	2	-
6	582479404	FRAME	1	-

Ref.	Article N.	Description	Qty	Kit
		-		
7	582480204	HOSE -	2	-
8	586933802	MOUNT -	1	-
9	582468101	SHAFT -	1	-
10	587654101	PULLEY -	2	-
11	582716201	ROD END -	1	-
12	582468401	SPRING -	1	-
13	574499201	TANK -	2	-
14	582480001	TRANSMISSION -	1	-
15	582480002	TRANSMISSION -	1	-
16	576127201	FILTER -	1	-
17	582480402	V-BELT -	1	-
18	874490652	SCREW -	1	-
19	574210601	SCREW -	8	-
20	525828901	BOLT *For 96767860300, 96767860200, 96767860101*	8	-
20	874490848	SCREW *For 967930101-00, 967678701-00, 967678601-00*	8	-
21	539100145	BOLT -	2	-
22	539990645	BOLT -	2	-
23	532165857	SCREW -	4	-
24	539913847	BOLT -	1	-
25	521991101	NUT -	8	-
26	521996501	NUT -	6	-

Ref.	Article N.	Description	Qty	Kit
27	819133210	WASHER -	1	-
1	591359704	CUTTING DECK -	1	-
2	588264805	DRIVE BELT -	1	-
3	575265901	BLADE -	3	-
4	582462702	ARM -	1	-
5	521979701	PULLEY -	3	-
6	510015101	PULLEY -	3	-
7	582463003	PULLEY -	1	-
8	582463006	PULLEY -	1	-
9	582468801	CHUTE -	1	-
10	510254501	SHIELD -	3	-
11	574169601	ROLLER -	4	-
12	574196401	TUBE -	2	-
13	574196501	TUBE -	1	-
14	539131518	BEARING -	2	-
15	510263701	BEARING -	2	-
16	582467302	BRACKET -	1	-
17	582463203	BRACKET *For 96767860300, 96767860200, 96767860101, 967678701-00, 967678601-00*	1	-
17	582463207	BRACKET *For 967930101-00*	1	-
18	582463204	BRACKET *For 96767860300, 96767860200, 96767860101, 967678701-00, 967678601-00*	1	-
18	582463208	BRACKET *For 967930101-00*	1	-
19	582472502	BELT GUARD	1	-

Ref.	Article N.	Description	Qty	Kit
		For 96767860300, 96767860200, 96767860101, 967678701-00, 967678601-00		
19	594913302	BELT GUIDE *For 967930101-00*	1	-
20	582470201	KEEPER -	1	-
21	539104411	KNOB -	2	-
22	590523702	PLATE -	1	-
23	582466401	PLATE -	1	-
24	582468101	SHAFT -	1	-
25	582468301	SPACER -	1	-
26	589455201	SPACER -	1	-
27	582468001	SPRING -	1	-
28	510437502	BAFFLE -	1	-
29	539104763	CLIP -	2	-
30	539115620	1/4-20X3/4 CARR BLT -	4	-
31	872140610	BOLT -	3	-
32	510022301	SCREW -	2	-
33	872140628	BOLT -	2	-
34	872140864	BOLT -	1	-
35	874490644	BOLT -	2	-
36	574210601	SCREW -	18	-
37	525612801	SCREW -	2	-
38	521996601	SCREW -	1	-
39	582476401	SCREW -	4	-

Ref.	Article N.	Description	Qty	Kit
40	539130315	BOLT -	9	-
41	539119007	SCREW -	3	-
42	574202001	BOLT -	1	-
43	539913847	BOLT -	1	-
44	521996501	NUT -	10	-
45	539112899	NUT, 5/16-18, NYLOC -	4	-
46	521991101	NUT -	3	-
47	539109332	NUT -	1	-
48	539976978	NUT -	4	-
49	539106504	WASHER -	2	-
50	539109600	WASHER -	9	-
1	582462602	SHAFT -	1	-
2	592654001	ARM -	1	-
2	592654002	ARM -	1	-
3	582465402	ARM -	2	-
4	582463902	ARM -	2	-
5	582462001	ARM -	1	-
6	582462002	ARM -	1	-
7	582464601	ROD -	2	-
8	582472801	ROD -	1	-
9	582471401	ROD -	1	-
10	510408301	PEDAL	1	-

Ref.	Article N.	Description	Qty	Kit
		-		
11	510089501	PAD -	1	-
12	510023902	BLOCK -	4	-
13	582467201	BLOCK -	1	-
14	582466902	BRACKET -	1	-
15	582468902	BRACKET -	2	-
16	589454103	LEVER -	1	-
17	592654101	LEVER -	1	-
18	539109693	LIFT CHAIN - 3 LINK -	2	-
18	589454104	LEVER -	1	-
19	539102641	CHAIN -	2	-
20	582464801	PIVOT -	2	-
21	582763902	PLATE -	1	-
22	589453201	LEVER ASSY -	1	-
23	582469001	SHACKLE -	2	-
24	582464201	SHAFT -	2	-
25	593091801	SPRING -	2	-
26	582471301	SPRING -	1	-
27	582467001	SWIVEL -	1	-
28	582467101	SWIVEL -	1	-
29	582469901	BUSHING -	2	-
30	582469801	BUSHING -	2	-

Ref.	Article N.	Description	Qty	Kit
31	510089201	BUSHING -	5	-
32	539912730	RING -	1	-
33	539990870	RING -	2	-
34	590465501	PIN -	1	-
35	539102889	SPLIT PIN -	2	-
36	582466701	SCREW -	4	-
37	582472601	SCREW -	2	-
38	574202001	BOLT -	2	-
39	539990580	SCREW -	1	-
40	589786001	SCREW -	4	-
41	501064102	SCREW -	3	-
42	501064101	SCREW -	4	-
43	510408201	BOLT -	1	-
44	539101175	SCREW -	4	-
45	582465601	SCREW -	2	-
46	589677701	NUT -	3	-
47	539976978	NUT -	1	-
48	539990546	NUT -	2	-
49	539119124	NUT -	4	-
50	539110340	NUT -	3	-
51	521996501	NUT -	6	-
52	539112899	NUT, 5/16-18, NYLOC	2	-

Ref.	Article N.	Description	Qty	Kit
		-		
53	539132019	NUT -	4	-
54	582466601	NUT -	4	-
55	539108732	NUT 3/8-24 HEX JAM ZD -	2	-
56	539991043	BUSHING -	2	-
1	579866104	SEAT ASSY -	1	-
1	582460103	SEAT *Fits 97058500100*	1	-
2	582478801	BAR -	1	-
3	582478201	BRACKET -	2	-
4	590555002	BRACKET -	1	-
5	590481801	ISOLATOR -	8	-
6	539116377	INSERT -	4	-
7	590373501	LATCH -	1	-
8	590506802	PLATE -	1	-
9	590507201	ROD -	1	-
10	539113952	SPRING -	2	-
11	582478101	NUT -	4	-
12	532192749	SWITCH -	1	-
13	539108392	HCS 5/16-18 X 5/8 GR 5 ZD -	4	-
14	582478901	SCREW -	2	-
15	582478501	SCREW -	2	-
16	539990316	BOLT -	8	-

Ref.	Article N.	Description	Qty	Kit
17	582478601	NUT -	2	-
18	539913847	BOLT -	1	-
19	539112899	NUT, 5/16-18, NYLOC -	6	-
20	522023401	WASHER -	2	-
21	532413524	WASHER -	8	-
22	539990118	WASHER -	2	-
23	539990187	WASHER -	4	-
24	579866109	SEAT ASSY *Knob*	1	-
25	579866108	SEAT ASSY *REPLACEMENT PAD ONLY*	2	-
1	580942201	HUB -	3	-
2	580942101	SHAFT -	3	-
3	580942701	V-RING -	6	-
4	580942601	SEAL -	6	-
5	583911101	BEARING KIT *ALSO ORDER TOOL KIT*	3	-
6	580942301	SPACER -	3	-
7	580942501	CARRIER -	3	-
8	539976998	NIPPLE -	3	-
9	539977326	FITTING -	3	-
10	539130653	NUT -	3	-
11	580943306	SPINDLE -	3	-
12	580942801	SHIM *For 967678601-00, 967678701-00*	1	-
13	574754201	KIT	1	-

Ref.	Article N.	Description	Qty	Kit
		NOT SHOWN		
1	582475501	LEVER *LEFT*	1	-
2	582475502	LEVER *RIGHT*	1	-
3	596925601	ROD *RIGHT SIDE ASSY*	1	-
3	596925701	ROD *LEFT SIDE ASSY*	1	-
3	598852501	SERVICE KIT *COUPLER KIT. CONTAINS (2) COUPLERS THAT FITS BOTH LH/RH SIDES. REF # 4 SCREWS INTO THIS COUPLER*	1	-
4	588692502	ROD *ROD.END.MALE.LH THREAD*	2	-
5	579764601	JOINT *JOINT.RH.THREAD.FEMALE.5/16*	2	-
6	539923515	SPACER	2	-
7	597744702	BRACKET	2	-
8	592653801	CARRIER *w/BEARINGS LEFT*	1	-
8	592653802	CARRIER *w/BEARINGS RIGHT*	1	-
9	592653901	CARRIER	2	-
12	582477802	BRACKET *LEFT*	1	-
12	582477804	BRACKET *RIGHT*	1	-
13	582476902	BRACKET	2	-
14	582475102	BRACKET	4	-
15	587225301	PIN	2	-
16	582551901	CLIP	2	-
17	588775401	DAMPER	2	-
18	582477401	PIN	2	-
19	589505102	PIVOT	2	-
20	589489601	RETAINER	2	-
21	589500902	SWITCH	2	-
22	582475001	SPACER	2	-
23	582711303	SPACER	2	-
24	582477001	SPRING	4	-
25	532151332	SPRING	2	-
26	582477702	SPRING	2	-

Ref.	Article N.	Description	Qty	Kit
27	597744501	ADAPTER	2	-
28	582477501	CABLE	2	-
29	539110607	STUD	4	-
30	582477602	BRACKET	2	-
31	582476801	BEARING	4	-
32	539131518	BEARING	8	-
33	532170165	BOLT	4	-
34	525544001	BOLT	4	-
35	525465402	SCREW	2	-
36	539976934	SCREW	4	-
37	582477102	SCREW	4	-
38	582476401	SCREW	4	-
39	596240801	BOLT	2	-
40	595901501	BOLT	4	-
41	577117701	SCREW	2	-
42	589505602	SCREW	2	-
44	594944401	NUT	14	-
45	596040901	HEXAGON NUT	4	-
46	521996502	NUT	6	-
47	539990184	NUT	4	-
48	596134901	WASHER	2	-
49	539990187	WASHER	4	-
50	596204101	WASHER	2	-
51	522023401	WASHER	4	-
1	582475501	LEVER -	1	-
2	582475502	LEVER -	1	-
3	501567001	ROD *For 967930101-00*	1	-
3	592653701	CONTROL *LEFT For 96767860300, 96767860200, 96767860101, 967678701. 967678601*	1	-
3	592653702	CONTROL *RIGHT*	1	-
4	588692502	ROD -	2	-
5	579764601	JOINT -	2	-
6	582484001	BELLOWS *For 967930101-00*	1	-

Ref.	Article N.	Description	Qty	Kit
6	591193301	SERVICE KIT *For 96767860300, 96767860200, 96767860101, 967678701-00, 967678601-00*	1	-
7	582484101	BELLOWS *For 967930101-00*	1	-
7	591193302	SERVICE KIT *For 96767860300, 96767860200, 96767860101, 967678701-00, 967678601-00*	1	-
8	592653801	CARRIER *w/BEARINGS LEFT/ For 96767860300, 96767860200, 96767860101, 967678701-00, 967678601-00*	1	-
8	592653802	CARRIER *w/BEARINGS LEFT/ For 967930101-00*	1	-
9	592653901	CARRIER -	2	-
10	592724002	CONTROL -	1	-
10	592724001	CONTROL -	1	-
11	592653501	PARKING BRAKE -	1	-
12	582477802	BRACKET *LEFT*	1	-
12	582477804	BRACKET *RIGHT*	1	-
13	582476901	BRACKET -	2	-
14	582475102	BRACKET -	4	-
15	587225301	PIN -	2	-
16	582551901	CLIP -	2	-
17	588775401	DAMPER -	2	-
18	582477401	PIN -	2	-
19	589505101	PIVOT -	2	-
20	589489601	RETAINER -	2	-
21	589500901	SWITCH -	2	-
22	582475001	SPACER -	2	-

Ref.	Article N.	Description	Qty	Kit
23	582711303	SPACER -	2	-
24	582477001	SPRING -	4	-
25	532151332	SPRING -	2	-
26	582477701	SPRING -	2	-
27	582477201	YOKE -	2	-
28	582477501	CABLE -	2	-
29	539110607	STUD -	4	-
30	582477601	BRACKET -	2	-
31	582476801	BEARING -	4	-
32	539131518	BEARING -	8	-
33	539110303	BOLT -	4	-
34	525544001	BOLT -	4	-
35	525465401	SCREW -	2	-
36	539976934	SCREW -	4	-
37	582477101	SCREW -	4	-
38	582476401	SCREW -	2	-
39	539115574	EYE BOLT -	2	-
40	539990208	SCREW -	4	-
41	577117701	SCREW -	6	-
42	589505601	SCREW -	2	-
43	582482901	RIVET -	12	-
44	539112899	NUT, 5/16-18, NYLOC	14	-

Ref.	Article N.	Description	Qty	Kit
		-		
45	539990223	NUT -	4	-
46	521996501	NUT -	6	-
47	539990184	NUT -	4	-
48	539990692	WASHER -	2	-
49	539990187	WASHER -	4	-
50	819111116	WASHER -	2	-
51	522023401	WASHER -	2	-
1	599893003	COVER -	1	-
2	599893004	COVER -	1	-
3	596564002	BOLT -	4	-
1	599156701	TIRE *fits 967669801-00, 967699802-00*	2	-
1	510154601	TIRE *Use From SN: 060117F000001 To SN: 090820F999999*	2	-
2	539105152	TIRE *24x12-12 Tire Only*	2	-
2	510154502	WHEEL RIM *Rim Only*	2	-
2	510154501	TIRE *Tire & Rim Assembly*	2	-
3	525611902	FORK -	2	-
4	510034001	CAP -	2	-
5	510034301	SEAL -	2	-
6	510034403	BEARING -	4	-
7	596623501	VALVE -	2	-
8	590690701	SPACER *Use From SN: 060117F000001 To SN: 090820F999999*	4	-

Ref.	Article N.	Description	Qty	Kit
9	590704902	SPACER *Use From SN: 060117F000001 To SN: 090820F999999*	2	-
10	594946501	BOLT -	2	-
11	522842602	NUT -	2	-
12	587653902	NUT -	8	-
13	873930800	NUT *For 967678802-01, 967678801-01*	2	-
13	521991102	NUT *For 96793040300, 967669703-01*	2	-
14	595086801	WASHER -	2	-
15	574824701	WASHER -	2	-
16	539102484	BEARING *Use after SN: 090920F000001*	4	-
17	539105307	ROLLER BEARING *Use after SN: 090920F000001*	4	-
18	539912234	VALVE *Use after SN: 090920F000001*	2	-
19	599405101	SHIM *Use after SN: 090920F000001*	2	-
20	539133007	WASHER *Use after SN: 090920F000001*	2	-
21	539105522	TIRE *13X6.5-6 Tire Only Use After SN: 090920F000001*	2	-
21	581199501	WHEEL ASSY *Use after SN: 090920F000001*	2	-
22	575334901	SPACER *Use after SN: 090920F000001*	2	-
23	596623501	VALVE -	2	-
24	597383801	SERVICE KIT *Use From SN: 060117F000001 To SN: 090820F999999*	2	-
1	597383801	SERVICE KIT -	1	-
1	510154601	TIRE -	2	-
2	522905101	TIRE -	2	-
3	525611902	FORK	2	-

Ref.	Article N.	Description	Qty	Kit
		-		
4	510034001	CAP -	2	-
4	522905102	TIRE -	2	-
5	510034301	SEAL -	2	-
6	510034403	BEARING -	4	-
7	539101474	NIPPLE -	2	-
8	590690701	SPACER -	4	-
9	590704901	SPACER -	2	-
10	539105517	BOLT -	2	-
11	522842601	NUT -	2	-
12	587653902	NUT -	8	-
13	873930800	NUT -	2	-
14	539990250	WASHER -	2	-
15	574824701	WASHER -	2	-
1	591359801	FRAME *w/ SAFETY DECALS*	1	-
2	522675702	BUMPER -	1	-
3	587898002	GUARD -	1	-
4	589808802	BRACKET -	2	-
5	589807202	BRACKET -	1	-
6	589448202	BRACKET -	1	-
7	589448204	BRACKET -	1	-
8	582481101	BRACKET -	2	-

Ref.	Article N.	Description	Qty	Kit
9	582481002	PANEL *For 96767860300, 96767860200, 96767860101, 967678701-00, 967678601-00*	1	-
9	595327502	PANEL *For 967930101-00*	1	-
10	582481004	PANEL -	1	-
11	582480803	PANEL -	1	-
12	582480804	PANEL -	1	-
13	589304602	PLATE -	1	-
14	574228602	PLATE *For 96767860300, 96767860200, 96767860101, 967678701-00, 967678601-00*	1	-
14	596694102	PLATE *For 967930101-00*	1	-
15	582478701	BUMPER -	2	-
16	575811501	BUMPER -	2	-
17	522801401	BUMPER -	4	-
18	539102587	ABSORBER -	2	-
19	589745202	COVER -	1	-
20	582480502	CROSS MEMBER -	1	-
21	589744001	ISOLATOR -	2	-
22	539104411	KNOB -	1	-
23	591344501	KNOB -	2	-
24	591101701	PIN -	2	-
25	591101601	PIN -	2	-
26	582460702	PLATE -	1	-
27	582460606	BRACKET *MX-14*	1	-
28	589500701	BRACKET	1	-

Ref.	Article N.	Description	Qty	Kit
		-		
29	539104763	CLIP -	7	-
30	589806801	NUT -	2	-
31	539111028	NUTSERT 5/16-18 THICK GRIP -	2	-
32	525612801	SCREW -	4	-
33	574233801	SCREW -	2	-
34	525544001	BOLT -	2	-
35	539113226	BOLT -	4	-
36	577117701	SCREW -	4	-
37	539100145	BOLT -	2	-
38	872140404	BOLT -	4	-
39	872140406	BOLT *For 96767860300, 96767860200, 96767860101, 967678701-00, 967678601-00*	2	-
39	539115620	1/4-20X3/4 CARR BLT *For 967930101-00*	2	-
40	539990316	BOLT -	14	-
41	539990208	SCREW -	2	-
42	539110303	BOLT -	4	-
43	580754601	BOLT -	6	-
44	589797201	SCREW -	2	-
45	817490408	SCREW -	2	-
46	585986101	BOLT -	2	-
47	525829101	NUT -	6	-
48	539976978	NUT -	6	-

Ref.	Article N.	Description	Qty	Kit
49	521996501	NUT -	12	-
50	539112899	NUT, 5/16-18, NYLOC -	21	-
51	539102653	WASHER -	4	-
52	539108120	NUT *For 967930101-00*	1	-
53	583611601	BOLT *For 967930101-00*	1	-
54	591176601	BOLT *For 967930101-00*	1	-
58	590877803	ROPS *ROPS ASSY*	1	-

MOWER DECK \/ CUTTING DECK

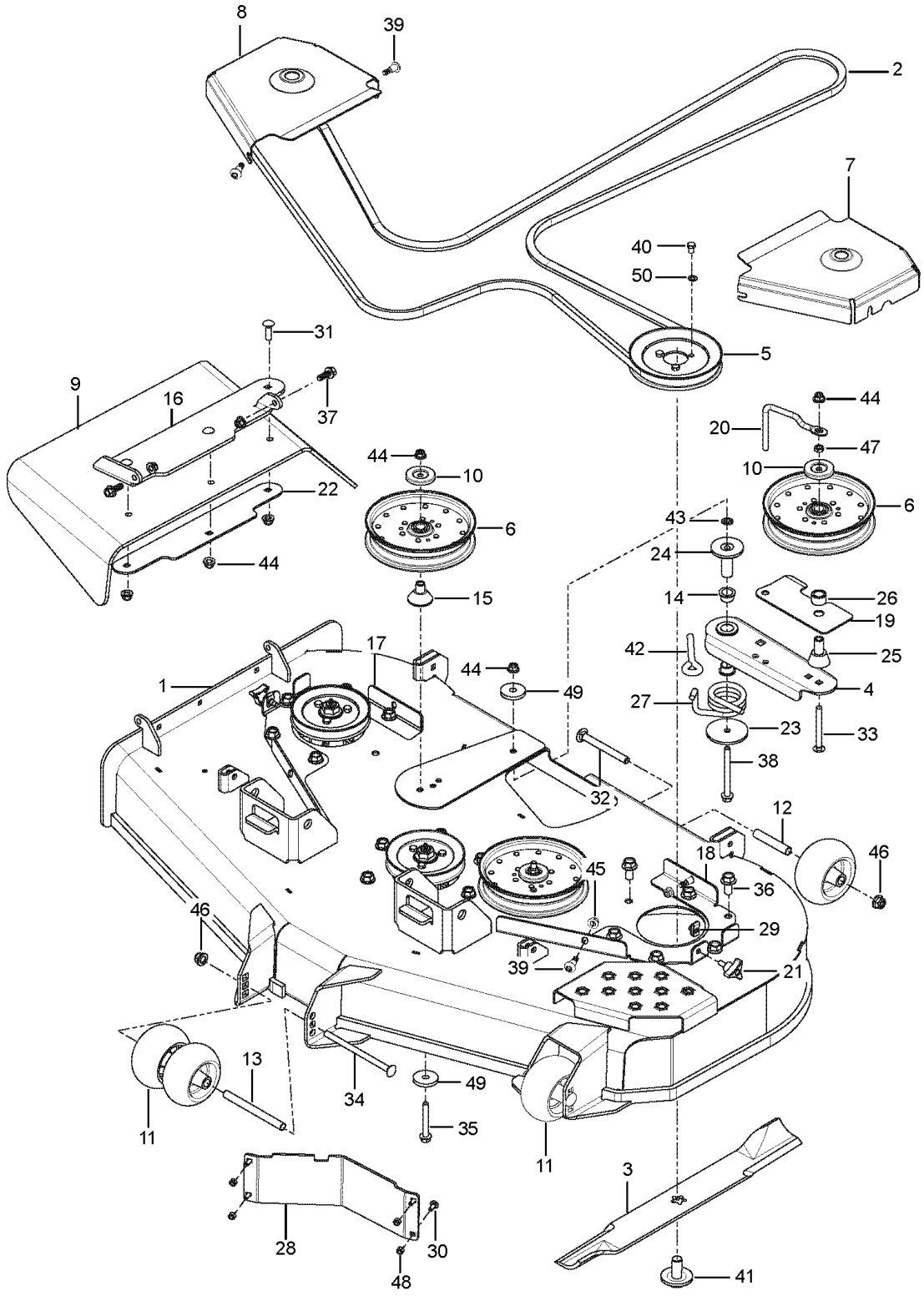

Ref.	Article N.	Description	Qty	Kit
1	582483902	PANEL	1	-
2	582483602	PANEL	1	-
3	586161801	HOUR METER	1	-
4	574455401	SWITCH	1	-
5	589887201	SWITCH	1	-

Ref.	Article N.	Description	Qty	Kit
6	574455501	KEY	1	-
7	581878301	LIGHT *For 967930101-00, 967678701-00*	1	-
7	574206901	CABLE *CHOKE/ For 96767860300, 96767860200, 96767860101*	1	-
8	582120301	THROTTLE CONTROL *46*	1	-
9	589819501	BATTERY *MX-9/ For 967930101-00, 967678701-00, 967678601-00*	1	-
9	589819502	BATTERY *MX-12/ For 967930101-00, 967678701-00, 967678601-00*	1	-
9	589819503	BATTERY *MX-14/ For 96767860300, 96767860200, 96767860101*	1	-
9	582460606	BRACKET *MX-14*	1	-
9	596990201	SERVICE KIT *MX-12 Bracket (Battery not included) For 967930101-00, 967678701-00, 967678601-00*	1	-
10	539103178	NUT CAP	1	-
11	539132624	KNOB	1	-
12	539102759	INSULATOR	2	-
13	592872701	FUEL GAUGE	2	-
14	539114341	SCREW	6	-
15	532199855	SCREW	2	-
16	582460801	SCREW	2	-
21	593777801	HARNESS *FOR CARB ENGINES*	1	-
21	593777803	HARNESS *FOR KOHLER & YAMAHA EFI*	1	-
22	589838501	HARNESS	1	-
23	574514001	TIMER *NOT SHOWN*	1	-
24	590632101	CABLE *NOT SHOWN*	1	-
25	539101714	SOLENOID *NOT SHOWN (SOLENOID KAW FX)*	1	-
1	574437301	DECAL *BELT ROUTING*	1	-
2	590209401	DECAL *MOTION/BRAKE RIGHT*	1	-
3	590209501	DECAL *MOTION_BRAKE_LEFT*	1	-

Ref.	Article N.	Description	Qty	Kit
3	590807601	DECAL *Z554X*	1	-
4	581724301	DECAL *NO STEP*	2	-
5	539105745	DECAL *BATTERY WARNING*	1	-
6	539105744	DECAL *DANGER BELT*	2	-
7	581724401	DECAL *DEFLECTOR WARNING*	1	-
8	532424102	DECAL *SPARK ARRESTOR*	1	-
9	574455001	DECAL *CROWN LARGE*	1	-
10	574569006	DECAL *ROPS/ For 96767860300, 96767860200,*	1	-
10	593011101	DECAL *ROPS/ For 967930101-00, 967678701-00, 967678601-00*	1	-
11	574569002	DECAL *ROPS WARNING*	1	-
12	574569401	DECAL *FUSE*	1	-
13	584904601	DECAL *DECK/DEFLECT WARNING*	1	-
14	532428676	DECAL *CROWN SMALL*	1	-
15	590799301	DECAL *DECK HEIGHT*	1	-
16	590210001	DECAL *COMMERCIAL*	1	-
17	590846801	DECAL *MAINTANCE/SERVICE*	1	-
18	590210301	DECAL *CONTROL PANEL RIGHT - CHOKE /For 96767860300, 96767860200, 96767860101*	1	-
18	590210302	DECAL *CONTROL PANEL RIGHT-EFI/ For 967930101-00, 967678701-00, 967678601-00*	1	-
19	590210501	DECAL *CONTROL PANEL LEFT*	1	-
20	590209701	DECAL *TRANSMISSION WARNING*	1	-
21	590209202	DECAL	1	-

Ref.	Article N.	Description	Qty	Kit
		START W/ CHOKE		
22	577469001	DECAL *EMBLEM*	2	-
30	577150101	DECAL *FUEL - NOT SHOWN*	1	-
31	590807801	DECAL *Z560X / For 967678601-00, 967678701-00*	1	-
32	590807901	DECAL *Z572X / For 967678601-00, 967678701-00*	1	-
1	582733302	PLATE -	1	-
2	525749501	CLUTCH -	1	-
3	522676702	STOP -	1	-
4	539118911	NIPPLE -	1	-
5	522837001	PLUG -	1	-
6	510019801	PULLEY -	1	-
7	539119680	ADAPTER -	1	-
8	539105072	90DEG.ELBOW 3/8NPT -	1	-
9	525749901	KEY -	1	-
10	587886001	MUFFLER -	1	-
11	539109618	O-RING -	1	-
12	505280001	TIE WRAP -	1	-
13	581332801	BOLT -	1	-
14	574233801	SCREW -	4	-
15	539990563	SCREW -	4	-
16	874780716	BOLT -	1	-
17	539990208	SCREW -	2	-

Ref.	Article N.	Description	Qty	Kit
18	539102933	SCREW -	2	-
19	539108120	NUT -	1	-
20	539112899	NUT, 5/16-18, NYLOC -	8	-
21	539102582	NUT -	1	-
22	539102593	WASHER -	4	-
23	539990247	WASHER -	1	-
24	539125626	WASHER -	1	-
25	586839701	GASKET *NOT SHOWN*	2	-
1	582483105	FUEL TANK ASSY *For 96767860300, 96767860200, 96767860101, 967678701-00, 967678601-00*	1	-
1	590680505	TANK UNIT ASSY *For 967930101-00*	1	-
2	582481705	FUEL TANK ASSY *For 96767860300, 96767860200, 96767860101, 967678701-00, 967678601-00*	1	-
2	590680405	TANK UNIT ASSY *For 967930101-00*	1	-
3	587044550	HOSE -	1	-
4	587044526	HOSE -	1	-
5	587044517	HOSE -	1	-
6	587044846	HOSE -	1	-
7	587044808	HOSE *For 967930101-00*	1	-
7	587044833	HOSE *For 96767860300, 96767860200, 96767860101, 967678701-00, 967678601-00*	1	-
8	587044824	HOSE -	1	-
9	574206602	FITTING -	1	-
10	575018101	CAP -	2	-
11	582483301	GUARD	1	-

Ref.	Article N.	Description	Qty	Kit
		-		
12	590638801	SENSOR -	2	-
13	576618101	TANK VENT -	2	-
14	539102679	VALVE -	1	-
15	582482301	GUARD -	1	-
15	525865402	TUBE ASSY -	1	-
16	532003645	BUSHING -	2	-
17	590209101	GROMMET -	2	-
18	584648201	GROMMET -	2	-
19	582481502	BRACKET -	2	-
20	582481602	BRACKET -	2	-
20	525865403	TUBE ASSY -	1	-
21	582483401	COVER -	1	-
22	539912222	CLAMP -	6	-
23	575436501	CLAMP -	6	-
24	582482601	CLIP -	8	-
25	505280001	TIE WRAP -	5	-
26	874490548	BOLT -	6	-
27	582482401	COVER -	1	-
27	590257301	SCREW -	6	-
28	817490516	SCREW -	6	-
29	582484201	SCREW -	8	-

Ref.	Article N.	Description	Qty	Kit
30	539112899	NUT, 5/16-18, NYLOC -	20	-
31	532126684	SHIM -	6	-
1	591359901	SHIELD -	1	-
2	582461206	BRACKET -	1	-
3	539102587	ABSORBER -	4	-
4	582461701	HOLDER ASSY -	3	-
5	582461303	ROD -	2	-
6	874780412	BOLT -	3	-
7	874490548	BOLT -	4	-
8	503200001	SCREW EHHFM -	3	-
9	587592101	SCREW -	4	-
10	521991101	NUT -	2	-
11	539112899	NUT, 5/16-18, NYLOC -	8	-
12	532191730	NUT -	3	-
13	731231405	HEXAGON NUT -	3	-
14	873350800	NUT -	2	-
1	582463102	ARM -	1	-
2	501603701	BEARING -	2	-
3	582479102	BRACKET -	4	-
4	582480101	CLAMP -	4	-
5	529311401	FITTING -	2	-
6	582479404	FRAME	1	-

Ref.	Article N.	Description	Qty	Kit
		-		
7	582480204	HOSE -	2	-
8	586933802	MOUNT -	1	-
9	582468101	SHAFT -	1	-
10	587654101	PULLEY -	2	-
11	582716201	ROD END -	1	-
12	582468401	SPRING -	1	-
13	574499201	TANK -	2	-
14	582480001	TRANSMISSION -	1	-
15	582480002	TRANSMISSION -	1	-
16	576127201	FILTER -	1	-
17	582480402	V-BELT -	1	-
18	874490652	SCREW -	1	-
19	574210601	SCREW -	8	-
20	525828901	BOLT *For 96767860300, 96767860200, 96767860101*	8	-
20	874490848	SCREW *For 967930101-00, 967678701-00, 967678601-00*	8	-
21	539100145	BOLT -	2	-
22	539990645	BOLT -	2	-
23	532165857	SCREW -	4	-
24	539913847	BOLT -	1	-
25	521991101	NUT -	8	-
26	521996501	NUT -	6	-

Ref.	Article N.	Description	Qty	Kit
27	819133210	WASHER -	1	-
1	591359704	CUTTING DECK -	1	-
2	588264805	DRIVE BELT -	1	-
3	575265901	BLADE -	3	-
4	582462702	ARM -	1	-
5	521979701	PULLEY -	3	-
6	510015101	PULLEY -	3	-
7	582463003	PULLEY -	1	-
8	582463006	PULLEY -	1	-
9	582468801	CHUTE -	1	-
10	510254501	SHIELD -	3	-
11	574169601	ROLLER -	4	-
12	574196401	TUBE -	2	-
13	574196501	TUBE -	1	-
14	539131518	BEARING -	2	-
15	510263701	BEARING -	2	-
16	582467302	BRACKET -	1	-
17	582463203	BRACKET *For 96767860300, 96767860200, 96767860101, 967678701-00, 967678601-00*	1	-
17	582463207	BRACKET *For 967930101-00*	1	-
18	582463204	BRACKET *For 96767860300, 96767860200, 96767860101, 967678701-00, 967678601-00*	1	-
18	582463208	BRACKET *For 967930101-00*	1	-
19	582472502	BELT GUARD	1	-

Ref.	Article N.	Description	Qty	Kit
		For 96767860300, 96767860200, 96767860101, 967678701-00, 967678601-00		
19	594913302	BELT GUIDE *For 967930101-00*	1	-
20	582470201	KEEPER -	1	-
21	539104411	KNOB -	2	-
22	590523702	PLATE -	1	-
23	582466401	PLATE -	1	-
24	582468101	SHAFT -	1	-
25	582468301	SPACER -	1	-
26	589455201	SPACER -	1	-
27	582468001	SPRING -	1	-
28	510437502	BAFFLE -	1	-
29	539104763	CLIP -	2	-
30	539115620	1/4-20X3/4 CARR BLT -	4	-
31	872140610	BOLT -	3	-
32	510022301	SCREW -	2	-
33	872140628	BOLT -	2	-
34	872140864	BOLT -	1	-
35	874490644	BOLT -	2	-
36	574210601	SCREW -	18	-
37	525612801	SCREW -	2	-
38	521996601	SCREW -	1	-
39	582476401	SCREW -	4	-

Ref.	Article N.	Description	Qty	Kit
40	539130315	BOLT -	9	-
41	539119007	SCREW -	3	-
42	574202001	BOLT -	1	-
43	539913847	BOLT -	1	-
44	521996501	NUT -	10	-
45	539112899	NUT, 5/16-18, NYLOC -	4	-
46	521991101	NUT -	3	-
47	539109332	NUT -	1	-
48	539976978	NUT -	4	-
49	539106504	WASHER -	2	-
50	539109600	WASHER -	9	-
1	582462602	SHAFT -	1	-
2	592654001	ARM -	1	-
2	592654002	ARM -	1	-
3	582465402	ARM -	2	-
4	582463902	ARM -	2	-
5	582462001	ARM -	1	-
6	582462002	ARM -	1	-
7	582464601	ROD -	2	-
8	582472801	ROD -	1	-
9	582471401	ROD -	1	-
10	510408301	PEDAL	1	-

Ref.	Article N.	Description	Qty	Kit
		-		
11	510089501	PAD -	1	-
12	510023902	BLOCK -	4	-
13	582467201	BLOCK -	1	-
14	582466902	BRACKET -	1	-
15	582468902	BRACKET -	2	-
16	589454103	LEVER -	1	-
17	592654101	LEVER -	1	-
18	539109693	LIFT CHAIN - 3 LINK -	2	-
18	589454104	LEVER -	1	-
19	539102641	CHAIN -	2	-
20	582464801	PIVOT -	2	-
21	582763902	PLATE -	1	-
22	589453201	LEVER ASSY -	1	-
23	582469001	SHACKLE -	2	-
24	582464201	SHAFT -	2	-
25	593091801	SPRING -	2	-
26	582471301	SPRING -	1	-
27	582467001	SWIVEL -	1	-
28	582467101	SWIVEL -	1	-
29	582469901	BUSHING -	2	-
30	582469801	BUSHING -	2	-

Ref.	Article N.	Description	Qty	Kit
31	510089201	BUSHING -	5	-
32	539912730	RING -	1	-
33	539990870	RING -	2	-
34	590465501	PIN -	1	-
35	539102889	SPLIT PIN -	2	-
36	582466701	SCREW -	4	-
37	582472601	SCREW -	2	-
38	574202001	BOLT -	2	-
39	539990580	SCREW -	1	-
40	589786001	SCREW -	4	-
41	501064102	SCREW -	3	-
42	501064101	SCREW -	4	-
43	510408201	BOLT -	1	-
44	539101175	SCREW -	4	-
45	582465601	SCREW -	2	-
46	589677701	NUT -	3	-
47	539976978	NUT -	1	-
48	539990546	NUT -	2	-
49	539119124	NUT -	4	-
50	539110340	NUT -	3	-
51	521996501	NUT -	6	-
52	539112899	NUT, 5/16-18, NYLOC	2	-

Ref.	Article N.	Description	Qty	Kit
		-		
53	539132019	NUT -	4	-
54	582466601	NUT -	4	-
55	539108732	NUT 3/8-24 HEX JAM ZD -	2	-
56	539991043	BUSHING -	2	-
1	579866104	SEAT ASSY -	1	-
1	582460103	SEAT *Fits 97058500100*	1	-
2	582478801	BAR -	1	-
3	582478201	BRACKET -	2	-
4	590555002	BRACKET -	1	-
5	590481801	ISOLATOR -	8	-
6	539116377	INSERT -	4	-
7	590373501	LATCH -	1	-
8	590506802	PLATE -	1	-
9	590507201	ROD -	1	-
10	539113952	SPRING -	2	-
11	582478101	NUT -	4	-
12	532192749	SWITCH -	1	-
13	539108392	HCS 5/16-18 X 5/8 GR 5 ZD -	4	-
14	582478901	SCREW -	2	-
15	582478501	SCREW -	2	-
16	539990316	BOLT -	8	-

Ref.	Article N.	Description	Qty	Kit
17	582478601	NUT -	2	-
18	539913847	BOLT -	1	-
19	539112899	NUT, 5/16-18, NYLOC -	6	-
20	522023401	WASHER -	2	-
21	532413524	WASHER -	8	-
22	539990118	WASHER -	2	-
23	539990187	WASHER -	4	-
24	579866109	SEAT ASSY *Knob*	1	-
25	579866108	SEAT ASSY *REPLACEMENT PAD ONLY*	2	-
1	580942201	HUB -	3	-
2	580942101	SHAFT -	3	-
3	580942701	V-RING -	6	-
4	580942601	SEAL -	6	-
5	583911101	BEARING KIT *ALSO ORDER TOOL KIT*	3	-
6	580942301	SPACER -	3	-
7	580942501	CARRIER -	3	-
8	539976998	NIPPLE -	3	-
9	539977326	FITTING -	3	-
10	539130653	NUT -	3	-
11	580943306	SPINDLE -	3	-
12	580942801	SHIM *For 967678601-00, 967678701-00*	1	-
13	574754201	KIT	1	-

Ref.	Article N.	Description	Qty	Kit
		NOT SHOWN		
1	582475501	LEVER *LEFT*	1	-
2	582475502	LEVER *RIGHT*	1	-
3	596925601	ROD *RIGHT SIDE ASSY*	1	-
3	596925701	ROD *LEFT SIDE ASSY*	1	-
3	598852501	SERVICE KIT *COUPLER KIT. CONTAINS (2) COUPLERS THAT FITS BOTH LH/RH SIDES. REF # 4 SCREWS INTO THIS COUPLER*	1	-
4	588692502	ROD *ROD.END.MALE.LH THREAD*	2	-
5	579764601	JOINT *JOINT.RH.THREAD.FEMALE.5/16*	2	-
6	539923515	SPACER	2	-
7	597744702	BRACKET	2	-
8	592653801	CARRIER *w/BEARINGS LEFT*	1	-
8	592653802	CARRIER *w/BEARINGS RIGHT*	1	-
9	592653901	CARRIER	2	-
12	582477802	BRACKET *LEFT*	1	-
12	582477804	BRACKET *RIGHT*	1	-
13	582476902	BRACKET	2	-
14	582475102	BRACKET	4	-
15	587225301	PIN	2	-
16	582551901	CLIP	2	-
17	588775401	DAMPER	2	-
18	582477401	PIN	2	-
19	589505102	PIVOT	2	-
20	589489601	RETAINER	2	-
21	589500902	SWITCH	2	-
22	582475001	SPACER	2	-
23	582711303	SPACER	2	-
24	582477001	SPRING	4	-
25	532151332	SPRING	2	-
26	582477702	SPRING	2	-

Ref.	Article N.	Description	Qty	Kit
27	597744501	ADAPTER	2	-
28	582477501	CABLE	2	-
29	539110607	STUD	4	-
30	582477602	BRACKET	2	-
31	582476801	BEARING	4	-
32	539131518	BEARING	8	-
33	532170165	BOLT	4	-
34	525544001	BOLT	4	-
35	525465402	SCREW	2	-
36	539976934	SCREW	4	-
37	582477102	SCREW	4	-
38	582476401	SCREW	4	-
39	596240801	BOLT	2	-
40	595901501	BOLT	4	-
41	577117701	SCREW	2	-
42	589505602	SCREW	2	-
44	594944401	NUT	14	-
45	596040901	HEXAGON NUT	4	-
46	521996502	NUT	6	-
47	539990184	NUT	4	-
48	596134901	WASHER	2	-
49	539990187	WASHER	4	-
50	596204101	WASHER	2	-
51	522023401	WASHER	4	-
1	582475501	LEVER -	1	-
2	582475502	LEVER -	1	-
3	501567001	ROD *For 967930101-00*	1	-
3	592653701	CONTROL *LEFT For 96767860300, 96767860200, 96767860101, 967678701. 967678601*	1	-
3	592653702	CONTROL *RIGHT*	1	-
4	588692502	ROD -	2	-
5	579764601	JOINT -	2	-
6	582484001	BELLOWS *For 967930101-00*	1	-

Ref.	Article N.	Description	Qty	Kit
6	591193301	SERVICE KIT *For 96767860300, 96767860200, 96767860101, 967678701-00, 967678601-00*	1	-
7	582484101	BELLOWS *For 967930101-00*	1	-
7	591193302	SERVICE KIT *For 96767860300, 96767860200, 96767860101, 967678701-00, 967678601-00*	1	-
8	592653801	CARRIER *w/BEARINGS LEFT/ For 96767860300, 96767860200, 96767860101, 967678701-00, 967678601-00*	1	-
8	592653802	CARRIER *w/BEARINGS LEFT/ For 967930101-00*	1	-
9	592653901	CARRIER -	2	-
10	592724002	CONTROL -	1	-
10	592724001	CONTROL -	1	-
11	592653501	PARKING BRAKE -	1	-
12	582477802	BRACKET *LEFT*	1	-
12	582477804	BRACKET *RIGHT*	1	-
13	582476901	BRACKET -	2	-
14	582475102	BRACKET -	4	-
15	587225301	PIN -	2	-
16	582551901	CLIP -	2	-
17	588775401	DAMPER -	2	-
18	582477401	PIN -	2	-
19	589505101	PIVOT -	2	-
20	589489601	RETAINER -	2	-
21	589500901	SWITCH -	2	-
22	582475001	SPACER -	2	-

Ref.	Article N.	Description	Qty	Kit
23	582711303	SPACER -	2	-
24	582477001	SPRING -	4	-
25	532151332	SPRING -	2	-
26	582477701	SPRING -	2	-
27	582477201	YOKE -	2	-
28	582477501	CABLE -	2	-
29	539110607	STUD -	4	-
30	582477601	BRACKET -	2	-
31	582476801	BEARING -	4	-
32	539131518	BEARING -	8	-
33	539110303	BOLT -	4	-
34	525544001	BOLT -	4	-
35	525465401	SCREW -	2	-
36	539976934	SCREW -	4	-
37	582477101	SCREW -	4	-
38	582476401	SCREW -	2	-
39	539115574	EYE BOLT -	2	-
40	539990208	SCREW -	4	-
41	577117701	SCREW -	6	-
42	589505601	SCREW -	2	-
43	582482901	RIVET -	12	-
44	539112899	NUT, 5/16-18, NYLOC	14	-

Ref.	Article N.	Description	Qty	Kit
		-		
45	539990223	NUT -	4	-
46	521996501	NUT -	6	-
47	539990184	NUT -	4	-
48	539990692	WASHER -	2	-
49	539990187	WASHER -	4	-
50	819111116	WASHER -	2	-
51	522023401	WASHER -	2	-
1	599893003	COVER -	1	-
2	599893004	COVER -	1	-
3	596564002	BOLT -	4	-
1	599156701	TIRE *fits 967669801-00, 967699802-00*	2	-
1	510154601	TIRE *Use From SN: 060117F000001 To SN: 090820F999999*	2	-
2	539105152	TIRE *24x12-12 Tire Only*	2	-
2	510154502	WHEEL RIM *Rim Only*	2	-
2	510154501	TIRE *Tire & Rim Assembly*	2	-
3	525611902	FORK -	2	-
4	510034001	CAP -	2	-
5	510034301	SEAL -	2	-
6	510034403	BEARING -	4	-
7	596623501	VALVE -	2	-
8	590690701	SPACER *Use From SN: 060117F000001 To SN: 090820F999999*	4	-

Ref.	Article N.	Description	Qty	Kit
9	590704902	SPACER *Use From SN: 060117F000001 To SN: 090820F999999*	2	-
10	594946501	BOLT -	2	-
11	522842602	NUT -	2	-
12	587653902	NUT -	8	-
13	873930800	NUT *For 967678802-01, 967678801-01*	2	-
13	521991102	NUT *For 96793040300, 967669703-01*	2	-
14	595086801	WASHER -	2	-
15	574824701	WASHER -	2	-
16	539102484	BEARING *Use after SN: 090920F000001*	4	-
17	539105307	ROLLER BEARING *Use after SN: 090920F000001*	4	-
18	539912234	VALVE *Use after SN: 090920F000001*	2	-
19	599405101	SHIM *Use after SN: 090920F000001*	2	-
20	539133007	WASHER *Use after SN: 090920F000001*	2	-
21	539105522	TIRE *13X6.5-6 Tire Only Use After SN: 090920F000001*	2	-
21	581199501	WHEEL ASSY *Use after SN: 090920F000001*	2	-
22	575334901	SPACER *Use after SN: 090920F000001*	2	-
23	596623501	VALVE -	2	-
24	597383801	SERVICE KIT *Use From SN: 060117F000001 To SN: 090820F999999*	2	-
1	597383801	SERVICE KIT -	1	-
1	510154601	TIRE -	2	-
2	522905101	TIRE -	2	-
3	525611902	FORK	2	-

Ref.	Article N.	Description	Qty	Kit
		-		
4	510034001	CAP -	2	-
4	522905102	TIRE -	2	-
5	510034301	SEAL -	2	-
6	510034403	BEARING -	4	-
7	539101474	NIPPLE -	2	-
8	590690701	SPACER -	4	-
9	590704901	SPACER -	2	-
10	539105517	BOLT -	2	-
11	522842601	NUT -	2	-
12	587653902	NUT -	8	-
13	873930800	NUT -	2	-
14	539990250	WASHER -	2	-
15	574824701	WASHER -	2	-
1	591359801	FRAME *w/ SAFETY DECALS*	1	-
2	522675702	BUMPER -	1	-
3	587898002	GUARD -	1	-
4	589808802	BRACKET -	2	-
5	589807202	BRACKET -	1	-
6	589448202	BRACKET -	1	-
7	589448204	BRACKET -	1	-
8	582481101	BRACKET -	2	-

Ref.	Article N.	Description	Qty	Kit
9	582481002	PANEL *For 96767860300, 96767860200, 96767860101, 967678701-00, 967678601-00*	1	-
9	595327502	PANEL *For 967930101-00*	1	-
10	582481004	PANEL -	1	-
11	582480803	PANEL -	1	-
12	582480804	PANEL -	1	-
13	589304602	PLATE -	1	-
14	574228602	PLATE *For 96767860300, 96767860200, 96767860101, 967678701-00, 967678601-00*	1	-
14	596694102	PLATE *For 967930101-00*	1	-
15	582478701	BUMPER -	2	-
16	575811501	BUMPER -	2	-
17	522801401	BUMPER -	4	-
18	539102587	ABSORBER -	2	-
19	589745202	COVER -	1	-
20	582480502	CROSS MEMBER -	1	-
21	589744001	ISOLATOR -	2	-
22	539104411	KNOB -	1	-
23	591344501	KNOB -	2	-
24	591101701	PIN -	2	-
25	591101601	PIN -	2	-
26	582460702	PLATE -	1	-
27	582460606	BRACKET *MX-14*	1	-
28	589500701	BRACKET	1	-

Ref.	Article N.	Description	Qty	Kit
		-		
29	539104763	CLIP -	7	-
30	589806801	NUT -	2	-
31	539111028	NUTSERT 5/16-18 THICK GRIP -	2	-
32	525612801	SCREW -	4	-
33	574233801	SCREW -	2	-
34	525544001	BOLT -	2	-
35	539113226	BOLT -	4	-
36	577117701	SCREW -	4	-
37	539100145	BOLT -	2	-
38	872140404	BOLT -	4	-
39	872140406	BOLT *For 96767860300, 96767860200, 96767860101, 967678701-00, 967678601-00*	2	-
39	539115620	1/4-20X3/4 CARR BLT *For 967930101-00*	2	-
40	539990316	BOLT -	14	-
41	539990208	SCREW -	2	-
42	539110303	BOLT -	4	-
43	580754601	BOLT -	6	-
44	589797201	SCREW -	2	-
45	817490408	SCREW -	2	-
46	585986101	BOLT -	2	-
47	525829101	NUT -	6	-
48	539976978	NUT -	6	-

Ref.	Article N.	Description	Qty	Kit
49	521996501	NUT -	12	-
50	539112899	NUT, 5/16-18, NYLOC -	21	-
51	539102653	WASHER -	4	-
52	539108120	NUT *For 967930101-00*	1	-
53	583611601	BOLT *For 967930101-00*	1	-
54	591176601	BOLT *For 967930101-00*	1	-
58	590877803	ROPS *ROPS ASSY*	1	-

MOWER LIFT \/ DECK LIFT

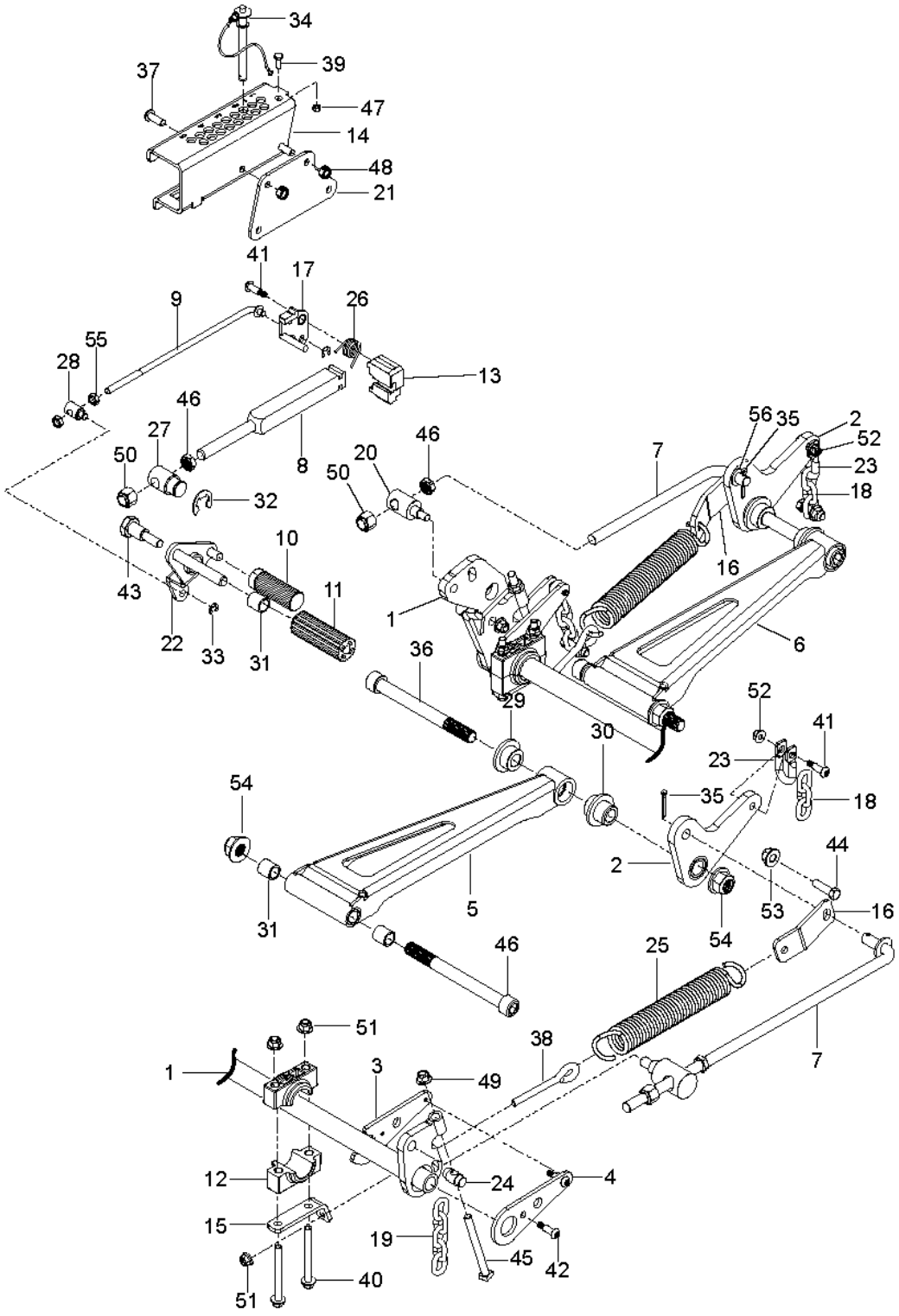

Ref.	Article N.	Description	Qty	Kit
1	582483902	PANEL	1	-
2	582483602	PANEL	1	-
3	586161801	HOUR METER	1	-
4	574455401	SWITCH	1	-
5	589887201	SWITCH	1	-

Ref.	Article N.	Description	Qty	Kit
6	574455501	KEY	1	-
7	581878301	LIGHT *For 967930101-00, 967678701-00*	1	-
7	574206901	CABLE *CHOKE/ For 96767860300, 96767860200, 96767860101*	1	-
8	582120301	THROTTLE CONTROL *46*	1	-
9	589819501	BATTERY *MX-9/ For 967930101-00, 967678701-00, 967678601-00*	1	-
9	589819502	BATTERY *MX-12/ For 967930101-00, 967678701-00, 967678601-00*	1	-
9	589819503	BATTERY *MX-14/ For 96767860300, 96767860200, 96767860101*	1	-
9	582460606	BRACKET *MX-14*	1	-
9	596990201	SERVICE KIT *MX-12 Bracket (Battery not included) For 967930101-00, 967678701-00, 967678601-00*	1	-
10	539103178	NUT CAP	1	-
11	539132624	KNOB	1	-
12	539102759	INSULATOR	2	-
13	592872701	FUEL GAUGE	2	-
14	539114341	SCREW	6	-
15	532199855	SCREW	2	-
16	582460801	SCREW	2	-
21	593777801	HARNESS *FOR CARB ENGINES*	1	-
21	593777803	HARNESS *FOR KOHLER & YAMAHA EFI*	1	-
22	589838501	HARNESS	1	-
23	574514001	TIMER *NOT SHOWN*	1	-
24	590632101	CABLE *NOT SHOWN*	1	-
25	539101714	SOLENOID *NOT SHOWN (SOLENOID KAW FX)*	1	-
1	574437301	DECAL *BELT ROUTING*	1	-
2	590209401	DECAL *MOTION/BRAKE RIGHT*	1	-
3	590209501	DECAL *MOTION_BRAKE_LEFT*	1	-

Ref.	Article N.	Description	Qty	Kit
3	590807601	DECAL *Z554X*	1	-
4	581724301	DECAL *NO STEP*	2	-
5	539105745	DECAL *BATTERY WARNING*	1	-
6	539105744	DECAL *DANGER BELT*	2	-
7	581724401	DECAL *DEFLECTOR WARNING*	1	-
8	532424102	DECAL *SPARK ARRESTOR*	1	-
9	574455001	DECAL *CROWN LARGE*	1	-
10	574569006	DECAL *ROPS/ For 96767860300, 96767860200,*	1	-
10	593011101	DECAL *ROPS/ For 967930101-00, 967678701-00, 967678601-00*	1	-
11	574569002	DECAL *ROPS WARNING*	1	-
12	574569401	DECAL *FUSE*	1	-
13	584904601	DECAL *DECK/DEFLECT WARNING*	1	-
14	532428676	DECAL *CROWN SMALL*	1	-
15	590799301	DECAL *DECK HEIGHT*	1	-
16	590210001	DECAL *COMMERCIAL*	1	-
17	590846801	DECAL *MAINTANCE/SERVICE*	1	-
18	590210301	DECAL *CONTROL PANEL RIGHT - CHOKE /For 96767860300, 96767860200, 96767860101*	1	-
18	590210302	DECAL *CONTROL PANEL RIGHT-EFI/ For 967930101-00, 967678701-00, 967678601-00*	1	-
19	590210501	DECAL *CONTROL PANEL LEFT*	1	-
20	590209701	DECAL *TRANSMISSION WARNING*	1	-
21	590209202	DECAL	1	-

Ref.	Article N.	Description	Qty	Kit
		START W/ CHOKE		
22	577469001	DECAL *EMBLEM*	2	-
30	577150101	DECAL *FUEL - NOT SHOWN*	1	-
31	590807801	DECAL *Z560X / For 967678601-00, 967678701-00*	1	-
32	590807901	DECAL *Z572X / For 967678601-00, 967678701-00*	1	-
1	582733302	PLATE -	1	-
2	525749501	CLUTCH -	1	-
3	522676702	STOP -	1	-
4	539118911	NIPPLE -	1	-
5	522837001	PLUG -	1	-
6	510019801	PULLEY -	1	-
7	539119680	ADAPTER -	1	-
8	539105072	90DEG.ELBOW 3/8NPT -	1	-
9	525749901	KEY -	1	-
10	587886001	MUFFLER -	1	-
11	539109618	O-RING -	1	-
12	505280001	TIE WRAP -	1	-
13	581332801	BOLT -	1	-
14	574233801	SCREW -	4	-
15	539990563	SCREW -	4	-
16	874780716	BOLT -	1	-
17	539990208	SCREW -	2	-

Ref.	Article N.	Description	Qty	Kit
18	539102933	SCREW -	2	-
19	539108120	NUT -	1	-
20	539112899	NUT, 5/16-18, NYLOC -	8	-
21	539102582	NUT -	1	-
22	539102593	WASHER -	4	-
23	539990247	WASHER -	1	-
24	539125626	WASHER -	1	-
25	586839701	GASKET *NOT SHOWN*	2	-
1	582483105	FUEL TANK ASSY *For 96767860300, 96767860200, 96767860101, 967678701-00, 967678601-00*	1	-
1	590680505	TANK UNIT ASSY *For 967930101-00*	1	-
2	582481705	FUEL TANK ASSY *For 96767860300, 96767860200, 96767860101, 967678701-00, 967678601-00*	1	-
2	590680405	TANK UNIT ASSY *For 967930101-00*	1	-
3	587044550	HOSE -	1	-
4	587044526	HOSE -	1	-
5	587044517	HOSE -	1	-
6	587044846	HOSE -	1	-
7	587044808	HOSE *For 967930101-00*	1	-
7	587044833	HOSE *For 96767860300, 96767860200, 96767860101, 967678701-00, 967678601-00*	1	-
8	587044824	HOSE -	1	-
9	574206602	FITTING -	1	-
10	575018101	CAP -	2	-
11	582483301	GUARD	1	-

Ref.	Article N.	Description	Qty	Kit
		-		
12	590638801	SENSOR -	2	-
13	576618101	TANK VENT -	2	-
14	539102679	VALVE -	1	-
15	582482301	GUARD -	1	-
15	525865402	TUBE ASSY -	1	-
16	532003645	BUSHING -	2	-
17	590209101	GROMMET -	2	-
18	584648201	GROMMET -	2	-
19	582481502	BRACKET -	2	-
20	582481602	BRACKET -	2	-
20	525865403	TUBE ASSY -	1	-
21	582483401	COVER -	1	-
22	539912222	CLAMP -	6	-
23	575436501	CLAMP -	6	-
24	582482601	CLIP -	8	-
25	505280001	TIE WRAP -	5	-
26	874490548	BOLT -	6	-
27	582482401	COVER -	1	-
27	590257301	SCREW -	6	-
28	817490516	SCREW -	6	-
29	582484201	SCREW -	8	-

Ref.	Article N.	Description	Qty	Kit
30	539112899	NUT, 5/16-18, NYLOC -	20	-
31	532126684	SHIM -	6	-
1	591359901	SHIELD -	1	-
2	582461206	BRACKET -	1	-
3	539102587	ABSORBER -	4	-
4	582461701	HOLDER ASSY -	3	-
5	582461303	ROD -	2	-
6	874780412	BOLT -	3	-
7	874490548	BOLT -	4	-
8	503200001	SCREW EHHFM -	3	-
9	587592101	SCREW -	4	-
10	521991101	NUT -	2	-
11	539112899	NUT, 5/16-18, NYLOC -	8	-
12	532191730	NUT -	3	-
13	731231405	HEXAGON NUT -	3	-
14	873350800	NUT -	2	-
1	582463102	ARM -	1	-
2	501603701	BEARING -	2	-
3	582479102	BRACKET -	4	-
4	582480101	CLAMP -	4	-
5	529311401	FITTING -	2	-
6	582479404	FRAME	1	-

Ref.	Article N.	Description	Qty	Kit
		-		
7	582480204	HOSE -	2	-
8	586933802	MOUNT -	1	-
9	582468101	SHAFT -	1	-
10	587654101	PULLEY -	2	-
11	582716201	ROD END -	1	-
12	582468401	SPRING -	1	-
13	574499201	TANK -	2	-
14	582480001	TRANSMISSION -	1	-
15	582480002	TRANSMISSION -	1	-
16	576127201	FILTER -	1	-
17	582480402	V-BELT -	1	-
18	874490652	SCREW -	1	-
19	574210601	SCREW -	8	-
20	525828901	BOLT *For 96767860300, 96767860200, 96767860101*	8	-
20	874490848	SCREW *For 967930101-00, 967678701-00, 967678601-00*	8	-
21	539100145	BOLT -	2	-
22	539990645	BOLT -	2	-
23	532165857	SCREW -	4	-
24	539913847	BOLT -	1	-
25	521991101	NUT -	8	-
26	521996501	NUT -	6	-

Ref.	Article N.	Description	Qty	Kit
27	819133210	WASHER -	1	-
1	591359704	CUTTING DECK -	1	-
2	588264805	DRIVE BELT -	1	-
3	575265901	BLADE -	3	-
4	582462702	ARM -	1	-
5	521979701	PULLEY -	3	-
6	510015101	PULLEY -	3	-
7	582463003	PULLEY -	1	-
8	582463006	PULLEY -	1	-
9	582468801	CHUTE -	1	-
10	510254501	SHIELD -	3	-
11	574169601	ROLLER -	4	-
12	574196401	TUBE -	2	-
13	574196501	TUBE -	1	-
14	539131518	BEARING -	2	-
15	510263701	BEARING -	2	-
16	582467302	BRACKET -	1	-
17	582463203	BRACKET *For 96767860300, 96767860200, 96767860101, 967678701-00, 967678601-00*	1	-
17	582463207	BRACKET *For 967930101-00*	1	-
18	582463204	BRACKET *For 96767860300, 96767860200, 96767860101, 967678701-00, 967678601-00*	1	-
18	582463208	BRACKET *For 967930101-00*	1	-
19	582472502	BELT GUARD	1	-

Ref.	Article N.	Description	Qty	Kit
		For 96767860300, 96767860200, 96767860101, 967678701-00, 967678601-00		
19	594913302	BELT GUIDE *For 967930101-00*	1	-
20	582470201	KEEPER -	1	-
21	539104411	KNOB -	2	-
22	590523702	PLATE -	1	-
23	582466401	PLATE -	1	-
24	582468101	SHAFT -	1	-
25	582468301	SPACER -	1	-
26	589455201	SPACER -	1	-
27	582468001	SPRING -	1	-
28	510437502	BAFFLE -	1	-
29	539104763	CLIP -	2	-
30	539115620	1/4-20X3/4 CARR BLT -	4	-
31	872140610	BOLT -	3	-
32	510022301	SCREW -	2	-
33	872140628	BOLT -	2	-
34	872140864	BOLT -	1	-
35	874490644	BOLT -	2	-
36	574210601	SCREW -	18	-
37	525612801	SCREW -	2	-
38	521996601	SCREW -	1	-
39	582476401	SCREW -	4	-

Ref.	Article N.	Description	Qty	Kit
40	539130315	BOLT -	9	-
41	539119007	SCREW -	3	-
42	574202001	BOLT -	1	-
43	539913847	BOLT -	1	-
44	521996501	NUT -	10	-
45	539112899	NUT, 5/16-18, NYLOC -	4	-
46	521991101	NUT -	3	-
47	539109332	NUT -	1	-
48	539976978	NUT -	4	-
49	539106504	WASHER -	2	-
50	539109600	WASHER -	9	-
1	582462602	SHAFT -	1	-
2	592654001	ARM -	1	-
2	592654002	ARM -	1	-
3	582465402	ARM -	2	-
4	582463902	ARM -	2	-
5	582462001	ARM -	1	-
6	582462002	ARM -	1	-
7	582464601	ROD -	2	-
8	582472801	ROD -	1	-
9	582471401	ROD -	1	-
10	510408301	PEDAL	1	-

Ref.	Article N.	Description	Qty	Kit
		-		
11	510089501	PAD -	1	-
12	510023902	BLOCK -	4	-
13	582467201	BLOCK -	1	-
14	582466902	BRACKET -	1	-
15	582468902	BRACKET -	2	-
16	589454103	LEVER -	1	-
17	592654101	LEVER -	1	-
18	539109693	LIFT CHAIN - 3 LINK -	2	-
18	589454104	LEVER -	1	-
19	539102641	CHAIN -	2	-
20	582464801	PIVOT -	2	-
21	582763902	PLATE -	1	-
22	589453201	LEVER ASSY -	1	-
23	582469001	SHACKLE -	2	-
24	582464201	SHAFT -	2	-
25	593091801	SPRING -	2	-
26	582471301	SPRING -	1	-
27	582467001	SWIVEL -	1	-
28	582467101	SWIVEL -	1	-
29	582469901	BUSHING -	2	-
30	582469801	BUSHING -	2	-

Ref.	Article N.	Description	Qty	Kit
31	510089201	BUSHING -	5	-
32	539912730	RING -	1	-
33	539990870	RING -	2	-
34	590465501	PIN -	1	-
35	539102889	SPLIT PIN -	2	-
36	582466701	SCREW -	4	-
37	582472601	SCREW -	2	-
38	574202001	BOLT -	2	-
39	539990580	SCREW -	1	-
40	589786001	SCREW -	4	-
41	501064102	SCREW -	3	-
42	501064101	SCREW -	4	-
43	510408201	BOLT -	1	-
44	539101175	SCREW -	4	-
45	582465601	SCREW -	2	-
46	589677701	NUT -	3	-
47	539976978	NUT -	1	-
48	539990546	NUT -	2	-
49	539119124	NUT -	4	-
50	539110340	NUT -	3	-
51	521996501	NUT -	6	-
52	539112899	NUT, 5/16-18, NYLOC	2	-

Ref.	Article N.	Description	Qty	Kit
		-		
53	539132019	NUT -	4	-
54	582466601	NUT -	4	-
55	539108732	NUT 3/8-24 HEX JAM ZD -	2	-
56	539991043	BUSHING -	2	-
1	579866104	SEAT ASSY -	1	-
1	582460103	SEAT *Fits 97058500100*	1	-
2	582478801	BAR -	1	-
3	582478201	BRACKET -	2	-
4	590555002	BRACKET -	1	-
5	590481801	ISOLATOR -	8	-
6	539116377	INSERT -	4	-
7	590373501	LATCH -	1	-
8	590506802	PLATE -	1	-
9	590507201	ROD -	1	-
10	539113952	SPRING -	2	-
11	582478101	NUT -	4	-
12	532192749	SWITCH -	1	-
13	539108392	HCS 5/16-18 X 5/8 GR 5 ZD -	4	-
14	582478901	SCREW -	2	-
15	582478501	SCREW -	2	-
16	539990316	BOLT -	8	-

Ref.	Article N.	Description	Qty	Kit
17	582478601	NUT -	2	-
18	539913847	BOLT -	1	-
19	539112899	NUT, 5/16-18, NYLOC -	6	-
20	522023401	WASHER -	2	-
21	532413524	WASHER -	8	-
22	539990118	WASHER -	2	-
23	539990187	WASHER -	4	-
24	579866109	SEAT ASSY *Knob*	1	-
25	579866108	SEAT ASSY *REPLACEMENT PAD ONLY*	2	-
1	580942201	HUB -	3	-
2	580942101	SHAFT -	3	-
3	580942701	V-RING -	6	-
4	580942601	SEAL -	6	-
5	583911101	BEARING KIT *ALSO ORDER TOOL KIT*	3	-
6	580942301	SPACER -	3	-
7	580942501	CARRIER -	3	-
8	539976998	NIPPLE -	3	-
9	539977326	FITTING -	3	-
10	539130653	NUT -	3	-
11	580943306	SPINDLE -	3	-
12	580942801	SHIM *For 967678601-00, 967678701-00*	1	-
13	574754201	KIT	1	-

Ref.	Article N.	Description	Qty	Kit
		NOT SHOWN		
1	582475501	LEVER *LEFT*	1	-
2	582475502	LEVER *RIGHT*	1	-
3	596925601	ROD *RIGHT SIDE ASSY*	1	-
3	596925701	ROD *LEFT SIDE ASSY*	1	-
3	598852501	SERVICE KIT *COUPLER KIT. CONTAINS (2) COUPLERS THAT FITS BOTH LH/RH SIDES. REF # 4 SCREWS INTO THIS COUPLER*	1	-
4	588692502	ROD *ROD.END.MALE.LH THREAD*	2	-
5	579764601	JOINT *JOINT.RH.THREAD.FEMALE.5/16*	2	-
6	539923515	SPACER	2	-
7	597744702	BRACKET	2	-
8	592653801	CARRIER *w/BEARINGS LEFT*	1	-
8	592653802	CARRIER *w/BEARINGS RIGHT*	1	-
9	592653901	CARRIER	2	-
12	582477802	BRACKET *LEFT*	1	-
12	582477804	BRACKET *RIGHT*	1	-
13	582476902	BRACKET	2	-
14	582475102	BRACKET	4	-
15	587225301	PIN	2	-
16	582551901	CLIP	2	-
17	588775401	DAMPER	2	-
18	582477401	PIN	2	-
19	589505102	PIVOT	2	-
20	589489601	RETAINER	2	-
21	589500902	SWITCH	2	-
22	582475001	SPACER	2	-
23	582711303	SPACER	2	-
24	582477001	SPRING	4	-
25	532151332	SPRING	2	-
26	582477702	SPRING	2	-

Ref.	Article N.	Description	Qty	Kit
27	597744501	ADAPTER	2	-
28	582477501	CABLE	2	-
29	539110607	STUD	4	-
30	582477602	BRACKET	2	-
31	582476801	BEARING	4	-
32	539131518	BEARING	8	-
33	532170165	BOLT	4	-
34	525544001	BOLT	4	-
35	525465402	SCREW	2	-
36	539976934	SCREW	4	-
37	582477102	SCREW	4	-
38	582476401	SCREW	4	-
39	596240801	BOLT	2	-
40	595901501	BOLT	4	-
41	577117701	SCREW	2	-
42	589505602	SCREW	2	-
44	594944401	NUT	14	-
45	596040901	HEXAGON NUT	4	-
46	521996502	NUT	6	-
47	539990184	NUT	4	-
48	596134901	WASHER	2	-
49	539990187	WASHER	4	-
50	596204101	WASHER	2	-
51	522023401	WASHER	4	-
1	582475501	LEVER -	1	-
2	582475502	LEVER -	1	-
3	501567001	ROD *For 967930101-00*	1	-
3	592653701	CONTROL *LEFT For 96767860300, 96767860200, 96767860101, 967678701. 967678601*	1	-
3	592653702	CONTROL *RIGHT*	1	-
4	588692502	ROD -	2	-
5	579764601	JOINT -	2	-
6	582484001	BELLOWS *For 967930101-00*	1	-

Ref.	Article N.	Description	Qty	Kit
6	591193301	SERVICE KIT *For 96767860300, 96767860200, 96767860101, 967678701-00, 967678601-00*	1	-
7	582484101	BELLOWS *For 967930101-00*	1	-
7	591193302	SERVICE KIT *For 96767860300, 96767860200, 96767860101, 967678701-00, 967678601-00*	1	-
8	592653801	CARRIER *w/BEARINGS LEFT/ For 96767860300, 96767860200, 96767860101, 967678701-00, 967678601-00*	1	-
8	592653802	CARRIER *w/BEARINGS LEFT/ For 967930101-00*	1	-
9	592653901	CARRIER -	2	-
10	592724002	CONTROL -	1	-
10	592724001	CONTROL -	1	-
11	592653501	PARKING BRAKE -	1	-
12	582477802	BRACKET *LEFT*	1	-
12	582477804	BRACKET *RIGHT*	1	-
13	582476901	BRACKET -	2	-
14	582475102	BRACKET -	4	-
15	587225301	PIN -	2	-
16	582551901	CLIP -	2	-
17	588775401	DAMPER -	2	-
18	582477401	PIN -	2	-
19	589505101	PIVOT -	2	-
20	589489601	RETAINER -	2	-
21	589500901	SWITCH -	2	-
22	582475001	SPACER -	2	-

Ref.	Article N.	Description	Qty	Kit
23	582711303	SPACER -	2	-
24	582477001	SPRING -	4	-
25	532151332	SPRING -	2	-
26	582477701	SPRING -	2	-
27	582477201	YOKE -	2	-
28	582477501	CABLE -	2	-
29	539110607	STUD -	4	-
30	582477601	BRACKET -	2	-
31	582476801	BEARING -	4	-
32	539131518	BEARING -	8	-
33	539110303	BOLT -	4	-
34	525544001	BOLT -	4	-
35	525465401	SCREW -	2	-
36	539976934	SCREW -	4	-
37	582477101	SCREW -	4	-
38	582476401	SCREW -	2	-
39	539115574	EYE BOLT -	2	-
40	539990208	SCREW -	4	-
41	577117701	SCREW -	6	-
42	589505601	SCREW -	2	-
43	582482901	RIVET -	12	-
44	539112899	NUT, 5/16-18, NYLOC	14	-

Ref.	Article N.	Description	Qty	Kit
		-		
45	539990223	NUT -	4	-
46	521996501	NUT -	6	-
47	539990184	NUT -	4	-
48	539990692	WASHER -	2	-
49	539990187	WASHER -	4	-
50	819111116	WASHER -	2	-
51	522023401	WASHER -	2	-
1	599893003	COVER -	1	-
2	599893004	COVER -	1	-
3	596564002	BOLT -	4	-
1	599156701	TIRE *fits 967669801-00, 967699802-00*	2	-
1	510154601	TIRE *Use From SN: 060117F000001 To SN: 090820F999999*	2	-
2	539105152	TIRE *24x12-12 Tire Only*	2	-
2	510154502	WHEEL RIM *Rim Only*	2	-
2	510154501	TIRE *Tire & Rim Assembly*	2	-
3	525611902	FORK -	2	-
4	510034001	CAP -	2	-
5	510034301	SEAL -	2	-
6	510034403	BEARING -	4	-
7	596623501	VALVE -	2	-
8	590690701	SPACER *Use From SN: 060117F000001 To SN: 090820F999999*	4	-

Ref.	Article N.	Description	Qty	Kit
9	590704902	SPACER *Use From SN: 060117F000001 To SN: 090820F999999*	2	-
10	594946501	BOLT -	2	-
11	522842602	NUT -	2	-
12	587653902	NUT -	8	-
13	873930800	NUT *For 967678802-01, 967678801-01*	2	-
13	521991102	NUT *For 96793040300, 967669703-01*	2	-
14	595086801	WASHER -	2	-
15	574824701	WASHER -	2	-
16	539102484	BEARING *Use after SN: 090920F000001*	4	-
17	539105307	ROLLER BEARING *Use after SN: 090920F000001*	4	-
18	539912234	VALVE *Use after SN: 090920F000001*	2	-
19	599405101	SHIM *Use after SN: 090920F000001*	2	-
20	539133007	WASHER *Use after SN: 090920F000001*	2	-
21	539105522	TIRE *13X6.5-6 Tire Only Use After SN: 090920F000001*	2	-
21	581199501	WHEEL ASSY *Use after SN: 090920F000001*	2	-
22	575334901	SPACER *Use after SN: 090920F000001*	2	-
23	596623501	VALVE -	2	-
24	597383801	SERVICE KIT *Use From SN: 060117F000001 To SN: 090820F999999*	2	-
1	597383801	SERVICE KIT -	1	-
1	510154601	TIRE -	2	-
2	522905101	TIRE -	2	-
3	525611902	FORK	2	-

Ref.	Article N.	Description	Qty	Kit
		-		
4	510034001	CAP -	2	-
4	522905102	TIRE -	2	-
5	510034301	SEAL -	2	-
6	510034403	BEARING -	4	-
7	539101474	NIPPLE -	2	-
8	590690701	SPACER -	4	-
9	590704901	SPACER -	2	-
10	539105517	BOLT -	2	-
11	522842601	NUT -	2	-
12	587653902	NUT -	8	-
13	873930800	NUT -	2	-
14	539990250	WASHER -	2	-
15	574824701	WASHER -	2	-
1	591359801	FRAME *w/ SAFETY DECALS*	1	-
2	522675702	BUMPER -	1	-
3	587898002	GUARD -	1	-
4	589808802	BRACKET -	2	-
5	589807202	BRACKET -	1	-
6	589448202	BRACKET -	1	-
7	589448204	BRACKET -	1	-
8	582481101	BRACKET -	2	-

Ref.	Article N.	Description	Qty	Kit
9	582481002	PANEL *For 96767860300, 96767860200, 96767860101, 967678701-00, 967678601-00*	1	-
9	595327502	PANEL *For 967930101-00*	1	-
10	582481004	PANEL -	1	-
11	582480803	PANEL -	1	-
12	582480804	PANEL -	1	-
13	589304602	PLATE -	1	-
14	574228602	PLATE *For 96767860300, 96767860200, 96767860101, 967678701-00, 967678601-00*	1	-
14	596694102	PLATE *For 967930101-00*	1	-
15	582478701	BUMPER -	2	-
16	575811501	BUMPER -	2	-
17	522801401	BUMPER -	4	-
18	539102587	ABSORBER -	2	-
19	589745202	COVER -	1	-
20	582480502	CROSS MEMBER -	1	-
21	589744001	ISOLATOR -	2	-
22	539104411	KNOB -	1	-
23	591344501	KNOB -	2	-
24	591101701	PIN -	2	-
25	591101601	PIN -	2	-
26	582460702	PLATE -	1	-
27	582460606	BRACKET *MX-14*	1	-
28	589500701	BRACKET	1	-

Ref.	Article N.	Description	Qty	Kit
		-		
29	539104763	CLIP -	7	-
30	589806801	NUT -	2	-
31	539111028	NUTSERT 5/16-18 THICK GRIP -	2	-
32	525612801	SCREW -	4	-
33	574233801	SCREW -	2	-
34	525544001	BOLT -	2	-
35	539113226	BOLT -	4	-
36	577117701	SCREW -	4	-
37	539100145	BOLT -	2	-
38	872140404	BOLT -	4	-
39	872140406	BOLT *For 96767860300, 96767860200, 96767860101, 967678701-00, 967678601-00*	2	-
39	539115620	1/4-20X3/4 CARR BLT *For 967930101-00*	2	-
40	539990316	BOLT -	14	-
41	539990208	SCREW -	2	-
42	539110303	BOLT -	4	-
43	580754601	BOLT -	6	-
44	589797201	SCREW -	2	-
45	817490408	SCREW -	2	-
46	585986101	BOLT -	2	-
47	525829101	NUT -	6	-
48	539976978	NUT -	6	-

Ref.	Article N.	Description	Qty	Kit
49	521996501	NUT -	12	-
50	539112899	NUT, 5/16-18, NYLOC -	21	-
51	539102653	WASHER -	4	-
52	539108120	NUT *For 967930101-00*	1	-
53	583611601	BOLT *For 967930101-00*	1	-
54	591176601	BOLT *For 967930101-00*	1	-
58	590877803	ROPS *ROPS ASSY*	1	-

SEAT

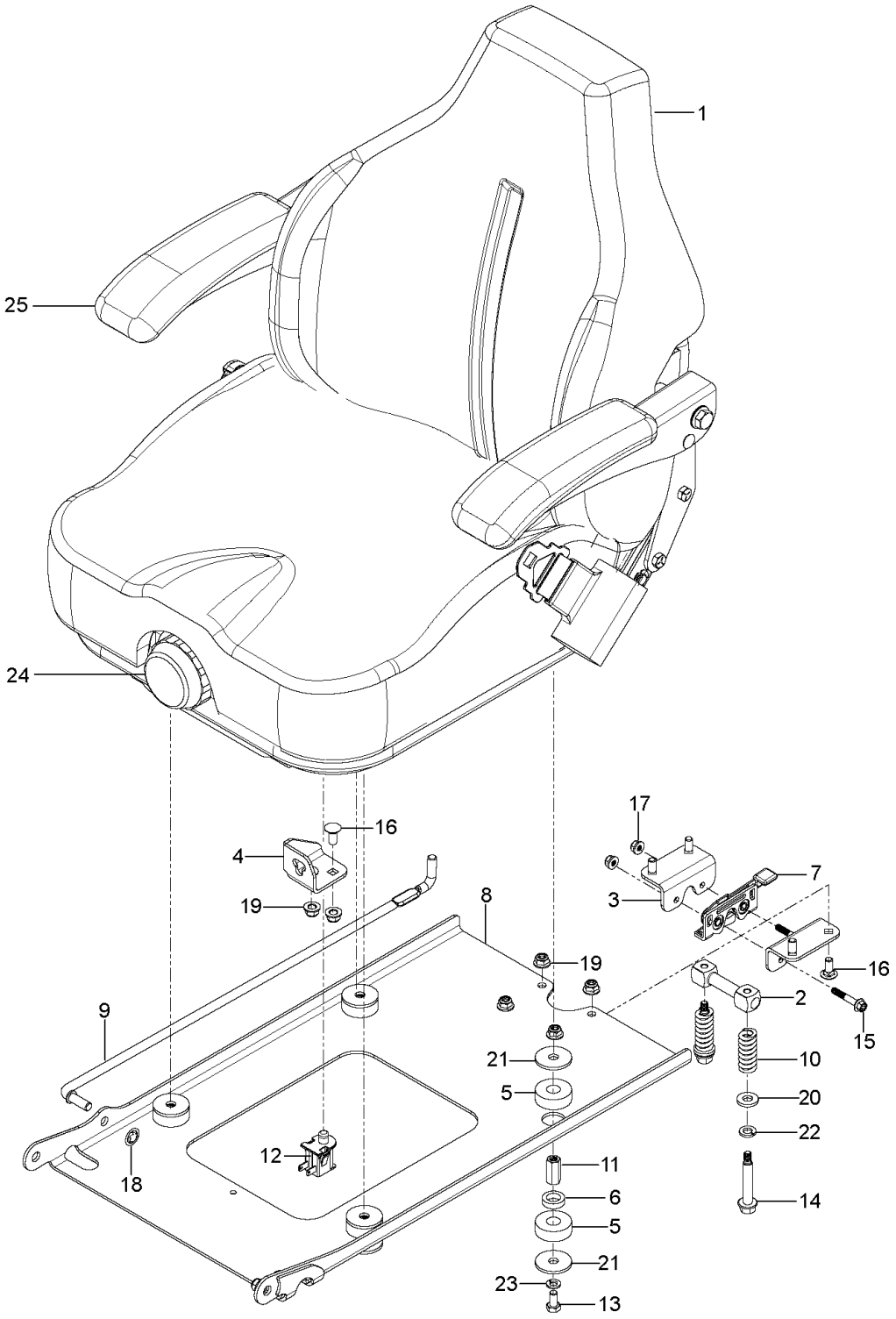

Ref.	Article N.	Description	Qty	Kit
1	582483902	PANEL	1	-
2	582483602	PANEL	1	-
3	586161801	HOUR METER	1	-
4	574455401	SWITCH	1	-
5	589887201	SWITCH	1	-

Ref.	Article N.	Description	Qty	Kit
6	574455501	KEY	1	-
7	581878301	LIGHT *For 967930101-00, 967678701-00*	1	-
7	574206901	CABLE *CHOKE/ For 96767860300, 96767860200, 96767860101*	1	-
8	582120301	THROTTLE CONTROL *46*	1	-
9	589819501	BATTERY *MX-9/ For 967930101-00, 967678701-00, 967678601-00*	1	-
9	589819502	BATTERY *MX-12/ For 967930101-00, 967678701-00, 967678601-00*	1	-
9	589819503	BATTERY *MX-14/ For 96767860300, 96767860200, 96767860101*	1	-
9	582460606	BRACKET *MX-14*	1	-
9	596990201	SERVICE KIT *MX-12 Bracket (Battery not included) For 967930101-00, 967678701-00, 967678601-00*	1	-
10	539103178	NUT CAP	1	-
11	539132624	KNOB	1	-
12	539102759	INSULATOR	2	-
13	592872701	FUEL GAUGE	2	-
14	539114341	SCREW	6	-
15	532199855	SCREW	2	-
16	582460801	SCREW	2	-
21	593777801	HARNESS *FOR CARB ENGINES*	1	-
21	593777803	HARNESS *FOR KOHLER & YAMAHA EFI*	1	-
22	589838501	HARNESS	1	-
23	574514001	TIMER *NOT SHOWN*	1	-
24	590632101	CABLE *NOT SHOWN*	1	-
25	539101714	SOLENOID *NOT SHOWN (SOLENOID KAW FX)*	1	-
1	574437301	DECAL *BELT ROUTING*	1	-
2	590209401	DECAL *MOTION/BRAKE RIGHT*	1	-
3	590209501	DECAL *MOTION_BRAKE_LEFT*	1	-

Ref.	Article N.	Description	Qty	Kit
3	590807601	DECAL *Z554X*	1	-
4	581724301	DECAL *NO STEP*	2	-
5	539105745	DECAL *BATTERY WARNING*	1	-
6	539105744	DECAL *DANGER BELT*	2	-
7	581724401	DECAL *DEFLECTOR WARNING*	1	-
8	532424102	DECAL *SPARK ARRESTOR*	1	-
9	574455001	DECAL *CROWN LARGE*	1	-
10	574569006	DECAL *ROPS/ For 96767860300, 96767860200,*	1	-
10	593011101	DECAL *ROPS/ For 967930101-00, 967678701-00, 967678601-00*	1	-
11	574569002	DECAL *ROPS WARNING*	1	-
12	574569401	DECAL *FUSE*	1	-
13	584904601	DECAL *DECK/DEFLECT WARNING*	1	-
14	532428676	DECAL *CROWN SMALL*	1	-
15	590799301	DECAL *DECK HEIGHT*	1	-
16	590210001	DECAL *COMMERCIAL*	1	-
17	590846801	DECAL *MAINTANCE/SERVICE*	1	-
18	590210301	DECAL *CONTROL PANEL RIGHT - CHOKE /For 96767860300, 96767860200, 96767860101*	1	-
18	590210302	DECAL *CONTROL PANEL RIGHT-EFI/ For 967930101-00, 967678701-00, 967678601-00*	1	-
19	590210501	DECAL *CONTROL PANEL LEFT*	1	-
20	590209701	DECAL *TRANSMISSION WARNING*	1	-
21	590209202	DECAL	1	-

Ref.	Article N.	Description	Qty	Kit
		START W/ CHOKE		
22	577469001	DECAL *EMBLEM*	2	-
30	577150101	DECAL *FUEL - NOT SHOWN*	1	-
31	590807801	DECAL *Z560X / For 967678601-00, 967678701-00*	1	-
32	590807901	DECAL *Z572X / For 967678601-00, 967678701-00*	1	-
1	582733302	PLATE -	1	-
2	525749501	CLUTCH -	1	-
3	522676702	STOP -	1	-
4	539118911	NIPPLE -	1	-
5	522837001	PLUG -	1	-
6	510019801	PULLEY -	1	-
7	539119680	ADAPTER -	1	-
8	539105072	90DEG.ELBOW 3/8NPT -	1	-
9	525749901	KEY -	1	-
10	587886001	MUFFLER -	1	-
11	539109618	O-RING -	1	-
12	505280001	TIE WRAP -	1	-
13	581332801	BOLT -	1	-
14	574233801	SCREW -	4	-
15	539990563	SCREW -	4	-
16	874780716	BOLT -	1	-
17	539990208	SCREW -	2	-

Ref.	Article N.	Description	Qty	Kit
18	539102933	SCREW -	2	-
19	539108120	NUT -	1	-
20	539112899	NUT, 5/16-18, NYLOC -	8	-
21	539102582	NUT -	1	-
22	539102593	WASHER -	4	-
23	539990247	WASHER -	1	-
24	539125626	WASHER -	1	-
25	586839701	GASKET *NOT SHOWN*	2	-
1	582483105	FUEL TANK ASSY *For 96767860300, 96767860200, 96767860101, 967678701-00, 967678601-00*	1	-
1	590680505	TANK UNIT ASSY *For 967930101-00*	1	-
2	582481705	FUEL TANK ASSY *For 96767860300, 96767860200, 96767860101, 967678701-00, 967678601-00*	1	-
2	590680405	TANK UNIT ASSY *For 967930101-00*	1	-
3	587044550	HOSE -	1	-
4	587044526	HOSE -	1	-
5	587044517	HOSE -	1	-
6	587044846	HOSE -	1	-
7	587044808	HOSE *For 967930101-00*	1	-
7	587044833	HOSE *For 96767860300, 96767860200, 96767860101, 967678701-00, 967678601-00*	1	-
8	587044824	HOSE -	1	-
9	574206602	FITTING -	1	-
10	575018101	CAP -	2	-
11	582483301	GUARD	1	-

Ref.	Article N.	Description	Qty	Kit
		-		
12	590638801	SENSOR -	2	-
13	576618101	TANK VENT -	2	-
14	539102679	VALVE -	1	-
15	582482301	GUARD -	1	-
15	525865402	TUBE ASSY -	1	-
16	532003645	BUSHING -	2	-
17	590209101	GROMMET -	2	-
18	584648201	GROMMET -	2	-
19	582481502	BRACKET -	2	-
20	582481602	BRACKET -	2	-
20	525865403	TUBE ASSY -	1	-
21	582483401	COVER -	1	-
22	539912222	CLAMP -	6	-
23	575436501	CLAMP -	6	-
24	582482601	CLIP -	8	-
25	505280001	TIE WRAP -	5	-
26	874490548	BOLT -	6	-
27	582482401	COVER -	1	-
27	590257301	SCREW -	6	-
28	817490516	SCREW -	6	-
29	582484201	SCREW -	8	-

Ref.	Article N.	Description	Qty	Kit
30	539112899	NUT, 5/16-18, NYLOC -	20	-
31	532126684	SHIM -	6	-
1	591359901	SHIELD -	1	-
2	582461206	BRACKET -	1	-
3	539102587	ABSORBER -	4	-
4	582461701	HOLDER ASSY -	3	-
5	582461303	ROD -	2	-
6	874780412	BOLT -	3	-
7	874490548	BOLT -	4	-
8	503200001	SCREW EHHFM -	3	-
9	587592101	SCREW -	4	-
10	521991101	NUT -	2	-
11	539112899	NUT, 5/16-18, NYLOC -	8	-
12	532191730	NUT -	3	-
13	731231405	HEXAGON NUT -	3	-
14	873350800	NUT -	2	-
1	582463102	ARM -	1	-
2	501603701	BEARING -	2	-
3	582479102	BRACKET -	4	-
4	582480101	CLAMP -	4	-
5	529311401	FITTING -	2	-
6	582479404	FRAME	1	-

Ref.	Article N.	Description	Qty	Kit
		-		
7	582480204	HOSE -	2	-
8	586933802	MOUNT -	1	-
9	582468101	SHAFT -	1	-
10	587654101	PULLEY -	2	-
11	582716201	ROD END -	1	-
12	582468401	SPRING -	1	-
13	574499201	TANK -	2	-
14	582480001	TRANSMISSION -	1	-
15	582480002	TRANSMISSION -	1	-
16	576127201	FILTER -	1	-
17	582480402	V-BELT -	1	-
18	874490652	SCREW -	1	-
19	574210601	SCREW -	8	-
20	525828901	BOLT *For 96767860300, 96767860200, 96767860101*	8	-
20	874490848	SCREW *For 967930101-00, 967678701-00, 967678601-00*	8	-
21	539100145	BOLT -	2	-
22	539990645	BOLT -	2	-
23	532165857	SCREW -	4	-
24	539913847	BOLT -	1	-
25	521991101	NUT -	8	-
26	521996501	NUT -	6	-

Ref.	Article N.	Description	Qty	Kit
27	819133210	WASHER -	1	-
1	591359704	CUTTING DECK -	1	-
2	588264805	DRIVE BELT -	1	-
3	575265901	BLADE -	3	-
4	582462702	ARM -	1	-
5	521979701	PULLEY -	3	-
6	510015101	PULLEY -	3	-
7	582463003	PULLEY -	1	-
8	582463006	PULLEY -	1	-
9	582468801	CHUTE -	1	-
10	510254501	SHIELD -	3	-
11	574169601	ROLLER -	4	-
12	574196401	TUBE -	2	-
13	574196501	TUBE -	1	-
14	539131518	BEARING -	2	-
15	510263701	BEARING -	2	-
16	582467302	BRACKET -	1	-
17	582463203	BRACKET *For 96767860300, 96767860200, 96767860101, 967678701-00, 967678601-00*	1	-
17	582463207	BRACKET *For 967930101-00*	1	-
18	582463204	BRACKET *For 96767860300, 96767860200, 96767860101, 967678701-00, 967678601-00*	1	-
18	582463208	BRACKET *For 967930101-00*	1	-
19	582472502	BELT GUARD	1	-

Ref.	Article N.	Description	Qty	Kit
		For 96767860300, 96767860200, 96767860101, 967678701-00, 967678601-00		
19	594913302	BELT GUIDE *For 967930101-00*	1	-
20	582470201	KEEPER -	1	-
21	539104411	KNOB -	2	-
22	590523702	PLATE -	1	-
23	582466401	PLATE -	1	-
24	582468101	SHAFT -	1	-
25	582468301	SPACER -	1	-
26	589455201	SPACER -	1	-
27	582468001	SPRING -	1	-
28	510437502	BAFFLE -	1	-
29	539104763	CLIP -	2	-
30	539115620	1/4-20X3/4 CARR BLT -	4	-
31	872140610	BOLT -	3	-
32	510022301	SCREW -	2	-
33	872140628	BOLT -	2	-
34	872140864	BOLT -	1	-
35	874490644	BOLT -	2	-
36	574210601	SCREW -	18	-
37	525612801	SCREW -	2	-
38	521996601	SCREW -	1	-
39	582476401	SCREW -	4	-

Ref.	Article N.	Description	Qty	Kit
40	539130315	BOLT -	9	-
41	539119007	SCREW -	3	-
42	574202001	BOLT -	1	-
43	539913847	BOLT -	1	-
44	521996501	NUT -	10	-
45	539112899	NUT, 5/16-18, NYLOC -	4	-
46	521991101	NUT -	3	-
47	539109332	NUT -	1	-
48	539976978	NUT -	4	-
49	539106504	WASHER -	2	-
50	539109600	WASHER -	9	-
1	582462602	SHAFT -	1	-
2	592654001	ARM -	1	-
2	592654002	ARM -	1	-
3	582465402	ARM -	2	-
4	582463902	ARM -	2	-
5	582462001	ARM -	1	-
6	582462002	ARM -	1	-
7	582464601	ROD -	2	-
8	582472801	ROD -	1	-
9	582471401	ROD -	1	-
10	510408301	PEDAL	1	-

Ref.	Article N.	Description	Qty	Kit
		-		
11	510089501	PAD -	1	-
12	510023902	BLOCK -	4	-
13	582467201	BLOCK -	1	-
14	582466902	BRACKET -	1	-
15	582468902	BRACKET -	2	-
16	589454103	LEVER -	1	-
17	592654101	LEVER -	1	-
18	539109693	LIFT CHAIN - 3 LINK -	2	-
18	589454104	LEVER -	1	-
19	539102641	CHAIN -	2	-
20	582464801	PIVOT -	2	-
21	582763902	PLATE -	1	-
22	589453201	LEVER ASSY -	1	-
23	582469001	SHACKLE -	2	-
24	582464201	SHAFT -	2	-
25	593091801	SPRING -	2	-
26	582471301	SPRING -	1	-
27	582467001	SWIVEL -	1	-
28	582467101	SWIVEL -	1	-
29	582469901	BUSHING -	2	-
30	582469801	BUSHING -	2	-

Ref.	Article N.	Description	Qty	Kit
31	510089201	BUSHING -	5	-
32	539912730	RING -	1	-
33	539990870	RING -	2	-
34	590465501	PIN -	1	-
35	539102889	SPLIT PIN -	2	-
36	582466701	SCREW -	4	-
37	582472601	SCREW -	2	-
38	574202001	BOLT -	2	-
39	539990580	SCREW -	1	-
40	589786001	SCREW -	4	-
41	501064102	SCREW -	3	-
42	501064101	SCREW -	4	-
43	510408201	BOLT -	1	-
44	539101175	SCREW -	4	-
45	582465601	SCREW -	2	-
46	589677701	NUT -	3	-
47	539976978	NUT -	1	-
48	539990546	NUT -	2	-
49	539119124	NUT -	4	-
50	539110340	NUT -	3	-
51	521996501	NUT -	6	-
52	539112899	NUT, 5/16-18, NYLOC	2	-

Ref.	Article N.	Description	Qty	Kit
		-		
53	539132019	NUT -	4	-
54	582466601	NUT -	4	-
55	539108732	NUT 3/8-24 HEX JAM ZD -	2	-
56	539991043	BUSHING -	2	-
1	579866104	SEAT ASSY -	1	-
1	582460103	SEAT *Fits 97058500100*	1	-
2	582478801	BAR -	1	-
3	582478201	BRACKET -	2	-
4	590555002	BRACKET -	1	-
5	590481801	ISOLATOR -	8	-
6	539116377	INSERT -	4	-
7	590373501	LATCH -	1	-
8	590506802	PLATE -	1	-
9	590507201	ROD -	1	-
10	539113952	SPRING -	2	-
11	582478101	NUT -	4	-
12	532192749	SWITCH -	1	-
13	539108392	HCS 5/16-18 X 5/8 GR 5 ZD -	4	-
14	582478901	SCREW -	2	-
15	582478501	SCREW -	2	-
16	539990316	BOLT -	8	-

Ref.	Article N.	Description	Qty	Kit
17	582478601	NUT -	2	-
18	539913847	BOLT -	1	-
19	539112899	NUT, 5/16-18, NYLOC -	6	-
20	522023401	WASHER -	2	-
21	532413524	WASHER -	8	-
22	539990118	WASHER -	2	-
23	539990187	WASHER -	4	-
24	579866109	SEAT ASSY *Knob*	1	-
25	579866108	SEAT ASSY *REPLACEMENT PAD ONLY*	2	-
1	580942201	HUB -	3	-
2	580942101	SHAFT -	3	-
3	580942701	V-RING -	6	-
4	580942601	SEAL -	6	-
5	583911101	BEARING KIT *ALSO ORDER TOOL KIT*	3	-
6	580942301	SPACER -	3	-
7	580942501	CARRIER -	3	-
8	539976998	NIPPLE -	3	-
9	539977326	FITTING -	3	-
10	539130653	NUT -	3	-
11	580943306	SPINDLE -	3	-
12	580942801	SHIM *For 967678601-00, 967678701-00*	1	-
13	574754201	KIT	1	-

Ref.	Article N.	Description	Qty	Kit
		NOT SHOWN		
1	582475501	LEVER *LEFT*	1	-
2	582475502	LEVER *RIGHT*	1	-
3	596925601	ROD *RIGHT SIDE ASSY*	1	-
3	596925701	ROD *LEFT SIDE ASSY*	1	-
3	598852501	SERVICE KIT *COUPLER KIT. CONTAINS (2) COUPLERS THAT FITS BOTH LH/RH SIDES. REF # 4 SCREWS INTO THIS COUPLER*	1	-
4	588692502	ROD *ROD.END.MALE.LH THREAD*	2	-
5	579764601	JOINT *JOINT.RH.THREAD.FEMALE.5/16*	2	-
6	539923515	SPACER	2	-
7	597744702	BRACKET	2	-
8	592653801	CARRIER *w/BEARINGS LEFT*	1	-
8	592653802	CARRIER *w/BEARINGS RIGHT*	1	-
9	592653901	CARRIER	2	-
12	582477802	BRACKET *LEFT*	1	-
12	582477804	BRACKET *RIGHT*	1	-
13	582476902	BRACKET	2	-
14	582475102	BRACKET	4	-
15	587225301	PIN	2	-
16	582551901	CLIP	2	-
17	588775401	DAMPER	2	-
18	582477401	PIN	2	-
19	589505102	PIVOT	2	-
20	589489601	RETAINER	2	-
21	589500902	SWITCH	2	-
22	582475001	SPACER	2	-
23	582711303	SPACER	2	-
24	582477001	SPRING	4	-
25	532151332	SPRING	2	-
26	582477702	SPRING	2	-

Ref.	Article N.	Description	Qty	Kit
27	597744501	ADAPTER	2	-
28	582477501	CABLE	2	-
29	539110607	STUD	4	-
30	582477602	BRACKET	2	-
31	582476801	BEARING	4	-
32	539131518	BEARING	8	-
33	532170165	BOLT	4	-
34	525544001	BOLT	4	-
35	525465402	SCREW	2	-
36	539976934	SCREW	4	-
37	582477102	SCREW	4	-
38	582476401	SCREW	4	-
39	596240801	BOLT	2	-
40	595901501	BOLT	4	-
41	577117701	SCREW	2	-
42	589505602	SCREW	2	-
44	594944401	NUT	14	-
45	596040901	HEXAGON NUT	4	-
46	521996502	NUT	6	-
47	539990184	NUT	4	-
48	596134901	WASHER	2	-
49	539990187	WASHER	4	-
50	596204101	WASHER	2	-
51	522023401	WASHER	4	-
1	582475501	LEVER -	1	-
2	582475502	LEVER -	1	-
3	501567001	ROD *For 967930101-00*	1	-
3	592653701	CONTROL *LEFT For 96767860300, 96767860200, 96767860101, 967678701. 967678601*	1	-
3	592653702	CONTROL *RIGHT*	1	-
4	588692502	ROD -	2	-
5	579764601	JOINT -	2	-
6	582484001	BELLOWS *For 967930101-00*	1	-

Ref.	Article N.	Description	Qty	Kit
6	591193301	SERVICE KIT *For 96767860300, 96767860200, 96767860101, 967678701-00, 967678601-00*	1	-
7	582484101	BELLOWS *For 967930101-00*	1	-
7	591193302	SERVICE KIT *For 96767860300, 96767860200, 96767860101, 967678701-00, 967678601-00*	1	-
8	592653801	CARRIER *w/BEARINGS LEFT/ For 96767860300, 96767860200, 96767860101, 967678701-00, 967678601-00*	1	-
8	592653802	CARRIER *w/BEARINGS LEFT/ For 967930101-00*	1	-
9	592653901	CARRIER -	2	-
10	592724002	CONTROL -	1	-
10	592724001	CONTROL -	1	-
11	592653501	PARKING BRAKE -	1	-
12	582477802	BRACKET *LEFT*	1	-
12	582477804	BRACKET *RIGHT*	1	-
13	582476901	BRACKET -	2	-
14	582475102	BRACKET -	4	-
15	587225301	PIN -	2	-
16	582551901	CLIP -	2	-
17	588775401	DAMPER -	2	-
18	582477401	PIN -	2	-
19	589505101	PIVOT -	2	-
20	589489601	RETAINER -	2	-
21	589500901	SWITCH -	2	-
22	582475001	SPACER -	2	-

Ref.	Article N.	Description	Qty	Kit
23	582711303	SPACER -	2	-
24	582477001	SPRING -	4	-
25	532151332	SPRING -	2	-
26	582477701	SPRING -	2	-
27	582477201	YOKE -	2	-
28	582477501	CABLE -	2	-
29	539110607	STUD -	4	-
30	582477601	BRACKET -	2	-
31	582476801	BEARING -	4	-
32	539131518	BEARING -	8	-
33	539110303	BOLT -	4	-
34	525544001	BOLT -	4	-
35	525465401	SCREW -	2	-
36	539976934	SCREW -	4	-
37	582477101	SCREW -	4	-
38	582476401	SCREW -	2	-
39	539115574	EYE BOLT -	2	-
40	539990208	SCREW -	4	-
41	577117701	SCREW -	6	-
42	589505601	SCREW -	2	-
43	582482901	RIVET -	12	-
44	539112899	NUT, 5/16-18, NYLOC	14	-

Ref.	Article N.	Description	Qty	Kit
		-		
45	539990223	NUT -	4	-
46	521996501	NUT -	6	-
47	539990184	NUT -	4	-
48	539990692	WASHER -	2	-
49	539990187	WASHER -	4	-
50	819111116	WASHER -	2	-
51	522023401	WASHER -	2	-
1	599893003	COVER -	1	-
2	599893004	COVER -	1	-
3	596564002	BOLT -	4	-
1	599156701	TIRE *fits 967669801-00, 967699802-00*	2	-
1	510154601	TIRE *Use From SN: 060117F000001 To SN: 090820F999999*	2	-
2	539105152	TIRE *24x12-12 Tire Only*	2	-
2	510154502	WHEEL RIM *Rim Only*	2	-
2	510154501	TIRE *Tire & Rim Assembly*	2	-
3	525611902	FORK -	2	-
4	510034001	CAP -	2	-
5	510034301	SEAL -	2	-
6	510034403	BEARING -	4	-
7	596623501	VALVE -	2	-
8	590690701	SPACER *Use From SN: 060117F000001 To SN: 090820F999999*	4	-

Ref.	Article N.	Description	Qty	Kit
9	590704902	SPACER *Use From SN: 060117F000001 To SN: 090820F999999*	2	-
10	594946501	BOLT -	2	-
11	522842602	NUT -	2	-
12	587653902	NUT -	8	-
13	873930800	NUT *For 967678802-01, 967678801-01*	2	-
13	521991102	NUT *For 96793040300, 967669703-01*	2	-
14	595086801	WASHER -	2	-
15	574824701	WASHER -	2	-
16	539102484	BEARING *Use after SN: 090920F000001*	4	-
17	539105307	ROLLER BEARING *Use after SN: 090920F000001*	4	-
18	539912234	VALVE *Use after SN: 090920F000001*	2	-
19	599405101	SHIM *Use after SN: 090920F000001*	2	-
20	539133007	WASHER *Use after SN: 090920F000001*	2	-
21	539105522	TIRE *13X6.5-6 Tire Only Use After SN: 090920F000001*	2	-
21	581199501	WHEEL ASSY *Use after SN: 090920F000001*	2	-
22	575334901	SPACER *Use after SN: 090920F000001*	2	-
23	596623501	VALVE -	2	-
24	597383801	SERVICE KIT *Use From SN: 060117F000001 To SN: 090820F999999*	2	-
1	597383801	SERVICE KIT -	1	-
1	510154601	TIRE -	2	-
2	522905101	TIRE -	2	-
3	525611902	FORK	2	-

Ref.	Article N.	Description	Qty	Kit
		-		
4	510034001	CAP -	2	-
4	522905102	TIRE -	2	-
5	510034301	SEAL -	2	-
6	510034403	BEARING -	4	-
7	539101474	NIPPLE -	2	-
8	590690701	SPACER -	4	-
9	590704901	SPACER -	2	-
10	539105517	BOLT -	2	-
11	522842601	NUT -	2	-
12	587653902	NUT -	8	-
13	873930800	NUT -	2	-
14	539990250	WASHER -	2	-
15	574824701	WASHER -	2	-
1	591359801	FRAME *w/ SAFETY DECALS*	1	-
2	522675702	BUMPER -	1	-
3	587898002	GUARD -	1	-
4	589808802	BRACKET -	2	-
5	589807202	BRACKET -	1	-
6	589448202	BRACKET -	1	-
7	589448204	BRACKET -	1	-
8	582481101	BRACKET -	2	-

Ref.	Article N.	Description	Qty	Kit
9	582481002	PANEL *For 96767860300, 96767860200, 96767860101, 967678701-00, 967678601-00*	1	-
9	595327502	PANEL *For 967930101-00*	1	-
10	582481004	PANEL -	1	-
11	582480803	PANEL -	1	-
12	582480804	PANEL -	1	-
13	589304602	PLATE -	1	-
14	574228602	PLATE *For 96767860300, 96767860200, 96767860101, 967678701-00, 967678601-00*	1	-
14	596694102	PLATE *For 967930101-00*	1	-
15	582478701	BUMPER -	2	-
16	575811501	BUMPER -	2	-
17	522801401	BUMPER -	4	-
18	539102587	ABSORBER -	2	-
19	589745202	COVER -	1	-
20	582480502	CROSS MEMBER -	1	-
21	589744001	ISOLATOR -	2	-
22	539104411	KNOB -	1	-
23	591344501	KNOB -	2	-
24	591101701	PIN -	2	-
25	591101601	PIN -	2	-
26	582460702	PLATE -	1	-
27	582460606	BRACKET *MX-14*	1	-
28	589500701	BRACKET	1	-

Ref.	Article N.	Description	Qty	Kit
		-		
29	539104763	CLIP -	7	-
30	589806801	NUT -	2	-
31	539111028	NUTSERT 5/16-18 THICK GRIP -	2	-
32	525612801	SCREW -	4	-
33	574233801	SCREW -	2	-
34	525544001	BOLT -	2	-
35	539113226	BOLT -	4	-
36	577117701	SCREW -	4	-
37	539100145	BOLT -	2	-
38	872140404	BOLT -	4	-
39	872140406	BOLT *For 96767860300, 96767860200, 96767860101, 967678701-00, 967678601-00*	2	-
39	539115620	1/4-20X3/4 CARR BLT *For 967930101-00*	2	-
40	539990316	BOLT -	14	-
41	539990208	SCREW -	2	-
42	539110303	BOLT -	4	-
43	580754601	BOLT -	6	-
44	589797201	SCREW -	2	-
45	817490408	SCREW -	2	-
46	585986101	BOLT -	2	-
47	525829101	NUT -	6	-
48	539976978	NUT -	6	-

Ref.	Article N.	Description	Qty	Kit
49	521996501	NUT -	12	-
50	539112899	NUT, 5/16-18, NYLOC -	21	-
51	539102653	WASHER -	4	-
52	539108120	NUT *For 967930101-00*	1	-
53	583611601	BOLT *For 967930101-00*	1	-
54	591176601	BOLT *For 967930101-00*	1	-
58	590877803	ROPS *ROPS ASSY*	1	-

SPINDLE

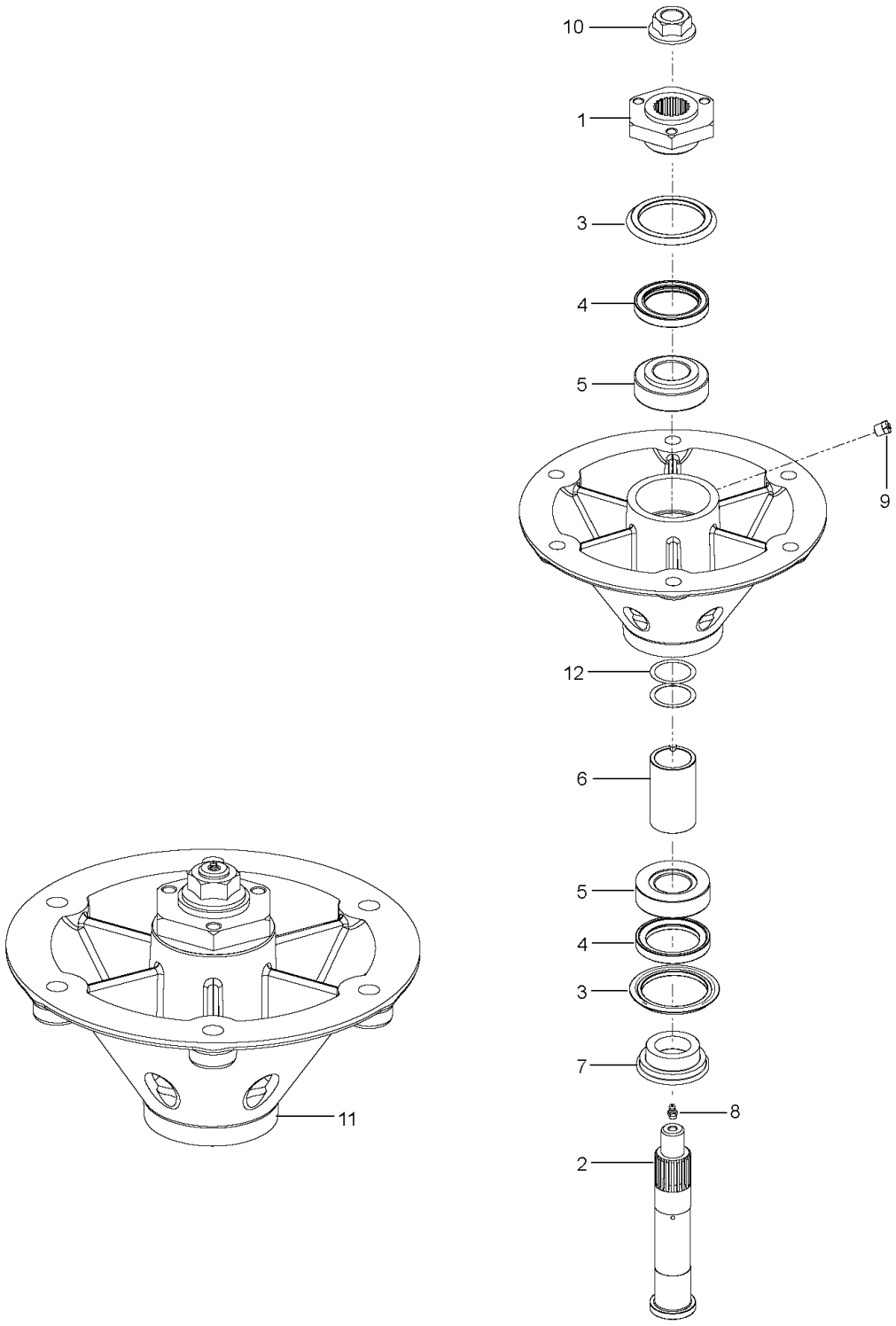

Ref.	Article N.	Description	Qty	Kit
1	582483902	PANEL	1	-
2	582483602	PANEL	1	-
3	586161801	HOUR METER	1	-
4	574455401	SWITCH	1	-
5	589887201	SWITCH	1	-

Ref.	Article N.	Description	Qty	Kit
6	574455501	KEY	1	-
7	581878301	LIGHT *For 967930101-00, 967678701-00*	1	-
7	574206901	CABLE *CHOKE/ For 96767860300, 96767860200, 96767860101*	1	-
8	582120301	THROTTLE CONTROL *46*	1	-
9	589819501	BATTERY *MX-9/ For 967930101-00, 967678701-00, 967678601-00*	1	-
9	589819502	BATTERY *MX-12/ For 967930101-00, 967678701-00, 967678601-00*	1	-
9	589819503	BATTERY *MX-14/ For 96767860300, 96767860200, 96767860101*	1	-
9	582460606	BRACKET *MX-14*	1	-
9	596990201	SERVICE KIT *MX-12 Bracket (Battery not included) For 967930101-00, 967678701-00, 967678601-00*	1	-
10	539103178	NUT CAP	1	-
11	539132624	KNOB	1	-
12	539102759	INSULATOR	2	-
13	592872701	FUEL GAUGE	2	-
14	539114341	SCREW	6	-
15	532199855	SCREW	2	-
16	582460801	SCREW	2	-
21	593777801	HARNESS *FOR CARB ENGINES*	1	-
21	593777803	HARNESS *FOR KOHLER & YAMAHA EFI*	1	-
22	589838501	HARNESS	1	-
23	574514001	TIMER *NOT SHOWN*	1	-
24	590632101	CABLE *NOT SHOWN*	1	-
25	539101714	SOLENOID *NOT SHOWN (SOLENOID KAW FX)*	1	-
1	574437301	DECAL *BELT ROUTING*	1	-
2	590209401	DECAL *MOTION/BRAKE RIGHT*	1	-
3	590209501	DECAL *MOTION_BRAKE_LEFT*	1	-

Ref.	Article N.	Description	Qty	Kit
3	590807601	DECAL *Z554X*	1	-
4	581724301	DECAL *NO STEP*	2	-
5	539105745	DECAL *BATTERY WARNING*	1	-
6	539105744	DECAL *DANGER BELT*	2	-
7	581724401	DECAL *DEFLECTOR WARNING*	1	-
8	532424102	DECAL *SPARK ARRESTOR*	1	-
9	574455001	DECAL *CROWN LARGE*	1	-
10	574569006	DECAL *ROPS/ For 96767860300, 96767860200,*	1	-
10	593011101	DECAL *ROPS/ For 967930101-00, 967678701-00, 967678601-00*	1	-
11	574569002	DECAL *ROPS WARNING*	1	-
12	574569401	DECAL *FUSE*	1	-
13	584904601	DECAL *DECK/DEFLECT WARNING*	1	-
14	532428676	DECAL *CROWN SMALL*	1	-
15	590799301	DECAL *DECK HEIGHT*	1	-
16	590210001	DECAL *COMMERCIAL*	1	-
17	590846801	DECAL *MAINTANCE/SERVICE*	1	-
18	590210301	DECAL *CONTROL PANEL RIGHT - CHOKE /For 96767860300, 96767860200, 96767860101*	1	-
18	590210302	DECAL *CONTROL PANEL RIGHT-EFI/ For 967930101-00, 967678701-00, 967678601-00*	1	-
19	590210501	DECAL *CONTROL PANEL LEFT*	1	-
20	590209701	DECAL *TRANSMISSION WARNING*	1	-
21	590209202	DECAL	1	-

Ref.	Article N.	Description	Qty	Kit
		START W/ CHOKE		
22	577469001	DECAL *EMBLEM*	2	-
30	577150101	DECAL *FUEL - NOT SHOWN*	1	-
31	590807801	DECAL *Z560X / For 967678601-00, 967678701-00*	1	-
32	590807901	DECAL *Z572X / For 967678601-00, 967678701-00*	1	-
1	582733302	PLATE -	1	-
2	525749501	CLUTCH -	1	-
3	522676702	STOP -	1	-
4	539118911	NIPPLE -	1	-
5	522837001	PLUG -	1	-
6	510019801	PULLEY -	1	-
7	539119680	ADAPTER -	1	-
8	539105072	90DEG.ELBOW 3/8NPT -	1	-
9	525749901	KEY -	1	-
10	587886001	MUFFLER -	1	-
11	539109618	O-RING -	1	-
12	505280001	TIE WRAP -	1	-
13	581332801	BOLT -	1	-
14	574233801	SCREW -	4	-
15	539990563	SCREW -	4	-
16	874780716	BOLT -	1	-
17	539990208	SCREW -	2	-

Ref.	Article N.	Description	Qty	Kit
18	539102933	SCREW -	2	-
19	539108120	NUT -	1	-
20	539112899	NUT, 5/16-18, NYLOC -	8	-
21	539102582	NUT -	1	-
22	539102593	WASHER -	4	-
23	539990247	WASHER -	1	-
24	539125626	WASHER -	1	-
25	586839701	GASKET *NOT SHOWN*	2	-
1	582483105	FUEL TANK ASSY *For 96767860300, 96767860200, 96767860101, 967678701-00, 967678601-00*	1	-
1	590680505	TANK UNIT ASSY *For 967930101-00*	1	-
2	582481705	FUEL TANK ASSY *For 96767860300, 96767860200, 96767860101, 967678701-00, 967678601-00*	1	-
2	590680405	TANK UNIT ASSY *For 967930101-00*	1	-
3	587044550	HOSE -	1	-
4	587044526	HOSE -	1	-
5	587044517	HOSE -	1	-
6	587044846	HOSE -	1	-
7	587044808	HOSE *For 967930101-00*	1	-
7	587044833	HOSE *For 96767860300, 96767860200, 96767860101, 967678701-00, 967678601-00*	1	-
8	587044824	HOSE -	1	-
9	574206602	FITTING -	1	-
10	575018101	CAP -	2	-
11	582483301	GUARD	1	-

Ref.	Article N.	Description	Qty	Kit
		-		
12	590638801	SENSOR -	2	-
13	576618101	TANK VENT -	2	-
14	539102679	VALVE -	1	-
15	582482301	GUARD -	1	-
15	525865402	TUBE ASSY -	1	-
16	532003645	BUSHING -	2	-
17	590209101	GROMMET -	2	-
18	584648201	GROMMET -	2	-
19	582481502	BRACKET -	2	-
20	582481602	BRACKET -	2	-
20	525865403	TUBE ASSY -	1	-
21	582483401	COVER -	1	-
22	539912222	CLAMP -	6	-
23	575436501	CLAMP -	6	-
24	582482601	CLIP -	8	-
25	505280001	TIE WRAP -	5	-
26	874490548	BOLT -	6	-
27	582482401	COVER -	1	-
27	590257301	SCREW -	6	-
28	817490516	SCREW -	6	-
29	582484201	SCREW -	8	-

Ref.	Article N.	Description	Qty	Kit
30	539112899	NUT, 5/16-18, NYLOC -	20	-
31	532126684	SHIM -	6	-
1	591359901	SHIELD -	1	-
2	582461206	BRACKET -	1	-
3	539102587	ABSORBER -	4	-
4	582461701	HOLDER ASSY -	3	-
5	582461303	ROD -	2	-
6	874780412	BOLT -	3	-
7	874490548	BOLT -	4	-
8	503200001	SCREW EHHFM -	3	-
9	587592101	SCREW -	4	-
10	521991101	NUT -	2	-
11	539112899	NUT, 5/16-18, NYLOC -	8	-
12	532191730	NUT -	3	-
13	731231405	HEXAGON NUT -	3	-
14	873350800	NUT -	2	-
1	582463102	ARM -	1	-
2	501603701	BEARING -	2	-
3	582479102	BRACKET -	4	-
4	582480101	CLAMP -	4	-
5	529311401	FITTING -	2	-
6	582479404	FRAME	1	-

Ref.	Article N.	Description	Qty	Kit
		-		
7	582480204	HOSE -	2	-
8	586933802	MOUNT -	1	-
9	582468101	SHAFT -	1	-
10	587654101	PULLEY -	2	-
11	582716201	ROD END -	1	-
12	582468401	SPRING -	1	-
13	574499201	TANK -	2	-
14	582480001	TRANSMISSION -	1	-
15	582480002	TRANSMISSION -	1	-
16	576127201	FILTER -	1	-
17	582480402	V-BELT -	1	-
18	874490652	SCREW -	1	-
19	574210601	SCREW -	8	-
20	525828901	BOLT *For 96767860300, 96767860200, 96767860101*	8	-
20	874490848	SCREW *For 967930101-00, 967678701-00, 967678601-00*	8	-
21	539100145	BOLT -	2	-
22	539990645	BOLT -	2	-
23	532165857	SCREW -	4	-
24	539913847	BOLT -	1	-
25	521991101	NUT -	8	-
26	521996501	NUT -	6	-

Ref.	Article N.	Description	Qty	Kit
27	819133210	WASHER -	1	-
1	591359704	CUTTING DECK -	1	-
2	588264805	DRIVE BELT -	1	-
3	575265901	BLADE -	3	-
4	582462702	ARM -	1	-
5	521979701	PULLEY -	3	-
6	510015101	PULLEY -	3	-
7	582463003	PULLEY -	1	-
8	582463006	PULLEY -	1	-
9	582468801	CHUTE -	1	-
10	510254501	SHIELD -	3	-
11	574169601	ROLLER -	4	-
12	574196401	TUBE -	2	-
13	574196501	TUBE -	1	-
14	539131518	BEARING -	2	-
15	510263701	BEARING -	2	-
16	582467302	BRACKET -	1	-
17	582463203	BRACKET *For 96767860300, 96767860200, 96767860101, 967678701-00, 967678601-00*	1	-
17	582463207	BRACKET *For 967930101-00*	1	-
18	582463204	BRACKET *For 96767860300, 96767860200, 96767860101, 967678701-00, 967678601-00*	1	-
18	582463208	BRACKET *For 967930101-00*	1	-
19	582472502	BELT GUARD	1	-

Ref.	Article N.	Description	Qty	Kit
		For 96767860300, 96767860200, 96767860101, 967678701-00, 967678601-00		
19	594913302	BELT GUIDE *For 967930101-00*	1	-
20	582470201	KEEPER -	1	-
21	539104411	KNOB -	2	-
22	590523702	PLATE -	1	-
23	582466401	PLATE -	1	-
24	582468101	SHAFT -	1	-
25	582468301	SPACER -	1	-
26	589455201	SPACER -	1	-
27	582468001	SPRING -	1	-
28	510437502	BAFFLE -	1	-
29	539104763	CLIP -	2	-
30	539115620	1/4-20X3/4 CARR BLT -	4	-
31	872140610	BOLT -	3	-
32	510022301	SCREW -	2	-
33	872140628	BOLT -	2	-
34	872140864	BOLT -	1	-
35	874490644	BOLT -	2	-
36	574210601	SCREW -	18	-
37	525612801	SCREW -	2	-
38	521996601	SCREW -	1	-
39	582476401	SCREW -	4	-

Ref.	Article N.	Description	Qty	Kit
40	539130315	BOLT -	9	-
41	539119007	SCREW -	3	-
42	574202001	BOLT -	1	-
43	539913847	BOLT -	1	-
44	521996501	NUT -	10	-
45	539112899	NUT, 5/16-18, NYLOC -	4	-
46	521991101	NUT -	3	-
47	539109332	NUT -	1	-
48	539976978	NUT -	4	-
49	539106504	WASHER -	2	-
50	539109600	WASHER -	9	-
1	582462602	SHAFT -	1	-
2	592654001	ARM -	1	-
2	592654002	ARM -	1	-
3	582465402	ARM -	2	-
4	582463902	ARM -	2	-
5	582462001	ARM -	1	-
6	582462002	ARM -	1	-
7	582464601	ROD -	2	-
8	582472801	ROD -	1	-
9	582471401	ROD -	1	-
10	510408301	PEDAL	1	-

Ref.	Article N.	Description	Qty	Kit
		-		
11	510089501	PAD -	1	-
12	510023902	BLOCK -	4	-
13	582467201	BLOCK -	1	-
14	582466902	BRACKET -	1	-
15	582468902	BRACKET -	2	-
16	589454103	LEVER -	1	-
17	592654101	LEVER -	1	-
18	539109693	LIFT CHAIN - 3 LINK -	2	-
18	589454104	LEVER -	1	-
19	539102641	CHAIN -	2	-
20	582464801	PIVOT -	2	-
21	582763902	PLATE -	1	-
22	589453201	LEVER ASSY -	1	-
23	582469001	SHACKLE -	2	-
24	582464201	SHAFT -	2	-
25	593091801	SPRING -	2	-
26	582471301	SPRING -	1	-
27	582467001	SWIVEL -	1	-
28	582467101	SWIVEL -	1	-
29	582469901	BUSHING -	2	-
30	582469801	BUSHING -	2	-

Ref.	Article N.	Description	Qty	Kit
31	510089201	BUSHING -	5	-
32	539912730	RING -	1	-
33	539990870	RING -	2	-
34	590465501	PIN -	1	-
35	539102889	SPLIT PIN -	2	-
36	582466701	SCREW -	4	-
37	582472601	SCREW -	2	-
38	574202001	BOLT -	2	-
39	539990580	SCREW -	1	-
40	589786001	SCREW -	4	-
41	501064102	SCREW -	3	-
42	501064101	SCREW -	4	-
43	510408201	BOLT -	1	-
44	539101175	SCREW -	4	-
45	582465601	SCREW -	2	-
46	589677701	NUT -	3	-
47	539976978	NUT -	1	-
48	539990546	NUT -	2	-
49	539119124	NUT -	4	-
50	539110340	NUT -	3	-
51	521996501	NUT -	6	-
52	539112899	NUT, 5/16-18, NYLOC	2	-

Ref.	Article N.	Description	Qty	Kit
		-		
53	539132019	NUT -	4	-
54	582466601	NUT -	4	-
55	539108732	NUT 3/8-24 HEX JAM ZD -	2	-
56	539991043	BUSHING -	2	-
1	579866104	SEAT ASSY -	1	-
1	582460103	SEAT *Fits 97058500100*	1	-
2	582478801	BAR -	1	-
3	582478201	BRACKET -	2	-
4	590555002	BRACKET -	1	-
5	590481801	ISOLATOR -	8	-
6	539116377	INSERT -	4	-
7	590373501	LATCH -	1	-
8	590506802	PLATE -	1	-
9	590507201	ROD -	1	-
10	539113952	SPRING -	2	-
11	582478101	NUT -	4	-
12	532192749	SWITCH -	1	-
13	539108392	HCS 5/16-18 X 5/8 GR 5 ZD -	4	-
14	582478901	SCREW -	2	-
15	582478501	SCREW -	2	-
16	539990316	BOLT -	8	-

Ref.	Article N.	Description	Qty	Kit
17	582478601	NUT -	2	-
18	539913847	BOLT -	1	-
19	539112899	NUT, 5/16-18, NYLOC -	6	-
20	522023401	WASHER -	2	-
21	532413524	WASHER -	8	-
22	539990118	WASHER -	2	-
23	539990187	WASHER -	4	-
24	579866109	SEAT ASSY *Knob*	1	-
25	579866108	SEAT ASSY *REPLACEMENT PAD ONLY*	2	-
1	580942201	HUB -	3	-
2	580942101	SHAFT -	3	-
3	580942701	V-RING -	6	-
4	580942601	SEAL -	6	-
5	583911101	BEARING KIT *ALSO ORDER TOOL KIT*	3	-
6	580942301	SPACER -	3	-
7	580942501	CARRIER -	3	-
8	539976998	NIPPLE -	3	-
9	539977326	FITTING -	3	-
10	539130653	NUT -	3	-
11	580943306	SPINDLE -	3	-
12	580942801	SHIM *For 967678601-00, 967678701-00*	1	-
13	574754201	KIT	1	-

Ref.	Article N.	Description	Qty	Kit
		NOT SHOWN		
1	582475501	LEVER *LEFT*	1	-
2	582475502	LEVER *RIGHT*	1	-
3	596925601	ROD *RIGHT SIDE ASSY*	1	-
3	596925701	ROD *LEFT SIDE ASSY*	1	-
3	598852501	SERVICE KIT *COUPLER KIT. CONTAINS (2) COUPLERS THAT FITS BOTH LH/RH SIDES. REF # 4 SCREWS INTO THIS COUPLER*	1	-
4	588692502	ROD *ROD.END.MALE.LH THREAD*	2	-
5	579764601	JOINT *JOINT.RH.THREAD.FEMALE.5/16*	2	-
6	539923515	SPACER	2	-
7	597744702	BRACKET	2	-
8	592653801	CARRIER *w/BEARINGS LEFT*	1	-
8	592653802	CARRIER *w/BEARINGS RIGHT*	1	-
9	592653901	CARRIER	2	-
12	582477802	BRACKET *LEFT*	1	-
12	582477804	BRACKET *RIGHT*	1	-
13	582476902	BRACKET	2	-
14	582475102	BRACKET	4	-
15	587225301	PIN	2	-
16	582551901	CLIP	2	-
17	588775401	DAMPER	2	-
18	582477401	PIN	2	-
19	589505102	PIVOT	2	-
20	589489601	RETAINER	2	-
21	589500902	SWITCH	2	-
22	582475001	SPACER	2	-
23	582711303	SPACER	2	-
24	582477001	SPRING	4	-
25	532151332	SPRING	2	-
26	582477702	SPRING	2	-

Ref.	Article N.	Description	Qty	Kit
27	597744501	ADAPTER	2	-
28	582477501	CABLE	2	-
29	539110607	STUD	4	-
30	582477602	BRACKET	2	-
31	582476801	BEARING	4	-
32	539131518	BEARING	8	-
33	532170165	BOLT	4	-
34	525544001	BOLT	4	-
35	525465402	SCREW	2	-
36	539976934	SCREW	4	-
37	582477102	SCREW	4	-
38	582476401	SCREW	4	-
39	596240801	BOLT	2	-
40	595901501	BOLT	4	-
41	577117701	SCREW	2	-
42	589505602	SCREW	2	-
44	594944401	NUT	14	-
45	596040901	HEXAGON NUT	4	-
46	521996502	NUT	6	-
47	539990184	NUT	4	-
48	596134901	WASHER	2	-
49	539990187	WASHER	4	-
50	596204101	WASHER	2	-
51	522023401	WASHER	4	-
1	582475501	LEVER -	1	-
2	582475502	LEVER -	1	-
3	501567001	ROD *For 967930101-00*	1	-
3	592653701	CONTROL *LEFT For 96767860300, 96767860200, 96767860101, 967678701. 967678601*	1	-
3	592653702	CONTROL *RIGHT*	1	-
4	588692502	ROD -	2	-
5	579764601	JOINT -	2	-
6	582484001	BELLOWS *For 967930101-00*	1	-

Ref.	Article N.	Description	Qty	Kit
6	591193301	SERVICE KIT *For 96767860300, 96767860200, 96767860101, 967678701-00, 967678601-00*	1	-
7	582484101	BELLOWS *For 967930101-00*	1	-
7	591193302	SERVICE KIT *For 96767860300, 96767860200, 96767860101, 967678701-00, 967678601-00*	1	-
8	592653801	CARRIER *w/BEARINGS LEFT/ For 96767860300, 96767860200, 96767860101, 967678701-00, 967678601-00*	1	-
8	592653802	CARRIER *w/BEARINGS LEFT/ For 967930101-00*	1	-
9	592653901	CARRIER -	2	-
10	592724002	CONTROL -	1	-
10	592724001	CONTROL -	1	-
11	592653501	PARKING BRAKE -	1	-
12	582477802	BRACKET *LEFT*	1	-
12	582477804	BRACKET *RIGHT*	1	-
13	582476901	BRACKET -	2	-
14	582475102	BRACKET -	4	-
15	587225301	PIN -	2	-
16	582551901	CLIP -	2	-
17	588775401	DAMPER -	2	-
18	582477401	PIN -	2	-
19	589505101	PIVOT -	2	-
20	589489601	RETAINER -	2	-
21	589500901	SWITCH -	2	-
22	582475001	SPACER -	2	-

Ref.	Article N.	Description	Qty	Kit
23	582711303	SPACER -	2	-
24	582477001	SPRING -	4	-
25	532151332	SPRING -	2	-
26	582477701	SPRING -	2	-
27	582477201	YOKE -	2	-
28	582477501	CABLE -	2	-
29	539110607	STUD -	4	-
30	582477601	BRACKET -	2	-
31	582476801	BEARING -	4	-
32	539131518	BEARING -	8	-
33	539110303	BOLT -	4	-
34	525544001	BOLT -	4	-
35	525465401	SCREW -	2	-
36	539976934	SCREW -	4	-
37	582477101	SCREW -	4	-
38	582476401	SCREW -	2	-
39	539115574	EYE BOLT -	2	-
40	539990208	SCREW -	4	-
41	577117701	SCREW -	6	-
42	589505601	SCREW -	2	-
43	582482901	RIVET -	12	-
44	539112899	NUT, 5/16-18, NYLOC	14	-

Ref.	Article N.	Description	Qty	Kit
		-		
45	539990223	NUT -	4	-
46	521996501	NUT -	6	-
47	539990184	NUT -	4	-
48	539990692	WASHER -	2	-
49	539990187	WASHER -	4	-
50	819111116	WASHER -	2	-
51	522023401	WASHER -	2	-
1	599893003	COVER -	1	-
2	599893004	COVER -	1	-
3	596564002	BOLT -	4	-
1	599156701	TIRE *fits 967669801-00, 967699802-00*	2	-
1	510154601	TIRE *Use From SN: 060117F000001 To SN: 090820F999999*	2	-
2	539105152	TIRE *24x12-12 Tire Only*	2	-
2	510154502	WHEEL RIM *Rim Only*	2	-
2	510154501	TIRE *Tire & Rim Assembly*	2	-
3	525611902	FORK -	2	-
4	510034001	CAP -	2	-
5	510034301	SEAL -	2	-
6	510034403	BEARING -	4	-
7	596623501	VALVE -	2	-
8	590690701	SPACER *Use From SN: 060117F000001 To SN: 090820F999999*	4	-

Ref.	Article N.	Description	Qty	Kit
9	590704902	SPACER *Use From SN: 060117F000001 To SN: 090820F999999*	2	-
10	594946501	BOLT -	2	-
11	522842602	NUT -	2	-
12	587653902	NUT -	8	-
13	873930800	NUT *For 967678802-01, 967678801-01*	2	-
13	521991102	NUT *For 96793040300, 967669703-01*	2	-
14	595086801	WASHER -	2	-
15	574824701	WASHER -	2	-
16	539102484	BEARING *Use after SN: 090920F000001*	4	-
17	539105307	ROLLER BEARING *Use after SN: 090920F000001*	4	-
18	539912234	VALVE *Use after SN: 090920F000001*	2	-
19	599405101	SHIM *Use after SN: 090920F000001*	2	-
20	539133007	WASHER *Use after SN: 090920F000001*	2	-
21	539105522	TIRE *13X6.5-6 Tire Only Use After SN: 090920F000001*	2	-
21	581199501	WHEEL ASSY *Use after SN: 090920F000001*	2	-
22	575334901	SPACER *Use after SN: 090920F000001*	2	-
23	596623501	VALVE -	2	-
24	597383801	SERVICE KIT *Use From SN: 060117F000001 To SN: 090820F999999*	2	-
1	597383801	SERVICE KIT -	1	-
1	510154601	TIRE -	2	-
2	522905101	TIRE -	2	-
3	525611902	FORK	2	-

Ref.	Article N.	Description	Qty	Kit
		-		
4	510034001	CAP -	2	-
4	522905102	TIRE -	2	-
5	510034301	SEAL -	2	-
6	510034403	BEARING -	4	-
7	539101474	NIPPLE -	2	-
8	590690701	SPACER -	4	-
9	590704901	SPACER -	2	-
10	539105517	BOLT -	2	-
11	522842601	NUT -	2	-
12	587653902	NUT -	8	-
13	873930800	NUT -	2	-
14	539990250	WASHER -	2	-
15	574824701	WASHER -	2	-
1	591359801	FRAME *w/ SAFETY DECALS*	1	-
2	522675702	BUMPER -	1	-
3	587898002	GUARD -	1	-
4	589808802	BRACKET -	2	-
5	589807202	BRACKET -	1	-
6	589448202	BRACKET -	1	-
7	589448204	BRACKET -	1	-
8	582481101	BRACKET -	2	-

Ref.	Article N.	Description	Qty	Kit
9	582481002	PANEL *For 96767860300, 96767860200, 96767860101, 967678701-00, 967678601-00*	1	-
9	595327502	PANEL *For 967930101-00*	1	-
10	582481004	PANEL -	1	-
11	582480803	PANEL -	1	-
12	582480804	PANEL -	1	-
13	589304602	PLATE -	1	-
14	574228602	PLATE *For 96767860300, 96767860200, 96767860101, 967678701-00, 967678601-00*	1	-
14	596694102	PLATE *For 967930101-00*	1	-
15	582478701	BUMPER -	2	-
16	575811501	BUMPER -	2	-
17	522801401	BUMPER -	4	-
18	539102587	ABSORBER -	2	-
19	589745202	COVER -	1	-
20	582480502	CROSS MEMBER -	1	-
21	589744001	ISOLATOR -	2	-
22	539104411	KNOB -	1	-
23	591344501	KNOB -	2	-
24	591101701	PIN -	2	-
25	591101601	PIN -	2	-
26	582460702	PLATE -	1	-
27	582460606	BRACKET *MX-14*	1	-
28	589500701	BRACKET	1	-

Ref.	Article N.	Description	Qty	Kit
		-		
29	539104763	CLIP -	7	-
30	589806801	NUT -	2	-
31	539111028	NUTSERT 5/16-18 THICK GRIP -	2	-
32	525612801	SCREW -	4	-
33	574233801	SCREW -	2	-
34	525544001	BOLT -	2	-
35	539113226	BOLT -	4	-
36	577117701	SCREW -	4	-
37	539100145	BOLT -	2	-
38	872140404	BOLT -	4	-
39	872140406	BOLT *For 96767860300, 96767860200, 96767860101, 967678701-00, 967678601-00*	2	-
39	539115620	1/4-20X3/4 CARR BLT *For 967930101-00*	2	-
40	539990316	BOLT -	14	-
41	539990208	SCREW -	2	-
42	539110303	BOLT -	4	-
43	580754601	BOLT -	6	-
44	589797201	SCREW -	2	-
45	817490408	SCREW -	2	-
46	585986101	BOLT -	2	-
47	525829101	NUT -	6	-
48	539976978	NUT -	6	-

Ref.	Article N.	Description	Qty	Kit
49	521996501	NUT -	12	-
50	539112899	NUT, 5/16-18, NYLOC -	21	-
51	539102653	WASHER -	4	-
52	539108120	NUT *For 967930101-00*	1	-
53	583611601	BOLT *For 967930101-00*	1	-
54	591176601	BOLT *For 967930101-00*	1	-
58	590877803	ROPS *ROPS ASSY*	1	-

STEERING - CONTROLS AND DAMPER

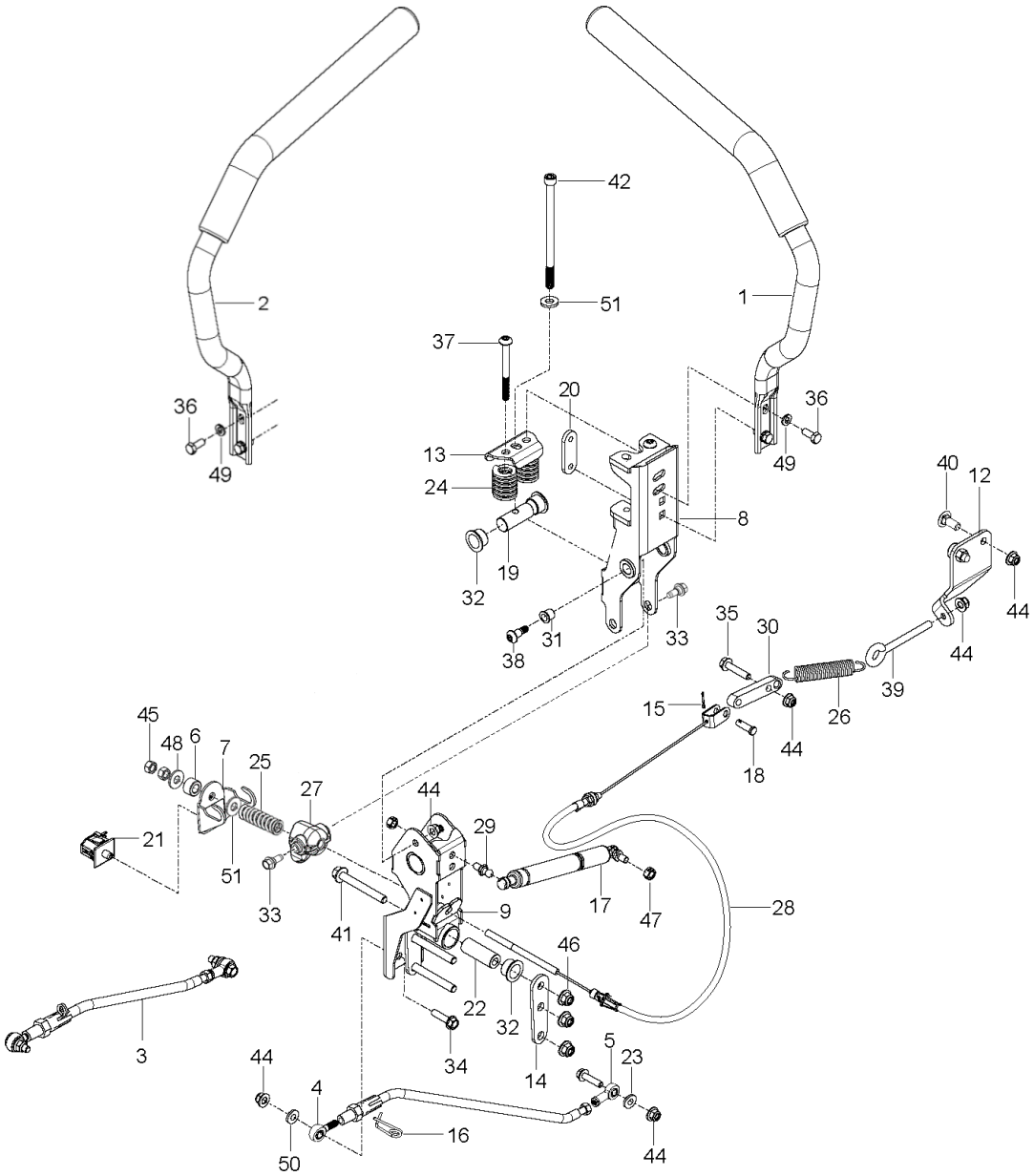

Ref.	Article N.	Description	Qty	Kit
1	582483902	PANEL	1	-
2	582483602	PANEL	1	-
3	586161801	HOUR METER	1	-
4	574455401	SWITCH	1	-
5	589887201	SWITCH	1	-

Ref.	Article N.	Description	Qty	Kit
6	574455501	KEY	1	-
7	581878301	LIGHT *For 967930101-00, 967678701-00*	1	-
7	574206901	CABLE *CHOKE/ For 96767860300, 96767860200, 96767860101*	1	-
8	582120301	THROTTLE CONTROL *46*	1	-
9	589819501	BATTERY *MX-9/ For 967930101-00, 967678701-00, 967678601-00*	1	-
9	589819502	BATTERY *MX-12/ For 967930101-00, 967678701-00, 967678601-00*	1	-
9	589819503	BATTERY *MX-14/ For 96767860300, 96767860200, 96767860101*	1	-
9	582460606	BRACKET *MX-14*	1	-
9	596990201	SERVICE KIT *MX-12 Bracket (Battery not included) For 967930101-00, 967678701-00, 967678601-00*	1	-
10	539103178	NUT CAP	1	-
11	539132624	KNOB	1	-
12	539102759	INSULATOR	2	-
13	592872701	FUEL GAUGE	2	-
14	539114341	SCREW	6	-
15	532199855	SCREW	2	-
16	582460801	SCREW	2	-
21	593777801	HARNESS *FOR CARB ENGINES*	1	-
21	593777803	HARNESS *FOR KOHLER & YAMAHA EFI*	1	-
22	589838501	HARNESS	1	-
23	574514001	TIMER *NOT SHOWN*	1	-
24	590632101	CABLE *NOT SHOWN*	1	-
25	539101714	SOLENOID *NOT SHOWN (SOLENOID KAW FX)*	1	-
1	574437301	DECAL *BELT ROUTING*	1	-
2	590209401	DECAL *MOTION/BRAKE RIGHT*	1	-
3	590209501	DECAL *MOTION_BRAKE_LEFT*	1	-

Ref.	Article N.	Description	Qty	Kit
3	590807601	DECAL *Z554X*	1	-
4	581724301	DECAL *NO STEP*	2	-
5	539105745	DECAL *BATTERY WARNING*	1	-
6	539105744	DECAL *DANGER BELT*	2	-
7	581724401	DECAL *DEFLECTOR WARNING*	1	-
8	532424102	DECAL *SPARK ARRESTOR*	1	-
9	574455001	DECAL *CROWN LARGE*	1	-
10	574569006	DECAL *ROPS/ For 96767860300, 96767860200,*	1	-
10	593011101	DECAL *ROPS/ For 967930101-00, 967678701-00, 967678601-00*	1	-
11	574569002	DECAL *ROPS WARNING*	1	-
12	574569401	DECAL *FUSE*	1	-
13	584904601	DECAL *DECK/DEFLECT WARNING*	1	-
14	532428676	DECAL *CROWN SMALL*	1	-
15	590799301	DECAL *DECK HEIGHT*	1	-
16	590210001	DECAL *COMMERCIAL*	1	-
17	590846801	DECAL *MAINTANCE/SERVICE*	1	-
18	590210301	DECAL *CONTROL PANEL RIGHT - CHOKE /For 96767860300, 96767860200, 96767860101*	1	-
18	590210302	DECAL *CONTROL PANEL RIGHT-EFI/ For 967930101-00, 967678701-00, 967678601-00*	1	-
19	590210501	DECAL *CONTROL PANEL LEFT*	1	-
20	590209701	DECAL *TRANSMISSION WARNING*	1	-
21	590209202	DECAL	1	-

Ref.	Article N.	Description	Qty	Kit
		START W/ CHOKE		
22	577469001	DECAL *EMBLEM*	2	-
30	577150101	DECAL *FUEL - NOT SHOWN*	1	-
31	590807801	DECAL *Z560X / For 967678601-00, 967678701-00*	1	-
32	590807901	DECAL *Z572X / For 967678601-00, 967678701-00*	1	-
1	582733302	PLATE -	1	-
2	525749501	CLUTCH -	1	-
3	522676702	STOP -	1	-
4	539118911	NIPPLE -	1	-
5	522837001	PLUG -	1	-
6	510019801	PULLEY -	1	-
7	539119680	ADAPTER -	1	-
8	539105072	90DEG.ELBOW 3/8NPT -	1	-
9	525749901	KEY -	1	-
10	587886001	MUFFLER -	1	-
11	539109618	O-RING -	1	-
12	505280001	TIE WRAP -	1	-
13	581332801	BOLT -	1	-
14	574233801	SCREW -	4	-
15	539990563	SCREW -	4	-
16	874780716	BOLT -	1	-
17	539990208	SCREW -	2	-

Ref.	Article N.	Description	Qty	Kit
18	539102933	SCREW -	2	-
19	539108120	NUT -	1	-
20	539112899	NUT, 5/16-18, NYLOC -	8	-
21	539102582	NUT -	1	-
22	539102593	WASHER -	4	-
23	539990247	WASHER -	1	-
24	539125626	WASHER -	1	-
25	586839701	GASKET *NOT SHOWN*	2	-
1	582483105	FUEL TANK ASSY *For 96767860300, 96767860200, 96767860101, 967678701-00, 967678601-00*	1	-
1	590680505	TANK UNIT ASSY *For 967930101-00*	1	-
2	582481705	FUEL TANK ASSY *For 96767860300, 96767860200, 96767860101, 967678701-00, 967678601-00*	1	-
2	590680405	TANK UNIT ASSY *For 967930101-00*	1	-
3	587044550	HOSE -	1	-
4	587044526	HOSE -	1	-
5	587044517	HOSE -	1	-
6	587044846	HOSE -	1	-
7	587044808	HOSE *For 967930101-00*	1	-
7	587044833	HOSE *For 96767860300, 96767860200, 96767860101, 967678701-00, 967678601-00*	1	-
8	587044824	HOSE -	1	-
9	574206602	FITTING -	1	-
10	575018101	CAP -	2	-
11	582483301	GUARD	1	-

Ref.	Article N.	Description	Qty	Kit
		-		
12	590638801	SENSOR -	2	-
13	576618101	TANK VENT -	2	-
14	539102679	VALVE -	1	-
15	582482301	GUARD -	1	-
15	525865402	TUBE ASSY -	1	-
16	532003645	BUSHING -	2	-
17	590209101	GROMMET -	2	-
18	584648201	GROMMET -	2	-
19	582481502	BRACKET -	2	-
20	582481602	BRACKET -	2	-
20	525865403	TUBE ASSY -	1	-
21	582483401	COVER -	1	-
22	539912222	CLAMP -	6	-
23	575436501	CLAMP -	6	-
24	582482601	CLIP -	8	-
25	505280001	TIE WRAP -	5	-
26	874490548	BOLT -	6	-
27	582482401	COVER -	1	-
27	590257301	SCREW -	6	-
28	817490516	SCREW -	6	-
29	582484201	SCREW -	8	-

Ref.	Article N.	Description	Qty	Kit
30	539112899	NUT, 5/16-18, NYLOC -	20	-
31	532126684	SHIM -	6	-
1	591359901	SHIELD -	1	-
2	582461206	BRACKET -	1	-
3	539102587	ABSORBER -	4	-
4	582461701	HOLDER ASSY -	3	-
5	582461303	ROD -	2	-
6	874780412	BOLT -	3	-
7	874490548	BOLT -	4	-
8	503200001	SCREW EHHFM -	3	-
9	587592101	SCREW -	4	-
10	521991101	NUT -	2	-
11	539112899	NUT, 5/16-18, NYLOC -	8	-
12	532191730	NUT -	3	-
13	731231405	HEXAGON NUT -	3	-
14	873350800	NUT -	2	-
1	582463102	ARM -	1	-
2	501603701	BEARING -	2	-
3	582479102	BRACKET -	4	-
4	582480101	CLAMP -	4	-
5	529311401	FITTING -	2	-
6	582479404	FRAME	1	-

Ref.	Article N.	Description	Qty	Kit
		-		
7	582480204	HOSE -	2	-
8	586933802	MOUNT -	1	-
9	582468101	SHAFT -	1	-
10	587654101	PULLEY -	2	-
11	582716201	ROD END -	1	-
12	582468401	SPRING -	1	-
13	574499201	TANK -	2	-
14	582480001	TRANSMISSION -	1	-
15	582480002	TRANSMISSION -	1	-
16	576127201	FILTER -	1	-
17	582480402	V-BELT -	1	-
18	874490652	SCREW -	1	-
19	574210601	SCREW -	8	-
20	525828901	BOLT *For 96767860300, 96767860200, 96767860101*	8	-
20	874490848	SCREW *For 967930101-00, 967678701-00, 967678601-00*	8	-
21	539100145	BOLT -	2	-
22	539990645	BOLT -	2	-
23	532165857	SCREW -	4	-
24	539913847	BOLT -	1	-
25	521991101	NUT -	8	-
26	521996501	NUT -	6	-

Ref.	Article N.	Description	Qty	Kit
27	819133210	WASHER -	1	-
1	591359704	CUTTING DECK -	1	-
2	588264805	DRIVE BELT -	1	-
3	575265901	BLADE -	3	-
4	582462702	ARM -	1	-
5	521979701	PULLEY -	3	-
6	510015101	PULLEY -	3	-
7	582463003	PULLEY -	1	-
8	582463006	PULLEY -	1	-
9	582468801	CHUTE -	1	-
10	510254501	SHIELD -	3	-
11	574169601	ROLLER -	4	-
12	574196401	TUBE -	2	-
13	574196501	TUBE -	1	-
14	539131518	BEARING -	2	-
15	510263701	BEARING -	2	-
16	582467302	BRACKET -	1	-
17	582463203	BRACKET *For 96767860300, 96767860200, 96767860101, 967678701-00, 967678601-00*	1	-
17	582463207	BRACKET *For 967930101-00*	1	-
18	582463204	BRACKET *For 96767860300, 96767860200, 96767860101, 967678701-00, 967678601-00*	1	-
18	582463208	BRACKET *For 967930101-00*	1	-
19	582472502	BELT GUARD	1	-

Ref.	Article N.	Description	Qty	Kit
		For 96767860300, 96767860200, 96767860101, 967678701-00, 967678601-00		
19	594913302	BELT GUIDE *For 967930101-00*	1	-
20	582470201	KEEPER -	1	-
21	539104411	KNOB -	2	-
22	590523702	PLATE -	1	-
23	582466401	PLATE -	1	-
24	582468101	SHAFT -	1	-
25	582468301	SPACER -	1	-
26	589455201	SPACER -	1	-
27	582468001	SPRING -	1	-
28	510437502	BAFFLE -	1	-
29	539104763	CLIP -	2	-
30	539115620	1/4-20X3/4 CARR BLT -	4	-
31	872140610	BOLT -	3	-
32	510022301	SCREW -	2	-
33	872140628	BOLT -	2	-
34	872140864	BOLT -	1	-
35	874490644	BOLT -	2	-
36	574210601	SCREW -	18	-
37	525612801	SCREW -	2	-
38	521996601	SCREW -	1	-
39	582476401	SCREW -	4	-

Ref.	Article N.	Description	Qty	Kit
40	539130315	BOLT -	9	-
41	539119007	SCREW -	3	-
42	574202001	BOLT -	1	-
43	539913847	BOLT -	1	-
44	521996501	NUT -	10	-
45	539112899	NUT, 5/16-18, NYLOC -	4	-
46	521991101	NUT -	3	-
47	539109332	NUT -	1	-
48	539976978	NUT -	4	-
49	539106504	WASHER -	2	-
50	539109600	WASHER -	9	-
1	582462602	SHAFT -	1	-
2	592654001	ARM -	1	-
2	592654002	ARM -	1	-
3	582465402	ARM -	2	-
4	582463902	ARM -	2	-
5	582462001	ARM -	1	-
6	582462002	ARM -	1	-
7	582464601	ROD -	2	-
8	582472801	ROD -	1	-
9	582471401	ROD -	1	-
10	510408301	PEDAL	1	-

Ref.	Article N.	Description	Qty	Kit
		-		
11	510089501	PAD -	1	-
12	510023902	BLOCK -	4	-
13	582467201	BLOCK -	1	-
14	582466902	BRACKET -	1	-
15	582468902	BRACKET -	2	-
16	589454103	LEVER -	1	-
17	592654101	LEVER -	1	-
18	539109693	LIFT CHAIN - 3 LINK -	2	-
18	589454104	LEVER -	1	-
19	539102641	CHAIN -	2	-
20	582464801	PIVOT -	2	-
21	582763902	PLATE -	1	-
22	589453201	LEVER ASSY -	1	-
23	582469001	SHACKLE -	2	-
24	582464201	SHAFT -	2	-
25	593091801	SPRING -	2	-
26	582471301	SPRING -	1	-
27	582467001	SWIVEL -	1	-
28	582467101	SWIVEL -	1	-
29	582469901	BUSHING -	2	-
30	582469801	BUSHING -	2	-

Ref.	Article N.	Description	Qty	Kit
31	510089201	BUSHING -	5	-
32	539912730	RING -	1	-
33	539990870	RING -	2	-
34	590465501	PIN -	1	-
35	539102889	SPLIT PIN -	2	-
36	582466701	SCREW -	4	-
37	582472601	SCREW -	2	-
38	574202001	BOLT -	2	-
39	539990580	SCREW -	1	-
40	589786001	SCREW -	4	-
41	501064102	SCREW -	3	-
42	501064101	SCREW -	4	-
43	510408201	BOLT -	1	-
44	539101175	SCREW -	4	-
45	582465601	SCREW -	2	-
46	589677701	NUT -	3	-
47	539976978	NUT -	1	-
48	539990546	NUT -	2	-
49	539119124	NUT -	4	-
50	539110340	NUT -	3	-
51	521996501	NUT -	6	-
52	539112899	NUT, 5/16-18, NYLOC	2	-

Ref.	Article N.	Description	Qty	Kit
		-		
53	539132019	NUT -	4	-
54	582466601	NUT -	4	-
55	539108732	NUT 3/8-24 HEX JAM ZD -	2	-
56	539991043	BUSHING -	2	-
1	579866104	SEAT ASSY -	1	-
1	582460103	SEAT *Fits 97058500100*	1	-
2	582478801	BAR -	1	-
3	582478201	BRACKET -	2	-
4	590555002	BRACKET -	1	-
5	590481801	ISOLATOR -	8	-
6	539116377	INSERT -	4	-
7	590373501	LATCH -	1	-
8	590506802	PLATE -	1	-
9	590507201	ROD -	1	-
10	539113952	SPRING -	2	-
11	582478101	NUT -	4	-
12	532192749	SWITCH -	1	-
13	539108392	HCS 5/16-18 X 5/8 GR 5 ZD -	4	-
14	582478901	SCREW -	2	-
15	582478501	SCREW -	2	-
16	539990316	BOLT -	8	-

Ref.	Article N.	Description	Qty	Kit
17	582478601	NUT -	2	-
18	539913847	BOLT -	1	-
19	539112899	NUT, 5/16-18, NYLOC -	6	-
20	522023401	WASHER -	2	-
21	532413524	WASHER -	8	-
22	539990118	WASHER -	2	-
23	539990187	WASHER -	4	-
24	579866109	SEAT ASSY *Knob*	1	-
25	579866108	SEAT ASSY *REPLACEMENT PAD ONLY*	2	-
1	580942201	HUB -	3	-
2	580942101	SHAFT -	3	-
3	580942701	V-RING -	6	-
4	580942601	SEAL -	6	-
5	583911101	BEARING KIT *ALSO ORDER TOOL KIT*	3	-
6	580942301	SPACER -	3	-
7	580942501	CARRIER -	3	-
8	539976998	NIPPLE -	3	-
9	539977326	FITTING -	3	-
10	539130653	NUT -	3	-
11	580943306	SPINDLE -	3	-
12	580942801	SHIM *For 967678601-00, 967678701-00*	1	-
13	574754201	KIT	1	-

Ref.	Article N.	Description	Qty	Kit
		NOT SHOWN		
1	582475501	LEVER *LEFT*	1	-
2	582475502	LEVER *RIGHT*	1	-
3	596925601	ROD *RIGHT SIDE ASSY*	1	-
3	596925701	ROD *LEFT SIDE ASSY*	1	-
3	598852501	SERVICE KIT *COUPLER KIT. CONTAINS (2) COUPLERS THAT FITS BOTH LH/RH SIDES. REF # 4 SCREWS INTO THIS COUPLER*	1	-
4	588692502	ROD *ROD.END.MALE.LH THREAD*	2	-
5	579764601	JOINT *JOINT.RH.THREAD.FEMALE.5/16*	2	-
6	539923515	SPACER	2	-
7	597744702	BRACKET	2	-
8	592653801	CARRIER *w/BEARINGS LEFT*	1	-
8	592653802	CARRIER *w/BEARINGS RIGHT*	1	-
9	592653901	CARRIER	2	-
12	582477802	BRACKET *LEFT*	1	-
12	582477804	BRACKET *RIGHT*	1	-
13	582476902	BRACKET	2	-
14	582475102	BRACKET	4	-
15	587225301	PIN	2	-
16	582551901	CLIP	2	-
17	588775401	DAMPER	2	-
18	582477401	PIN	2	-
19	589505102	PIVOT	2	-
20	589489601	RETAINER	2	-
21	589500902	SWITCH	2	-
22	582475001	SPACER	2	-
23	582711303	SPACER	2	-
24	582477001	SPRING	4	-
25	532151332	SPRING	2	-
26	582477702	SPRING	2	-

Ref.	Article N.	Description	Qty	Kit
27	597744501	ADAPTER	2	-
28	582477501	CABLE	2	-
29	539110607	STUD	4	-
30	582477602	BRACKET	2	-
31	582476801	BEARING	4	-
32	539131518	BEARING	8	-
33	532170165	BOLT	4	-
34	525544001	BOLT	4	-
35	525465402	SCREW	2	-
36	539976934	SCREW	4	-
37	582477102	SCREW	4	-
38	582476401	SCREW	4	-
39	596240801	BOLT	2	-
40	595901501	BOLT	4	-
41	577117701	SCREW	2	-
42	589505602	SCREW	2	-
44	594944401	NUT	14	-
45	596040901	HEXAGON NUT	4	-
46	521996502	NUT	6	-
47	539990184	NUT	4	-
48	596134901	WASHER	2	-
49	539990187	WASHER	4	-
50	596204101	WASHER	2	-
51	522023401	WASHER	4	-
1	582475501	LEVER -	1	-
2	582475502	LEVER -	1	-
3	501567001	ROD *For 967930101-00*	1	-
3	592653701	CONTROL *LEFT For 96767860300, 96767860200, 96767860101, 967678701. 967678601*	1	-
3	592653702	CONTROL *RIGHT*	1	-
4	588692502	ROD -	2	-
5	579764601	JOINT -	2	-
6	582484001	BELLOWS *For 967930101-00*	1	-

Ref.	Article N.	Description	Qty	Kit
6	591193301	SERVICE KIT *For 96767860300, 96767860200, 96767860101, 967678701-00, 967678601-00*	1	-
7	582484101	BELLOWS *For 967930101-00*	1	-
7	591193302	SERVICE KIT *For 96767860300, 96767860200, 96767860101, 967678701-00, 967678601-00*	1	-
8	592653801	CARRIER *w/BEARINGS LEFT/ For 96767860300, 96767860200, 96767860101, 967678701-00, 967678601-00*	1	-
8	592653802	CARRIER *w/BEARINGS LEFT/ For 967930101-00*	1	-
9	592653901	CARRIER -	2	-
10	592724002	CONTROL -	1	-
10	592724001	CONTROL -	1	-
11	592653501	PARKING BRAKE -	1	-
12	582477802	BRACKET *LEFT*	1	-
12	582477804	BRACKET *RIGHT*	1	-
13	582476901	BRACKET -	2	-
14	582475102	BRACKET -	4	-
15	587225301	PIN -	2	-
16	582551901	CLIP -	2	-
17	588775401	DAMPER -	2	-
18	582477401	PIN -	2	-
19	589505101	PIVOT -	2	-
20	589489601	RETAINER -	2	-
21	589500901	SWITCH -	2	-
22	582475001	SPACER -	2	-

Ref.	Article N.	Description	Qty	Kit
23	582711303	SPACER -	2	-
24	582477001	SPRING -	4	-
25	532151332	SPRING -	2	-
26	582477701	SPRING -	2	-
27	582477201	YOKE -	2	-
28	582477501	CABLE -	2	-
29	539110607	STUD -	4	-
30	582477601	BRACKET -	2	-
31	582476801	BEARING -	4	-
32	539131518	BEARING -	8	-
33	539110303	BOLT -	4	-
34	525544001	BOLT -	4	-
35	525465401	SCREW -	2	-
36	539976934	SCREW -	4	-
37	582477101	SCREW -	4	-
38	582476401	SCREW -	2	-
39	539115574	EYE BOLT -	2	-
40	539990208	SCREW -	4	-
41	577117701	SCREW -	6	-
42	589505601	SCREW -	2	-
43	582482901	RIVET -	12	-
44	539112899	NUT, 5/16-18, NYLOC	14	-

Ref.	Article N.	Description	Qty	Kit
		-		
45	539990223	NUT -	4	-
46	521996501	NUT -	6	-
47	539990184	NUT -	4	-
48	539990692	WASHER -	2	-
49	539990187	WASHER -	4	-
50	819111116	WASHER -	2	-
51	522023401	WASHER -	2	-
1	599893003	COVER -	1	-
2	599893004	COVER -	1	-
3	596564002	BOLT -	4	-
1	599156701	TIRE *fits 967669801-00, 967699802-00*	2	-
1	510154601	TIRE *Use From SN: 060117F000001 To SN: 090820F999999*	2	-
2	539105152	TIRE *24x12-12 Tire Only*	2	-
2	510154502	WHEEL RIM *Rim Only*	2	-
2	510154501	TIRE *Tire & Rim Assembly*	2	-
3	525611902	FORK -	2	-
4	510034001	CAP -	2	-
5	510034301	SEAL -	2	-
6	510034403	BEARING -	4	-
7	596623501	VALVE -	2	-
8	590690701	SPACER *Use From SN: 060117F000001 To SN: 090820F999999*	4	-

Ref.	Article N.	Description	Qty	Kit
9	590704902	SPACER *Use From SN: 060117F000001 To SN: 090820F999999*	2	-
10	594946501	BOLT -	2	-
11	522842602	NUT -	2	-
12	587653902	NUT -	8	-
13	873930800	NUT *For 967678802-01, 967678801-01*	2	-
13	521991102	NUT *For 96793040300, 967669703-01*	2	-
14	595086801	WASHER -	2	-
15	574824701	WASHER -	2	-
16	539102484	BEARING *Use after SN: 090920F000001*	4	-
17	539105307	ROLLER BEARING *Use after SN: 090920F000001*	4	-
18	539912234	VALVE *Use after SN: 090920F000001*	2	-
19	599405101	SHIM *Use after SN: 090920F000001*	2	-
20	539133007	WASHER *Use after SN: 090920F000001*	2	-
21	539105522	TIRE *13X6.5-6 Tire Only Use After SN: 090920F000001*	2	-
21	581199501	WHEEL ASSY *Use after SN: 090920F000001*	2	-
22	575334901	SPACER *Use after SN: 090920F000001*	2	-
23	596623501	VALVE -	2	-
24	597383801	SERVICE KIT *Use From SN: 060117F000001 To SN: 090820F999999*	2	-
1	597383801	SERVICE KIT -	1	-
1	510154601	TIRE -	2	-
2	522905101	TIRE -	2	-
3	525611902	FORK	2	-

Ref.	Article N.	Description	Qty	Kit
		-		
4	510034001	CAP -	2	-
4	522905102	TIRE -	2	-
5	510034301	SEAL -	2	-
6	510034403	BEARING -	4	-
7	539101474	NIPPLE -	2	-
8	590690701	SPACER -	4	-
9	590704901	SPACER -	2	-
10	539105517	BOLT -	2	-
11	522842601	NUT -	2	-
12	587653902	NUT -	8	-
13	873930800	NUT -	2	-
14	539990250	WASHER -	2	-
15	574824701	WASHER -	2	-
1	591359801	FRAME *w/ SAFETY DECALS*	1	-
2	522675702	BUMPER -	1	-
3	587898002	GUARD -	1	-
4	589808802	BRACKET -	2	-
5	589807202	BRACKET -	1	-
6	589448202	BRACKET -	1	-
7	589448204	BRACKET -	1	-
8	582481101	BRACKET -	2	-

Ref.	Article N.	Description	Qty	Kit
9	582481002	PANEL *For 96767860300, 96767860200, 96767860101, 967678701-00, 967678601-00*	1	-
9	595327502	PANEL *For 967930101-00*	1	-
10	582481004	PANEL -	1	-
11	582480803	PANEL -	1	-
12	582480804	PANEL -	1	-
13	589304602	PLATE -	1	-
14	574228602	PLATE *For 96767860300, 96767860200, 96767860101, 967678701-00, 967678601-00*	1	-
14	596694102	PLATE *For 967930101-00*	1	-
15	582478701	BUMPER -	2	-
16	575811501	BUMPER -	2	-
17	522801401	BUMPER -	4	-
18	539102587	ABSORBER -	2	-
19	589745202	COVER -	1	-
20	582480502	CROSS MEMBER -	1	-
21	589744001	ISOLATOR -	2	-
22	539104411	KNOB -	1	-
23	591344501	KNOB -	2	-
24	591101701	PIN -	2	-
25	591101601	PIN -	2	-
26	582460702	PLATE -	1	-
27	582460606	BRACKET *MX-14*	1	-
28	589500701	BRACKET	1	-

Ref.	Article N.	Description	Qty	Kit
		-		
29	539104763	CLIP -	7	-
30	589806801	NUT -	2	-
31	539111028	NUTSERT 5/16-18 THICK GRIP -	2	-
32	525612801	SCREW -	4	-
33	574233801	SCREW -	2	-
34	525544001	BOLT -	2	-
35	539113226	BOLT -	4	-
36	577117701	SCREW -	4	-
37	539100145	BOLT -	2	-
38	872140404	BOLT -	4	-
39	872140406	BOLT *For 96767860300, 96767860200, 96767860101, 967678701-00, 967678601-00*	2	-
39	539115620	1/4-20X3/4 CARR BLT *For 967930101-00*	2	-
40	539990316	BOLT -	14	-
41	539990208	SCREW -	2	-
42	539110303	BOLT -	4	-
43	580754601	BOLT -	6	-
44	589797201	SCREW -	2	-
45	817490408	SCREW -	2	-
46	585986101	BOLT -	2	-
47	525829101	NUT -	6	-
48	539976978	NUT -	6	-

Ref.	Article N.	Description	Qty	Kit
49	521996501	NUT -	12	-
50	539112899	NUT, 5/16-18, NYLOC -	21	-
51	539102653	WASHER -	4	-
52	539108120	NUT *For 967930101-00*	1	-
53	583611601	BOLT *For 967930101-00*	1	-
54	591176601	BOLT *For 967930101-00*	1	-
58	590877803	ROPS *ROPS ASSY*	1	-

STEERING

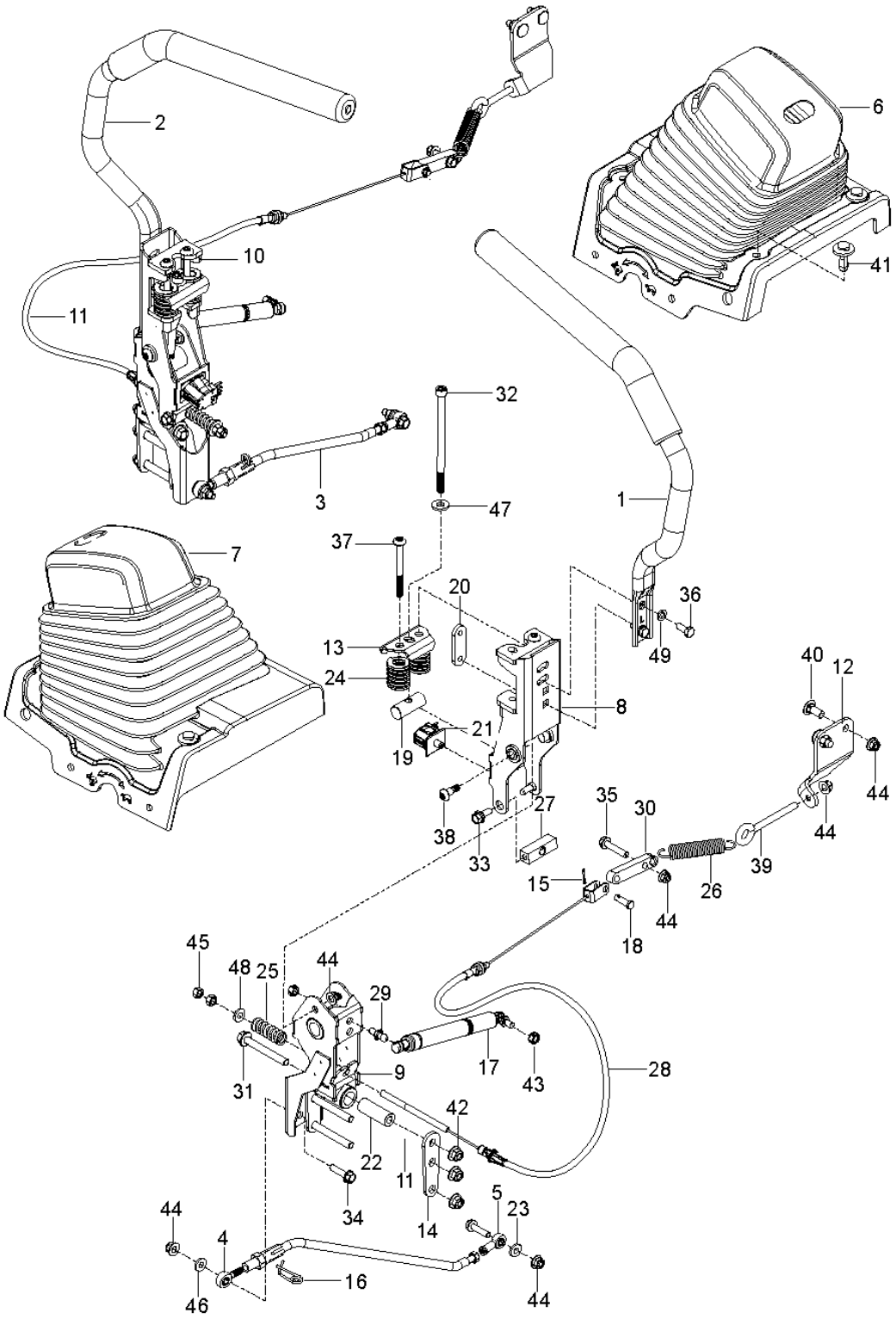

Ref.	Article N.	Description	Qty	Kit
1	582483902	PANEL	1	-
2	582483602	PANEL	1	-
3	586161801	HOUR METER	1	-
4	574455401	SWITCH	1	-
5	589887201	SWITCH	1	-

Ref.	Article N.	Description	Qty	Kit
6	574455501	KEY	1	-
7	581878301	LIGHT *For 967930101-00, 967678701-00*	1	-
7	574206901	CABLE *CHOKE/ For 96767860300, 96767860200, 96767860101*	1	-
8	582120301	THROTTLE CONTROL *46*	1	-
9	589819501	BATTERY *MX-9/ For 967930101-00, 967678701-00, 967678601-00*	1	-
9	589819502	BATTERY *MX-12/ For 967930101-00, 967678701-00, 967678601-00*	1	-
9	589819503	BATTERY *MX-14/ For 96767860300, 96767860200, 96767860101*	1	-
9	582460606	BRACKET *MX-14*	1	-
9	596990201	SERVICE KIT *MX-12 Bracket (Battery not included) For 967930101-00, 967678701-00, 967678601-00*	1	-
10	539103178	NUT CAP	1	-
11	539132624	KNOB	1	-
12	539102759	INSULATOR	2	-
13	592872701	FUEL GAUGE	2	-
14	539114341	SCREW	6	-
15	532199855	SCREW	2	-
16	582460801	SCREW	2	-
21	593777801	HARNESS *FOR CARB ENGINES*	1	-
21	593777803	HARNESS *FOR KOHLER & YAMAHA EFI*	1	-
22	589838501	HARNESS	1	-
23	574514001	TIMER *NOT SHOWN*	1	-
24	590632101	CABLE *NOT SHOWN*	1	-
25	539101714	SOLENOID *NOT SHOWN (SOLENOID KAW FX)*	1	-
1	574437301	DECAL *BELT ROUTING*	1	-
2	590209401	DECAL *MOTION/BRAKE RIGHT*	1	-
3	590209501	DECAL *MOTION_BRAKE_LEFT*	1	-

Ref.	Article N.	Description	Qty	Kit
3	590807601	DECAL *Z554X*	1	-
4	581724301	DECAL *NO STEP*	2	-
5	539105745	DECAL *BATTERY WARNING*	1	-
6	539105744	DECAL *DANGER BELT*	2	-
7	581724401	DECAL *DEFLECTOR WARNING*	1	-
8	532424102	DECAL *SPARK ARRESTOR*	1	-
9	574455001	DECAL *CROWN LARGE*	1	-
10	574569006	DECAL *ROPS/ For 96767860300, 96767860200,*	1	-
10	593011101	DECAL *ROPS/ For 967930101-00, 967678701-00, 967678601-00*	1	-
11	574569002	DECAL *ROPS WARNING*	1	-
12	574569401	DECAL *FUSE*	1	-
13	584904601	DECAL *DECK/DEFLECT WARNING*	1	-
14	532428676	DECAL *CROWN SMALL*	1	-
15	590799301	DECAL *DECK HEIGHT*	1	-
16	590210001	DECAL *COMMERCIAL*	1	-
17	590846801	DECAL *MAINTANCE/SERVICE*	1	-
18	590210301	DECAL *CONTROL PANEL RIGHT - CHOKE /For 96767860300, 96767860200, 96767860101*	1	-
18	590210302	DECAL *CONTROL PANEL RIGHT-EFI/ For 967930101-00, 967678701-00, 967678601-00*	1	-
19	590210501	DECAL *CONTROL PANEL LEFT*	1	-
20	590209701	DECAL *TRANSMISSION WARNING*	1	-
21	590209202	DECAL	1	-

Ref.	Article N.	Description	Qty	Kit
		START W/ CHOKE		
22	577469001	DECAL *EMBLEM*	2	-
30	577150101	DECAL *FUEL - NOT SHOWN*	1	-
31	590807801	DECAL *Z560X / For 967678601-00, 967678701-00*	1	-
32	590807901	DECAL *Z572X / For 967678601-00, 967678701-00*	1	-
1	582733302	PLATE -	1	-
2	525749501	CLUTCH -	1	-
3	522676702	STOP -	1	-
4	539118911	NIPPLE -	1	-
5	522837001	PLUG -	1	-
6	510019801	PULLEY -	1	-
7	539119680	ADAPTER -	1	-
8	539105072	90DEG.ELBOW 3/8NPT -	1	-
9	525749901	KEY -	1	-
10	587886001	MUFFLER -	1	-
11	539109618	O-RING -	1	-
12	505280001	TIE WRAP -	1	-
13	581332801	BOLT -	1	-
14	574233801	SCREW -	4	-
15	539990563	SCREW -	4	-
16	874780716	BOLT -	1	-
17	539990208	SCREW -	2	-

Ref.	Article N.	Description	Qty	Kit
18	539102933	SCREW -	2	-
19	539108120	NUT -	1	-
20	539112899	NUT, 5/16-18, NYLOC -	8	-
21	539102582	NUT -	1	-
22	539102593	WASHER -	4	-
23	539990247	WASHER -	1	-
24	539125626	WASHER -	1	-
25	586839701	GASKET *NOT SHOWN*	2	-
1	582483105	FUEL TANK ASSY *For 96767860300, 96767860200, 96767860101, 967678701-00, 967678601-00*	1	-
1	590680505	TANK UNIT ASSY *For 967930101-00*	1	-
2	582481705	FUEL TANK ASSY *For 96767860300, 96767860200, 96767860101, 967678701-00, 967678601-00*	1	-
2	590680405	TANK UNIT ASSY *For 967930101-00*	1	-
3	587044550	HOSE -	1	-
4	587044526	HOSE -	1	-
5	587044517	HOSE -	1	-
6	587044846	HOSE -	1	-
7	587044808	HOSE *For 967930101-00*	1	-
7	587044833	HOSE *For 96767860300, 96767860200, 96767860101, 967678701-00, 967678601-00*	1	-
8	587044824	HOSE -	1	-
9	574206602	FITTING -	1	-
10	575018101	CAP -	2	-
11	582483301	GUARD	1	-

Ref.	Article N.	Description	Qty	Kit
		-		
12	590638801	SENSOR -	2	-
13	576618101	TANK VENT -	2	-
14	539102679	VALVE -	1	-
15	582482301	GUARD -	1	-
15	525865402	TUBE ASSY -	1	-
16	532003645	BUSHING -	2	-
17	590209101	GROMMET -	2	-
18	584648201	GROMMET -	2	-
19	582481502	BRACKET -	2	-
20	582481602	BRACKET -	2	-
20	525865403	TUBE ASSY -	1	-
21	582483401	COVER -	1	-
22	539912222	CLAMP -	6	-
23	575436501	CLAMP -	6	-
24	582482601	CLIP -	8	-
25	505280001	TIE WRAP -	5	-
26	874490548	BOLT -	6	-
27	582482401	COVER -	1	-
27	590257301	SCREW -	6	-
28	817490516	SCREW -	6	-
29	582484201	SCREW -	8	-

Ref.	Article N.	Description	Qty	Kit
30	539112899	NUT, 5/16-18, NYLOC -	20	-
31	532126684	SHIM -	6	-
1	591359901	SHIELD -	1	-
2	582461206	BRACKET -	1	-
3	539102587	ABSORBER -	4	-
4	582461701	HOLDER ASSY -	3	-
5	582461303	ROD -	2	-
6	874780412	BOLT -	3	-
7	874490548	BOLT -	4	-
8	503200001	SCREW EHHFM -	3	-
9	587592101	SCREW -	4	-
10	521991101	NUT -	2	-
11	539112899	NUT, 5/16-18, NYLOC -	8	-
12	532191730	NUT -	3	-
13	731231405	HEXAGON NUT -	3	-
14	873350800	NUT -	2	-
1	582463102	ARM -	1	-
2	501603701	BEARING -	2	-
3	582479102	BRACKET -	4	-
4	582480101	CLAMP -	4	-
5	529311401	FITTING -	2	-
6	582479404	FRAME	1	-

Ref.	Article N.	Description	Qty	Kit
		-		
7	582480204	HOSE -	2	-
8	586933802	MOUNT -	1	-
9	582468101	SHAFT -	1	-
10	587654101	PULLEY -	2	-
11	582716201	ROD END -	1	-
12	582468401	SPRING -	1	-
13	574499201	TANK -	2	-
14	582480001	TRANSMISSION -	1	-
15	582480002	TRANSMISSION -	1	-
16	576127201	FILTER -	1	-
17	582480402	V-BELT -	1	-
18	874490652	SCREW -	1	-
19	574210601	SCREW -	8	-
20	525828901	BOLT *For 96767860300, 96767860200, 96767860101*	8	-
20	874490848	SCREW *For 967930101-00, 967678701-00, 967678601-00*	8	-
21	539100145	BOLT -	2	-
22	539990645	BOLT -	2	-
23	532165857	SCREW -	4	-
24	539913847	BOLT -	1	-
25	521991101	NUT -	8	-
26	521996501	NUT -	6	-

Ref.	Article N.	Description	Qty	Kit
27	819133210	WASHER -	1	-
1	591359704	CUTTING DECK -	1	-
2	588264805	DRIVE BELT -	1	-
3	575265901	BLADE -	3	-
4	582462702	ARM -	1	-
5	521979701	PULLEY -	3	-
6	510015101	PULLEY -	3	-
7	582463003	PULLEY -	1	-
8	582463006	PULLEY -	1	-
9	582468801	CHUTE -	1	-
10	510254501	SHIELD -	3	-
11	574169601	ROLLER -	4	-
12	574196401	TUBE -	2	-
13	574196501	TUBE -	1	-
14	539131518	BEARING -	2	-
15	510263701	BEARING -	2	-
16	582467302	BRACKET -	1	-
17	582463203	BRACKET *For 96767860300, 96767860200, 96767860101, 967678701-00, 967678601-00*	1	-
17	582463207	BRACKET *For 967930101-00*	1	-
18	582463204	BRACKET *For 96767860300, 96767860200, 96767860101, 967678701-00, 967678601-00*	1	-
18	582463208	BRACKET *For 967930101-00*	1	-
19	582472502	BELT GUARD	1	-

Ref.	Article N.	Description	Qty	Kit
		For 96767860300, 96767860200, 96767860101, 967678701-00, 967678601-00		
19	594913302	BELT GUIDE *For 967930101-00*	1	-
20	582470201	KEEPER -	1	-
21	539104411	KNOB -	2	-
22	590523702	PLATE -	1	-
23	582466401	PLATE -	1	-
24	582468101	SHAFT -	1	-
25	582468301	SPACER -	1	-
26	589455201	SPACER -	1	-
27	582468001	SPRING -	1	-
28	510437502	BAFFLE -	1	-
29	539104763	CLIP -	2	-
30	539115620	1/4-20X3/4 CARR BLT -	4	-
31	872140610	BOLT -	3	-
32	510022301	SCREW -	2	-
33	872140628	BOLT -	2	-
34	872140864	BOLT -	1	-
35	874490644	BOLT -	2	-
36	574210601	SCREW -	18	-
37	525612801	SCREW -	2	-
38	521996601	SCREW -	1	-
39	582476401	SCREW -	4	-

Ref.	Article N.	Description	Qty	Kit
40	539130315	BOLT -	9	-
41	539119007	SCREW -	3	-
42	574202001	BOLT -	1	-
43	539913847	BOLT -	1	-
44	521996501	NUT -	10	-
45	539112899	NUT, 5/16-18, NYLOC -	4	-
46	521991101	NUT -	3	-
47	539109332	NUT -	1	-
48	539976978	NUT -	4	-
49	539106504	WASHER -	2	-
50	539109600	WASHER -	9	-
1	582462602	SHAFT -	1	-
2	592654001	ARM -	1	-
2	592654002	ARM -	1	-
3	582465402	ARM -	2	-
4	582463902	ARM -	2	-
5	582462001	ARM -	1	-
6	582462002	ARM -	1	-
7	582464601	ROD -	2	-
8	582472801	ROD -	1	-
9	582471401	ROD -	1	-
10	510408301	PEDAL	1	-

Ref.	Article N.	Description	Qty	Kit
		-		
11	510089501	PAD -	1	-
12	510023902	BLOCK -	4	-
13	582467201	BLOCK -	1	-
14	582466902	BRACKET -	1	-
15	582468902	BRACKET -	2	-
16	589454103	LEVER -	1	-
17	592654101	LEVER -	1	-
18	539109693	LIFT CHAIN - 3 LINK -	2	-
18	589454104	LEVER -	1	-
19	539102641	CHAIN -	2	-
20	582464801	PIVOT -	2	-
21	582763902	PLATE -	1	-
22	589453201	LEVER ASSY -	1	-
23	582469001	SHACKLE -	2	-
24	582464201	SHAFT -	2	-
25	593091801	SPRING -	2	-
26	582471301	SPRING -	1	-
27	582467001	SWIVEL -	1	-
28	582467101	SWIVEL -	1	-
29	582469901	BUSHING -	2	-
30	582469801	BUSHING -	2	-

Ref.	Article N.	Description	Qty	Kit
31	510089201	BUSHING -	5	-
32	539912730	RING -	1	-
33	539990870	RING -	2	-
34	590465501	PIN -	1	-
35	539102889	SPLIT PIN -	2	-
36	582466701	SCREW -	4	-
37	582472601	SCREW -	2	-
38	574202001	BOLT -	2	-
39	539990580	SCREW -	1	-
40	589786001	SCREW -	4	-
41	501064102	SCREW -	3	-
42	501064101	SCREW -	4	-
43	510408201	BOLT -	1	-
44	539101175	SCREW -	4	-
45	582465601	SCREW -	2	-
46	589677701	NUT -	3	-
47	539976978	NUT -	1	-
48	539990546	NUT -	2	-
49	539119124	NUT -	4	-
50	539110340	NUT -	3	-
51	521996501	NUT -	6	-
52	539112899	NUT, 5/16-18, NYLOC	2	-

Ref.	Article N.	Description	Qty	Kit
		-		
53	539132019	NUT -	4	-
54	582466601	NUT -	4	-
55	539108732	NUT 3/8-24 HEX JAM ZD -	2	-
56	539991043	BUSHING -	2	-
1	579866104	SEAT ASSY -	1	-
1	582460103	SEAT *Fits 97058500100*	1	-
2	582478801	BAR -	1	-
3	582478201	BRACKET -	2	-
4	590555002	BRACKET -	1	-
5	590481801	ISOLATOR -	8	-
6	539116377	INSERT -	4	-
7	590373501	LATCH -	1	-
8	590506802	PLATE -	1	-
9	590507201	ROD -	1	-
10	539113952	SPRING -	2	-
11	582478101	NUT -	4	-
12	532192749	SWITCH -	1	-
13	539108392	HCS 5/16-18 X 5/8 GR 5 ZD -	4	-
14	582478901	SCREW -	2	-
15	582478501	SCREW -	2	-
16	539990316	BOLT -	8	-

Ref.	Article N.	Description	Qty	Kit
17	582478601	NUT -	2	-
18	539913847	BOLT -	1	-
19	539112899	NUT, 5/16-18, NYLOC -	6	-
20	522023401	WASHER -	2	-
21	532413524	WASHER -	8	-
22	539990118	WASHER -	2	-
23	539990187	WASHER -	4	-
24	579866109	SEAT ASSY *Knob*	1	-
25	579866108	SEAT ASSY *REPLACEMENT PAD ONLY*	2	-
1	580942201	HUB -	3	-
2	580942101	SHAFT -	3	-
3	580942701	V-RING -	6	-
4	580942601	SEAL -	6	-
5	583911101	BEARING KIT *ALSO ORDER TOOL KIT*	3	-
6	580942301	SPACER -	3	-
7	580942501	CARRIER -	3	-
8	539976998	NIPPLE -	3	-
9	539977326	FITTING -	3	-
10	539130653	NUT -	3	-
11	580943306	SPINDLE -	3	-
12	580942801	SHIM *For 967678601-00, 967678701-00*	1	-
13	574754201	KIT	1	-

Ref.	Article N.	Description	Qty	Kit
		NOT SHOWN		
1	582475501	LEVER *LEFT*	1	-
2	582475502	LEVER *RIGHT*	1	-
3	596925601	ROD *RIGHT SIDE ASSY*	1	-
3	596925701	ROD *LEFT SIDE ASSY*	1	-
3	598852501	SERVICE KIT *COUPLER KIT. CONTAINS (2) COUPLERS THAT FITS BOTH LH/RH SIDES. REF # 4 SCREWS INTO THIS COUPLER*	1	-
4	588692502	ROD *ROD.END.MALE.LH THREAD*	2	-
5	579764601	JOINT *JOINT.RH.THREAD.FEMALE.5/16*	2	-
6	539923515	SPACER	2	-
7	597744702	BRACKET	2	-
8	592653801	CARRIER *w/BEARINGS LEFT*	1	-
8	592653802	CARRIER *w/BEARINGS RIGHT*	1	-
9	592653901	CARRIER	2	-
12	582477802	BRACKET *LEFT*	1	-
12	582477804	BRACKET *RIGHT*	1	-
13	582476902	BRACKET	2	-
14	582475102	BRACKET	4	-
15	587225301	PIN	2	-
16	582551901	CLIP	2	-
17	588775401	DAMPER	2	-
18	582477401	PIN	2	-
19	589505102	PIVOT	2	-
20	589489601	RETAINER	2	-
21	589500902	SWITCH	2	-
22	582475001	SPACER	2	-
23	582711303	SPACER	2	-
24	582477001	SPRING	4	-
25	532151332	SPRING	2	-
26	582477702	SPRING	2	-

Ref.	Article N.	Description	Qty	Kit
27	597744501	ADAPTER	2	-
28	582477501	CABLE	2	-
29	539110607	STUD	4	-
30	582477602	BRACKET	2	-
31	582476801	BEARING	4	-
32	539131518	BEARING	8	-
33	532170165	BOLT	4	-
34	525544001	BOLT	4	-
35	525465402	SCREW	2	-
36	539976934	SCREW	4	-
37	582477102	SCREW	4	-
38	582476401	SCREW	4	-
39	596240801	BOLT	2	-
40	595901501	BOLT	4	-
41	577117701	SCREW	2	-
42	589505602	SCREW	2	-
44	594944401	NUT	14	-
45	596040901	HEXAGON NUT	4	-
46	521996502	NUT	6	-
47	539990184	NUT	4	-
48	596134901	WASHER	2	-
49	539990187	WASHER	4	-
50	596204101	WASHER	2	-
51	522023401	WASHER	4	-
1	582475501	LEVER -	1	-
2	582475502	LEVER -	1	-
3	501567001	ROD *For 967930101-00*	1	-
3	592653701	CONTROL *LEFT For 96767860300, 96767860200, 96767860101, 967678701. 967678601*	1	-
3	592653702	CONTROL *RIGHT*	1	-
4	588692502	ROD -	2	-
5	579764601	JOINT -	2	-
6	582484001	BELLOWS *For 967930101-00*	1	-

Ref.	Article N.	Description	Qty	Kit
6	591193301	SERVICE KIT *For 96767860300, 96767860200, 96767860101, 967678701-00, 967678601-00*	1	-
7	582484101	BELLOWS *For 967930101-00*	1	-
7	591193302	SERVICE KIT *For 96767860300, 96767860200, 96767860101, 967678701-00, 967678601-00*	1	-
8	592653801	CARRIER *w/BEARINGS LEFT/ For 96767860300, 96767860200, 96767860101, 967678701-00, 967678601-00*	1	-
8	592653802	CARRIER *w/BEARINGS LEFT/ For 967930101-00*	1	-
9	592653901	CARRIER -	2	-
10	592724002	CONTROL -	1	-
10	592724001	CONTROL -	1	-
11	592653501	PARKING BRAKE -	1	-
12	582477802	BRACKET *LEFT*	1	-
12	582477804	BRACKET *RIGHT*	1	-
13	582476901	BRACKET -	2	-
14	582475102	BRACKET -	4	-
15	587225301	PIN -	2	-
16	582551901	CLIP -	2	-
17	588775401	DAMPER -	2	-
18	582477401	PIN -	2	-
19	589505101	PIVOT -	2	-
20	589489601	RETAINER -	2	-
21	589500901	SWITCH -	2	-
22	582475001	SPACER -	2	-

Ref.	Article N.	Description	Qty	Kit
23	582711303	SPACER -	2	-
24	582477001	SPRING -	4	-
25	532151332	SPRING -	2	-
26	582477701	SPRING -	2	-
27	582477201	YOKE -	2	-
28	582477501	CABLE -	2	-
29	539110607	STUD -	4	-
30	582477601	BRACKET -	2	-
31	582476801	BEARING -	4	-
32	539131518	BEARING -	8	-
33	539110303	BOLT -	4	-
34	525544001	BOLT -	4	-
35	525465401	SCREW -	2	-
36	539976934	SCREW -	4	-
37	582477101	SCREW -	4	-
38	582476401	SCREW -	2	-
39	539115574	EYE BOLT -	2	-
40	539990208	SCREW -	4	-
41	577117701	SCREW -	6	-
42	589505601	SCREW -	2	-
43	582482901	RIVET -	12	-
44	539112899	NUT, 5/16-18, NYLOC	14	-

Ref.	Article N.	Description	Qty	Kit
		-		
45	539990223	NUT -	4	-
46	521996501	NUT -	6	-
47	539990184	NUT -	4	-
48	539990692	WASHER -	2	-
49	539990187	WASHER -	4	-
50	819111116	WASHER -	2	-
51	522023401	WASHER -	2	-
1	599893003	COVER -	1	-
2	599893004	COVER -	1	-
3	596564002	BOLT -	4	-
1	599156701	TIRE *fits 967669801-00, 967699802-00*	2	-
1	510154601	TIRE *Use From SN: 060117F000001 To SN: 090820F999999*	2	-
2	539105152	TIRE *24x12-12 Tire Only*	2	-
2	510154502	WHEEL RIM *Rim Only*	2	-
2	510154501	TIRE *Tire & Rim Assembly*	2	-
3	525611902	FORK -	2	-
4	510034001	CAP -	2	-
5	510034301	SEAL -	2	-
6	510034403	BEARING -	4	-
7	596623501	VALVE -	2	-
8	590690701	SPACER *Use From SN: 060117F000001 To SN: 090820F999999*	4	-

Ref.	Article N.	Description	Qty	Kit
9	590704902	SPACER *Use From SN: 060117F000001 To SN: 090820F999999*	2	-
10	594946501	BOLT -	2	-
11	522842602	NUT -	2	-
12	587653902	NUT -	8	-
13	873930800	NUT *For 967678802-01, 967678801-01*	2	-
13	521991102	NUT *For 96793040300, 967669703-01*	2	-
14	595086801	WASHER -	2	-
15	574824701	WASHER -	2	-
16	539102484	BEARING *Use after SN: 090920F000001*	4	-
17	539105307	ROLLER BEARING *Use after SN: 090920F000001*	4	-
18	539912234	VALVE *Use after SN: 090920F000001*	2	-
19	599405101	SHIM *Use after SN: 090920F000001*	2	-
20	539133007	WASHER *Use after SN: 090920F000001*	2	-
21	539105522	TIRE *13X6.5-6 Tire Only Use After SN: 090920F000001*	2	-
21	581199501	WHEEL ASSY *Use after SN: 090920F000001*	2	-
22	575334901	SPACER *Use after SN: 090920F000001*	2	-
23	596623501	VALVE -	2	-
24	597383801	SERVICE KIT *Use From SN: 060117F000001 To SN: 090820F999999*	2	-
1	597383801	SERVICE KIT -	1	-
1	510154601	TIRE -	2	-
2	522905101	TIRE -	2	-
3	525611902	FORK	2	-

Ref.	Article N.	Description	Qty	Kit
		-		
4	510034001	CAP -	2	-
4	522905102	TIRE -	2	-
5	510034301	SEAL -	2	-
6	510034403	BEARING -	4	-
7	539101474	NIPPLE -	2	-
8	590690701	SPACER -	4	-
9	590704901	SPACER -	2	-
10	539105517	BOLT -	2	-
11	522842601	NUT -	2	-
12	587653902	NUT -	8	-
13	873930800	NUT -	2	-
14	539990250	WASHER -	2	-
15	574824701	WASHER -	2	-
1	591359801	FRAME *w/ SAFETY DECALS*	1	-
2	522675702	BUMPER -	1	-
3	587898002	GUARD -	1	-
4	589808802	BRACKET -	2	-
5	589807202	BRACKET -	1	-
6	589448202	BRACKET -	1	-
7	589448204	BRACKET -	1	-
8	582481101	BRACKET -	2	-

Ref.	Article N.	Description	Qty	Kit
9	582481002	PANEL *For 96767860300, 96767860200, 96767860101, 967678701-00, 967678601-00*	1	-
9	595327502	PANEL *For 967930101-00*	1	-
10	582481004	PANEL -	1	-
11	582480803	PANEL -	1	-
12	582480804	PANEL -	1	-
13	589304602	PLATE -	1	-
14	574228602	PLATE *For 96767860300, 96767860200, 96767860101, 967678701-00, 967678601-00*	1	-
14	596694102	PLATE *For 967930101-00*	1	-
15	582478701	BUMPER -	2	-
16	575811501	BUMPER -	2	-
17	522801401	BUMPER -	4	-
18	539102587	ABSORBER -	2	-
19	589745202	COVER -	1	-
20	582480502	CROSS MEMBER -	1	-
21	589744001	ISOLATOR -	2	-
22	539104411	KNOB -	1	-
23	591344501	KNOB -	2	-
24	591101701	PIN -	2	-
25	591101601	PIN -	2	-
26	582460702	PLATE -	1	-
27	582460606	BRACKET *MX-14*	1	-
28	589500701	BRACKET	1	-

Ref.	Article N.	Description	Qty	Kit
		-		
29	539104763	CLIP -	7	-
30	589806801	NUT -	2	-
31	539111028	NUTSERT 5/16-18 THICK GRIP -	2	-
32	525612801	SCREW -	4	-
33	574233801	SCREW -	2	-
34	525544001	BOLT -	2	-
35	539113226	BOLT -	4	-
36	577117701	SCREW -	4	-
37	539100145	BOLT -	2	-
38	872140404	BOLT -	4	-
39	872140406	BOLT *For 96767860300, 96767860200, 96767860101, 967678701-00, 967678601-00*	2	-
39	539115620	1/4-20X3/4 CARR BLT *For 967930101-00*	2	-
40	539990316	BOLT -	14	-
41	539990208	SCREW -	2	-
42	539110303	BOLT -	4	-
43	580754601	BOLT -	6	-
44	589797201	SCREW -	2	-
45	817490408	SCREW -	2	-
46	585986101	BOLT -	2	-
47	525829101	NUT -	6	-
48	539976978	NUT -	6	-

Ref.	Article N.	Description	Qty	Kit
49	521996501	NUT -	12	-
50	539112899	NUT, 5/16-18, NYLOC -	21	-
51	539102653	WASHER -	4	-
52	539108120	NUT *For 967930101-00*	1	-
53	583611601	BOLT *For 967930101-00*	1	-
54	591176601	BOLT *For 967930101-00*	1	-
58	590877803	ROPS *ROPS ASSY*	1	-

STEERING

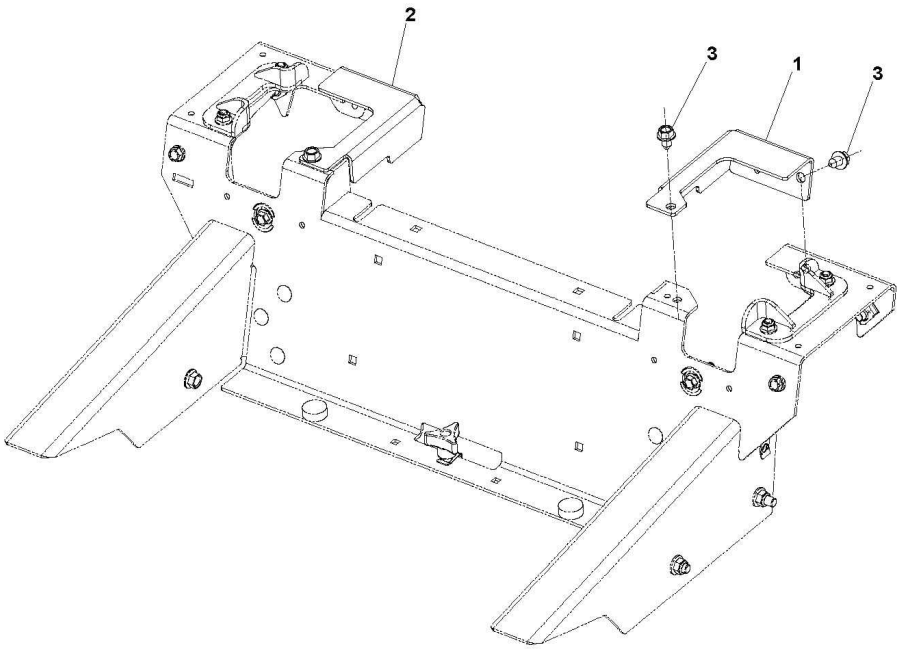

Ref.	Article N.	Description	Qty	Kit
1	582483902	PANEL	1	-
2	582483602	PANEL	1	-
3	586161801	HOUR METER	1	-
4	574455401	SWITCH	1	-
5	589887201	SWITCH	1	-

Ref.	Article N.	Description	Qty	Kit
6	574455501	KEY	1	-
7	581878301	LIGHT *For 967930101-00, 967678701-00*	1	-
7	574206901	CABLE *CHOKE/ For 96767860300, 96767860200, 96767860101*	1	-
8	582120301	THROTTLE CONTROL *46*	1	-
9	589819501	BATTERY *MX-9/ For 967930101-00, 967678701-00, 967678601-00*	1	-
9	589819502	BATTERY *MX-12/ For 967930101-00, 967678701-00, 967678601-00*	1	-
9	589819503	BATTERY *MX-14/ For 96767860300, 96767860200, 96767860101*	1	-
9	582460606	BRACKET *MX-14*	1	-
9	596990201	SERVICE KIT *MX-12 Bracket (Battery not included) For 967930101-00, 967678701-00, 967678601-00*	1	-
10	539103178	NUT CAP	1	-
11	539132624	KNOB	1	-
12	539102759	INSULATOR	2	-
13	592872701	FUEL GAUGE	2	-
14	539114341	SCREW	6	-
15	532199855	SCREW	2	-
16	582460801	SCREW	2	-
21	593777801	HARNESS *FOR CARB ENGINES*	1	-
21	593777803	HARNESS *FOR KOHLER & YAMAHA EFI*	1	-
22	589838501	HARNESS	1	-
23	574514001	TIMER *NOT SHOWN*	1	-
24	590632101	CABLE *NOT SHOWN*	1	-
25	539101714	SOLENOID *NOT SHOWN (SOLENOID KAW FX)*	1	-
1	574437301	DECAL *BELT ROUTING*	1	-
2	590209401	DECAL *MOTION/BRAKE RIGHT*	1	-
3	590209501	DECAL *MOTION_BRAKE_LEFT*	1	-

Ref.	Article N.	Description	Qty	Kit
3	590807601	DECAL *Z554X*	1	-
4	581724301	DECAL *NO STEP*	2	-
5	539105745	DECAL *BATTERY WARNING*	1	-
6	539105744	DECAL *DANGER BELT*	2	-
7	581724401	DECAL *DEFLECTOR WARNING*	1	-
8	532424102	DECAL *SPARK ARRESTOR*	1	-
9	574455001	DECAL *CROWN LARGE*	1	-
10	574569006	DECAL *ROPS/ For 96767860300, 96767860200,*	1	-
10	593011101	DECAL *ROPS/ For 967930101-00, 967678701-00, 967678601-00*	1	-
11	574569002	DECAL *ROPS WARNING*	1	-
12	574569401	DECAL *FUSE*	1	-
13	584904601	DECAL *DECK/DEFLECT WARNING*	1	-
14	532428676	DECAL *CROWN SMALL*	1	-
15	590799301	DECAL *DECK HEIGHT*	1	-
16	590210001	DECAL *COMMERCIAL*	1	-
17	590846801	DECAL *MAINTANCE/SERVICE*	1	-
18	590210301	DECAL *CONTROL PANEL RIGHT - CHOKE /For 96767860300, 96767860200, 96767860101*	1	-
18	590210302	DECAL *CONTROL PANEL RIGHT-EFI/ For 967930101-00, 967678701-00, 967678601-00*	1	-
19	590210501	DECAL *CONTROL PANEL LEFT*	1	-
20	590209701	DECAL *TRANSMISSION WARNING*	1	-
21	590209202	DECAL	1	-

Ref.	Article N.	Description	Qty	Kit
		START W/ CHOKE		
22	577469001	DECAL *EMBLEM*	2	-
30	577150101	DECAL *FUEL - NOT SHOWN*	1	-
31	590807801	DECAL *Z560X / For 967678601-00, 967678701-00*	1	-
32	590807901	DECAL *Z572X / For 967678601-00, 967678701-00*	1	-
1	582733302	PLATE -	1	-
2	525749501	CLUTCH -	1	-
3	522676702	STOP -	1	-
4	539118911	NIPPLE -	1	-
5	522837001	PLUG -	1	-
6	510019801	PULLEY -	1	-
7	539119680	ADAPTER -	1	-
8	539105072	90DEG.ELBOW 3/8NPT -	1	-
9	525749901	KEY -	1	-
10	587886001	MUFFLER -	1	-
11	539109618	O-RING -	1	-
12	505280001	TIE WRAP -	1	-
13	581332801	BOLT -	1	-
14	574233801	SCREW -	4	-
15	539990563	SCREW -	4	-
16	874780716	BOLT -	1	-
17	539990208	SCREW -	2	-

Ref.	Article N.	Description	Qty	Kit
18	539102933	SCREW -	2	-
19	539108120	NUT -	1	-
20	539112899	NUT, 5/16-18, NYLOC -	8	-
21	539102582	NUT -	1	-
22	539102593	WASHER -	4	-
23	539990247	WASHER -	1	-
24	539125626	WASHER -	1	-
25	586839701	GASKET *NOT SHOWN*	2	-
1	582483105	FUEL TANK ASSY *For 96767860300, 96767860200, 96767860101, 967678701-00, 967678601-00*	1	-
1	590680505	TANK UNIT ASSY *For 967930101-00*	1	-
2	582481705	FUEL TANK ASSY *For 96767860300, 96767860200, 96767860101, 967678701-00, 967678601-00*	1	-
2	590680405	TANK UNIT ASSY *For 967930101-00*	1	-
3	587044550	HOSE -	1	-
4	587044526	HOSE -	1	-
5	587044517	HOSE -	1	-
6	587044846	HOSE -	1	-
7	587044808	HOSE *For 967930101-00*	1	-
7	587044833	HOSE *For 96767860300, 96767860200, 96767860101, 967678701-00, 967678601-00*	1	-
8	587044824	HOSE -	1	-
9	574206602	FITTING -	1	-
10	575018101	CAP -	2	-
11	582483301	GUARD	1	-

Ref.	Article N.	Description	Qty	Kit
		-		
12	590638801	SENSOR -	2	-
13	576618101	TANK VENT -	2	-
14	539102679	VALVE -	1	-
15	582482301	GUARD -	1	-
15	525865402	TUBE ASSY -	1	-
16	532003645	BUSHING -	2	-
17	590209101	GROMMET -	2	-
18	584648201	GROMMET -	2	-
19	582481502	BRACKET -	2	-
20	582481602	BRACKET -	2	-
20	525865403	TUBE ASSY -	1	-
21	582483401	COVER -	1	-
22	539912222	CLAMP -	6	-
23	575436501	CLAMP -	6	-
24	582482601	CLIP -	8	-
25	505280001	TIE WRAP -	5	-
26	874490548	BOLT -	6	-
27	582482401	COVER -	1	-
27	590257301	SCREW -	6	-
28	817490516	SCREW -	6	-
29	582484201	SCREW -	8	-

Ref.	Article N.	Description	Qty	Kit
30	539112899	NUT, 5/16-18, NYLOC -	20	-
31	532126684	SHIM -	6	-
1	591359901	SHIELD -	1	-
2	582461206	BRACKET -	1	-
3	539102587	ABSORBER -	4	-
4	582461701	HOLDER ASSY -	3	-
5	582461303	ROD -	2	-
6	874780412	BOLT -	3	-
7	874490548	BOLT -	4	-
8	503200001	SCREW EHHFM -	3	-
9	587592101	SCREW -	4	-
10	521991101	NUT -	2	-
11	539112899	NUT, 5/16-18, NYLOC -	8	-
12	532191730	NUT -	3	-
13	731231405	HEXAGON NUT -	3	-
14	873350800	NUT -	2	-
1	582463102	ARM -	1	-
2	501603701	BEARING -	2	-
3	582479102	BRACKET -	4	-
4	582480101	CLAMP -	4	-
5	529311401	FITTING -	2	-
6	582479404	FRAME	1	-

Ref.	Article N.	Description	Qty	Kit
		-		
7	582480204	HOSE -	2	-
8	586933802	MOUNT -	1	-
9	582468101	SHAFT -	1	-
10	587654101	PULLEY -	2	-
11	582716201	ROD END -	1	-
12	582468401	SPRING -	1	-
13	574499201	TANK -	2	-
14	582480001	TRANSMISSION -	1	-
15	582480002	TRANSMISSION -	1	-
16	576127201	FILTER -	1	-
17	582480402	V-BELT -	1	-
18	874490652	SCREW -	1	-
19	574210601	SCREW -	8	-
20	525828901	BOLT *For 96767860300, 96767860200, 96767860101*	8	-
20	874490848	SCREW *For 967930101-00, 967678701-00, 967678601-00*	8	-
21	539100145	BOLT -	2	-
22	539990645	BOLT -	2	-
23	532165857	SCREW -	4	-
24	539913847	BOLT -	1	-
25	521991101	NUT -	8	-
26	521996501	NUT -	6	-

Ref.	Article N.	Description	Qty	Kit
27	819133210	WASHER -	1	-
1	591359704	CUTTING DECK -	1	-
2	588264805	DRIVE BELT -	1	-
3	575265901	BLADE -	3	-
4	582462702	ARM -	1	-
5	521979701	PULLEY -	3	-
6	510015101	PULLEY -	3	-
7	582463003	PULLEY -	1	-
8	582463006	PULLEY -	1	-
9	582468801	CHUTE -	1	-
10	510254501	SHIELD -	3	-
11	574169601	ROLLER -	4	-
12	574196401	TUBE -	2	-
13	574196501	TUBE -	1	-
14	539131518	BEARING -	2	-
15	510263701	BEARING -	2	-
16	582467302	BRACKET -	1	-
17	582463203	BRACKET *For 96767860300, 96767860200, 96767860101, 967678701-00, 967678601-00*	1	-
17	582463207	BRACKET *For 967930101-00*	1	-
18	582463204	BRACKET *For 96767860300, 96767860200, 96767860101, 967678701-00, 967678601-00*	1	-
18	582463208	BRACKET *For 967930101-00*	1	-
19	582472502	BELT GUARD	1	-

Ref.	Article N.	Description	Qty	Kit
		For 96767860300, 96767860200, 96767860101, 967678701-00, 967678601-00		
19	594913302	BELT GUIDE *For 967930101-00*	1	-
20	582470201	KEEPER -	1	-
21	539104411	KNOB -	2	-
22	590523702	PLATE -	1	-
23	582466401	PLATE -	1	-
24	582468101	SHAFT -	1	-
25	582468301	SPACER -	1	-
26	589455201	SPACER -	1	-
27	582468001	SPRING -	1	-
28	510437502	BAFFLE -	1	-
29	539104763	CLIP -	2	-
30	539115620	1/4-20X3/4 CARR BLT -	4	-
31	872140610	BOLT -	3	-
32	510022301	SCREW -	2	-
33	872140628	BOLT -	2	-
34	872140864	BOLT -	1	-
35	874490644	BOLT -	2	-
36	574210601	SCREW -	18	-
37	525612801	SCREW -	2	-
38	521996601	SCREW -	1	-
39	582476401	SCREW -	4	-

Ref.	Article N.	Description	Qty	Kit
40	539130315	BOLT -	9	-
41	539119007	SCREW -	3	-
42	574202001	BOLT -	1	-
43	539913847	BOLT -	1	-
44	521996501	NUT -	10	-
45	539112899	NUT, 5/16-18, NYLOC -	4	-
46	521991101	NUT -	3	-
47	539109332	NUT -	1	-
48	539976978	NUT -	4	-
49	539106504	WASHER -	2	-
50	539109600	WASHER -	9	-
1	582462602	SHAFT -	1	-
2	592654001	ARM -	1	-
2	592654002	ARM -	1	-
3	582465402	ARM -	2	-
4	582463902	ARM -	2	-
5	582462001	ARM -	1	-
6	582462002	ARM -	1	-
7	582464601	ROD -	2	-
8	582472801	ROD -	1	-
9	582471401	ROD -	1	-
10	510408301	PEDAL	1	-

Ref.	Article N.	Description	Qty	Kit
		-		
11	510089501	PAD -	1	-
12	510023902	BLOCK -	4	-
13	582467201	BLOCK -	1	-
14	582466902	BRACKET -	1	-
15	582468902	BRACKET -	2	-
16	589454103	LEVER -	1	-
17	592654101	LEVER -	1	-
18	539109693	LIFT CHAIN - 3 LINK -	2	-
18	589454104	LEVER -	1	-
19	539102641	CHAIN -	2	-
20	582464801	PIVOT -	2	-
21	582763902	PLATE -	1	-
22	589453201	LEVER ASSY -	1	-
23	582469001	SHACKLE -	2	-
24	582464201	SHAFT -	2	-
25	593091801	SPRING -	2	-
26	582471301	SPRING -	1	-
27	582467001	SWIVEL -	1	-
28	582467101	SWIVEL -	1	-
29	582469901	BUSHING -	2	-
30	582469801	BUSHING -	2	-

Ref.	Article N.	Description	Qty	Kit
31	510089201	BUSHING -	5	-
32	539912730	RING -	1	-
33	539990870	RING -	2	-
34	590465501	PIN -	1	-
35	539102889	SPLIT PIN -	2	-
36	582466701	SCREW -	4	-
37	582472601	SCREW -	2	-
38	574202001	BOLT -	2	-
39	539990580	SCREW -	1	-
40	589786001	SCREW -	4	-
41	501064102	SCREW -	3	-
42	501064101	SCREW -	4	-
43	510408201	BOLT -	1	-
44	539101175	SCREW -	4	-
45	582465601	SCREW -	2	-
46	589677701	NUT -	3	-
47	539976978	NUT -	1	-
48	539990546	NUT -	2	-
49	539119124	NUT -	4	-
50	539110340	NUT -	3	-
51	521996501	NUT -	6	-
52	539112899	NUT, 5/16-18, NYLOC	2	-

Ref.	Article N.	Description	Qty	Kit
		-		
53	539132019	NUT -	4	-
54	582466601	NUT -	4	-
55	539108732	NUT 3/8-24 HEX JAM ZD -	2	-
56	539991043	BUSHING -	2	-
1	579866104	SEAT ASSY -	1	-
1	582460103	SEAT *Fits 97058500100*	1	-
2	582478801	BAR -	1	-
3	582478201	BRACKET -	2	-
4	590555002	BRACKET -	1	-
5	590481801	ISOLATOR -	8	-
6	539116377	INSERT -	4	-
7	590373501	LATCH -	1	-
8	590506802	PLATE -	1	-
9	590507201	ROD -	1	-
10	539113952	SPRING -	2	-
11	582478101	NUT -	4	-
12	532192749	SWITCH -	1	-
13	539108392	HCS 5/16-18 X 5/8 GR 5 ZD -	4	-
14	582478901	SCREW -	2	-
15	582478501	SCREW -	2	-
16	539990316	BOLT -	8	-

Ref.	Article N.	Description	Qty	Kit
17	582478601	NUT -	2	-
18	539913847	BOLT -	1	-
19	539112899	NUT, 5/16-18, NYLOC -	6	-
20	522023401	WASHER -	2	-
21	532413524	WASHER -	8	-
22	539990118	WASHER -	2	-
23	539990187	WASHER -	4	-
24	579866109	SEAT ASSY *Knob*	1	-
25	579866108	SEAT ASSY *REPLACEMENT PAD ONLY*	2	-
1	580942201	HUB -	3	-
2	580942101	SHAFT -	3	-
3	580942701	V-RING -	6	-
4	580942601	SEAL -	6	-
5	583911101	BEARING KIT *ALSO ORDER TOOL KIT*	3	-
6	580942301	SPACER -	3	-
7	580942501	CARRIER -	3	-
8	539976998	NIPPLE -	3	-
9	539977326	FITTING -	3	-
10	539130653	NUT -	3	-
11	580943306	SPINDLE -	3	-
12	580942801	SHIM *For 967678601-00, 967678701-00*	1	-
13	574754201	KIT	1	-

Ref.	Article N.	Description	Qty	Kit
		NOT SHOWN		
1	582475501	LEVER *LEFT*	1	-
2	582475502	LEVER *RIGHT*	1	-
3	596925601	ROD *RIGHT SIDE ASSY*	1	-
3	596925701	ROD *LEFT SIDE ASSY*	1	-
3	598852501	SERVICE KIT *COUPLER KIT. CONTAINS (2) COUPLERS THAT FITS BOTH LH/RH SIDES. REF # 4 SCREWS INTO THIS COUPLER*	1	-
4	588692502	ROD *ROD.END.MALE.LH THREAD*	2	-
5	579764601	JOINT *JOINT.RH.THREAD.FEMALE.5/16*	2	-
6	539923515	SPACER	2	-
7	597744702	BRACKET	2	-
8	592653801	CARRIER *w/BEARINGS LEFT*	1	-
8	592653802	CARRIER *w/BEARINGS RIGHT*	1	-
9	592653901	CARRIER	2	-
12	582477802	BRACKET *LEFT*	1	-
12	582477804	BRACKET *RIGHT*	1	-
13	582476902	BRACKET	2	-
14	582475102	BRACKET	4	-
15	587225301	PIN	2	-
16	582551901	CLIP	2	-
17	588775401	DAMPER	2	-
18	582477401	PIN	2	-
19	589505102	PIVOT	2	-
20	589489601	RETAINER	2	-
21	589500902	SWITCH	2	-
22	582475001	SPACER	2	-
23	582711303	SPACER	2	-
24	582477001	SPRING	4	-
25	532151332	SPRING	2	-
26	582477702	SPRING	2	-

Ref.	Article N.	Description	Qty	Kit
27	597744501	ADAPTER	2	-
28	582477501	CABLE	2	-
29	539110607	STUD	4	-
30	582477602	BRACKET	2	-
31	582476801	BEARING	4	-
32	539131518	BEARING	8	-
33	532170165	BOLT	4	-
34	525544001	BOLT	4	-
35	525465402	SCREW	2	-
36	539976934	SCREW	4	-
37	582477102	SCREW	4	-
38	582476401	SCREW	4	-
39	596240801	BOLT	2	-
40	595901501	BOLT	4	-
41	577117701	SCREW	2	-
42	589505602	SCREW	2	-
44	594944401	NUT	14	-
45	596040901	HEXAGON NUT	4	-
46	521996502	NUT	6	-
47	539990184	NUT	4	-
48	596134901	WASHER	2	-
49	539990187	WASHER	4	-
50	596204101	WASHER	2	-
51	522023401	WASHER	4	-
1	582475501	LEVER -	1	-
2	582475502	LEVER -	1	-
3	501567001	ROD *For 967930101-00*	1	-
3	592653701	CONTROL *LEFT For 96767860300, 96767860200, 96767860101, 967678701. 967678601*	1	-
3	592653702	CONTROL *RIGHT*	1	-
4	588692502	ROD -	2	-
5	579764601	JOINT -	2	-
6	582484001	BELLOWS *For 967930101-00*	1	-

Ref.	Article N.	Description	Qty	Kit
6	591193301	SERVICE KIT *For 96767860300, 96767860200, 96767860101, 967678701-00, 967678601-00*	1	-
7	582484101	BELLOWS *For 967930101-00*	1	-
7	591193302	SERVICE KIT *For 96767860300, 96767860200, 96767860101, 967678701-00, 967678601-00*	1	-
8	592653801	CARRIER *w/BEARINGS LEFT/ For 96767860300, 96767860200, 96767860101, 967678701-00, 967678601-00*	1	-
8	592653802	CARRIER *w/BEARINGS LEFT/ For 967930101-00*	1	-
9	592653901	CARRIER -	2	-
10	592724002	CONTROL -	1	-
10	592724001	CONTROL -	1	-
11	592653501	PARKING BRAKE -	1	-
12	582477802	BRACKET *LEFT*	1	-
12	582477804	BRACKET *RIGHT*	1	-
13	582476901	BRACKET -	2	-
14	582475102	BRACKET -	4	-
15	587225301	PIN -	2	-
16	582551901	CLIP -	2	-
17	588775401	DAMPER -	2	-
18	582477401	PIN -	2	-
19	589505101	PIVOT -	2	-
20	589489601	RETAINER -	2	-
21	589500901	SWITCH -	2	-
22	582475001	SPACER -	2	-

Ref.	Article N.	Description	Qty	Kit
23	582711303	SPACER -	2	-
24	582477001	SPRING -	4	-
25	532151332	SPRING -	2	-
26	582477701	SPRING -	2	-
27	582477201	YOKE -	2	-
28	582477501	CABLE -	2	-
29	539110607	STUD -	4	-
30	582477601	BRACKET -	2	-
31	582476801	BEARING -	4	-
32	539131518	BEARING -	8	-
33	539110303	BOLT -	4	-
34	525544001	BOLT -	4	-
35	525465401	SCREW -	2	-
36	539976934	SCREW -	4	-
37	582477101	SCREW -	4	-
38	582476401	SCREW -	2	-
39	539115574	EYE BOLT -	2	-
40	539990208	SCREW -	4	-
41	577117701	SCREW -	6	-
42	589505601	SCREW -	2	-
43	582482901	RIVET -	12	-
44	539112899	NUT, 5/16-18, NYLOC	14	-

Ref.	Article N.	Description	Qty	Kit
		-		
45	539990223	NUT -	4	-
46	521996501	NUT -	6	-
47	539990184	NUT -	4	-
48	539990692	WASHER -	2	-
49	539990187	WASHER -	4	-
50	819111116	WASHER -	2	-
51	522023401	WASHER -	2	-
1	599893003	COVER -	1	-
2	599893004	COVER -	1	-
3	596564002	BOLT -	4	-
1	599156701	TIRE *fits 967669801-00, 967699802-00*	2	-
1	510154601	TIRE *Use From SN: 060117F000001 To SN: 090820F999999*	2	-
2	539105152	TIRE *24x12-12 Tire Only*	2	-
2	510154502	WHEEL RIM *Rim Only*	2	-
2	510154501	TIRE *Tire & Rim Assembly*	2	-
3	525611902	FORK -	2	-
4	510034001	CAP -	2	-
5	510034301	SEAL -	2	-
6	510034403	BEARING -	4	-
7	596623501	VALVE -	2	-
8	590690701	SPACER *Use From SN: 060117F000001 To SN: 090820F999999*	4	-

Ref.	Article N.	Description	Qty	Kit
9	590704902	SPACER *Use From SN: 060117F000001 To SN: 090820F999999*	2	-
10	594946501	BOLT -	2	-
11	522842602	NUT -	2	-
12	587653902	NUT -	8	-
13	873930800	NUT *For 967678802-01, 967678801-01*	2	-
13	521991102	NUT *For 96793040300, 967669703-01*	2	-
14	595086801	WASHER -	2	-
15	574824701	WASHER -	2	-
16	539102484	BEARING *Use after SN: 090920F000001*	4	-
17	539105307	ROLLER BEARING *Use after SN: 090920F000001*	4	-
18	539912234	VALVE *Use after SN: 090920F000001*	2	-
19	599405101	SHIM *Use after SN: 090920F000001*	2	-
20	539133007	WASHER *Use after SN: 090920F000001*	2	-
21	539105522	TIRE *13X6.5-6 Tire Only Use After SN: 090920F000001*	2	-
21	581199501	WHEEL ASSY *Use after SN: 090920F000001*	2	-
22	575334901	SPACER *Use after SN: 090920F000001*	2	-
23	596623501	VALVE -	2	-
24	597383801	SERVICE KIT *Use From SN: 060117F000001 To SN: 090820F999999*	2	-
1	597383801	SERVICE KIT -	1	-
1	510154601	TIRE -	2	-
2	522905101	TIRE -	2	-
3	525611902	FORK	2	-

Ref.	Article N.	Description	Qty	Kit
		-		
4	510034001	CAP -	2	-
4	522905102	TIRE -	2	-
5	510034301	SEAL -	2	-
6	510034403	BEARING -	4	-
7	539101474	NIPPLE -	2	-
8	590690701	SPACER -	4	-
9	590704901	SPACER -	2	-
10	539105517	BOLT -	2	-
11	522842601	NUT -	2	-
12	587653902	NUT -	8	-
13	873930800	NUT -	2	-
14	539990250	WASHER -	2	-
15	574824701	WASHER -	2	-
1	591359801	FRAME *w/ SAFETY DECALS*	1	-
2	522675702	BUMPER -	1	-
3	587898002	GUARD -	1	-
4	589808802	BRACKET -	2	-
5	589807202	BRACKET -	1	-
6	589448202	BRACKET -	1	-
7	589448204	BRACKET -	1	-
8	582481101	BRACKET -	2	-

Ref.	Article N.	Description	Qty	Kit
9	582481002	PANEL *For 96767860300, 96767860200, 96767860101, 967678701-00, 967678601-00*	1	-
9	595327502	PANEL *For 967930101-00*	1	-
10	582481004	PANEL -	1	-
11	582480803	PANEL -	1	-
12	582480804	PANEL -	1	-
13	589304602	PLATE -	1	-
14	574228602	PLATE *For 96767860300, 96767860200, 96767860101, 967678701-00, 967678601-00*	1	-
14	596694102	PLATE *For 967930101-00*	1	-
15	582478701	BUMPER -	2	-
16	575811501	BUMPER -	2	-
17	522801401	BUMPER -	4	-
18	539102587	ABSORBER -	2	-
19	589745202	COVER -	1	-
20	582480502	CROSS MEMBER -	1	-
21	589744001	ISOLATOR -	2	-
22	539104411	KNOB -	1	-
23	591344501	KNOB -	2	-
24	591101701	PIN -	2	-
25	591101601	PIN -	2	-
26	582460702	PLATE -	1	-
27	582460606	BRACKET *MX-14*	1	-
28	589500701	BRACKET	1	-

Ref.	Article N.	Description	Qty	Kit
		-		
29	539104763	CLIP -	7	-
30	589806801	NUT -	2	-
31	539111028	NUTSERT 5/16-18 THICK GRIP -	2	-
32	525612801	SCREW -	4	-
33	574233801	SCREW -	2	-
34	525544001	BOLT -	2	-
35	539113226	BOLT -	4	-
36	577117701	SCREW -	4	-
37	539100145	BOLT -	2	-
38	872140404	BOLT -	4	-
39	872140406	BOLT *For 96767860300, 96767860200, 96767860101, 967678701-00, 967678601-00*	2	-
39	539115620	1/4-20X3/4 CARR BLT *For 967930101-00*	2	-
40	539990316	BOLT -	14	-
41	539990208	SCREW -	2	-
42	539110303	BOLT -	4	-
43	580754601	BOLT -	6	-
44	589797201	SCREW -	2	-
45	817490408	SCREW -	2	-
46	585986101	BOLT -	2	-
47	525829101	NUT -	6	-
48	539976978	NUT -	6	-

Ref.	Article N.	Description	Qty	Kit
49	521996501	NUT -	12	-
50	539112899	NUT, 5/16-18, NYLOC -	21	-
51	539102653	WASHER -	4	-
52	539108120	NUT *For 967930101-00*	1	-
53	583611601	BOLT *For 967930101-00*	1	-
54	591176601	BOLT *For 967930101-00*	1	-
58	590877803	ROPS *ROPS ASSY*	1	-

WHEELS AND TIRES

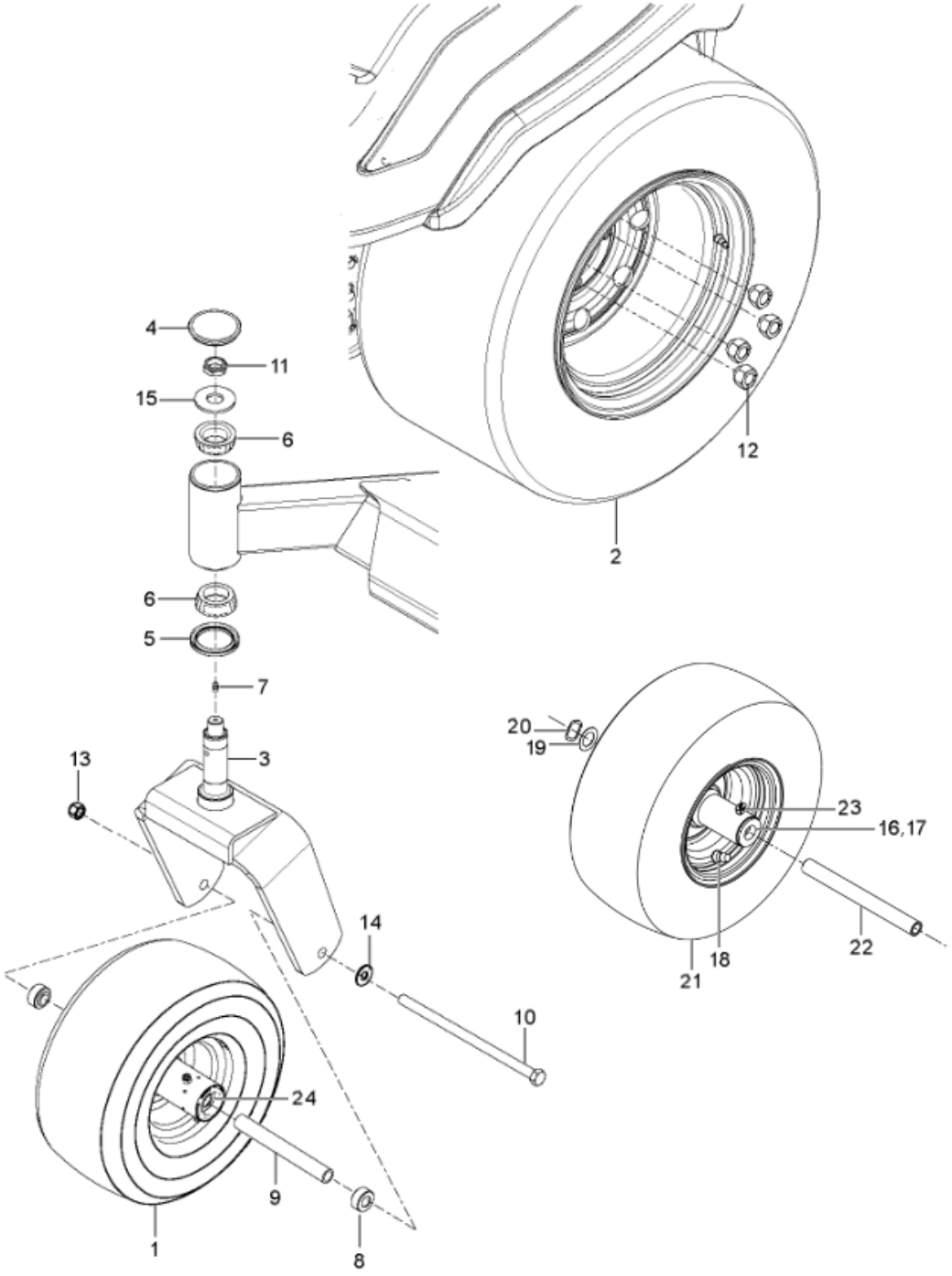

Ref.	Article N.	Description	Qty	Kit
1	582483902	PANEL	1	-
2	582483602	PANEL	1	-
3	586161801	HOUR METER	1	-
4	574455401	SWITCH	1	-
5	589887201	SWITCH	1	-
6	574455501	KEY	1	-
7	581878301	LIGHT *For 967930101-00, 967678701-00*	1	-

Ref.	Article N.	Description	Qty	Kit
7	574206901	CABLE *CHOKE/ For 96767860300, 96767860200, 96767860101*	1	-
8	582120301	THROTTLE CONTROL *46*	1	-
9	589819501	BATTERY *MX-9/ For 967930101-00, 967678701-00, 967678601-00*	1	-
9	589819502	BATTERY *MX-12/ For 967930101-00, 967678701-00, 967678601-00*	1	-
9	589819503	BATTERY *MX-14/ For 96767860300, 96767860200, 96767860101*	1	-
9	582460606	BRACKET *MX-14*	1	-
9	596990201	SERVICE KIT *MX-12 Bracket (Battery not included) For 967930101-00, 967678701-00, 967678601-00*	1	-
10	539103178	NUT CAP	1	-
11	539132624	KNOB	1	-
12	539102759	INSULATOR	2	-
13	592872701	FUEL GAUGE	2	-
14	539114341	SCREW	6	-
15	532199855	SCREW	2	-
16	582460801	SCREW	2	-
21	593777801	HARNESS *FOR CARB ENGINES*	1	-
21	593777803	HARNESS *FOR KOHLER & YAMAHA EFI*	1	-
22	589838501	HARNESS	1	-
23	574514001	TIMER *NOT SHOWN*	1	-
24	590632101	CABLE *NOT SHOWN*	1	-
25	539101714	SOLENOID *NOT SHOWN (SOLENOID KAW FX)*	1	-
1	574437301	DECAL *BELT ROUTING*	1	-
2	590209401	DECAL *MOTION/BRAKE RIGHT*	1	-
3	590209501	DECAL *MOTION_BRAKE_LEFT*	1	-
3	590807601	DECAL *Z554X*	1	-
4	581724301	DECAL	2	-

Ref.	Article N.	Description	Qty	Kit
		NO STEP		
5	539105745	DECAL *BATTERY WARNING*	1	-
6	539105744	DECAL *DANGER BELT*	2	-
7	581724401	DECAL *DEFLECTOR WARNING*	1	-
8	532424102	DECAL *SPARK ARRESTOR*	1	-
9	574455001	DECAL *CROWN LARGE*	1	-
10	574569006	DECAL *ROPS/ For 96767860300, 96767860200,*	1	-
10	593011101	DECAL *ROPS/ For 967930101-00, 967678701-00, 967678601-00*	1	-
11	574569002	DECAL *ROPS WARNING*	1	-
12	574569401	DECAL *FUSE*	1	-
13	584904601	DECAL *DECK/DEFLECT WARNING*	1	-
14	532428676	DECAL *CROWN SMALL*	1	-
15	590799301	DECAL *DECK HEIGHT*	1	-
16	590210001	DECAL *COMMERCIAL*	1	-
17	590846801	DECAL *MAINTANCE/SERVICE*	1	-
18	590210301	DECAL *CONTROL PANEL RIGHT - CHOKE /For 96767860300, 96767860200, 96767860101*	1	-
18	590210302	DECAL *CONTROL PANEL RIGHT-EFI/ For 967930101-00, 967678701-00, 967678601-00*	1	-
19	590210501	DECAL *CONTROL PANEL LEFT*	1	-
20	590209701	DECAL *TRANSMISSION WARNING*	1	-
21	590209202	DECAL *START W/ CHOKE*	1	-
22	577469001	DECAL *EMBLEM*	2	-

Ref.	Article N.	Description	Qty	Kit
30	577150101	DECAL *FUEL - NOT SHOWN*	1	-
31	590807801	DECAL *Z560X / For 967678601-00, 967678701-00*	1	-
32	590807901	DECAL *Z572X / For 967678601-00, 967678701-00*	1	-
1	582733302	PLATE -	1	-
2	525749501	CLUTCH -	1	-
3	522676702	STOP -	1	-
4	539118911	NIPPLE -	1	-
5	522837001	PLUG -	1	-
6	510019801	PULLEY -	1	-
7	539119680	ADAPTER -	1	-
8	539105072	90DEG.ELBOW 3/8NPT -	1	-
9	525749901	KEY -	1	-
10	587886001	MUFFLER -	1	-
11	539109618	O-RING -	1	-
12	505280001	TIE WRAP -	1	-
13	581332801	BOLT -	1	-
14	574233801	SCREW -	4	-
15	539990563	SCREW -	4	-
16	874780716	BOLT -	1	-
17	539990208	SCREW -	2	-
18	539102933	SCREW -	2	-
19	539108120	NUT	1	-

Ref.	Article N.	Description	Qty	Kit
		-		
20	539112899	NUT, 5/16-18, NYLOC -	8	-
21	539102582	NUT -	1	-
22	539102593	WASHER -	4	-
23	539990247	WASHER -	1	-
24	539125626	WASHER -	1	-
25	586839701	GASKET *NOT SHOWN*	2	-
1	582483105	FUEL TANK ASSY *For 96767860300, 96767860200, 96767860101, 967678701-00, 967678601-00*	1	-
1	590680505	TANK UNIT ASSY *For 967930101-00*	1	-
2	582481705	FUEL TANK ASSY *For 96767860300, 96767860200, 96767860101, 967678701-00, 967678601-00*	1	-
2	590680405	TANK UNIT ASSY *For 967930101-00*	1	-
3	587044550	HOSE -	1	-
4	587044526	HOSE -	1	-
5	587044517	HOSE -	1	-
6	587044846	HOSE -	1	-
7	587044808	HOSE *For 967930101-00*	1	-
7	587044833	HOSE *For 96767860300, 96767860200, 96767860101, 967678701-00, 967678601-00*	1	-
8	587044824	HOSE -	1	-
9	574206602	FITTING -	1	-
10	575018101	CAP -	2	-
11	582483301	GUARD -	1	-
12	590638801	SENSOR -	2	-

Ref.	Article N.	Description	Qty	Kit
13	576618101	TANK VENT -	2	-
14	539102679	VALVE -	1	-
15	582482301	GUARD -	1	-
15	525865402	TUBE ASSY -	1	-
16	532003645	BUSHING -	2	-
17	590209101	GROMMET -	2	-
18	584648201	GROMMET -	2	-
19	582481502	BRACKET -	2	-
20	582481602	BRACKET -	2	-
20	525865403	TUBE ASSY -	1	-
21	582483401	COVER -	1	-
22	539912222	CLAMP -	6	-
23	575436501	CLAMP -	6	-
24	582482601	CLIP -	8	-
25	505280001	TIE WRAP -	5	-
26	874490548	BOLT -	6	-
27	582482401	COVER -	1	-
27	590257301	SCREW -	6	-
28	817490516	SCREW -	6	-
29	582484201	SCREW -	8	-
30	539112899	NUT, 5/16-18, NYLOC -	20	-
31	532126684	SHIM	6	-

Ref.	Article N.	Description	Qty	Kit
		-		
1	591359901	SHIELD -	1	-
2	582461206	BRACKET -	1	-
3	539102587	ABSORBER -	4	-
4	582461701	HOLDER ASSY -	3	-
5	582461303	ROD -	2	-
6	874780412	BOLT -	3	-
7	874490548	BOLT -	4	-
8	503200001	SCREW EHHFM -	3	-
9	587592101	SCREW -	4	-
10	521991101	NUT -	2	-
11	539112899	NUT, 5/16-18, NYLOC -	8	-
12	532191730	NUT -	3	-
13	731231405	HEXAGON NUT -	3	-
14	873350800	NUT -	2	-
1	582463102	ARM -	1	-
2	501603701	BEARING -	2	-
3	582479102	BRACKET -	4	-
4	582480101	CLAMP -	4	-
5	529311401	FITTING -	2	-
6	582479404	FRAME -	1	-
7	582480204	HOSE -	2	-

Ref.	Article N.	Description	Qty	Kit
8	586933802	MOUNT -	1	-
9	582468101	SHAFT -	1	-
10	587654101	PULLEY -	2	-
11	582716201	ROD END -	1	-
12	582468401	SPRING -	1	-
13	574499201	TANK -	2	-
14	582480001	TRANSMISSION -	1	-
15	582480002	TRANSMISSION -	1	-
16	576127201	FILTER -	1	-
17	582480402	V-BELT -	1	-
18	874490652	SCREW -	1	-
19	574210601	SCREW -	8	-
20	525828901	BOLT *For 96767860300, 96767860200, 96767860101*	8	-
20	874490848	SCREW *For 967930101-00, 967678701-00, 967678601-00*	8	-
21	539100145	BOLT -	2	-
22	539990645	BOLT -	2	-
23	532165857	SCREW -	4	-
24	539913847	BOLT -	1	-
25	521991101	NUT -	8	-
26	521996501	NUT -	6	-
27	819133210	WASHER -	1	-
1	591359704	CUTTING DECK	1	-

Ref.	Article N.	Description	Qty	Kit
		-		
2	588264805	DRIVE BELT -	1	-
3	575265901	BLADE -	3	-
4	582462702	ARM -	1	-
5	521979701	PULLEY -	3	-
6	510015101	PULLEY -	3	-
7	582463003	PULLEY -	1	-
8	582463006	PULLEY -	1	-
9	582468801	CHUTE -	1	-
10	510254501	SHIELD -	3	-
11	574169601	ROLLER -	4	-
12	574196401	TUBE -	2	-
13	574196501	TUBE -	1	-
14	539131518	BEARING -	2	-
15	510263701	BEARING -	2	-
16	582467302	BRACKET -	1	-
17	582463203	BRACKET *For 96767860300, 96767860200, 96767860101, 967678701-00, 967678601-00*	1	-
17	582463207	BRACKET *For 967930101-00*	1	-
18	582463204	BRACKET *For 96767860300, 96767860200, 96767860101, 967678701-00, 967678601-00*	1	-
18	582463208	BRACKET *For 967930101-00*	1	-
19	582472502	BELT GUARD *For 96767860300, 96767860200, 96767860101, 967678701-00, 967678601-00*	1	-
19	594913302	BELT GUIDE *For 967930101-00*	1	-

Ref.	Article N.	Description	Qty	Kit
20	582470201	KEEPER -	1	-
21	539104411	KNOB -	2	-
22	590523702	PLATE -	1	-
23	582466401	PLATE -	1	-
24	582468101	SHAFT -	1	-
25	582468301	SPACER -	1	-
26	589455201	SPACER -	1	-
27	582468001	SPRING -	1	-
28	510437502	BAFFLE -	1	-
29	539104763	CLIP -	2	-
30	539115620	1/4-20X3/4 CARR BLT -	4	-
31	872140610	BOLT -	3	-
32	510022301	SCREW -	2	-
33	872140628	BOLT -	2	-
34	872140864	BOLT -	1	-
35	874490644	BOLT -	2	-
36	574210601	SCREW -	18	-
37	525612801	SCREW -	2	-
38	521996601	SCREW -	1	-
39	582476401	SCREW -	4	-
40	539130315	BOLT -	9	-
41	539119007	SCREW	3	-

Ref.	Article N.	Description	Qty	Kit
		-		
42	574202001	BOLT -	1	-
43	539913847	BOLT -	1	-
44	521996501	NUT -	10	-
45	539112899	NUT, 5/16-18, NYLOC -	4	-
46	521991101	NUT -	3	-
47	539109332	NUT -	1	-
48	539976978	NUT -	4	-
49	539106504	WASHER -	2	-
50	539109600	WASHER -	9	-
1	582462602	SHAFT -	1	-
2	592654001	ARM -	1	-
2	592654002	ARM -	1	-
3	582465402	ARM -	2	-
4	582463902	ARM -	2	-
5	582462001	ARM -	1	-
6	582462002	ARM -	1	-
7	582464601	ROD -	2	-
8	582472801	ROD -	1	-
9	582471401	ROD -	1	-
10	510408301	PEDAL -	1	-
11	510089501	PAD -	1	-

Ref.	Article N.	Description	Qty	Kit
12	510023902	BLOCK -	4	-
13	582467201	BLOCK -	1	-
14	582466902	BRACKET -	1	-
15	582468902	BRACKET -	2	-
16	589454103	LEVER -	1	-
17	592654101	LEVER -	1	-
18	539109693	LIFT CHAIN - 3 LINK -	2	-
18	589454104	LEVER -	1	-
19	539102641	CHAIN -	2	-
20	582464801	PIVOT -	2	-
21	582763902	PLATE -	1	-
22	589453201	LEVER ASSY -	1	-
23	582469001	SHACKLE -	2	-
24	582464201	SHAFT -	2	-
25	593091801	SPRING -	2	-
26	582471301	SPRING -	1	-
27	582467001	SWIVEL -	1	-
28	582467101	SWIVEL -	1	-
29	582469901	BUSHING -	2	-
30	582469801	BUSHING -	2	-
31	510089201	BUSHING -	5	-
32	539912730	RING	1	-

Ref.	Article N.	Description	Qty	Kit
		-		
33	539990870	RING -	2	-
34	590465501	PIN -	1	-
35	539102889	SPLIT PIN -	2	-
36	582466701	SCREW -	4	-
37	582472601	SCREW -	2	-
38	574202001	BOLT -	2	-
39	539990580	SCREW -	1	-
40	589786001	SCREW -	4	-
41	501064102	SCREW -	3	-
42	501064101	SCREW -	4	-
43	510408201	BOLT -	1	-
44	539101175	SCREW -	4	-
45	582465601	SCREW -	2	-
46	589677701	NUT -	3	-
47	539976978	NUT -	1	-
48	539990546	NUT -	2	-
49	539119124	NUT -	4	-
50	539110340	NUT -	3	-
51	521996501	NUT -	6	-
52	539112899	NUT, 5/16-18, NYLOC -	2	-
53	539132019	NUT -	4	-

Ref.	Article N.	Description	Qty	Kit
54	582466601	NUT -	4	-
55	539108732	NUT 3/8-24 HEX JAM ZD -	2	-
56	539991043	BUSHING -	2	-
1	579866104	SEAT ASSY -	1	-
1	582460103	SEAT *Fits 97058500100*	1	-
2	582478801	BAR -	1	-
3	582478201	BRACKET -	2	-
4	590555002	BRACKET -	1	-
5	590481801	ISOLATOR -	8	-
6	539116377	INSERT -	4	-
7	590373501	LATCH -	1	-
8	590506802	PLATE -	1	-
9	590507201	ROD -	1	-
10	539113952	SPRING -	2	-
11	582478101	NUT -	4	-
12	532192749	SWITCH -	1	-
13	539108392	HCS 5/16-18 X 5/8 GR 5 ZD -	4	-
14	582478901	SCREW -	2	-
15	582478501	SCREW -	2	-
16	539990316	BOLT -	8	-
17	582478601	NUT -	2	-
18	539913847	BOLT	1	-

Ref.	Article N.	Description	Qty	Kit
		-		
19	539112899	NUT, 5/16-18, NYLOC -	6	-
20	522023401	WASHER -	2	-
21	532413524	WASHER -	8	-
22	539990118	WASHER -	2	-
23	539990187	WASHER -	4	-
24	579866109	SEAT ASSY *Knob*	1	-
25	579866108	SEAT ASSY *REPLACEMENT PAD ONLY*	2	-
1	580942201	HUB -	3	-
2	580942101	SHAFT -	3	-
3	580942701	V-RING -	6	-
4	580942601	SEAL -	6	-
5	583911101	BEARING KIT *ALSO ORDER TOOL KIT*	3	-
6	580942301	SPACER -	3	-
7	580942501	CARRIER -	3	-
8	539976998	NIPPLE -	3	-
9	539977326	FITTING -	3	-
10	539130653	NUT -	3	-
11	580943306	SPINDLE -	3	-
12	580942801	SHIM *For 967678601-00, 967678701-00*	1	-
13	574754201	KIT *NOT SHOWN*	1	-
1	582475501	LEVER *LEFT*	1	-

Ref.	Article N.	Description	Qty	Kit
2	582475502	LEVER *RIGHT*	1	-
3	596925601	ROD *RIGHT SIDE ASSY*	1	-
3	596925701	ROD *LEFT SIDE ASSY*	1	-
3	598852501	SERVICE KIT *COUPLER KIT. CONTAINS (2) COUPLERS THAT FITS BOTH LH/RH SIDES. REF # 4 SCREWS INTO THIS COUPLER*	1	-
4	588692502	ROD *ROD.END.MALE.LH THREAD*	2	-
5	579764601	JOINT *JOINT.RH.THREAD.FEMALE.5/16*	2	-
6	539923515	SPACER	2	-
7	597744702	BRACKET	2	-
8	592653801	CARRIER *w/BEARINGS LEFT*	1	-
8	592653802	CARRIER *w/BEARINGS RIGHT*	1	-
9	592653901	CARRIER	2	-
12	582477802	BRACKET *LEFT*	1	-
12	582477804	BRACKET *RIGHT*	1	-
13	582476902	BRACKET	2	-
14	582475102	BRACKET	4	-
15	587225301	PIN	2	-
16	582551901	CLIP	2	-
17	588775401	DAMPER	2	-
18	582477401	PIN	2	-
19	589505102	PIVOT	2	-
20	589489601	RETAINER	2	-
21	589500902	SWITCH	2	-
22	582475001	SPACER	2	-
23	582711303	SPACER	2	-
24	582477001	SPRING	4	-
25	532151332	SPRING	2	-
26	582477702	SPRING	2	-
27	597744501	ADAPTER	2	-
28	582477501	CABLE	2	-
29	539110607	STUD	4	-

Ref.	Article N.	Description	Qty	Kit
30	582477602	BRACKET	2	-
31	582476801	BEARING	4	-
32	539131518	BEARING	8	-
33	532170165	BOLT	4	-
34	525544001	BOLT	4	-
35	525465402	SCREW	2	-
36	539976934	SCREW	4	-
37	582477102	SCREW	4	-
38	582476401	SCREW	4	-
39	596240801	BOLT	2	-
40	595901501	BOLT	4	-
41	577117701	SCREW	2	-
42	589505602	SCREW	2	-
44	594944401	NUT	14	-
45	596040901	HEXAGON NUT	4	-
46	521996502	NUT	6	-
47	539990184	NUT	4	-
48	596134901	WASHER	2	-
49	539990187	WASHER	4	-
50	596204101	WASHER	2	-
51	522023401	WASHER	4	-
1	582475501	LEVER -	1	-
2	582475502	LEVER -	1	-
3	501567001	ROD *For 967930101-00*	1	-
3	592653701	CONTROL *LEFT For 96767860300, 96767860200, 96767860101, 967678701. 967678601*	1	-
3	592653702	CONTROL *RIGHT*	1	-
4	588692502	ROD -	2	-
5	579764601	JOINT -	2	-
6	582484001	BELLOWS *For 967930101-00*	1	-
6	591193301	SERVICE KIT *For 96767860300, 96767860200, 96767860101, 967678701-00, 967678601-00*	1	-
7	582484101	BELLOWS *For 967930101-00*	1	-

Ref.	Article N.	Description	Qty	Kit
7	591193302	SERVICE KIT *For 96767860300, 96767860200, 96767860101, 967678701-00, 967678601-00*	1	-
8	592653801	CARRIER *w/BEARINGS LEFT/ For 96767860300, 96767860200, 96767860101, 967678701-00, 967678601-00*	1	-
8	592653802	CARRIER *w/BEARINGS LEFT/ For 967930101-00*	1	-
9	592653901	CARRIER -	2	-
10	592724002	CONTROL -	1	-
10	592724001	CONTROL -	1	-
11	592653501	PARKING BRAKE -	1	-
12	582477802	BRACKET *LEFT*	1	-
12	582477804	BRACKET *RIGHT*	1	-
13	582476901	BRACKET -	2	-
14	582475102	BRACKET -	4	-
15	587225301	PIN -	2	-
16	582551901	CLIP -	2	-
17	588775401	DAMPER -	2	-
18	582477401	PIN -	2	-
19	589505101	PIVOT -	2	-
20	589489601	RETAINER -	2	-
21	589500901	SWITCH -	2	-
22	582475001	SPACER -	2	-
23	582711303	SPACER -	2	-
24	582477001	SPRING -	4	-

Ref.	Article N.	Description	Qty	Kit
25	532151332	SPRING -	2	-
26	582477701	SPRING -	2	-
27	582477201	YOKE -	2	-
28	582477501	CABLE -	2	-
29	539110607	STUD -	4	-
30	582477601	BRACKET -	2	-
31	582476801	BEARING -	4	-
32	539131518	BEARING -	8	-
33	539110303	BOLT -	4	-
34	525544001	BOLT -	4	-
35	525465401	SCREW -	2	-
36	539976934	SCREW -	4	-
37	582477101	SCREW -	4	-
38	582476401	SCREW -	2	-
39	539115574	EYE BOLT -	2	-
40	539990208	SCREW -	4	-
41	577117701	SCREW -	6	-
42	589505601	SCREW -	2	-
43	582482901	RIVET -	12	-
44	539112899	NUT, 5/16-18, NYLOC -	14	-
45	539990223	NUT -	4	-
46	521996501	NUT	6	-

Ref.	Article N.	Description	Qty	Kit
		-		
47	539990184	NUT -	4	-
48	539990692	WASHER -	2	-
49	539990187	WASHER -	4	-
50	819111116	WASHER -	2	-
51	522023401	WASHER -	2	-
1	599893003	COVER -	1	-
2	599893004	COVER -	1	-
3	596564002	BOLT -	4	-
1	599156701	TIRE *fits 967669801-00, 967699802-00*	2	-
1	510154601	TIRE *Use From SN: 060117F000001 To SN: 090820F999999*	2	-
2	539105152	TIRE *24x12-12 Tire Only*	2	-
2	510154502	WHEEL RIM *Rim Only*	2	-
2	510154501	TIRE *Tire & Rim Assembly*	2	-
3	525611902	FORK -	2	-
4	510034001	CAP -	2	-
5	510034301	SEAL -	2	-
6	510034403	BEARING -	4	-
7	596623501	VALVE -	2	-
8	590690701	SPACER *Use From SN: 060117F000001 To SN: 090820F999999*	4	-
9	590704902	SPACER *Use From SN: 060117F000001 To SN: 090820F999999*	2	-
10	594946501	BOLT -	2	-

Ref.	Article N.	Description	Qty	Kit
11	522842602	NUT -	2	-
12	587653902	NUT -	8	-
13	873930800	NUT *For 967678802-01, 967678801-01*	2	-
13	521991102	NUT *For 96793040300, 967669703-01*	2	-
14	595086801	WASHER -	2	-
15	574824701	WASHER -	2	-
16	539102484	BEARING *Use after SN: 090920F000001*	4	-
17	539105307	ROLLER BEARING *Use after SN: 090920F000001*	4	-
18	539912234	VALVE *Use after SN: 090920F000001*	2	-
19	599405101	SHIM *Use after SN: 090920F000001*	2	-
20	539133007	WASHER *Use after SN: 090920F000001*	2	-
21	539105522	TIRE *13X6.5-6 Tire Only Use After SN: 090920F000001*	2	-
21	581199501	WHEEL ASSY *Use after SN: 090920F000001*	2	-
22	575334901	SPACER *Use after SN: 090920F000001*	2	-
23	596623501	VALVE -	2	-
24	597383801	SERVICE KIT *Use From SN: 060117F000001 To SN: 090820F999999*	2	-
1	597383801	SERVICE KIT -	1	-
1	510154601	TIRE -	2	-
2	522905101	TIRE -	2	-
3	525611902	FORK -	2	-
4	510034001	CAP -	2	-
4	522905102	TIRE	2	-

Ref.	Article N.	Description	Qty	Kit
		-		
5	510034301	SEAL -	2	-
6	510034403	BEARING -	4	-
7	539101474	NIPPLE -	2	-
8	590690701	SPACER -	4	-
9	590704901	SPACER -	2	-
10	539105517	BOLT -	2	-
11	522842601	NUT -	2	-
12	587653902	NUT -	8	-
13	873930800	NUT -	2	-
14	539990250	WASHER -	2	-
15	574824701	WASHER -	2	-
1	591359801	FRAME *w/ SAFETY DECALS*	1	-
2	522675702	BUMPER -	1	-
3	587898002	GUARD -	1	-
4	589808802	BRACKET -	2	-
5	589807202	BRACKET -	1	-
6	589448202	BRACKET -	1	-
7	589448204	BRACKET -	1	-
8	582481101	BRACKET -	2	-
9	582481002	PANEL *For 96767860300, 96767860200, 96767860101, 967678701-00, 967678601-00*	1	-
9	595327502	PANEL *For 967930101-00*	1	-

Ref.	Article N.	Description	Qty	Kit
10	582481004	PANEL -	1	-
11	582480803	PANEL -	1	-
12	582480804	PANEL -	1	-
13	589304602	PLATE -	1	-
14	574228602	PLATE *For 96767860300, 96767860200, 96767860101, 967678701-00, 967678601-00*	1	-
14	596694102	PLATE *For 967930101-00*	1	-
15	582478701	BUMPER -	2	-
16	575811501	BUMPER -	2	-
17	522801401	BUMPER -	4	-
18	539102587	ABSORBER -	2	-
19	589745202	COVER -	1	-
20	582480502	CROSS MEMBER -	1	-
21	589744001	ISOLATOR -	2	-
22	539104411	KNOB -	1	-
23	591344501	KNOB -	2	-
24	591101701	PIN -	2	-
25	591101601	PIN -	2	-
26	582460702	PLATE -	1	-
27	582460606	BRACKET *MX-14*	1	-
28	589500701	BRACKET -	1	-
29	539104763	CLIP -	7	-
30	589806801	NUT	2	-

Ref.	Article N.	Description	Qty	Kit
		-		
31	539111028	NUTSERT 5/16-18 THICK GRIP -	2	-
32	525612801	SCREW -	4	-
33	574233801	SCREW -	2	-
34	525544001	BOLT -	2	-
35	539113226	BOLT -	4	-
36	577117701	SCREW -	4	-
37	539100145	BOLT -	2	-
38	872140404	BOLT -	4	-
39	872140406	BOLT *For 96767860300, 96767860200, 96767860101, 967678701-00, 967678601-00*	2	-
39	539115620	1/4-20X3/4 CARR BLT *For 967930101-00*	2	-
40	539990316	BOLT -	14	-
41	539990208	SCREW -	2	-
42	539110303	BOLT -	4	-
43	580754601	BOLT -	6	-
44	589797201	SCREW -	2	-
45	817490408	SCREW -	2	-
46	585986101	BOLT -	2	-
47	525829101	NUT -	6	-
48	539976978	NUT -	6	-
49	521996501	NUT -	12	-
50	539112899	NUT, 5/16-18, NYLOC -	21	-

Ref.	Article N.	Description	Qty	Kit
51	539102653	WASHER -	4	-
52	539108120	NUT *For 967930101-00*	1	-
53	583611601	BOLT *For 967930101-00*	1	-
54	591176601	BOLT *For 967930101-00*	1	-
58	590877803	ROPS *ROPS ASSY*	1	-

WHEELS AND TIRES

For 96767860101, 967930101-00, 967678701-00, 967678601-00

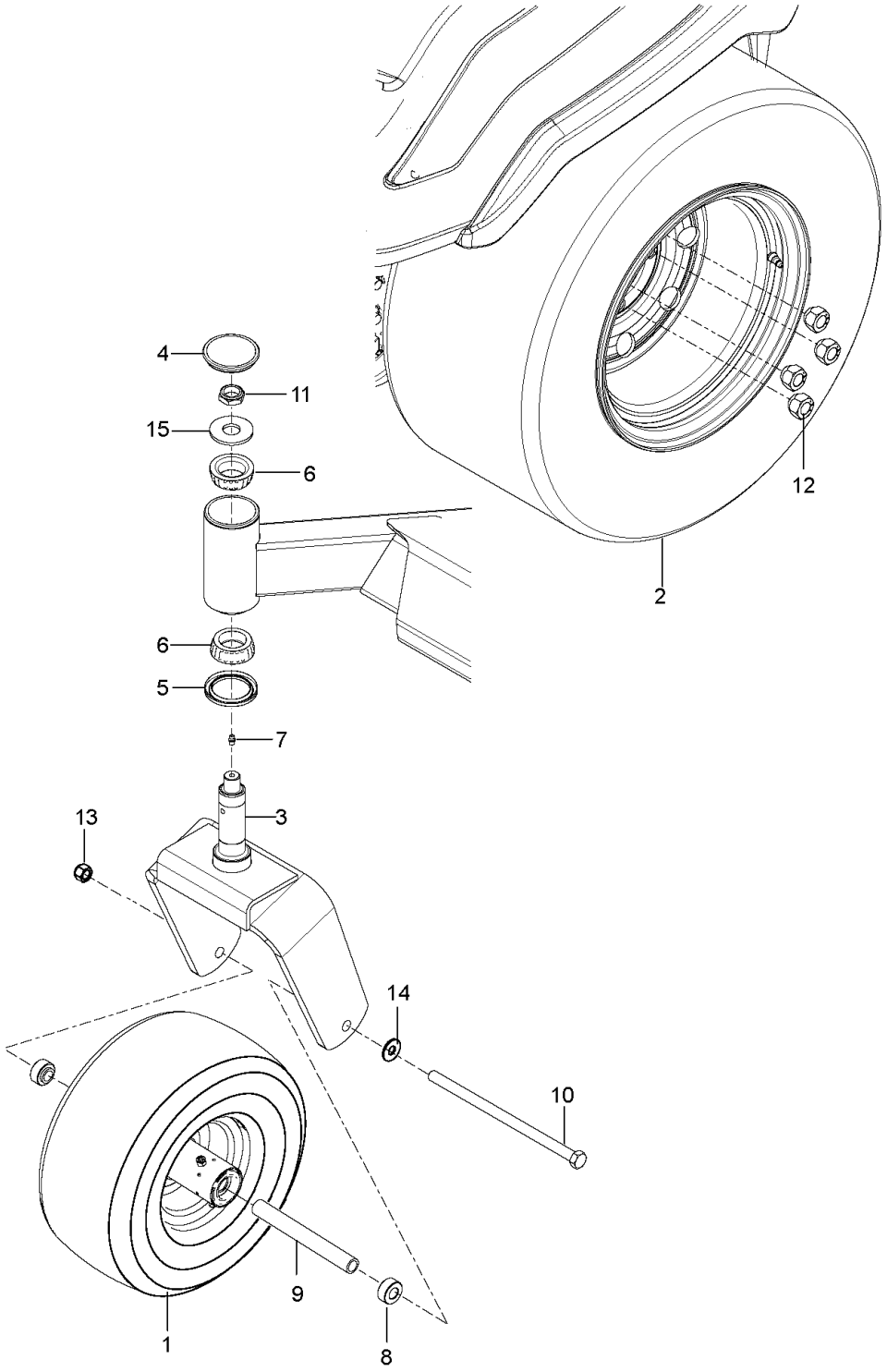

Ref.	Article N.	Description	Qty	Kit
1	582483902	PANEL	1	-
2	582483602	PANEL	1	-
3	586161801	HOUR METER	1	-
4	574455401	SWITCH	1	-
5	589887201	SWITCH	1	-

Ref.	Article N.	Description	Qty	Kit
6	574455501	KEY	1	-
7	581878301	LIGHT *For 967930101-00, 967678701-00*	1	-
7	574206901	CABLE *CHOKE/ For 96767860300, 96767860200, 96767860101*	1	-
8	582120301	THROTTLE CONTROL *46*	1	-
9	589819501	BATTERY *MX-9/ For 967930101-00, 967678701-00, 967678601-00*	1	-
9	589819502	BATTERY *MX-12/ For 967930101-00, 967678701-00, 967678601-00*	1	-
9	589819503	BATTERY *MX-14/ For 96767860300, 96767860200, 96767860101*	1	-
9	582460606	BRACKET *MX-14*	1	-
9	596990201	SERVICE KIT *MX-12 Bracket (Battery not included) For 967930101-00, 967678701-00, 967678601-00*	1	-
10	539103178	NUT CAP	1	-
11	539132624	KNOB	1	-
12	539102759	INSULATOR	2	-
13	592872701	FUEL GAUGE	2	-
14	539114341	SCREW	6	-
15	532199855	SCREW	2	-
16	582460801	SCREW	2	-
21	593777801	HARNESS *FOR CARB ENGINES*	1	-
21	593777803	HARNESS *FOR KOHLER & YAMAHA EFI*	1	-
22	589838501	HARNESS	1	-
23	574514001	TIMER *NOT SHOWN*	1	-
24	590632101	CABLE *NOT SHOWN*	1	-
25	539101714	SOLENOID *NOT SHOWN (SOLENOID KAW FX)*	1	-
1	574437301	DECAL *BELT ROUTING*	1	-
2	590209401	DECAL *MOTION/BRAKE RIGHT*	1	-
3	590209501	DECAL *MOTION_BRAKE_LEFT*	1	-

Ref.	Article N.	Description	Qty	Kit
3	590807601	DECAL *Z554X*	1	-
4	581724301	DECAL *NO STEP*	2	-
5	539105745	DECAL *BATTERY WARNING*	1	-
6	539105744	DECAL *DANGER BELT*	2	-
7	581724401	DECAL *DEFLECTOR WARNING*	1	-
8	532424102	DECAL *SPARK ARRESTOR*	1	-
9	574455001	DECAL *CROWN LARGE*	1	-
10	574569006	DECAL *ROPS/ For 96767860300, 96767860200,*	1	-
10	593011101	DECAL *ROPS/ For 967930101-00, 967678701-00, 967678601-00*	1	-
11	574569002	DECAL *ROPS WARNING*	1	-
12	574569401	DECAL *FUSE*	1	-
13	584904601	DECAL *DECK/DEFLECT WARNING*	1	-
14	532428676	DECAL *CROWN SMALL*	1	-
15	590799301	DECAL *DECK HEIGHT*	1	-
16	590210001	DECAL *COMMERCIAL*	1	-
17	590846801	DECAL *MAINTANCE/SERVICE*	1	-
18	590210301	DECAL *CONTROL PANEL RIGHT - CHOKE /For 96767860300, 96767860200, 96767860101*	1	-
18	590210302	DECAL *CONTROL PANEL RIGHT-EFI/ For 967930101-00, 967678701-00, 967678601-00*	1	-
19	590210501	DECAL *CONTROL PANEL LEFT*	1	-
20	590209701	DECAL *TRANSMISSION WARNING*	1	-
21	590209202	DECAL	1	-

Ref.	Article N.	Description	Qty	Kit
		START W/ CHOKE		
22	577469001	DECAL *EMBLEM*	2	-
30	577150101	DECAL *FUEL - NOT SHOWN*	1	-
31	590807801	DECAL *Z560X / For 967678601-00, 967678701-00*	1	-
32	590807901	DECAL *Z572X / For 967678601-00, 967678701-00*	1	-
1	582733302	PLATE -	1	-
2	525749501	CLUTCH -	1	-
3	522676702	STOP -	1	-
4	539118911	NIPPLE -	1	-
5	522837001	PLUG -	1	-
6	510019801	PULLEY -	1	-
7	539119680	ADAPTER -	1	-
8	539105072	90DEG.ELBOW 3/8NPT -	1	-
9	525749901	KEY -	1	-
10	587886001	MUFFLER -	1	-
11	539109618	O-RING -	1	-
12	505280001	TIE WRAP -	1	-
13	581332801	BOLT -	1	-
14	574233801	SCREW -	4	-
15	539990563	SCREW -	4	-
16	874780716	BOLT -	1	-
17	539990208	SCREW -	2	-

Ref.	Article N.	Description	Qty	Kit
18	539102933	SCREW -	2	-
19	539108120	NUT -	1	-
20	539112899	NUT, 5/16-18, NYLOC -	8	-
21	539102582	NUT -	1	-
22	539102593	WASHER -	4	-
23	539990247	WASHER -	1	-
24	539125626	WASHER -	1	-
25	586839701	GASKET *NOT SHOWN*	2	-
1	582483105	FUEL TANK ASSY *For 96767860300, 96767860200, 96767860101, 967678701-00, 967678601-00*	1	-
1	590680505	TANK UNIT ASSY *For 967930101-00*	1	-
2	582481705	FUEL TANK ASSY *For 96767860300, 96767860200, 96767860101, 967678701-00, 967678601-00*	1	-
2	590680405	TANK UNIT ASSY *For 967930101-00*	1	-
3	587044550	HOSE -	1	-
4	587044526	HOSE -	1	-
5	587044517	HOSE -	1	-
6	587044846	HOSE -	1	-
7	587044808	HOSE *For 967930101-00*	1	-
7	587044833	HOSE *For 96767860300, 96767860200, 96767860101, 967678701-00, 967678601-00*	1	-
8	587044824	HOSE -	1	-
9	574206602	FITTING -	1	-
10	575018101	CAP -	2	-
11	582483301	GUARD	1	-

Ref.	Article N.	Description	Qty	Kit
		-		
12	590638801	SENSOR -	2	-
13	576618101	TANK VENT -	2	-
14	539102679	VALVE -	1	-
15	582482301	GUARD -	1	-
15	525865402	TUBE ASSY -	1	-
16	532003645	BUSHING -	2	-
17	590209101	GROMMET -	2	-
18	584648201	GROMMET -	2	-
19	582481502	BRACKET -	2	-
20	582481602	BRACKET -	2	-
20	525865403	TUBE ASSY -	1	-
21	582483401	COVER -	1	-
22	539912222	CLAMP -	6	-
23	575436501	CLAMP -	6	-
24	582482601	CLIP -	8	-
25	505280001	TIE WRAP -	5	-
26	874490548	BOLT -	6	-
27	582482401	COVER -	1	-
27	590257301	SCREW -	6	-
28	817490516	SCREW -	6	-
29	582484201	SCREW -	8	-

Ref.	Article N.	Description	Qty	Kit
30	539112899	NUT, 5/16-18, NYLOC -	20	-
31	532126684	SHIM -	6	-
1	591359901	SHIELD -	1	-
2	582461206	BRACKET -	1	-
3	539102587	ABSORBER -	4	-
4	582461701	HOLDER ASSY -	3	-
5	582461303	ROD -	2	-
6	874780412	BOLT -	3	-
7	874490548	BOLT -	4	-
8	503200001	SCREW EHHFM -	3	-
9	587592101	SCREW -	4	-
10	521991101	NUT -	2	-
11	539112899	NUT, 5/16-18, NYLOC -	8	-
12	532191730	NUT -	3	-
13	731231405	HEXAGON NUT -	3	-
14	873350800	NUT -	2	-
1	582463102	ARM -	1	-
2	501603701	BEARING -	2	-
3	582479102	BRACKET -	4	-
4	582480101	CLAMP -	4	-
5	529311401	FITTING -	2	-
6	582479404	FRAME	1	-

Ref.	Article N.	Description	Qty	Kit
		-		
7	582480204	HOSE -	2	-
8	586933802	MOUNT -	1	-
9	582468101	SHAFT -	1	-
10	587654101	PULLEY -	2	-
11	582716201	ROD END -	1	-
12	582468401	SPRING -	1	-
13	574499201	TANK -	2	-
14	582480001	TRANSMISSION -	1	-
15	582480002	TRANSMISSION -	1	-
16	576127201	FILTER -	1	-
17	582480402	V-BELT -	1	-
18	874490652	SCREW -	1	-
19	574210601	SCREW -	8	-
20	525828901	BOLT *For 96767860300, 96767860200, 96767860101*	8	-
20	874490848	SCREW *For 967930101-00, 967678701-00, 967678601-00*	8	-
21	539100145	BOLT -	2	-
22	539990645	BOLT -	2	-
23	532165857	SCREW -	4	-
24	539913847	BOLT -	1	-
25	521991101	NUT -	8	-
26	521996501	NUT -	6	-

Ref.	Article N.	Description	Qty	Kit
27	819133210	WASHER -	1	-
1	591359704	CUTTING DECK -	1	-
2	588264805	DRIVE BELT -	1	-
3	575265901	BLADE -	3	-
4	582462702	ARM -	1	-
5	521979701	PULLEY -	3	-
6	510015101	PULLEY -	3	-
7	582463003	PULLEY -	1	-
8	582463006	PULLEY -	1	-
9	582468801	CHUTE -	1	-
10	510254501	SHIELD -	3	-
11	574169601	ROLLER -	4	-
12	574196401	TUBE -	2	-
13	574196501	TUBE -	1	-
14	539131518	BEARING -	2	-
15	510263701	BEARING -	2	-
16	582467302	BRACKET -	1	-
17	582463203	BRACKET *For 96767860300, 96767860200, 96767860101, 967678701-00, 967678601-00*	1	-
17	582463207	BRACKET *For 967930101-00*	1	-
18	582463204	BRACKET *For 96767860300, 96767860200, 96767860101, 967678701-00, 967678601-00*	1	-
18	582463208	BRACKET *For 967930101-00*	1	-
19	582472502	BELT GUARD	1	-

Ref.	Article N.	Description	Qty	Kit
		For 96767860300, 96767860200, 96767860101, 967678701-00, 967678601-00		
19	594913302	BELT GUIDE *For 967930101-00*	1	-
20	582470201	KEEPER -	1	-
21	539104411	KNOB -	2	-
22	590523702	PLATE -	1	-
23	582466401	PLATE -	1	-
24	582468101	SHAFT -	1	-
25	582468301	SPACER -	1	-
26	589455201	SPACER -	1	-
27	582468001	SPRING -	1	-
28	510437502	BAFFLE -	1	-
29	539104763	CLIP -	2	-
30	539115620	1/4-20X3/4 CARR BLT -	4	-
31	872140610	BOLT -	3	-
32	510022301	SCREW -	2	-
33	872140628	BOLT -	2	-
34	872140864	BOLT -	1	-
35	874490644	BOLT -	2	-
36	574210601	SCREW -	18	-
37	525612801	SCREW -	2	-
38	521996601	SCREW -	1	-
39	582476401	SCREW -	4	-

Ref.	Article N.	Description	Qty	Kit
40	539130315	BOLT -	9	-
41	539119007	SCREW -	3	-
42	574202001	BOLT -	1	-
43	539913847	BOLT -	1	-
44	521996501	NUT -	10	-
45	539112899	NUT, 5/16-18, NYLOC -	4	-
46	521991101	NUT -	3	-
47	539109332	NUT -	1	-
48	539976978	NUT -	4	-
49	539106504	WASHER -	2	-
50	539109600	WASHER -	9	-
1	582462602	SHAFT -	1	-
2	592654001	ARM -	1	-
2	592654002	ARM -	1	-
3	582465402	ARM -	2	-
4	582463902	ARM -	2	-
5	582462001	ARM -	1	-
6	582462002	ARM -	1	-
7	582464601	ROD -	2	-
8	582472801	ROD -	1	-
9	582471401	ROD -	1	-
10	510408301	PEDAL	1	-

Ref.	Article N.	Description	Qty	Kit
		-		
11	510089501	PAD -	1	-
12	510023902	BLOCK -	4	-
13	582467201	BLOCK -	1	-
14	582466902	BRACKET -	1	-
15	582468902	BRACKET -	2	-
16	589454103	LEVER -	1	-
17	592654101	LEVER -	1	-
18	539109693	LIFT CHAIN - 3 LINK -	2	-
18	589454104	LEVER -	1	-
19	539102641	CHAIN -	2	-
20	582464801	PIVOT -	2	-
21	582763902	PLATE -	1	-
22	589453201	LEVER ASSY -	1	-
23	582469001	SHACKLE -	2	-
24	582464201	SHAFT -	2	-
25	593091801	SPRING -	2	-
26	582471301	SPRING -	1	-
27	582467001	SWIVEL -	1	-
28	582467101	SWIVEL -	1	-
29	582469901	BUSHING -	2	-
30	582469801	BUSHING -	2	-

Ref.	Article N.	Description	Qty	Kit
31	510089201	BUSHING -	5	-
32	539912730	RING -	1	-
33	539990870	RING -	2	-
34	590465501	PIN -	1	-
35	539102889	SPLIT PIN -	2	-
36	582466701	SCREW -	4	-
37	582472601	SCREW -	2	-
38	574202001	BOLT -	2	-
39	539990580	SCREW -	1	-
40	589786001	SCREW -	4	-
41	501064102	SCREW -	3	-
42	501064101	SCREW -	4	-
43	510408201	BOLT -	1	-
44	539101175	SCREW -	4	-
45	582465601	SCREW -	2	-
46	589677701	NUT -	3	-
47	539976978	NUT -	1	-
48	539990546	NUT -	2	-
49	539119124	NUT -	4	-
50	539110340	NUT -	3	-
51	521996501	NUT -	6	-
52	539112899	NUT, 5/16-18, NYLOC	2	-

Ref.	Article N.	Description	Qty	Kit
		-		
53	539132019	NUT -	4	-
54	582466601	NUT -	4	-
55	539108732	NUT 3/8-24 HEX JAM ZD -	2	-
56	539991043	BUSHING -	2	-
1	579866104	SEAT ASSY -	1	-
1	582460103	SEAT *Fits 97058500100*	1	-
2	582478801	BAR -	1	-
3	582478201	BRACKET -	2	-
4	590555002	BRACKET -	1	-
5	590481801	ISOLATOR -	8	-
6	539116377	INSERT -	4	-
7	590373501	LATCH -	1	-
8	590506802	PLATE -	1	-
9	590507201	ROD -	1	-
10	539113952	SPRING -	2	-
11	582478101	NUT -	4	-
12	532192749	SWITCH -	1	-
13	539108392	HCS 5/16-18 X 5/8 GR 5 ZD -	4	-
14	582478901	SCREW -	2	-
15	582478501	SCREW -	2	-
16	539990316	BOLT -	8	-

Ref.	Article N.	Description	Qty	Kit
17	582478601	NUT -	2	-
18	539913847	BOLT -	1	-
19	539112899	NUT, 5/16-18, NYLOC -	6	-
20	522023401	WASHER -	2	-
21	532413524	WASHER -	8	-
22	539990118	WASHER -	2	-
23	539990187	WASHER -	4	-
24	579866109	SEAT ASSY *Knob*	1	-
25	579866108	SEAT ASSY *REPLACEMENT PAD ONLY*	2	-
1	580942201	HUB -	3	-
2	580942101	SHAFT -	3	-
3	580942701	V-RING -	6	-
4	580942601	SEAL -	6	-
5	583911101	BEARING KIT *ALSO ORDER TOOL KIT*	3	-
6	580942301	SPACER -	3	-
7	580942501	CARRIER -	3	-
8	539976998	NIPPLE -	3	-
9	539977326	FITTING -	3	-
10	539130653	NUT -	3	-
11	580943306	SPINDLE -	3	-
12	580942801	SHIM *For 967678601-00, 967678701-00*	1	-
13	574754201	KIT	1	-

Ref.	Article N.	Description	Qty	Kit
		NOT SHOWN		
1	582475501	LEVER *LEFT*	1	-
2	582475502	LEVER *RIGHT*	1	-
3	596925601	ROD *RIGHT SIDE ASSY*	1	-
3	596925701	ROD *LEFT SIDE ASSY*	1	-
3	598852501	SERVICE KIT *COUPLER KIT. CONTAINS (2) COUPLERS THAT FITS BOTH LH/RH SIDES. REF # 4 SCREWS INTO THIS COUPLER*	1	-
4	588692502	ROD *ROD.END.MALE.LH THREAD*	2	-
5	579764601	JOINT *JOINT.RH.THREAD.FEMALE.5/16*	2	-
6	539923515	SPACER	2	-
7	597744702	BRACKET	2	-
8	592653801	CARRIER *w/BEARINGS LEFT*	1	-
8	592653802	CARRIER *w/BEARINGS RIGHT*	1	-
9	592653901	CARRIER	2	-
12	582477802	BRACKET *LEFT*	1	-
12	582477804	BRACKET *RIGHT*	1	-
13	582476902	BRACKET	2	-
14	582475102	BRACKET	4	-
15	587225301	PIN	2	-
16	582551901	CLIP	2	-
17	588775401	DAMPER	2	-
18	582477401	PIN	2	-
19	589505102	PIVOT	2	-
20	589489601	RETAINER	2	-
21	589500902	SWITCH	2	-
22	582475001	SPACER	2	-
23	582711303	SPACER	2	-
24	582477001	SPRING	4	-
25	532151332	SPRING	2	-
26	582477702	SPRING	2	-

Ref.	Article N.	Description	Qty	Kit
27	597744501	ADAPTER	2	-
28	582477501	CABLE	2	-
29	539110607	STUD	4	-
30	582477602	BRACKET	2	-
31	582476801	BEARING	4	-
32	539131518	BEARING	8	-
33	532170165	BOLT	4	-
34	525544001	BOLT	4	-
35	525465402	SCREW	2	-
36	539976934	SCREW	4	-
37	582477102	SCREW	4	-
38	582476401	SCREW	4	-
39	596240801	BOLT	2	-
40	595901501	BOLT	4	-
41	577117701	SCREW	2	-
42	589505602	SCREW	2	-
44	594944401	NUT	14	-
45	596040901	HEXAGON NUT	4	-
46	521996502	NUT	6	-
47	539990184	NUT	4	-
48	596134901	WASHER	2	-
49	539990187	WASHER	4	-
50	596204101	WASHER	2	-
51	522023401	WASHER	4	-
1	582475501	LEVER -	1	-
2	582475502	LEVER -	1	-
3	501567001	ROD *For 967930101-00*	1	-
3	592653701	CONTROL *LEFT For 96767860300, 96767860200, 96767860101, 967678701. 967678601*	1	-
3	592653702	CONTROL *RIGHT*	1	-
4	588692502	ROD -	2	-
5	579764601	JOINT -	2	-
6	582484001	BELLOWS *For 967930101-00*	1	-

Ref.	Article N.	Description	Qty	Kit
6	591193301	SERVICE KIT *For 96767860300, 96767860200, 96767860101, 967678701-00, 967678601-00*	1	-
7	582484101	BELLOWS *For 967930101-00*	1	-
7	591193302	SERVICE KIT *For 96767860300, 96767860200, 96767860101, 967678701-00, 967678601-00*	1	-
8	592653801	CARRIER *w/BEARINGS LEFT/ For 96767860300, 96767860200, 96767860101, 967678701-00, 967678601-00*	1	-
8	592653802	CARRIER *w/BEARINGS LEFT/ For 967930101-00*	1	-
9	592653901	CARRIER -	2	-
10	592724002	CONTROL -	1	-
10	592724001	CONTROL -	1	-
11	592653501	PARKING BRAKE -	1	-
12	582477802	BRACKET *LEFT*	1	-
12	582477804	BRACKET *RIGHT*	1	-
13	582476901	BRACKET -	2	-
14	582475102	BRACKET -	4	-
15	587225301	PIN -	2	-
16	582551901	CLIP -	2	-
17	588775401	DAMPER -	2	-
18	582477401	PIN -	2	-
19	589505101	PIVOT -	2	-
20	589489601	RETAINER -	2	-
21	589500901	SWITCH -	2	-
22	582475001	SPACER -	2	-

Ref.	Article N.	Description	Qty	Kit
23	582711303	SPACER -	2	-
24	582477001	SPRING -	4	-
25	532151332	SPRING -	2	-
26	582477701	SPRING -	2	-
27	582477201	YOKE -	2	-
28	582477501	CABLE -	2	-
29	539110607	STUD -	4	-
30	582477601	BRACKET -	2	-
31	582476801	BEARING -	4	-
32	539131518	BEARING -	8	-
33	539110303	BOLT -	4	-
34	525544001	BOLT -	4	-
35	525465401	SCREW -	2	-
36	539976934	SCREW -	4	-
37	582477101	SCREW -	4	-
38	582476401	SCREW -	2	-
39	539115574	EYE BOLT -	2	-
40	539990208	SCREW -	4	-
41	577117701	SCREW -	6	-
42	589505601	SCREW -	2	-
43	582482901	RIVET -	12	-
44	539112899	NUT, 5/16-18, NYLOC	14	-

Ref.	Article N.	Description	Qty	Kit
		-		
45	539990223	NUT -	4	-
46	521996501	NUT -	6	-
47	539990184	NUT -	4	-
48	539990692	WASHER -	2	-
49	539990187	WASHER -	4	-
50	819111116	WASHER -	2	-
51	522023401	WASHER -	2	-
1	599893003	COVER -	1	-
2	599893004	COVER -	1	-
3	596564002	BOLT -	4	-
1	599156701	TIRE *fits 967669801-00, 967699802-00*	2	-
1	510154601	TIRE *Use From SN: 060117F000001 To SN: 090820F999999*	2	-
2	539105152	TIRE *24x12-12 Tire Only*	2	-
2	510154502	WHEEL RIM *Rim Only*	2	-
2	510154501	TIRE *Tire & Rim Assembly*	2	-
3	525611902	FORK -	2	-
4	510034001	CAP -	2	-
5	510034301	SEAL -	2	-
6	510034403	BEARING -	4	-
7	596623501	VALVE -	2	-
8	590690701	SPACER *Use From SN: 060117F000001 To SN: 090820F999999*	4	-

Ref.	Article N.	Description	Qty	Kit
9	590704902	SPACER *Use From SN: 060117F000001 To SN: 090820F999999*	2	-
10	594946501	BOLT -	2	-
11	522842602	NUT -	2	-
12	587653902	NUT -	8	-
13	873930800	NUT *For 967678802-01, 967678801-01*	2	-
13	521991102	NUT *For 96793040300, 967669703-01*	2	-
14	595086801	WASHER -	2	-
15	574824701	WASHER -	2	-
16	539102484	BEARING *Use after SN: 090920F000001*	4	-
17	539105307	ROLLER BEARING *Use after SN: 090920F000001*	4	-
18	539912234	VALVE *Use after SN: 090920F000001*	2	-
19	599405101	SHIM *Use after SN: 090920F000001*	2	-
20	539133007	WASHER *Use after SN: 090920F000001*	2	-
21	539105522	TIRE *13X6.5-6 Tire Only Use After SN: 090920F000001*	2	-
21	581199501	WHEEL ASSY *Use after SN: 090920F000001*	2	-
22	575334901	SPACER *Use after SN: 090920F000001*	2	-
23	596623501	VALVE -	2	-
24	597383801	SERVICE KIT *Use From SN: 060117F000001 To SN: 090820F999999*	2	-
1	597383801	SERVICE KIT -	1	-
1	510154601	TIRE -	2	-
2	522905101	TIRE -	2	-
3	525611902	FORK	2	-

Ref.	Article N.	Description	Qty	Kit
		-		
4	510034001	CAP -	2	-
4	522905102	TIRE -	2	-
5	510034301	SEAL -	2	-
6	510034403	BEARING -	4	-
7	539101474	NIPPLE -	2	-
8	590690701	SPACER -	4	-
9	590704901	SPACER -	2	-
10	539105517	BOLT -	2	-
11	522842601	NUT -	2	-
12	587653902	NUT -	8	-
13	873930800	NUT -	2	-
14	539990250	WASHER -	2	-
15	574824701	WASHER -	2	-
1	591359801	FRAME *w/ SAFETY DECALS*	1	-
2	522675702	BUMPER -	1	-
3	587898002	GUARD -	1	-
4	589808802	BRACKET -	2	-
5	589807202	BRACKET -	1	-
6	589448202	BRACKET -	1	-
7	589448204	BRACKET -	1	-
8	582481101	BRACKET -	2	-

Ref.	Article N.	Description	Qty	Kit
9	582481002	PANEL *For 96767860300, 96767860200, 96767860101, 967678701-00, 967678601-00*	1	-
9	595327502	PANEL *For 967930101-00*	1	-
10	582481004	PANEL -	1	-
11	582480803	PANEL -	1	-
12	582480804	PANEL -	1	-
13	589304602	PLATE -	1	-
14	574228602	PLATE *For 96767860300, 96767860200, 96767860101, 967678701-00, 967678601-00*	1	-
14	596694102	PLATE *For 967930101-00*	1	-
15	582478701	BUMPER -	2	-
16	575811501	BUMPER -	2	-
17	522801401	BUMPER -	4	-
18	539102587	ABSORBER -	2	-
19	589745202	COVER -	1	-
20	582480502	CROSS MEMBER -	1	-
21	589744001	ISOLATOR -	2	-
22	539104411	KNOB -	1	-
23	591344501	KNOB -	2	-
24	591101701	PIN -	2	-
25	591101601	PIN -	2	-
26	582460702	PLATE -	1	-
27	582460606	BRACKET *MX-14*	1	-
28	589500701	BRACKET	1	-

Ref.	Article N.	Description	Qty	Kit
		-		
29	539104763	CLIP -	7	-
30	589806801	NUT -	2	-
31	539111028	NUTSERT 5/16-18 THICK GRIP -	2	-
32	525612801	SCREW -	4	-
33	574233801	SCREW -	2	-
34	525544001	BOLT -	2	-
35	539113226	BOLT -	4	-
36	577117701	SCREW -	4	-
37	539100145	BOLT -	2	-
38	872140404	BOLT -	4	-
39	872140406	BOLT *For 96767860300, 96767860200, 96767860101, 967678701-00, 967678601-00*	2	-
39	539115620	1/4-20X3/4 CARR BLT *For 967930101-00*	2	-
40	539990316	BOLT -	14	-
41	539990208	SCREW -	2	-
42	539110303	BOLT -	4	-
43	580754601	BOLT -	6	-
44	589797201	SCREW -	2	-
45	817490408	SCREW -	2	-
46	585986101	BOLT -	2	-
47	525829101	NUT -	6	-
48	539976978	NUT -	6	-

Ref.	Article N.	Description	Qty	Kit
49	521996501	NUT -	12	-
50	539112899	NUT, 5/16-18, NYLOC -	21	-
51	539102653	WASHER -	4	-
52	539108120	NUT *For 967930101-00*	1	-
53	583611601	BOLT *For 967930101-00*	1	-
54	591176601	BOLT *For 967930101-00*	1	-
58	590877803	ROPS *ROPS ASSY*	1	-

FRAME

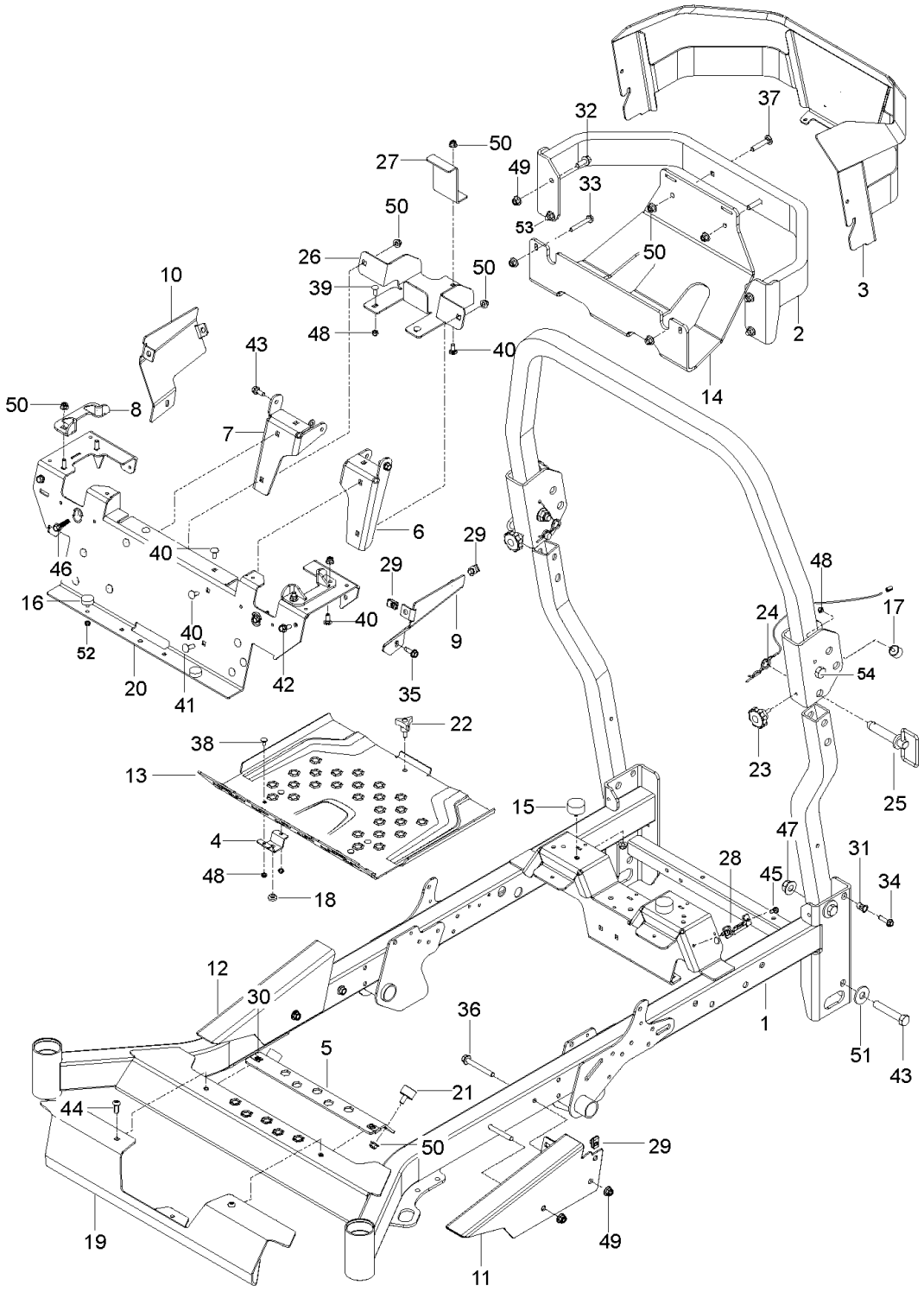

Ref.	Article N.	Description	Qty	Kit
1	582483902	PANEL	1	-
2	582483602	PANEL	1	-
3	586161801	HOUR METER	1	-
4	574455401	SWITCH	1	-
5	589887201	SWITCH	1	-

Ref.	Article N.	Description	Qty	Kit
6	574455501	KEY	1	-
7	581878301	LIGHT *For 967930101-00, 967678701-00*	1	-
7	574206901	CABLE *CHOKE/ For 96767860300, 96767860200, 96767860101*	1	-
8	582120301	THROTTLE CONTROL *46*	1	-
9	589819501	BATTERY *MX-9/ For 967930101-00, 967678701-00, 967678601-00*	1	-
9	589819502	BATTERY *MX-12/ For 967930101-00, 967678701-00, 967678601-00*	1	-
9	589819503	BATTERY *MX-14/ For 96767860300, 96767860200, 96767860101*	1	-
9	582460606	BRACKET *MX-14*	1	-
9	596990201	SERVICE KIT *MX-12 Bracket (Battery not included) For 967930101-00, 967678701-00, 967678601-00*	1	-
10	539103178	NUT CAP	1	-
11	539132624	KNOB	1	-
12	539102759	INSULATOR	2	-
13	592872701	FUEL GAUGE	2	-
14	539114341	SCREW	6	-
15	532199855	SCREW	2	-
16	582460801	SCREW	2	-
21	593777801	HARNESS *FOR CARB ENGINES*	1	-
21	593777803	HARNESS *FOR KOHLER & YAMAHA EFI*	1	-
22	589838501	HARNESS	1	-
23	574514001	TIMER *NOT SHOWN*	1	-
24	590632101	CABLE *NOT SHOWN*	1	-
25	539101714	SOLENOID *NOT SHOWN (SOLENOID KAW FX)*	1	-
1	574437301	DECAL *BELT ROUTING*	1	-
2	590209401	DECAL *MOTION/BRAKE RIGHT*	1	-
3	590209501	DECAL *MOTION_BRAKE_LEFT*	1	-

Ref.	Article N.	Description	Qty	Kit
3	590807601	DECAL *Z554X*	1	-
4	581724301	DECAL *NO STEP*	2	-
5	539105745	DECAL *BATTERY WARNING*	1	-
6	539105744	DECAL *DANGER BELT*	2	-
7	581724401	DECAL *DEFLECTOR WARNING*	1	-
8	532424102	DECAL *SPARK ARRESTOR*	1	-
9	574455001	DECAL *CROWN LARGE*	1	-
10	574569006	DECAL *ROPS/ For 96767860300, 96767860200,*	1	-
10	593011101	DECAL *ROPS/ For 967930101-00, 967678701-00, 967678601-00*	1	-
11	574569002	DECAL *ROPS WARNING*	1	-
12	574569401	DECAL *FUSE*	1	-
13	584904601	DECAL *DECK/DEFLECT WARNING*	1	-
14	532428676	DECAL *CROWN SMALL*	1	-
15	590799301	DECAL *DECK HEIGHT*	1	-
16	590210001	DECAL *COMMERCIAL*	1	-
17	590846801	DECAL *MAINTANCE/SERVICE*	1	-
18	590210301	DECAL *CONTROL PANEL RIGHT - CHOKE /For 96767860300, 96767860200, 96767860101*	1	-
18	590210302	DECAL *CONTROL PANEL RIGHT-EFI/ For 967930101-00, 967678701-00, 967678601-00*	1	-
19	590210501	DECAL *CONTROL PANEL LEFT*	1	-
20	590209701	DECAL *TRANSMISSION WARNING*	1	-
21	590209202	DECAL	1	-

Ref.	Article N.	Description	Qty	Kit
		START W/ CHOKE		
22	577469001	DECAL *EMBLEM*	2	-
30	577150101	DECAL *FUEL - NOT SHOWN*	1	-
31	590807801	DECAL *Z560X / For 967678601-00, 967678701-00*	1	-
32	590807901	DECAL *Z572X / For 967678601-00, 967678701-00*	1	-
1	582733302	PLATE -	1	-
2	525749501	CLUTCH -	1	-
3	522676702	STOP -	1	-
4	539118911	NIPPLE -	1	-
5	522837001	PLUG -	1	-
6	510019801	PULLEY -	1	-
7	539119680	ADAPTER -	1	-
8	539105072	90DEG.ELBOW 3/8NPT -	1	-
9	525749901	KEY -	1	-
10	587886001	MUFFLER -	1	-
11	539109618	O-RING -	1	-
12	505280001	TIE WRAP -	1	-
13	581332801	BOLT -	1	-
14	574233801	SCREW -	4	-
15	539990563	SCREW -	4	-
16	874780716	BOLT -	1	-
17	539990208	SCREW -	2	-

Ref.	Article N.	Description	Qty	Kit
18	539102933	SCREW -	2	-
19	539108120	NUT -	1	-
20	539112899	NUT, 5/16-18, NYLOC -	8	-
21	539102582	NUT -	1	-
22	539102593	WASHER -	4	-
23	539990247	WASHER -	1	-
24	539125626	WASHER -	1	-
25	586839701	GASKET *NOT SHOWN*	2	-
1	582483105	FUEL TANK ASSY *For 96767860300, 96767860200, 96767860101, 967678701-00, 967678601-00*	1	-
1	590680505	TANK UNIT ASSY *For 967930101-00*	1	-
2	582481705	FUEL TANK ASSY *For 96767860300, 96767860200, 96767860101, 967678701-00, 967678601-00*	1	-
2	590680405	TANK UNIT ASSY *For 967930101-00*	1	-
3	587044550	HOSE -	1	-
4	587044526	HOSE -	1	-
5	587044517	HOSE -	1	-
6	587044846	HOSE -	1	-
7	587044808	HOSE *For 967930101-00*	1	-
7	587044833	HOSE *For 96767860300, 96767860200, 96767860101, 967678701-00, 967678601-00*	1	-
8	587044824	HOSE -	1	-
9	574206602	FITTING -	1	-
10	575018101	CAP -	2	-
11	582483301	GUARD	1	-

Ref.	Article N.	Description	Qty	Kit
		-		
12	590638801	SENSOR -	2	-
13	576618101	TANK VENT -	2	-
14	539102679	VALVE -	1	-
15	582482301	GUARD -	1	-
15	525865402	TUBE ASSY -	1	-
16	532003645	BUSHING -	2	-
17	590209101	GROMMET -	2	-
18	584648201	GROMMET -	2	-
19	582481502	BRACKET -	2	-
20	582481602	BRACKET -	2	-
20	525865403	TUBE ASSY -	1	-
21	582483401	COVER -	1	-
22	539912222	CLAMP -	6	-
23	575436501	CLAMP -	6	-
24	582482601	CLIP -	8	-
25	505280001	TIE WRAP -	5	-
26	874490548	BOLT -	6	-
27	582482401	COVER -	1	-
27	590257301	SCREW -	6	-
28	817490516	SCREW -	6	-
29	582484201	SCREW -	8	-

Ref.	Article N.	Description	Qty	Kit
30	539112899	NUT, 5/16-18, NYLOC -	20	-
31	532126684	SHIM -	6	-
1	591359901	SHIELD -	1	-
2	582461206	BRACKET -	1	-
3	539102587	ABSORBER -	4	-
4	582461701	HOLDER ASSY -	3	-
5	582461303	ROD -	2	-
6	874780412	BOLT -	3	-
7	874490548	BOLT -	4	-
8	503200001	SCREW EHHFM -	3	-
9	587592101	SCREW -	4	-
10	521991101	NUT -	2	-
11	539112899	NUT, 5/16-18, NYLOC -	8	-
12	532191730	NUT -	3	-
13	731231405	HEXAGON NUT -	3	-
14	873350800	NUT -	2	-
1	582463102	ARM -	1	-
2	501603701	BEARING -	2	-
3	582479102	BRACKET -	4	-
4	582480101	CLAMP -	4	-
5	529311401	FITTING -	2	-
6	582479404	FRAME	1	-

Ref.	Article N.	Description	Qty	Kit
		-		
7	582480204	HOSE -	2	-
8	586933802	MOUNT -	1	-
9	582468101	SHAFT -	1	-
10	587654101	PULLEY -	2	-
11	582716201	ROD END -	1	-
12	582468401	SPRING -	1	-
13	574499201	TANK -	2	-
14	582480001	TRANSMISSION -	1	-
15	582480002	TRANSMISSION -	1	-
16	576127201	FILTER -	1	-
17	582480402	V-BELT -	1	-
18	874490652	SCREW -	1	-
19	574210601	SCREW -	8	-
20	525828901	BOLT *For 96767860300, 96767860200, 96767860101*	8	-
20	874490848	SCREW *For 967930101-00, 967678701-00, 967678601-00*	8	-
21	539100145	BOLT -	2	-
22	539990645	BOLT -	2	-
23	532165857	SCREW -	4	-
24	539913847	BOLT -	1	-
25	521991101	NUT -	8	-
26	521996501	NUT -	6	-

Ref.	Article N.	Description	Qty	Kit
27	819133210	WASHER -	1	-
1	591359704	CUTTING DECK -	1	-
2	588264805	DRIVE BELT -	1	-
3	575265901	BLADE -	3	-
4	582462702	ARM -	1	-
5	521979701	PULLEY -	3	-
6	510015101	PULLEY -	3	-
7	582463003	PULLEY -	1	-
8	582463006	PULLEY -	1	-
9	582468801	CHUTE -	1	-
10	510254501	SHIELD -	3	-
11	574169601	ROLLER -	4	-
12	574196401	TUBE -	2	-
13	574196501	TUBE -	1	-
14	539131518	BEARING -	2	-
15	510263701	BEARING -	2	-
16	582467302	BRACKET -	1	-
17	582463203	BRACKET *For 96767860300, 96767860200, 96767860101, 967678701-00, 967678601-00*	1	-
17	582463207	BRACKET *For 967930101-00*	1	-
18	582463204	BRACKET *For 96767860300, 96767860200, 96767860101, 967678701-00, 967678601-00*	1	-
18	582463208	BRACKET *For 967930101-00*	1	-
19	582472502	BELT GUARD	1	-

Ref.	Article N.	Description	Qty	Kit
		For 96767860300, 96767860200, 96767860101, 967678701-00, 967678601-00		
19	594913302	BELT GUIDE *For 967930101-00*	1	-
20	582470201	KEEPER -	1	-
21	539104411	KNOB -	2	-
22	590523702	PLATE -	1	-
23	582466401	PLATE -	1	-
24	582468101	SHAFT -	1	-
25	582468301	SPACER -	1	-
26	589455201	SPACER -	1	-
27	582468001	SPRING -	1	-
28	510437502	BAFFLE -	1	-
29	539104763	CLIP -	2	-
30	539115620	1/4-20X3/4 CARR BLT -	4	-
31	872140610	BOLT -	3	-
32	510022301	SCREW -	2	-
33	872140628	BOLT -	2	-
34	872140864	BOLT -	1	-
35	874490644	BOLT -	2	-
36	574210601	SCREW -	18	-
37	525612801	SCREW -	2	-
38	521996601	SCREW -	1	-
39	582476401	SCREW -	4	-

Ref.	Article N.	Description	Qty	Kit
40	539130315	BOLT -	9	-
41	539119007	SCREW -	3	-
42	574202001	BOLT -	1	-
43	539913847	BOLT -	1	-
44	521996501	NUT -	10	-
45	539112899	NUT, 5/16-18, NYLOC -	4	-
46	521991101	NUT -	3	-
47	539109332	NUT -	1	-
48	539976978	NUT -	4	-
49	539106504	WASHER -	2	-
50	539109600	WASHER -	9	-
1	582462602	SHAFT -	1	-
2	592654001	ARM -	1	-
2	592654002	ARM -	1	-
3	582465402	ARM -	2	-
4	582463902	ARM -	2	-
5	582462001	ARM -	1	-
6	582462002	ARM -	1	-
7	582464601	ROD -	2	-
8	582472801	ROD -	1	-
9	582471401	ROD -	1	-
10	510408301	PEDAL	1	-

Ref.	Article N.	Description	Qty	Kit
		-		
11	510089501	PAD -	1	-
12	510023902	BLOCK -	4	-
13	582467201	BLOCK -	1	-
14	582466902	BRACKET -	1	-
15	582468902	BRACKET -	2	-
16	589454103	LEVER -	1	-
17	592654101	LEVER -	1	-
18	539109693	LIFT CHAIN - 3 LINK -	2	-
18	589454104	LEVER -	1	-
19	539102641	CHAIN -	2	-
20	582464801	PIVOT -	2	-
21	582763902	PLATE -	1	-
22	589453201	LEVER ASSY -	1	-
23	582469001	SHACKLE -	2	-
24	582464201	SHAFT -	2	-
25	593091801	SPRING -	2	-
26	582471301	SPRING -	1	-
27	582467001	SWIVEL -	1	-
28	582467101	SWIVEL -	1	-
29	582469901	BUSHING -	2	-
30	582469801	BUSHING -	2	-

Ref.	Article N.	Description	Qty	Kit
31	510089201	BUSHING -	5	-
32	539912730	RING -	1	-
33	539990870	RING -	2	-
34	590465501	PIN -	1	-
35	539102889	SPLIT PIN -	2	-
36	582466701	SCREW -	4	-
37	582472601	SCREW -	2	-
38	574202001	BOLT -	2	-
39	539990580	SCREW -	1	-
40	589786001	SCREW -	4	-
41	501064102	SCREW -	3	-
42	501064101	SCREW -	4	-
43	510408201	BOLT -	1	-
44	539101175	SCREW -	4	-
45	582465601	SCREW -	2	-
46	589677701	NUT -	3	-
47	539976978	NUT -	1	-
48	539990546	NUT -	2	-
49	539119124	NUT -	4	-
50	539110340	NUT -	3	-
51	521996501	NUT -	6	-
52	539112899	NUT, 5/16-18, NYLOC	2	-

Ref.	Article N.	Description	Qty	Kit
		-		
53	539132019	NUT -	4	-
54	582466601	NUT -	4	-
55	539108732	NUT 3/8-24 HEX JAM ZD -	2	-
56	539991043	BUSHING -	2	-
1	579866104	SEAT ASSY -	1	-
1	582460103	SEAT *Fits 97058500100*	1	-
2	582478801	BAR -	1	-
3	582478201	BRACKET -	2	-
4	590555002	BRACKET -	1	-
5	590481801	ISOLATOR -	8	-
6	539116377	INSERT -	4	-
7	590373501	LATCH -	1	-
8	590506802	PLATE -	1	-
9	590507201	ROD -	1	-
10	539113952	SPRING -	2	-
11	582478101	NUT -	4	-
12	532192749	SWITCH -	1	-
13	539108392	HCS 5/16-18 X 5/8 GR 5 ZD -	4	-
14	582478901	SCREW -	2	-
15	582478501	SCREW -	2	-
16	539990316	BOLT -	8	-

Ref.	Article N.	Description	Qty	Kit
17	582478601	NUT -	2	-
18	539913847	BOLT -	1	-
19	539112899	NUT, 5/16-18, NYLOC -	6	-
20	522023401	WASHER -	2	-
21	532413524	WASHER -	8	-
22	539990118	WASHER -	2	-
23	539990187	WASHER -	4	-
24	579866109	SEAT ASSY *Knob*	1	-
25	579866108	SEAT ASSY *REPLACEMENT PAD ONLY*	2	-
1	580942201	HUB -	3	-
2	580942101	SHAFT -	3	-
3	580942701	V-RING -	6	-
4	580942601	SEAL -	6	-
5	583911101	BEARING KIT *ALSO ORDER TOOL KIT*	3	-
6	580942301	SPACER -	3	-
7	580942501	CARRIER -	3	-
8	539976998	NIPPLE -	3	-
9	539977326	FITTING -	3	-
10	539130653	NUT -	3	-
11	580943306	SPINDLE -	3	-
12	580942801	SHIM *For 967678601-00, 967678701-00*	1	-
13	574754201	KIT	1	-

Ref.	Article N.	Description	Qty	Kit
		NOT SHOWN		
1	582475501	LEVER *LEFT*	1	-
2	582475502	LEVER *RIGHT*	1	-
3	596925601	ROD *RIGHT SIDE ASSY*	1	-
3	596925701	ROD *LEFT SIDE ASSY*	1	-
3	598852501	SERVICE KIT *COUPLER KIT. CONTAINS (2) COUPLERS THAT FITS BOTH LH/RH SIDES. REF # 4 SCREWS INTO THIS COUPLER*	1	-
4	588692502	ROD *ROD.END.MALE.LH THREAD*	2	-
5	579764601	JOINT *JOINT.RH.THREAD.FEMALE.5/16*	2	-
6	539923515	SPACER	2	-
7	597744702	BRACKET	2	-
8	592653801	CARRIER *w/BEARINGS LEFT*	1	-
8	592653802	CARRIER *w/BEARINGS RIGHT*	1	-
9	592653901	CARRIER	2	-
12	582477802	BRACKET *LEFT*	1	-
12	582477804	BRACKET *RIGHT*	1	-
13	582476902	BRACKET	2	-
14	582475102	BRACKET	4	-
15	587225301	PIN	2	-
16	582551901	CLIP	2	-
17	588775401	DAMPER	2	-
18	582477401	PIN	2	-
19	589505102	PIVOT	2	-
20	589489601	RETAINER	2	-
21	589500902	SWITCH	2	-
22	582475001	SPACER	2	-
23	582711303	SPACER	2	-
24	582477001	SPRING	4	-
25	532151332	SPRING	2	-
26	582477702	SPRING	2	-

Ref.	Article N.	Description	Qty	Kit
27	597744501	ADAPTER	2	-
28	582477501	CABLE	2	-
29	539110607	STUD	4	-
30	582477602	BRACKET	2	-
31	582476801	BEARING	4	-
32	539131518	BEARING	8	-
33	532170165	BOLT	4	-
34	525544001	BOLT	4	-
35	525465402	SCREW	2	-
36	539976934	SCREW	4	-
37	582477102	SCREW	4	-
38	582476401	SCREW	4	-
39	596240801	BOLT	2	-
40	595901501	BOLT	4	-
41	577117701	SCREW	2	-
42	589505602	SCREW	2	-
44	594944401	NUT	14	-
45	596040901	HEXAGON NUT	4	-
46	521996502	NUT	6	-
47	539990184	NUT	4	-
48	596134901	WASHER	2	-
49	539990187	WASHER	4	-
50	596204101	WASHER	2	-
51	522023401	WASHER	4	-
1	582475501	LEVER -	1	-
2	582475502	LEVER -	1	-
3	501567001	ROD *For 967930101-00*	1	-
3	592653701	CONTROL *LEFT For 96767860300, 96767860200, 96767860101, 967678701. 967678601*	1	-
3	592653702	CONTROL *RIGHT*	1	-
4	588692502	ROD -	2	-
5	579764601	JOINT -	2	-
6	582484001	BELLOWS *For 967930101-00*	1	-

Ref.	Article N.	Description	Qty	Kit
6	591193301	SERVICE KIT *For 96767860300, 96767860200, 96767860101, 967678701-00, 967678601-00*	1	-
7	582484101	BELLOWS *For 967930101-00*	1	-
7	591193302	SERVICE KIT *For 96767860300, 96767860200, 96767860101, 967678701-00, 967678601-00*	1	-
8	592653801	CARRIER *w/BEARINGS LEFT/ For 96767860300, 96767860200, 96767860101, 967678701-00, 967678601-00*	1	-
8	592653802	CARRIER *w/BEARINGS LEFT/ For 967930101-00*	1	-
9	592653901	CARRIER -	2	-
10	592724002	CONTROL -	1	-
10	592724001	CONTROL -	1	-
11	592653501	PARKING BRAKE -	1	-
12	582477802	BRACKET *LEFT*	1	-
12	582477804	BRACKET *RIGHT*	1	-
13	582476901	BRACKET -	2	-
14	582475102	BRACKET -	4	-
15	587225301	PIN -	2	-
16	582551901	CLIP -	2	-
17	588775401	DAMPER -	2	-
18	582477401	PIN -	2	-
19	589505101	PIVOT -	2	-
20	589489601	RETAINER -	2	-
21	589500901	SWITCH -	2	-
22	582475001	SPACER -	2	-

Ref.	Article N.	Description	Qty	Kit
23	582711303	SPACER -	2	-
24	582477001	SPRING -	4	-
25	532151332	SPRING -	2	-
26	582477701	SPRING -	2	-
27	582477201	YOKE -	2	-
28	582477501	CABLE -	2	-
29	539110607	STUD -	4	-
30	582477601	BRACKET -	2	-
31	582476801	BEARING -	4	-
32	539131518	BEARING -	8	-
33	539110303	BOLT -	4	-
34	525544001	BOLT -	4	-
35	525465401	SCREW -	2	-
36	539976934	SCREW -	4	-
37	582477101	SCREW -	4	-
38	582476401	SCREW -	2	-
39	539115574	EYE BOLT -	2	-
40	539990208	SCREW -	4	-
41	577117701	SCREW -	6	-
42	589505601	SCREW -	2	-
43	582482901	RIVET -	12	-
44	539112899	NUT, 5/16-18, NYLOC	14	-

Ref.	Article N.	Description	Qty	Kit
		-		
45	539990223	NUT -	4	-
46	521996501	NUT -	6	-
47	539990184	NUT -	4	-
48	539990692	WASHER -	2	-
49	539990187	WASHER -	4	-
50	819111116	WASHER -	2	-
51	522023401	WASHER -	2	-
1	599893003	COVER -	1	-
2	599893004	COVER -	1	-
3	596564002	BOLT -	4	-
1	599156701	TIRE *fits 967669801-00, 967699802-00*	2	-
1	510154601	TIRE *Use From SN: 060117F000001 To SN: 090820F999999*	2	-
2	539105152	TIRE *24x12-12 Tire Only*	2	-
2	510154502	WHEEL RIM *Rim Only*	2	-
2	510154501	TIRE *Tire & Rim Assembly*	2	-
3	525611902	FORK -	2	-
4	510034001	CAP -	2	-
5	510034301	SEAL -	2	-
6	510034403	BEARING -	4	-
7	596623501	VALVE -	2	-
8	590690701	SPACER *Use From SN: 060117F000001 To SN: 090820F999999*	4	-

Ref.	Article N.	Description	Qty	Kit
9	590704902	SPACER *Use From SN: 060117F000001 To SN: 090820F999999*	2	-
10	594946501	BOLT -	2	-
11	522842602	NUT -	2	-
12	587653902	NUT -	8	-
13	873930800	NUT *For 967678802-01, 967678801-01*	2	-
13	521991102	NUT *For 96793040300, 967669703-01*	2	-
14	595086801	WASHER -	2	-
15	574824701	WASHER -	2	-
16	539102484	BEARING *Use after SN: 090920F000001*	4	-
17	539105307	ROLLER BEARING *Use after SN: 090920F000001*	4	-
18	539912234	VALVE *Use after SN: 090920F000001*	2	-
19	599405101	SHIM *Use after SN: 090920F000001*	2	-
20	539133007	WASHER *Use after SN: 090920F000001*	2	-
21	539105522	TIRE *13X6.5-6 Tire Only Use After SN: 090920F000001*	2	-
21	581199501	WHEEL ASSY *Use after SN: 090920F000001*	2	-
22	575334901	SPACER *Use after SN: 090920F000001*	2	-
23	596623501	VALVE -	2	-
24	597383801	SERVICE KIT *Use From SN: 060117F000001 To SN: 090820F999999*	2	-
1	597383801	SERVICE KIT -	1	-
1	510154601	TIRE -	2	-
2	522905101	TIRE -	2	-
3	525611902	FORK	2	-

Ref.	Article N.	Description	Qty	Kit
		-		
4	510034001	CAP -	2	-
4	522905102	TIRE -	2	-
5	510034301	SEAL -	2	-
6	510034403	BEARING -	4	-
7	539101474	NIPPLE -	2	-
8	590690701	SPACER -	4	-
9	590704901	SPACER -	2	-
10	539105517	BOLT -	2	-
11	522842601	NUT -	2	-
12	587653902	NUT -	8	-
13	873930800	NUT -	2	-
14	539990250	WASHER -	2	-
15	574824701	WASHER -	2	-
1	591359801	FRAME *w/ SAFETY DECALS*	1	-
2	522675702	BUMPER -	1	-
3	587898002	GUARD -	1	-
4	589808802	BRACKET -	2	-
5	589807202	BRACKET -	1	-
6	589448202	BRACKET -	1	-
7	589448204	BRACKET -	1	-
8	582481101	BRACKET -	2	-

Ref.	Article N.	Description	Qty	Kit
9	582481002	PANEL *For 96767860300, 96767860200, 96767860101, 967678701-00, 967678601-00*	1	-
9	595327502	PANEL *For 967930101-00*	1	-
10	582481004	PANEL -	1	-
11	582480803	PANEL -	1	-
12	582480804	PANEL -	1	-
13	589304602	PLATE -	1	-
14	574228602	PLATE *For 96767860300, 96767860200, 96767860101, 967678701-00, 967678601-00*	1	-
14	596694102	PLATE *For 967930101-00*	1	-
15	582478701	BUMPER -	2	-
16	575811501	BUMPER -	2	-
17	522801401	BUMPER -	4	-
18	539102587	ABSORBER -	2	-
19	589745202	COVER -	1	-
20	582480502	CROSS MEMBER -	1	-
21	589744001	ISOLATOR -	2	-
22	539104411	KNOB -	1	-
23	591344501	KNOB -	2	-
24	591101701	PIN -	2	-
25	591101601	PIN -	2	-
26	582460702	PLATE -	1	-
27	582460606	BRACKET *MX-14*	1	-
28	589500701	BRACKET	1	-

Ref.	Article N.	Description	Qty	Kit
		-		
29	539104763	CLIP -	7	-
30	589806801	NUT -	2	-
31	539111028	NUTSERT 5/16-18 THICK GRIP -	2	-
32	525612801	SCREW -	4	-
33	574233801	SCREW -	2	-
34	525544001	BOLT -	2	-
35	539113226	BOLT -	4	-
36	577117701	SCREW -	4	-
37	539100145	BOLT -	2	-
38	872140404	BOLT -	4	-
39	872140406	BOLT *For 96767860300, 96767860200, 96767860101, 967678701-00, 967678601-00*	2	-
39	539115620	1/4-20X3/4 CARR BLT *For 967930101-00*	2	-
40	539990316	BOLT -	14	-
41	539990208	SCREW -	2	-
42	539110303	BOLT -	4	-
43	580754601	BOLT -	6	-
44	589797201	SCREW -	2	-
45	817490408	SCREW -	2	-
46	585986101	BOLT -	2	-
47	525829101	NUT -	6	-
48	539976978	NUT -	6	-

Ref.	Article N.	Description	Qty	Kit
49	521996501	NUT -	12	-
50	539112899	NUT, 5/16-18, NYLOC -	21	-
51	539102653	WASHER -	4	-
52	539108120	NUT *For 967930101-00*	1	-
53	583611601	BOLT *For 967930101-00*	1	-
54	591176601	BOLT *For 967930101-00*	1	-
58	590877803	ROPS *ROPS ASSY*	1	-