MZ 54

SPARE PARTS LIST

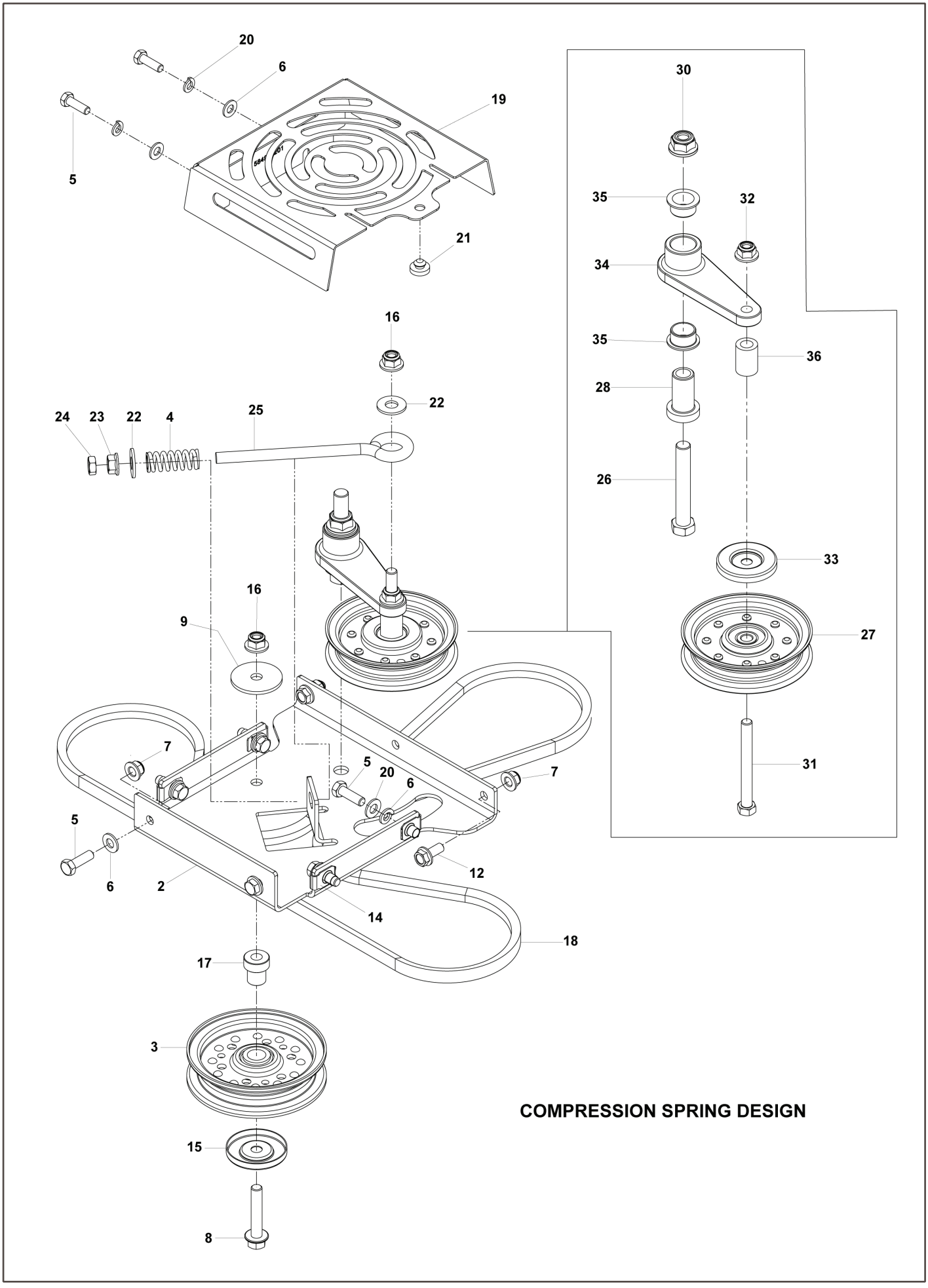

COMPRESSION SPRING DESIGN

REF.	PART NO.	DESCRIPTION	REMARK	QTY.	KIT
2	594077302	PLATE		1	
3	596739801	PULLEY		1	
4	532151332	SPRING		1	
5	596580801	BOLT		6	
6	596204101	WASHER		6	
7	594944401	NUT		4	
8	596319401	BOLT		1	
9	596917301	WASHER		1	
12	592858702	BOLT		2	
14	539104763	CLIP		4	
15	510254502	SHIELD		1	
16	521996502	NUT		2	
17	525435601	PIVOT		1	
18	574870901	BELT		1	
19	584994202	SHIELD		2	
20	596238801	WASHER		4	
21	539102587	ABSORBER		2	
22	596433701	WASHER		2	
23	596583501	WASHER		1	
24	596433501	NUT		1	
25	595893902	EYE BOLT		1	
26	596435301	BOLT		1	
27	596481401	PULLEY		1	
28	582538902	SPINDLE		1	
30	521991102	NUT		1	
31	596433901	SCREW		1	
32	521996502	NUT		1	
33	510254502	SHIELD		1	
34	594099101	ARM		1	
35	501603707	BEARING		2	
36	595306801	SPACER		1	

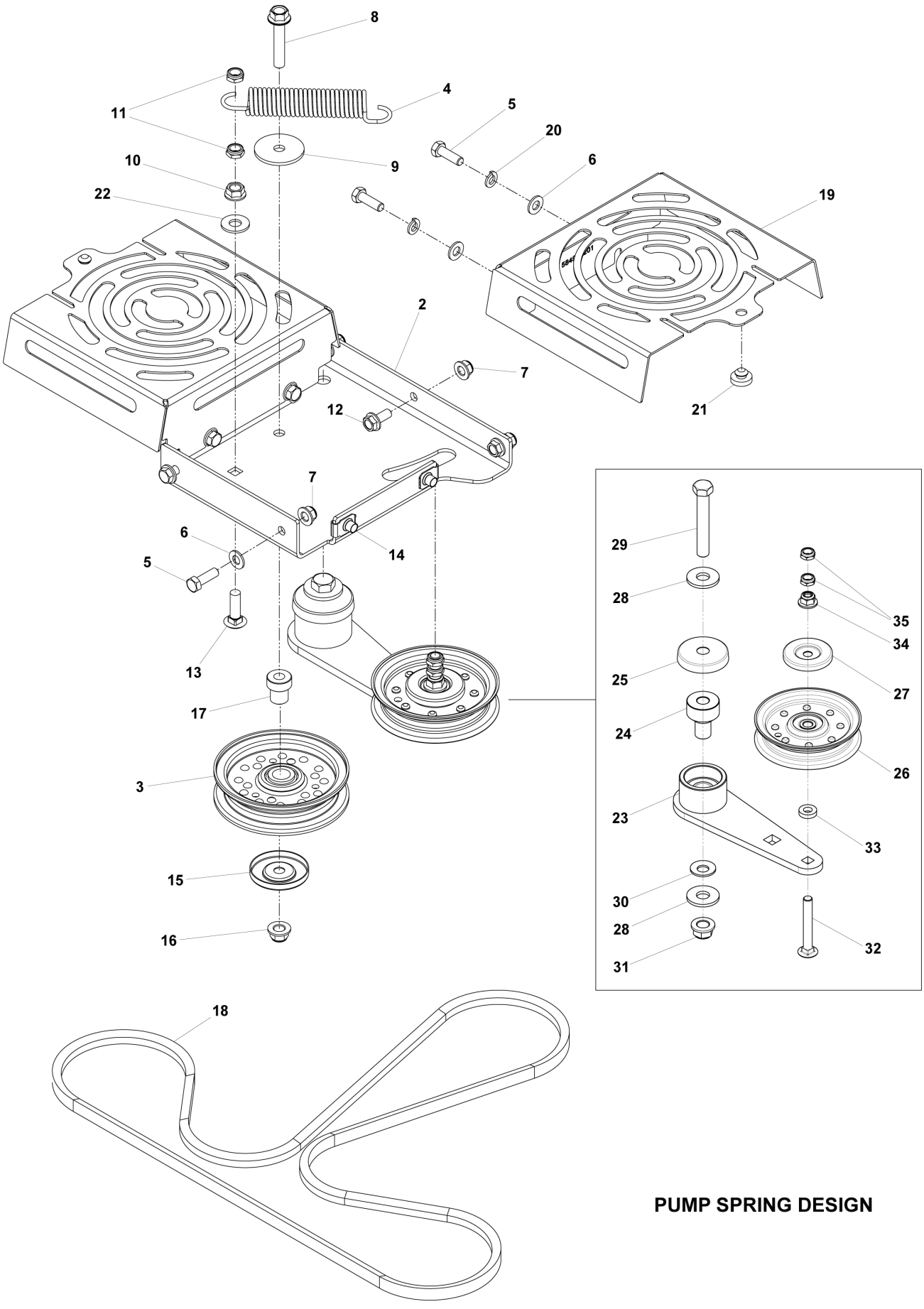

PUMP SPRING DESIGN

REF.	PART NO.	DESCRIPTION	REMARK	QTY.	KIT
2	586670402	PLATE		1	
3	596739801	PULLEY		1	
4	510254402	SPRING		1	
5	596580801	BOLT		6	
6	596204101	WASHER		6	
7	594944401	NUT		5	
8	596319401	BOLT		1	
9	596917301	WASHER		1	
10	596583501	WASHER		1	
11	596230801	NUT		2	
12	592858702	BOLT		3	
13	595901101	BOLT		1	
14	539104763	CLIP		4	
15	510254502	SHIELD		1	
16	521996502	NUT		1	
17	525435601	PIVOT		1	
18	574870901	BELT		1	
19	584994202	SHIELD		2	
20	596238801	WASHER		4	
21	539102587	ABSORBER		2	
22	596433701	WASHER		1	
23	510041603	ARM		1	
24	510206301	PIVOT		1	
25	539114662	SHIELD, DUST		1	
26	539107620	PULLEY		1	
27	510254501	SHIELD		1	
28	819182212	WASHER		2	
29	874780852	BOLT		1	
30	539115528	1/2` CONTACT BELLSPR		1	
31	521991101	NUT		1	
32	539130235	RHSNB 3/8–16 X 2.75 GR5 ZD		1	
33	539109562	WASHER		1	
34	521996501	NUT		1	
35	539200282	NUT		1	

For 97045580100

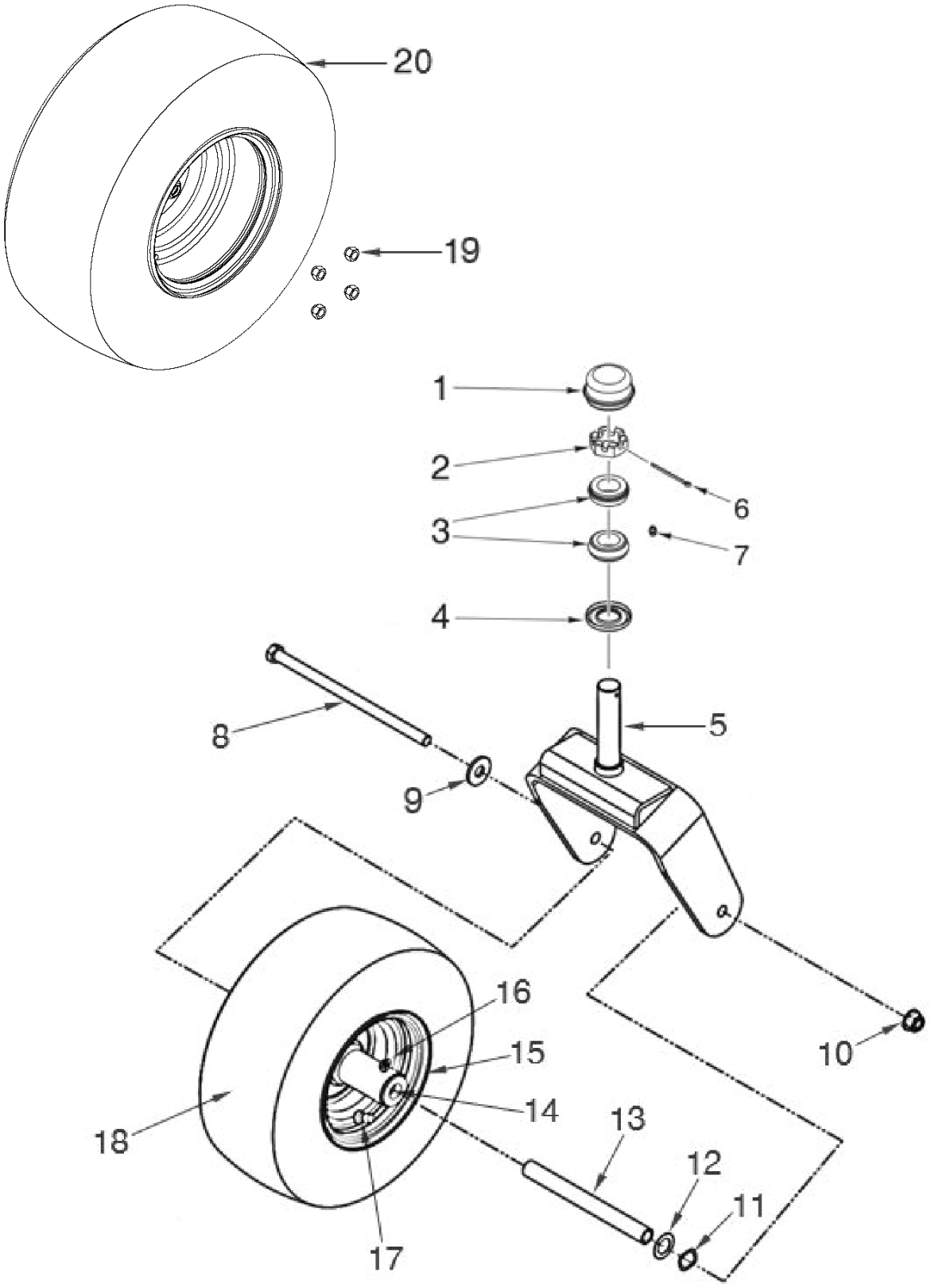

REF.	PART NO.	DESCRIPTION	REMARK	QTY.	KIT
1	595281301	CAP		2	
2	596241501	NUT		2	
3	539102543	BEARING		4	
4	539102851	SEALING		2	
5	586921902	FORK		2	
6	595528801	PIN		2	
7	596623501	VALVE		2	
8	594946501	BOLT		2	
9	595316401	WASHER		2	
10	521991102	NUT		2	
11	539133007	WASHER		2	
12	599405101	SHIM		2	
13	575334901	SPACER		2	
14	539102484	BEARING		4	
14	539105307	ROLLER BEARING		4	
15	581199501	WHEEL ASSY		2	
16	539103300	NIPPLE		2	
17	539912234	VALVE		2	
18	539105522	TIRE	SERVICE PART	2	
19	587653902	NUT		1	
20	580747001	TIRE		1	

For all EXCEPT 97045580100

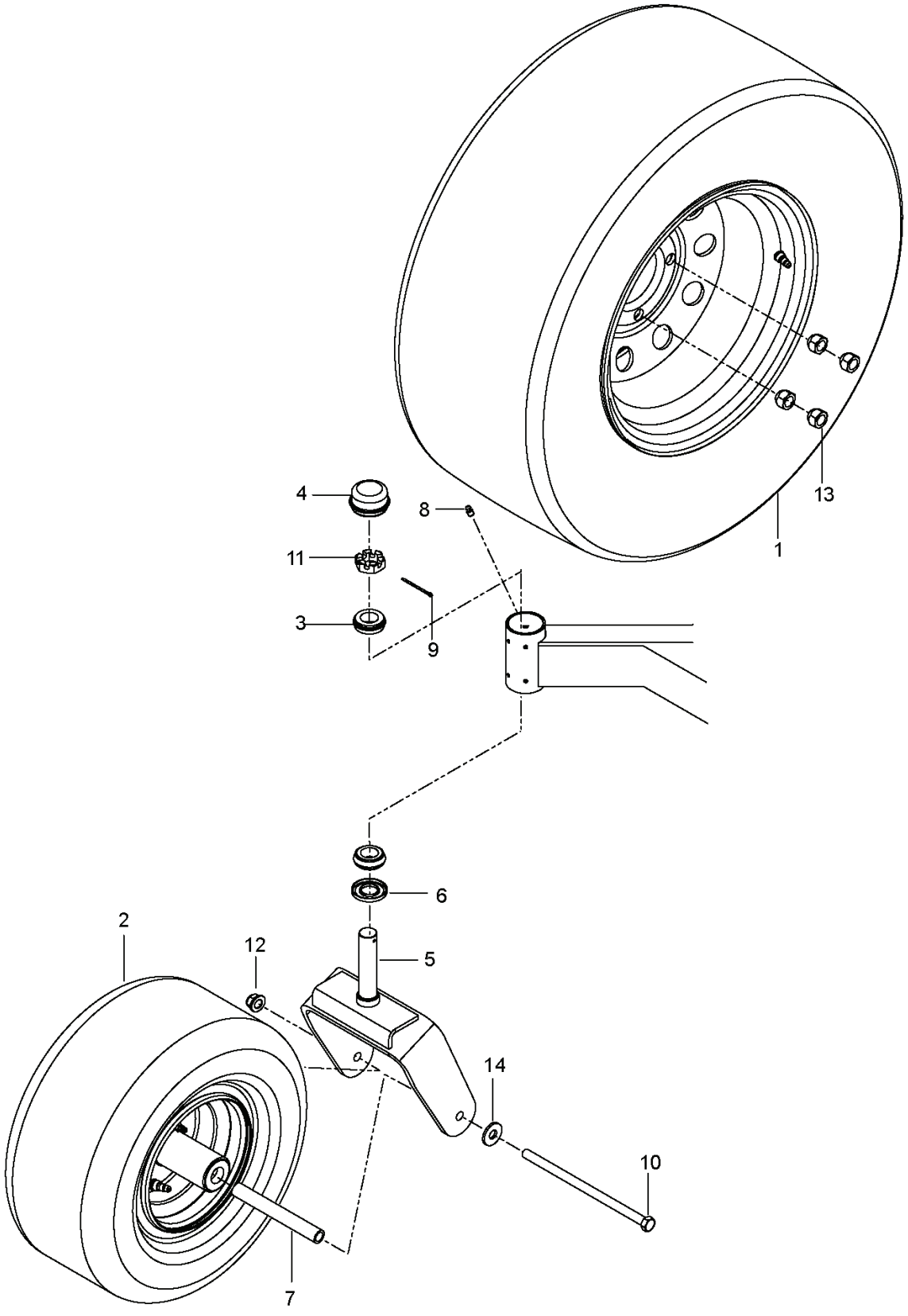

REF.	PART NO.	DESCRIPTION	REMARK	QTY.	KIT
1	580747001	TIRE		2	
	582746301	TIRE	For all EXCEPT 96795370100	2	
2	581199501	WHEEL ASSY		2	
3	539102543	BEARING		4	
4	539102535	CAP		2	
5	586921902	FORK		2	
6	539102851	SEALING		2	
7	575334901	SPACER		2	
8	539101474	NIPPLE		2	
9	539102889	SPLIT PIN		2	
10	539105517	BOLT		2	
11	539102852	NUT		2	
12	873800800	NUT	For all EXCEPT 96795370100, 967953702-00	2	
12	521991101	NUT	For 96795370100, 967953702-00	2	
13	587653902	NUT		8	
14	819182212	WASHER		2	

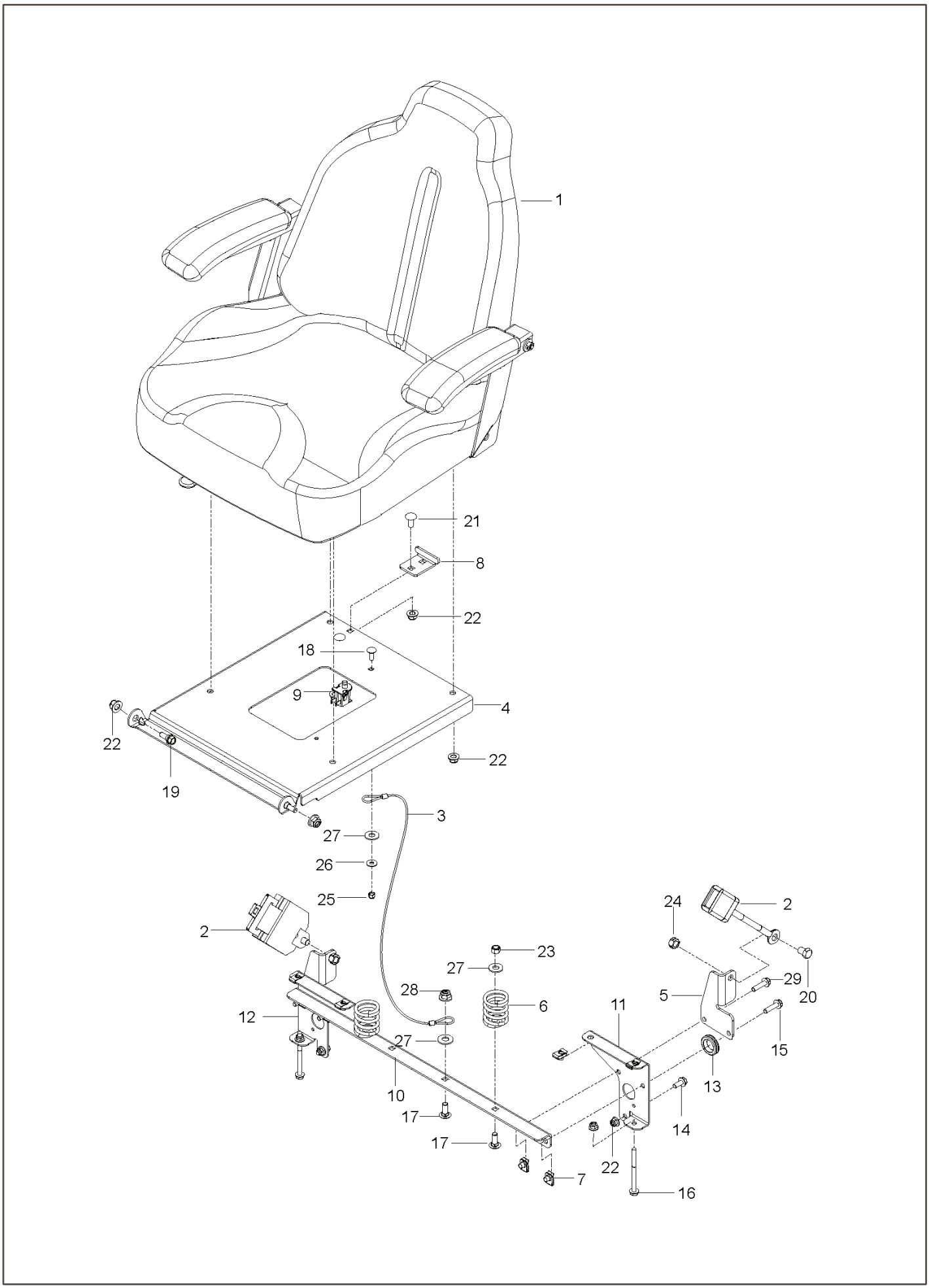
1
21
8
22
18
9
4
22
22
19
3
27
26
25
2
24
2
23
27
28
6
29
20
5
11
12
27
15
13
10
17
14
17
22
7
16

REF.	PART NO.	DESCRIPTION	REMARK	QTY.	KIT
1	536178201	SEAT	Fits, 97045580200 & 96795370300	1	
1	501580402	SEAT		1	
2	539130359	BELT	For all EXCEPT 967696101–00, 967696001–00, 967696001–01	1	
3	539103247	WIRE		1	
4	597149709	SUPPORT	For, 970455802 & 96795370300	1	
4	501762102	SUPPORT		1	
5	584916802	MOUNT	For all EXCEPT 967696101–00, 967696001–00, 967696001–01	2	
6	587613301	SPRING		2	
7	539104763	CLIP		8	
8	539130793	STOP		1	
9	539119741	SWITCH	For all EXCEPT 967696101–00, 967696001–00, 967696001–01	1	
9	532197802	SWITCH	For 967696101–00, 967696001–00, 967696001–01	1	
10	584809102	SUPPORT	For all EXCEPT 96795370100, 97045580100	1	
10	593144402	SUPPORT	For 96795370100, 97045580100	1	
11	584990102	SUPPORT	For 96795370100, 967953702–00, 97045580100	1	
11	584990202	SUPPORT	For 96795370100, 967953702–00, 97045580100	1	
12	584990202	SUPPORT	For 96795370100, 967953702–00, 97045580100	1	
12	584990102	SUPPORT	For 96795370100, 967953702–00, 97045580100	1	
13	539105974	GROMMET		1	
14	874490512	BOLT		2	
15	525544001	BOLT	For all EXCEPT 97045580100	4	
15	592858702	BOLT	For 97045580100	4	
16	874490560	BOLT		2	
17	539990645	BOLT	For all EXCEPT 97045580100	3	
17	595316801	BOLT	For 97045580100	3	
18	539115620	1/4–20X3/4 CARR BLT	For all EXCEPT 97045580100	1	
18	596238401	BOLT	For 97045580100	1	
19	539130896	BOLT		2	
20	539112034	HCS 7/16–20 X .75 GD 5	For 967696102–00, 96795370100, 96769610201	2	
20	539124775	SCREW	For 967953702–00	2	
21	872050506	BOLT	For 967696102–00, 96769610201, 97045580100	2	
22	539112899	NUT, 5/16–18, NYLOC	For all EXCEPT 967696101–00, 967696001–00, 967696001–01	9	
22	873800500	LOCK NUT	For 967696101–00, 967696001–00, 967696001–01	9	
22	594944401	NUT	For 97045580100	1	
23	539976979	NUT	For 967953702–00	2	
23	521996501	NUT	For 967696101–00, 967696001–00, 967696001–01	2	
23	596240901	NUT	For 97045580100	2	
24	539990394	NUT		2	
25	539976978	NUT	For all EXCEPT 97045580100	1	
25	595086601	NUT	For 97045580100	1	
26	819091216	WASHER	For all EXCEPT 97045580100	1	
26	596204201	WASHER	For 97045580100	1	

REF.	PART NO.	DESCRIPTION	REMARK	QTY.	KIT
27	819141614	WASHER	For all EXCEPT 97045580100	4	
27	596433701	WASHER	For 97045580100	4	
28	521996501	NUT	For 967696101–00, 967696001–00, 967696001–01	1	
28	539976979	NUT	For 967953702–00	1	
29	525544002	BOLT	For 97045580100	1	

For 97045580100

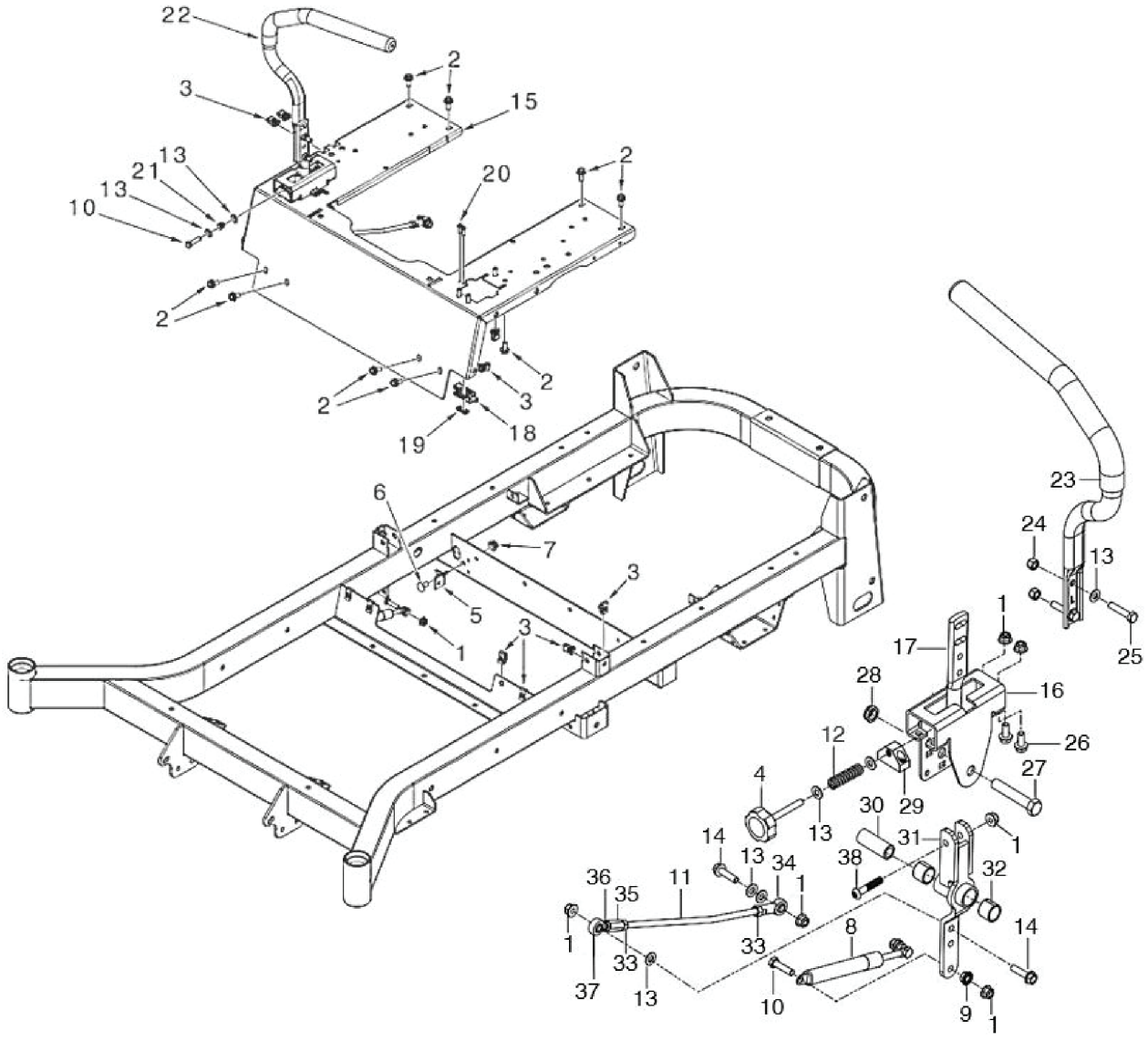

REF.	PART NO.	DESCRIPTION	REMARK	QTY.	KIT
1	594944401	NUT		1	
2	592858702	BOLT		1	
3	539104763	CLIP		1	
4	596400701	KNOB		1	
5	575245202	BRACKET		1	
6	596136001	BOLT		1	
7	521996502	NUT		1	
8	539102720	GAS SPRING		1	
9	596039201	LOCK NUT		1	
10	595305701	SCREW		1	
11	574811402	ROD		1	
12	576850301	SPRING		1	
13	596204101	WASHER		1	
14	525544002	BOLT		1	
15	586867702	SUPPORT		1	
16	585124705	BRACKET		1	
17	577420001	LEVER		1	
18	539101080	SWITCH		1	
19	581223002	PLATE		1	
20	574822701	SCREW		1	
21	539102845	SPRING		1	
22	590090803	TUBE		1	
23	590090804	TUBE		1	
24	596583702	NUT		1	
25	596582201	BOLT		1	
26	874490512	BOLT		1	
27	596434301	BOLT		1	
28	539108010	NUT		1	
29	581437502	BLOCK		1	
30	584927201	SPACER		1	
31	587187701	CONTROL		1	
32	532438282	BEARING UNIT		1	
33	596040901	HEXAGON NUT		1	
34	579764601	JOINT		1	
35	596718601	COUPLER		1	
36	596584101	NUT		1	
37	588692502	ROD		1	
38	576850402	SCREW		1	

For all EXCEPT 97045580100

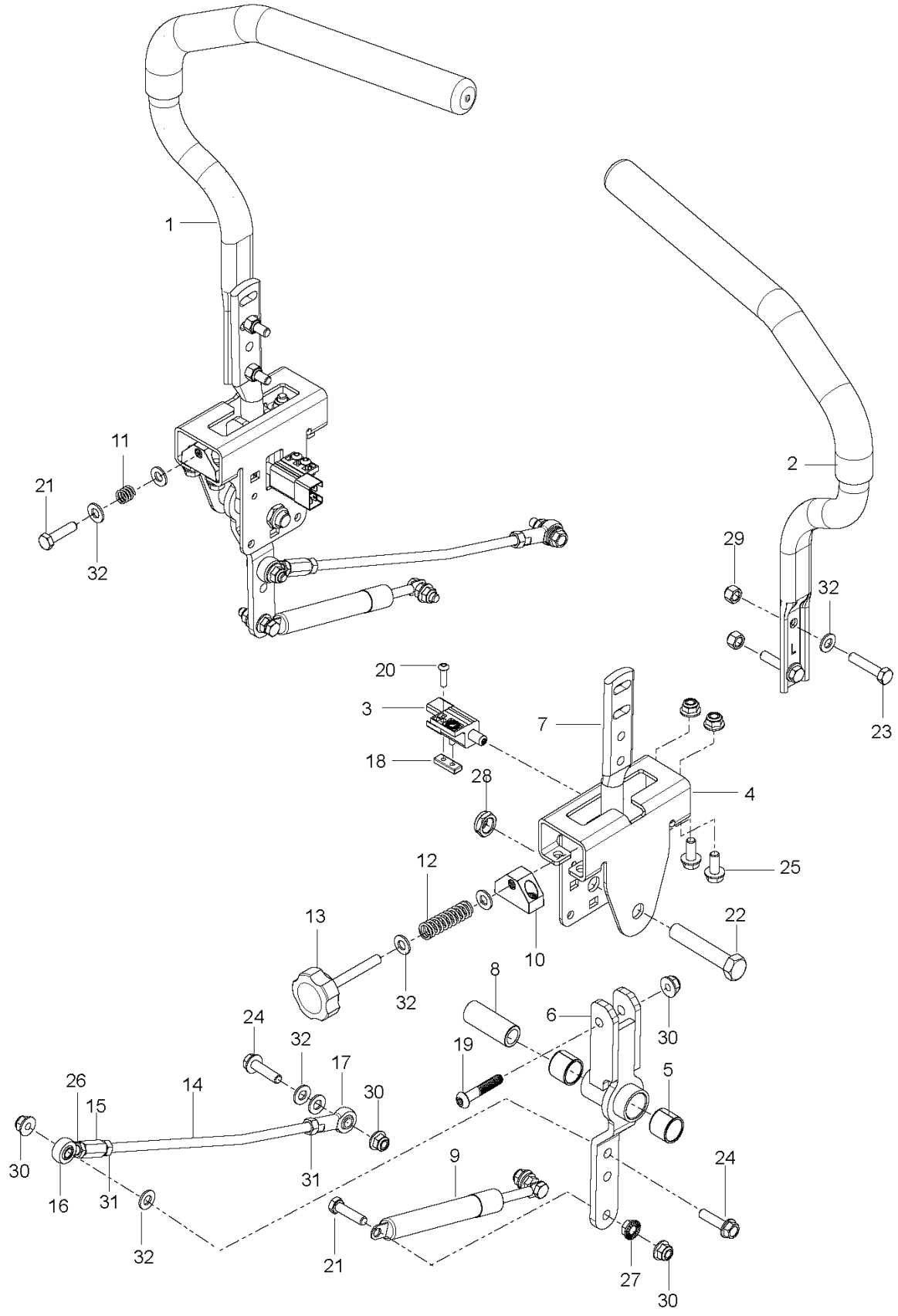

REF.	PART NO.	DESCRIPTION	REMARK	QTY.	KIT
1	590090803	TUBE		1	
2	590090804	TUBE		1	
3	532109553	SWITCH		2	
4	585124705	BRACKET		2	
5	532438282	BEARING UNIT		4	
6	587187701	CONTROL		2	
7	577420001	LEVER		2	
8	584927201	SPACER		2	
9	539102720	GAS SPRING		2	
10	581437501	BLOCK		2	
11	539102845	SPRING		1	
12	576850301	SPRING		1	
13	539131799	KNOB		1	
14	574811401	ROD		2	
15	539116689	ROD END COUPLER		2	
16	588692502	ROD		2	
17	579764601	JOINT		2	
18	581223001	PLATE		2	
19	576850402	SCREW		2	
20	574822701	SCREW		4	
21	874780520	BOLT		5	
22	874780844	BOLT		2	
23	539976935	CAPSCREW		4	
24	525544001	BOLT		4	
25	874490512	BOLT		8	
26	539991073	NUT		2	
27	539990585	NUT		4	
28	539108010	NUT		2	
29	539990717	NUT		4	
30	539112899	NUT, 5/16–18, NYLOC		10	
31	539990223	NUT		4	
32	819111116	WASHER		14	

For 97045580100

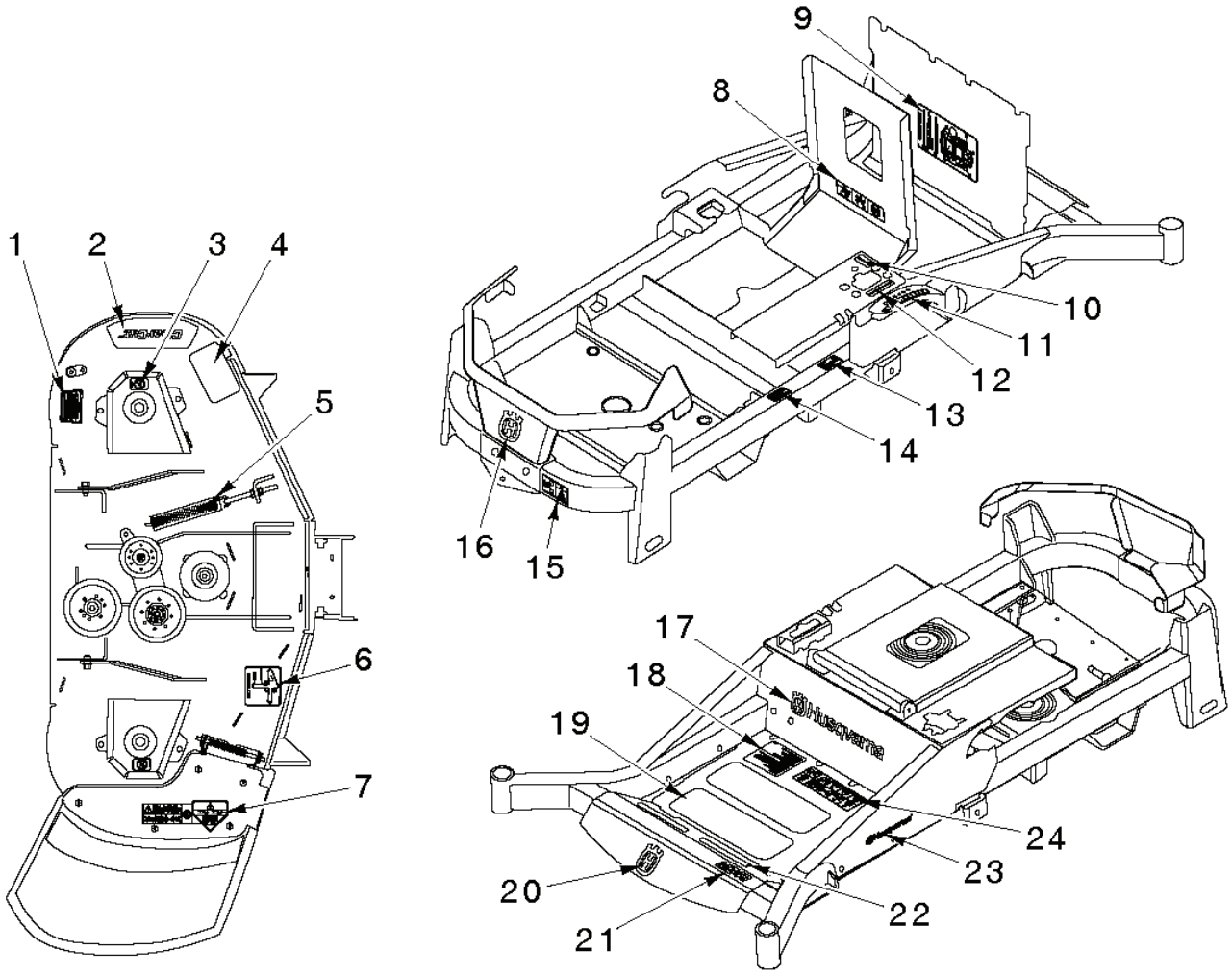

REF.	PART NO.	DESCRIPTION	REMARK	QTY.	KIT
1	592898301	DECAL		1	
2	590885001	DECAL		1	
3	589357901	DECAL		1	
4	539121322	PAD		1	
5	532425417	PAD		1	
6	539112620	DECAL		1	
7	586978801	DECAL		1	
8	539105745	DECAL		1	
9	539132187	DECAL		1	
10	585142601	DECAL		1	
11	539132039	DECAL		1	
12	589283001	DECAL		1	
13	000000000	W/O DESCRIPTION	Model & Serial # Location	1	
14	597998901	DECAL		1	
15	539105744	DECAL		1	
16	574455001	DECAL		1	
17	591357401	DECAL		1	
18	586342501	DECAL		1	
19	539977778	MAT		1	
20	532428676	DECAL		1	
21	592917901	DECAL		1	
22	539121322	PAD		1	
23	532429196	DECAL		1	
24	590485501	DECAL		1	

For all EXCEPT 97045580100

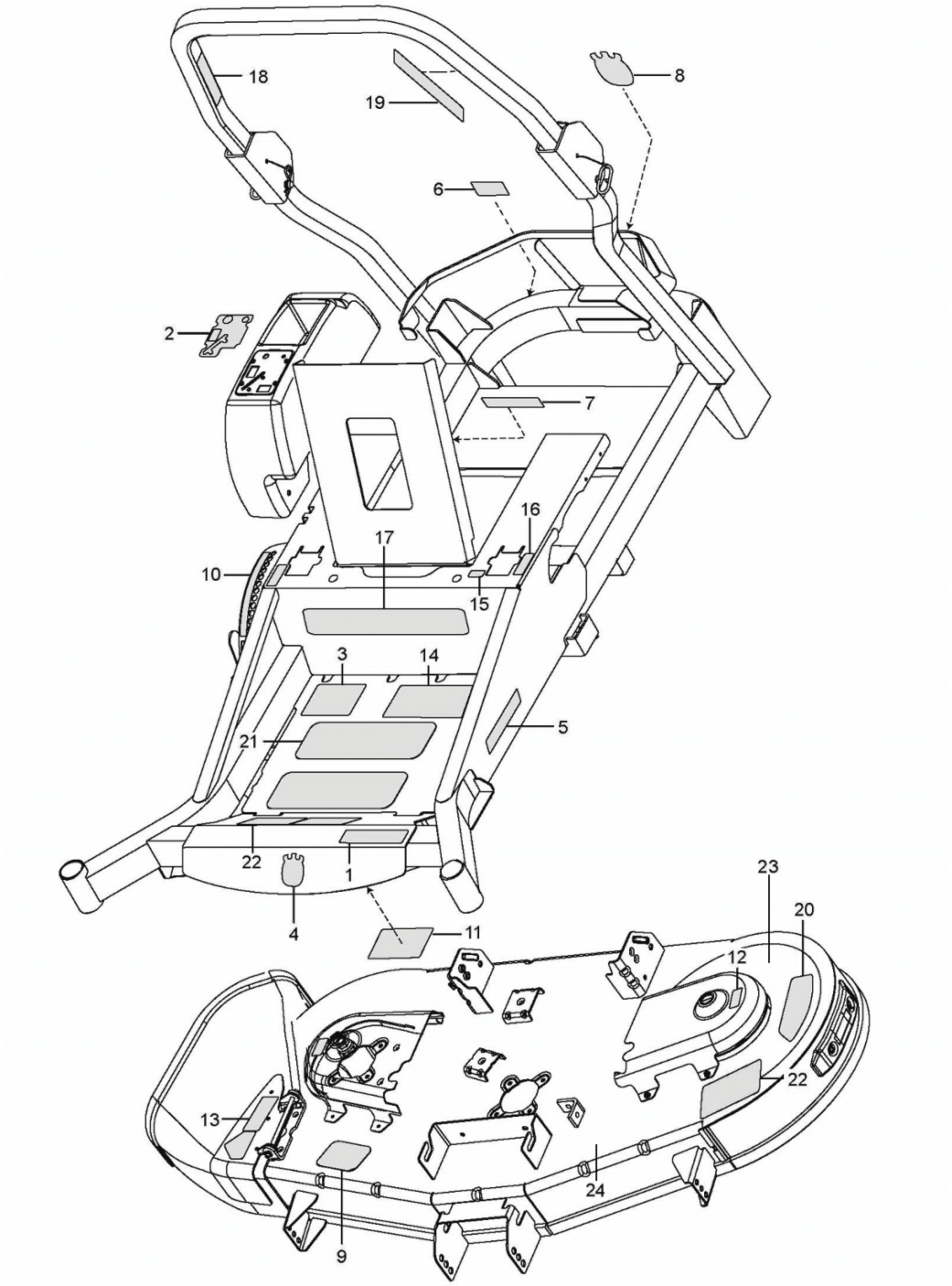

REF.	PART NO.	DESCRIPTION	REMARK	QTY.	KIT
1	592917901	DECAL		1	
2	574841103	DECAL		1	
3	586342501	DECAL		1	
4	532428676	DECAL		2	
5	532429196	DECAL		2	
6	539105744	DECAL		1	
7	539105745	DECAL		1	
8	574455001	DECAL		1	
9	591163901	DECAL	For 96795370100	1	
10	539132039	DECAL		1	
11	539132187	DECAL		1	
12	589357901	DECAL		2	
13	586978801	DECAL		1	
14	590485501	DECAL		1	
15	585142601	DECAL		2	
16	589283001	DECAL		2	
17	591357401	DECAL		1	
18	574569002	DECAL	For 967696102–00, 96769610201, 96795370100	1	
19	574569005	DECAL	For 967696102–00, 96769610201, 96795370100	1	
19	529502601	DECAL	For 96795370200, 96769610201	1	
19	529502602	DECAL	French	1	
20	593808801	DECAL	For 967696102–00, 96795370100, 967953702–00, 96769610201	1	
21	539977778	MAT		2	
22	539121322	PAD		3	
23	592898301	DECAL	For 96795370100	2	
24	591163901	DECAL	For 96795370100	1	

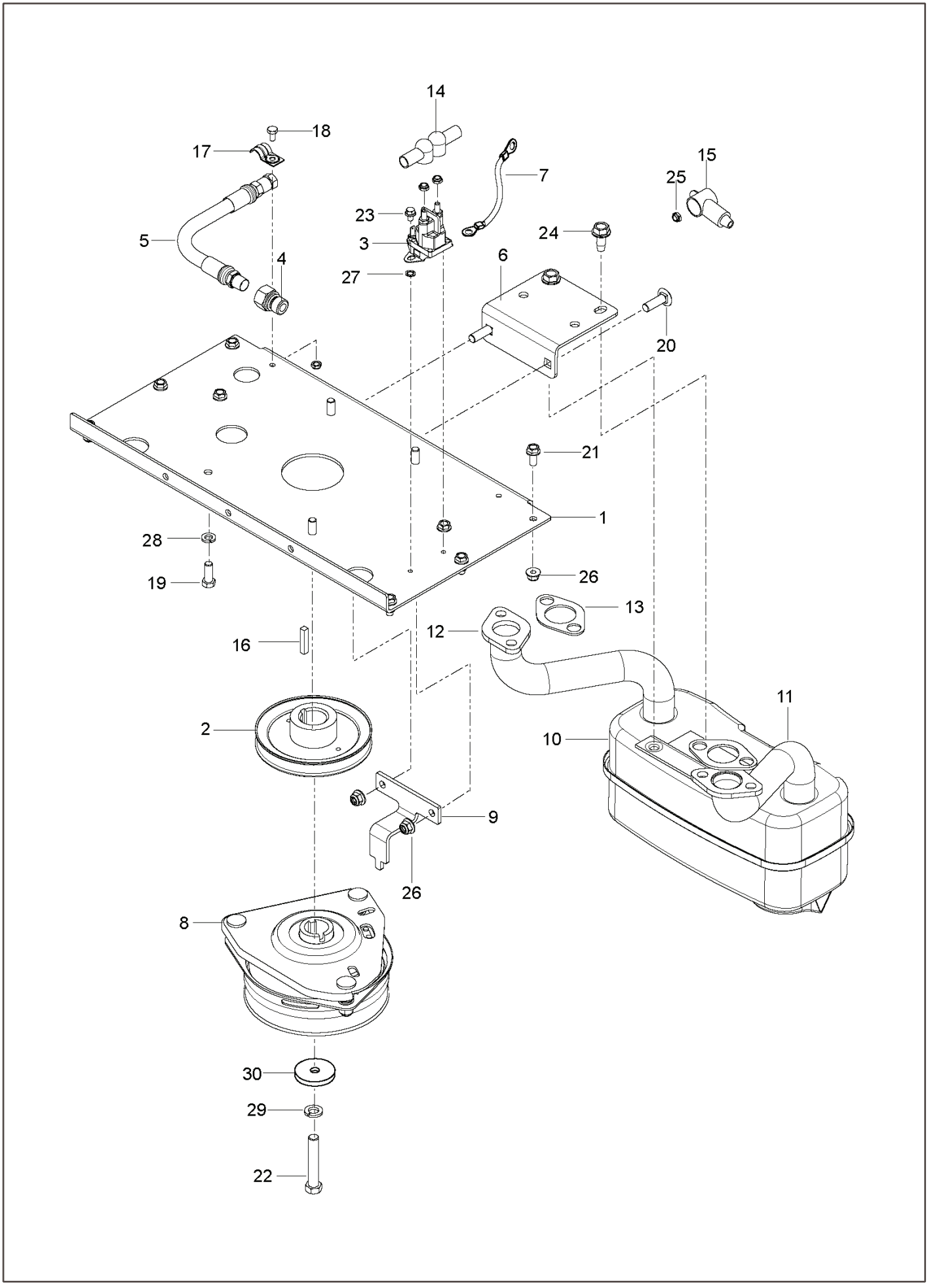
14
18
17
15
25
7
23
5
3
24
4
27
6
20
21
1
28
19
26
13
12
16
11
2
10
9
26
8
30
29
22

REF.	PART NO.	DESCRIPTION	REMARK	QTY.	KIT
1	586651402	PLATE		1	
2	585813701	PULLEY		1	
3	582042801	SOLENOID	For all EXCEPT 97045580100	1	
3	582042802	SOLENOID	For 97045580100	1	
4	522599001	ADAPTER		1	
5	584825501	HOSE ASSY		1	
6	575229902	BRACKET		1	
7	539102757	CABLE		1	
8	532179335	CLUTCH		1	
9	585813601	BRACKET		1	
10	539131604	MUFFLER ASSY		1	
11	583955601	TUBE	For all EXCEPT 967696001–00, 967696001–01	1	
11	583954501	TUBE	For 967696001–00, 967696001–01	1	
12	583955701	TUBE	For all EXCEPT 967696001–00, 967696001–01	1	
12	583954801	TUBE	For 967696001–00, 967696001–01	1	
13	586839701	GASKET		2	
14	532131563	COVER		2	
15	539102759	INSULATOR		1	
16	539912757	KEY		1	
17	539101363	CLAMP		1	
18	539990071	HCS ¼20 X ½ GR 5 ZD	For all EXCEPT 97045580100	1	
18	596437001	SCREW	For 97045580100	1	
19	539990563	SCREW	For all EXCEPT 967696001–00, 967696001–01	4	
19	817120616	SCREW	For 967696001–00, 967696001–01	4	
19	596564401	BOLT	For 97045580100	4	
20	539107271	SCREW	For all EXCEPT 97045580100	2	
20	596435701	BOLT	For 97045580100	2	
21	874490512	BOLT	For all EXCEPT 97045580100	8	
21	592858702	BOLT	For 97045580100	8	
22	581332802	BOLT		1	
23	539990302	HWST 1/4C X 3/8		1	
24	539107475	BOLT	For all EXCEPT 967696001–00, 967696001–01	2	
24	817490512	SCREW	For 967696001–00, 967696001–01	2	
24	596135901	BOLT	For 97045580100	2	
25	539108120	NUT	For all EXCEPT 97045580100	4	
25	596031501	LOCK NUT	For 97045580100	4	
26	539112899	NUT, 5/16–18, NYLOC	For all EXCEPT 97045580100	10	
26	594944401	NUT	For 97045580100	10	
27	539990053	WASHER	For all EXCEPT 97045580100	1	
27	594944401	NUT	For 97045580100	1	
28	539990118	WASHER	For all EXCEPT 967696001–00, 967696001–01, 97045580100	4	
28	596238701	WASHER	For 97045580100	4	
29	539990247	WASHER	For all EXCEPT 97045580100	1	
29	596238901	WASHER	For 97045580100	1	
30	539106504	WASHER		1	
	532198316	PIGTAIL.MATNLK.OLD.HARN		1	
	000000000	W/O DESCRIPTION	For 967696101–00, Engine, Kawasaki FR730V-FS00-S 24 Hp. For engine replacement parts, see Kawasaki dealer.	1	
	532184362	NUT	For 97045580100	1	

For all EXCEPT 967696101-00, 967696001-00, 967696001-01

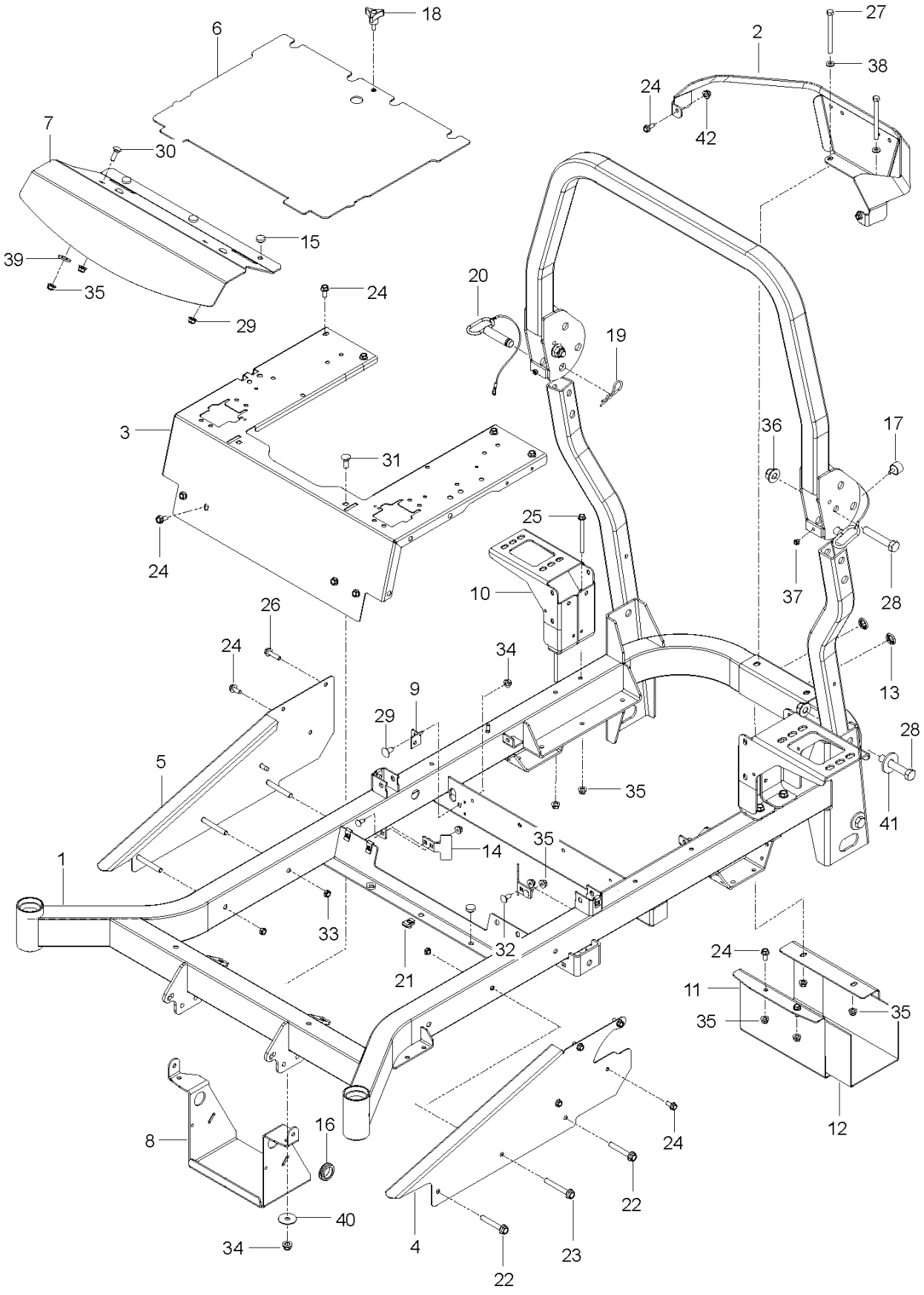

REF.	PART NO.	DESCRIPTION	REMARK	QTY.	KIT
1	501656001	FRAME	For all EXCEPT 97045580100	1	
1	587390702	FRAME	For 97045580100	1	
2	586893002	GUARD	For 967696102−00, 967953702−00, 96769610201	1	
2	582693702	GUARD	For 96795370100, 97045580100	1	
3	586867702	SUPPORT		1	
3	598704902	SUPPORT	For 96795370200, 96769610201, 97045580100	1	
4	539131577	PLATE		1	
5	539131579	PLATE		1	
6	539131581	PLATE	For 96795370200, 96769610201, 97045580100	1	
6	539132744	PLATE		1	
7	539132380	PLATE	For 967696102−00, 967953702−00, 96769610201	1	
7	596522202	PLATE	For 96795370200, 96769610201, 97045580100	1	
8	587048702	BRACKET	For 96769610201, 967696102−00	1	
8	594037402	BRACKET	For 96795370100, 967953702−00	1	
9	575245202	BRACKET		2	
10	575533602	MOUNT		2	
11	575230402	SHIELD		1	
12	539132859	HEAT SHIELD		1	
13	587990501	CAP		2	
14	505256401	STOP	For 967696102−00, 96769610201, 967953702−00	2	
14	593634302	STOP	For 96795370100	2	
15	539102587	ABSORBER		7	
16	539105974	GROMMET		1	
17	522801401	BUMPER	For 967696102−00, 96795370100, 96769610201, 97045580100	2	
17	539104763	CLIP	For 967696102−00, 96795370100, 96769610201, 97045580100	2	
18	539104411	KNOB	For all EXCEPT 97045580100	1	
18	597783101	KNOB	For 97045580100	1	
19	539200715	PIN HAIR .148 X 2−15/16 #210	For 967696102−00, 96795370100, 96769610201	2	
19	819111116	WASHER	For 967953702−00	2	
19	596918001	PIN	For 97045580100	2	
20	574388001	PIN	For 967696102−00, 96795370100, 96769610201, 97045580100	2	
20	539990250	WASHER	For 967953702−00	2	
21	539104763	CLIP	For 967696102−00, 96795370100, 96769610201, 97045580100	5	
21	819132416	WASHER	For 967953702−00	5	
22	539133006	BOLT		2	
23	874490644	BOLT		2	
24	874490512	BOLT	For all EXCEPT 97045580100	18	
24	592858702	BOLT	For 97045580100	18	
25	874490560	BOLT		4	
26	525544001	BOLT		1	
27	539102335	BOLT	For all EXCEPT 97045580100	2	
27	596435501	BOLT	For 97045580100	2	
28	580754601	BOLT	For 96769610201, 967696102−00	6	
28	539990316	BOLT	For 967696102−00, 96795370100, 96769610201	6	
28	580754602	BOLT	For 97045580100	6	
29	595901601	BOLT	For 967696102−00, 96769610201	6	

REF.	PART NO.	DESCRIPTION	REMARK	QTY.	KIT
29	872110606	BOLT	For 96795370100	6	
29	596136001	BOLT	For 967953702–00	6	
30	539990208	SCREW	For all EXCEPT 97045580100	3	
30	595901501	BOLT	For 97045580100	3	
31	539990645	BOLT		2	
32	539990316	BOLT	For 967696102–00, 96795370100, 96769610201	4	
32	539112899	NUT, 5/16–18, NYLOC	For 967953702–00	4	
33	539200282	NUT		6	
34	521996501	NUT		2	
35	539112899	NUT, 5/16–18, NYLOC	For 967953702–00	13	
35	594944401	NUT	For 97045580100	13	
36	525829101	NUT	For all EXCEPT 97045580100	6	
36	525829102	NUT	For 97045580100	6	
37	539976978	NUT	For all EXCEPT 97045580100	2	
37	595086601	NUT	For 97045580100	2	
38	819111116	WASHER	For 967953702–00	2	
38	596435501	BOLT	For 97045580100	2	
39	539990250	WASHER	For 967953702–00	1	
39	595086801	WASHER	For 97045580100	1	
40	819132416	WASHER	For 967953702–00	2	
41	539102653	WASHER	For all EXCEPT 97045580100	4	
41	594946401	WASHER	For 97045580100	4	
42	594944401	NUT	For 97045580100	1	
	575274801	KIT	For 967696102–00, 96769610201, NOT SHOWN PROTECTION FRAME	1	
	575623701	ROPS	For 967953702–00	1	

For 967696101-00, 967696001-00, 967696001-01

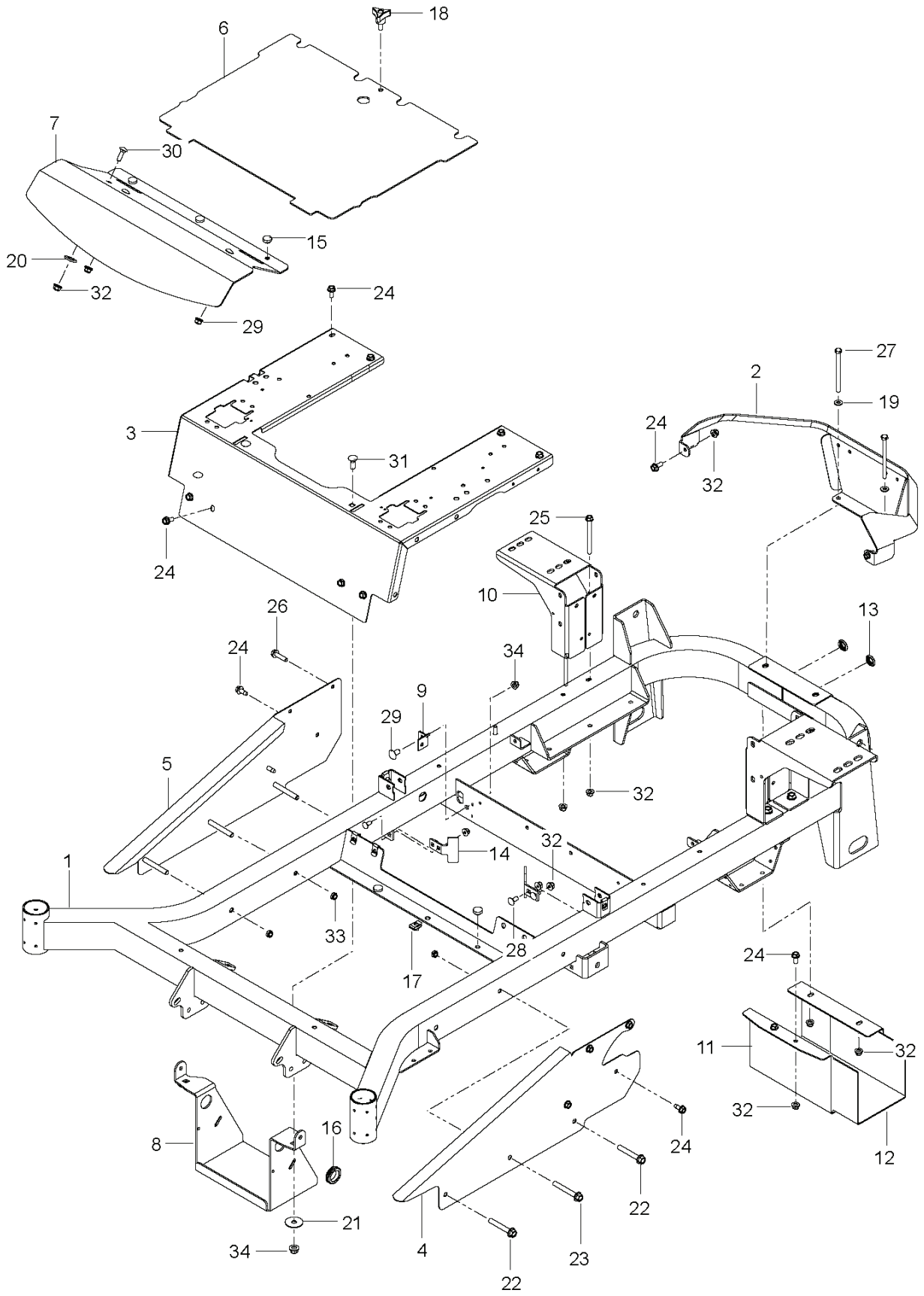

REF.	PART NO.	DESCRIPTION	REMARK	QTY.	KIT
1	501656001	FRAME		1	
2	586893002	GUARD		1	
3	586867702	SUPPORT		1	
4	539131577	PLATE		1	
5	539131579	PLATE		1	
6	539132744	PLATE		1	
7	539132380	PLATE		1	
8	587048702	BRACKET		1	
9	575245202	BRACKET		2	
10	575533602	MOUNT		2	
11	575230402	SHIELD		1	
12	539132859	HEAT SHIELD		1	
13	587990501	CAP		2	
14	505256401	STOP		2	
15	539102587	ABSORBER		7	
16	539105974	GROMMET		1	
17	539104763	CLIP		1	
18	539104411	KNOB		1	
19	819111116	WASHER		2	
20	539990250	WASHER		1	
21	819132416	WASHER		2	
22	539133006	BOLT		2	
23	874490644	BOLT		2	
24	874490512	BOLT		18	
25	874490560	BOLT		4	
26	525544001	BOLT		1	
27	539102335	BOLT		2	
28	539990316	BOLT		4	
29	872050606	BOLT		2	
30	539990208	SCREW		3	
31	539990645	BOLT		2	
32	539112899	NUT, 5/16–18, NYLOC		11	
33	539200282	NUT		6	
34	521996501	NUT		4	

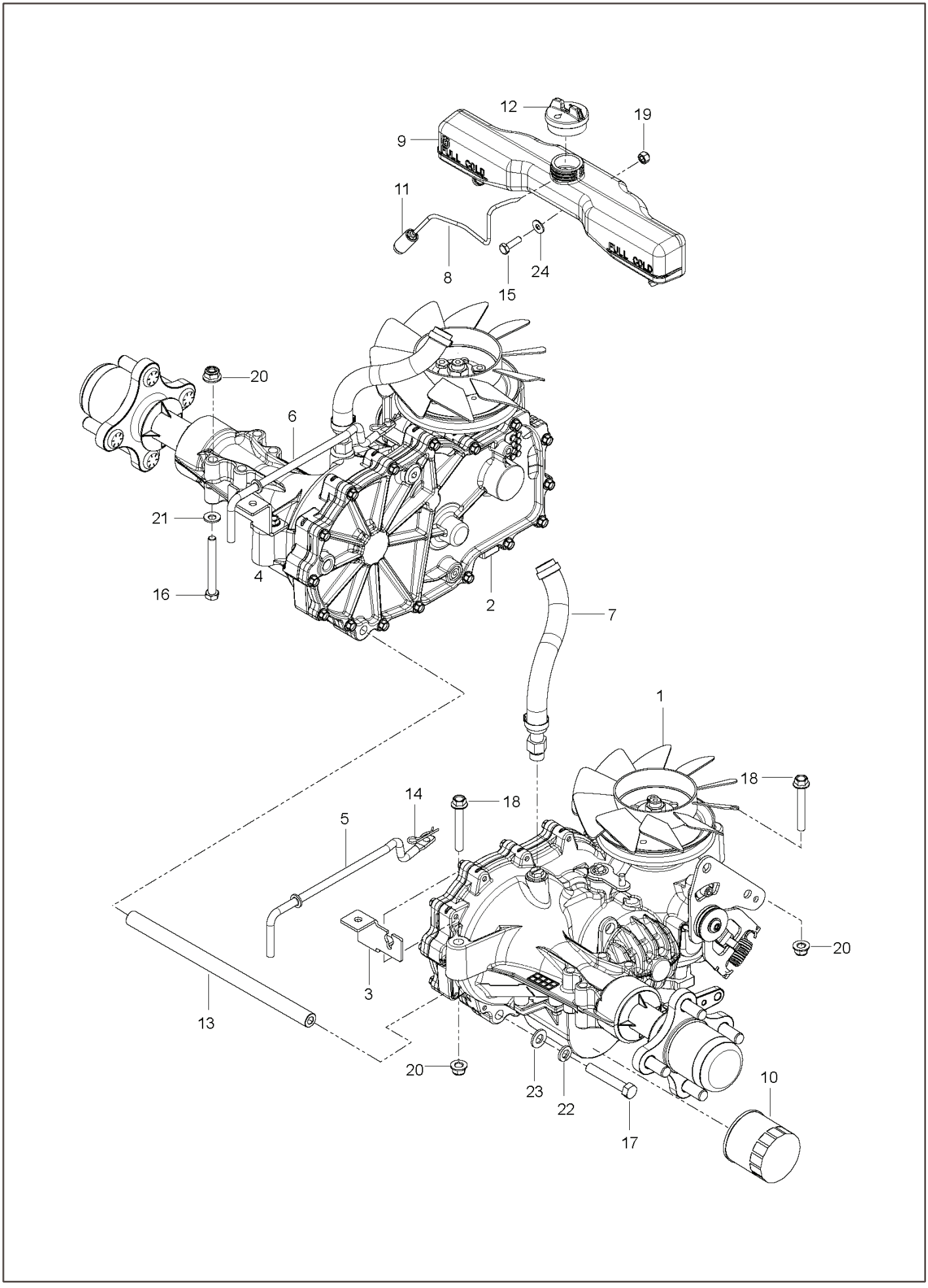
12
19
9
11
8
15
24
20
6
21
16
4
2
7
1
18
14
18
5
3
13
20
18
20
23
22
17
10

REF.	PART NO.	DESCRIPTION	REMARK	QTY.	KIT
1	577227701	TRANSMISSION	For 967953702–00, 96769610201, 97045580100	1	
1	577227702	TRANSMISSION	For 967953702–00, 96769610201, 97045580100	1	
2	577227702	TRANSMISSION	For 967953702–00, 96769610201, 97045580100	1	
2	577227701	TRANSMISSION	For 967953702–00, 96769610201, 97045580100	1	
3	593278902	BRACKET	For 96795370100	1	
3	593279002	BRACKET	For 96795370100	1	
3	575017102	BRACKET	For all EXCEPT 96795370100, 967953702–00, 96769610201, 97045580100	1	
4	593279002	BRACKET	For 96795370100	1	
4	593278902	BRACKET	For 96795370100	1	
4	575017002	BRACKET	For all EXCEPT 96795370100, 967953702–00, 96769610201, 97045580100	1	
5	539131616	LINKAGE. LEFT BYPASS	For all EXCEPT 97045580100	1	
5	596501901	LINKAGE	For 97045580100	1	
6	539131618	LINKAGE. RIGHT BYPASS	For all EXCEPT 97045580100	1	
6	596500701	LINKAGE	For 97045580100	1	
7	574892101	HOSE ASSY		2	
8	586067501	HOSE		1	
9	585318201	TANK		1	
10	539113466	OIL FILTER		2	
11	530095646	FILTER		1	
11	530095601	FUEL FILTER	30 pcs, plastic bag of 530095646	1	
12	586072701	CAP		1	
13	574868501	SPACER	For all EXCEPT 97045580100	1	
13	574868502	SPACER	For 97045580100	1	
14	539976988	PIN	For all EXCEPT 97045580100	2	
14	596580601	PIN	For 97045580100	2	
15	539990643	BOLT	For all EXCEPT 97045580100	1	
15	596565401	SCREW	For 97045580100	1	
16	874780544	BOLT	For all EXCEPT 97045580100	4	
16	596218601	BOLT	For 97045580100	4	
17	539108551	HCS 3/8–16X2–1/4 LOC PATCH GR8		2	
18	574233801	SCREW		4	
19	539976978	NUT	For all EXCEPT 97045580100	1	
19	595086601	NUT	For 97045580100	1	
20	539112899	NUT, 5/16–18, NYLOC	For all EXCEPT 97045580100	8	
20	594944401	NUT	For 97045580100	8	
21	819111116	WASHER	For all EXCEPT 97045580100	4	
21	596204101	WASHER	For 97045580100	4	
22	539990118	WASHER	For all EXCEPT 97045580100	2	
22	596238701	WASHER	For 97045580100	2	
23	539990122	WASHER	For all EXCEPT 97045580100	2	
23	596565301	WASHER	For 97045580100	2	
24	539990055	WASHER	For all EXCEPT 97045580100	1	
24	596133001	WASHER	For 97045580100	1	

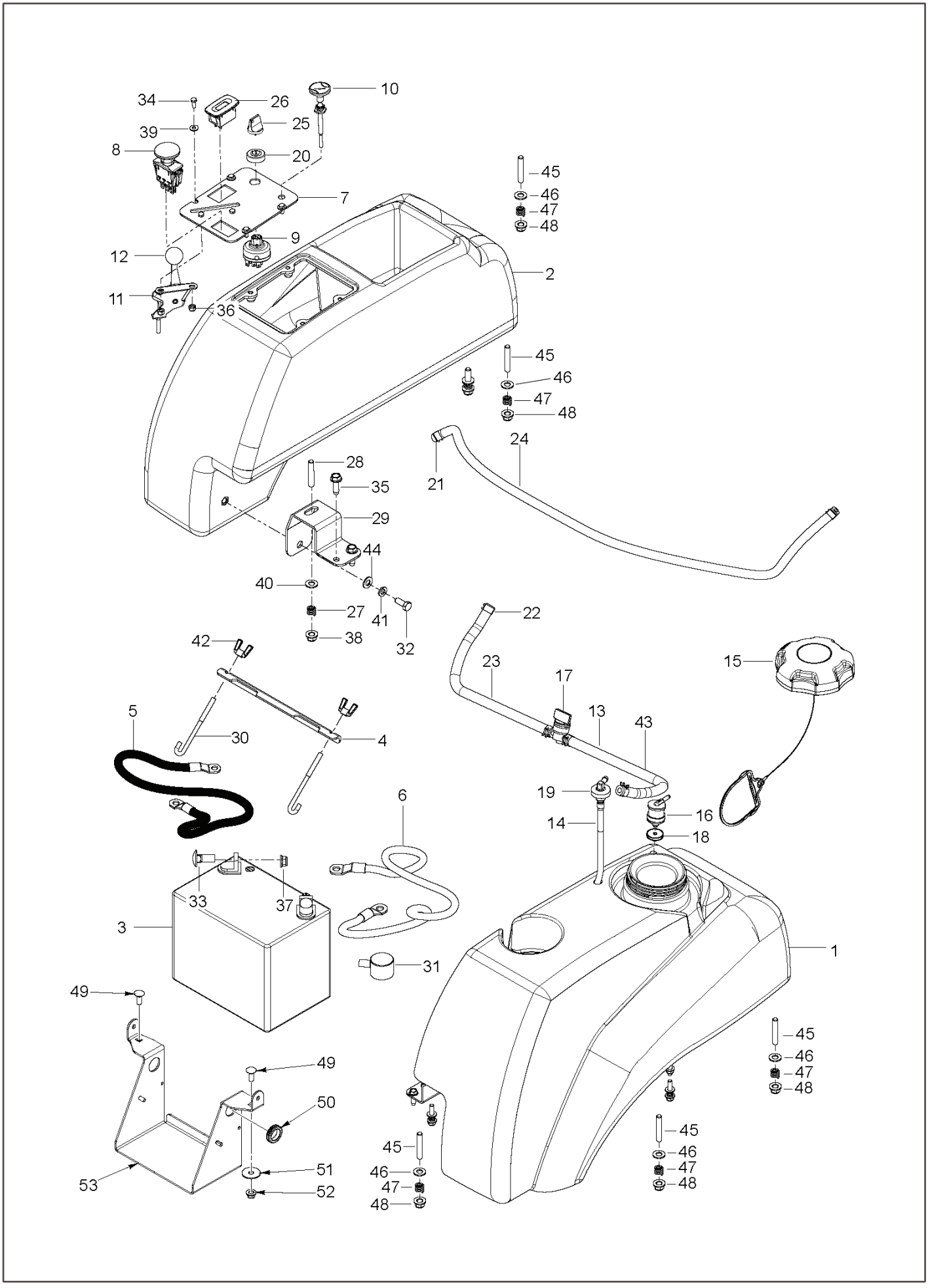
10
34
26
39
25
8
20
45
46
47
48
7
9
12
2
11
36
45
46
47
48
24
21
28
35
29
44
40
27
41
38
32
22
23
17
13
43
15
42
5
30
4
19
16
14
18
6
33
37
3
31
1
49
45
46
47
48
49
50
51
52
53
45
46
47
48
45
46
47
48

REF.	PART NO.	DESCRIPTION	REMARK	QTY.	KIT
1	598664901	SERVICE KIT		1	
2	539107593	CONSOLE		1	
3	539102436	BATTERY	For all EXCEPT 96795370100, 967953702–00, 97045580100	1	
3	539102463	BATTERY	For 96795370100, 967953702–00, 97045580100	1	
4	588107201	BRACKET	For all EXCEPT 96795370100, 967953702–00	1	
4	593634404	BRACKET	For 96795370100, 967953702–00, 97045580100	1	
5	588030801	CABLE		1	
6	588030701	CABLE		1	
7	574841204	PLATE		1	
8	582107602	SWITCH		1	
9	574455401	SWITCH	For 97045580100	1	
10	539112439	CHOKE CONTROL	For all EXCEPT 967696001–00, 967696001–01	1	
10	539113458	CABLE	For 967696001–00	1	
10	584971801	CHOKE	For 967696001–01	1	
11	539112438	THROTTLE CABLE	For all EXCEPT 967696001–00, 967696001–01	1	
11	539102732	THROTTLE	For 967696001–00, 967696001–01	1	
12	539133049	KNOB ROUND BALL		1	
13	586123903	FUEL HOSE	For all EXCEPT 967696001–00, 967696001–01	1	17, 22, 23
13	586123901	FUEL HOSE	For 967696001–00, 967696001–01	1	17, 22, 23, 24
14	576469201	FITTING		1	
15	575018101	CAP		1	
16	576618101	TANK VENT		1	
17	539916325	VALVE		1	
18	576618201	GROMMET		1	
19	539105245	GROMMET		1	
20	539103178	NUT CAP		1	
21	575436501	CLAMP		2	
22	532123487	HOSE CLAMP		4	
23	587044810	HOSE		2	
24	587044527	HOSE	For all EXCEPT 967696001–00, 967696001–01	1	
24	587044539	HOSE	For 967696001–00	1	
24	587044555	HOSE	For 967696001–01	1	
25	574455501	KEY		1	
26	586161801	HOUR METER		1	
27	539102845	SPRING	For 967696102–00	6	
28	539102502	STUD	For 967696102–00	6	
29	588843202	SUPPORT		2	
30	510064001	HOOK		2	
31	532435395	TERMINAL COVER		1	
32	539976934	SCREW		2	
33	539990316	BOLT	For all EXCEPT 97045580100	2	
33	595901601	BOLT	For 97045580100	2	
34	539990411	SCREW	For all EXCEPT 97045580100	6	
34	574455401	SWITCH	For 97045580100	6	
35	817490516	SCREW		3	
36	539976977	NUT		2	
37	539990997	NUT	For 967696101–00, 967696102–00, 96769610201	2	
37	539112899	NUT, 5/16–18, NYLOC	For 967696102–00	2	
37	594944401	NUT	For 97045580100	2	
38	539112899	NUT, 5/16–18, NYLOC	For 967696102–00	13	
39	819070818	WASHER		4	
40	819111116	WASHER	For 967696102–00	8	
41	539990187	WASHER		2	
42	539990997	NUT	For 967696101–00, 967696102–00, 96769610201	2	

REF.	PART NO.	DESCRIPTION	REMARK	QTY.	KIT
43	587044826	HOSE	For 967696001–00, 967696001–01	1	
44	819111116	WASHER	For 967696102–00	8	
45	539102502	STUD	For 967696102–00	6	
46	819111116	WASHER	For 967696102–00	8	
47	539102845	SPRING	For 967696102–00	6	
48	539112899	NUT, 5/16–18, NYLOC	For 967696102–00	13	
49	595316801	BOLT	For 97045580100	1	
50	539105974	GROMMET	For 97045580100	1	
51	596133301	WASHER	For 97045580100	1	
52	521996502	NUT	For 97045580100	1	10
53	594037402	BRACKET	For 97045580100	1	
	585999701	HARNESS	For all EXCEPT For 96795370100, 967953702–00	1	
	585999702	HARNESS	For 96795370100, 967953702–00	1	

For 97045580100

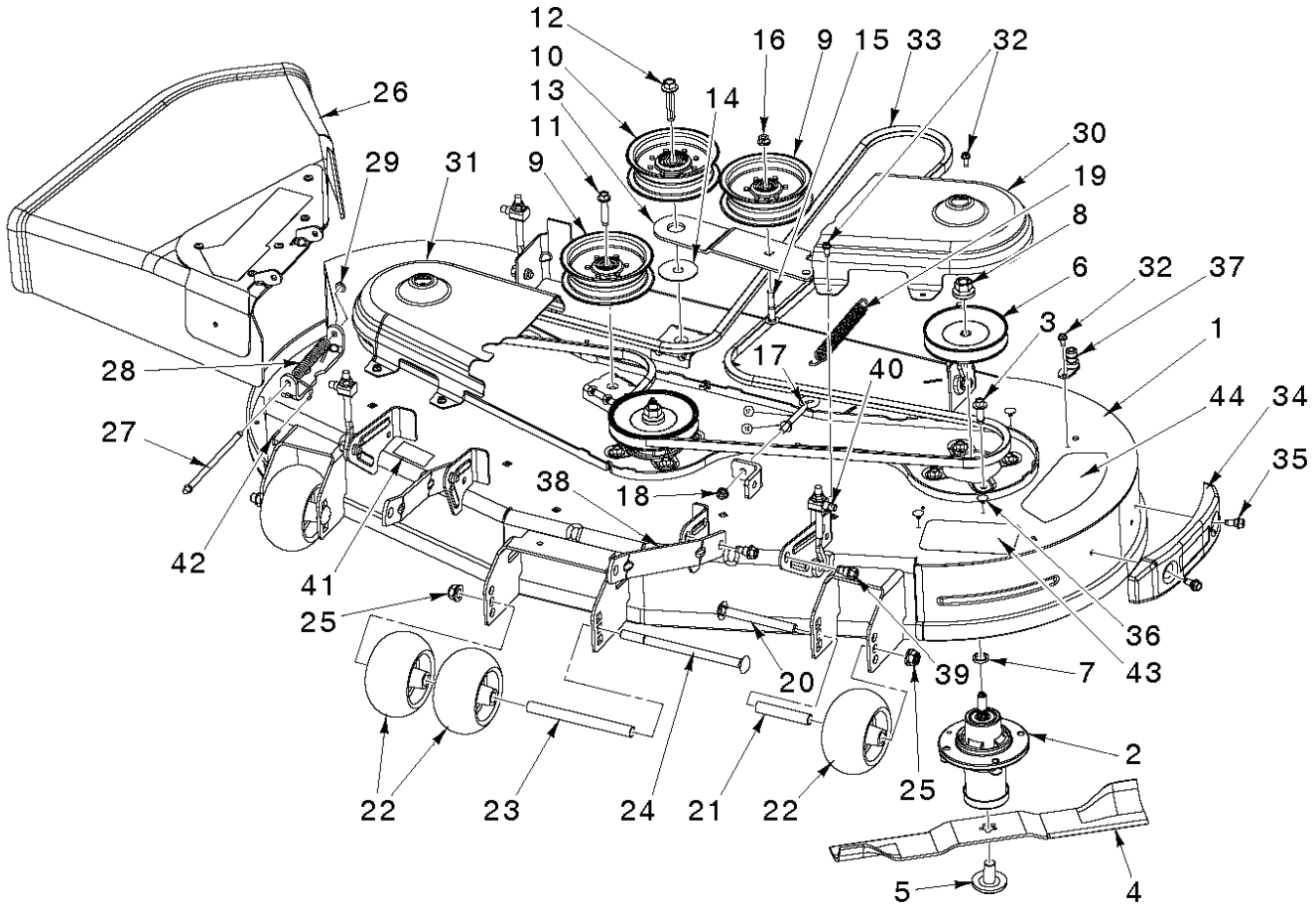

REF.	PART NO.	DESCRIPTION	REMARK	QTY.	KIT
1	591120101	SERVICE KIT		1	
2	539112170	HOUSING ASSY		1	
3	584953901	BOLT		1	
4	582062502	BLADE		1	
5	539119007	SCREW		1	
6	532175708	PULLEY ASSY		1	
7	532187690	WASHER		1	
8	596134801	HEXAGON NUT		1	
9	532196106	PULLEY		1	
10	532196104	PULLEY		1	
11	596564003	BOLT		1	
12	588438301	SCREW		1	
13	582219602	ARM		1	
14	532178515	WASHER		1	
15	596136301	BOLT		1	
16	532409149	NUT		1	
17	596240801	BOLT		1	
18	596039201	LOCK NUT		1	
19	532197251	SPRING		1	
20	510022302	SCREW		1	
21	574196402	TUBE		1	
22	574169601	ROLLER		1	
23	574196502	TUBE		1	
24	594944501	BOLT		1	
25	521991102	NUT		1	
26	590632201	DEFLECTOR ASSY		1	
27	532131491	SHAFT		1	
28	587354701	SPRING		1	
29	532110452	NUT		1	
30	590304403	COVER		1	
31	590304203	COVER		1	
32	532137729	SCREW		1	
33	582236502	BELT		1	
34	590732501	BUMPER ASSY		1	
35	532170165	BOLT		1	
36	589813301	PLUG		1	
37	532415598	HOSE COUPLING		1	
38	587140502	ARM		1	
39	532196539	BOLT		1	
40	596433501	NUT	Jam Nut	1	
40	588783401	LINK ASSY		1	
41	591163901	DECAL		1	
42	532105304	HUB CAP		1	
43	539121322	PAD		1	
44	590885101	DECAL		1	

For all EXCEPT 97045580100

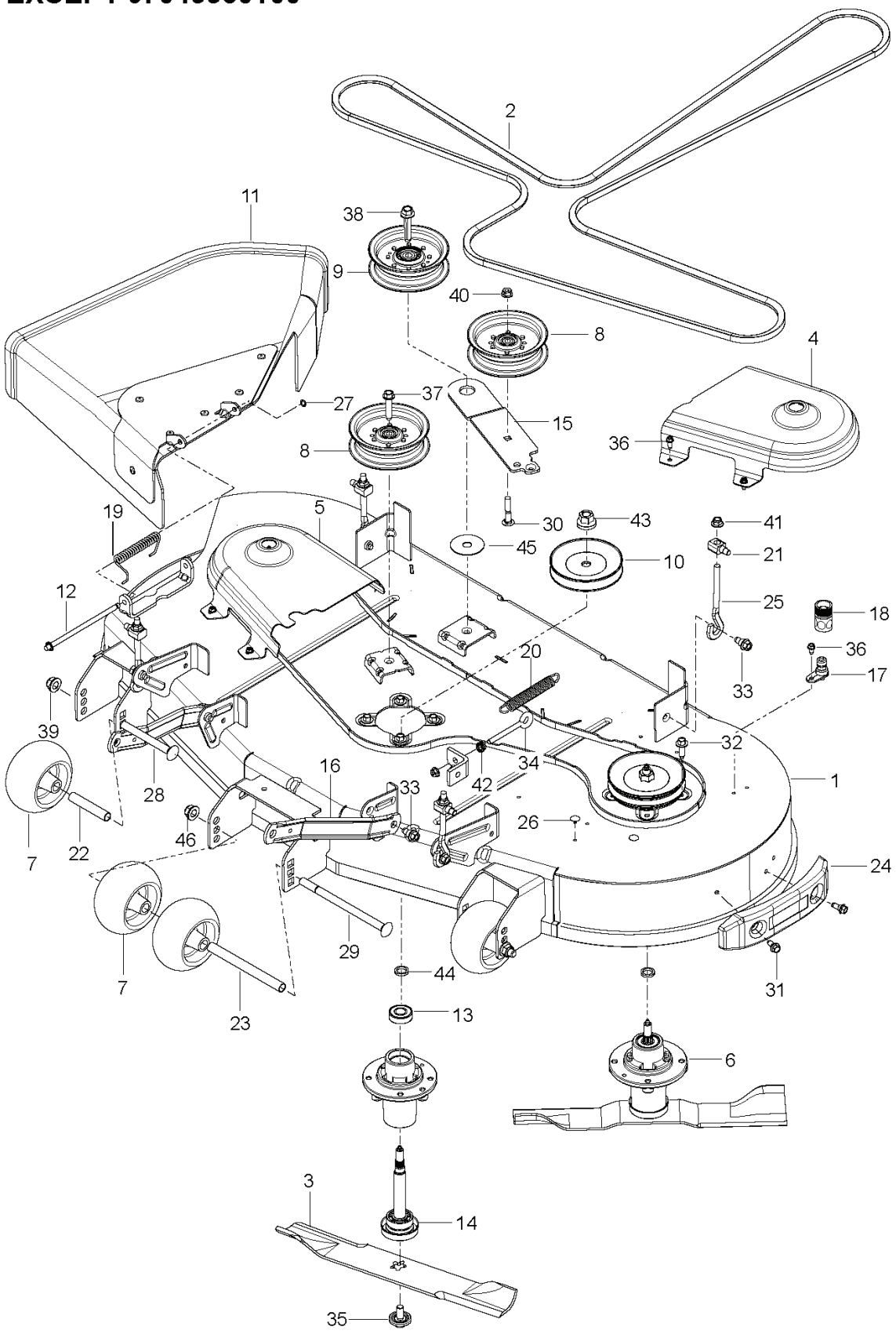

REF.	PART NO.	DESCRIPTION	REMARK	QTY.	KIT
1	591120101	SERVICE KIT		1	
2	582236501	BELT		1	
3	582062502	BLADE	For 96795370100, 967953702–00, 96769610201	3	
3	582760502	BLADE	For all EXCEPT 96795370100, 967953702–00, 96769610201	3	
4	590304402	COVER	For all EXCEPT 96795370100, 967953702–00	1	
4	590304403	COVER	For 96795370100, 967953702–00	1	
5	590304202	COVER	For all EXCEPT 96795370100	1	
5	590304203	COVER	For 96795370100	1	
6	539112170	HOUSING ASSY	For all EXCEPT 96795370100, 967953702–00	3	
6	539131898	SPINDLE	For all EXCEPT 96769610201	3	
7	574169601	ROLLER		4	
8	532196106	PULLEY		2	
9	532196104	PULLEY		1	
10	532175708	PULLEY ASSY		3	
11	590632201	DEFLECTOR ASSY		1	
12	532131491	SHAFT		1	
13	532110485	BEARING		1	
14	532187291	SHAFT		1	
15	582219602	ARM		1	
16	587140502	ARM		2	
17	532415598	HOSE COUPLING		1	
18	532416405	COUPLING		1	
19	587354701	SPRING		1	
20	532197251	SPRING		1	
21	532176205	TRUNION		4	
22	574196401	TUBE		2	
23	574196501	TUBE		1	
24	590732501	BUMPER ASSY		1	
25	588783301	LINK	For all EXCEPT 96795370100	4	
25	596433501	NUT	Jam Nut	1	
25	588783401	LINK ASSY	For 96795370100, Includes: 21, 41	4	
26	589813301	PLUG		3	
27	532110452	NUT		1	
28	510022301	SCREW		2	
29	594944501	BOLT		1	
30	872110616	BOLT		1	
31	532170165	BOLT		2	
32	584953901	BOLT		12	
33	532196539	BOLT		6	
34	539115574	EYE BOLT		1	
35	532193003	SCREW		3	
36	532137729	SCREW		9	
37	817490628	SCREW		1	
38	588438301	SCREW		1	
39	521991101	NUT	For 96795370100	3	
40	532409149	NUT		1	
41	532400244	NUT		4	
42	539990585	NUT		2	
43	532400234	NUT		3	
44	532187690	WASHER		3	
45	532178515	WASHER		1	
46	521991101	NUT	For 96795370100	1	

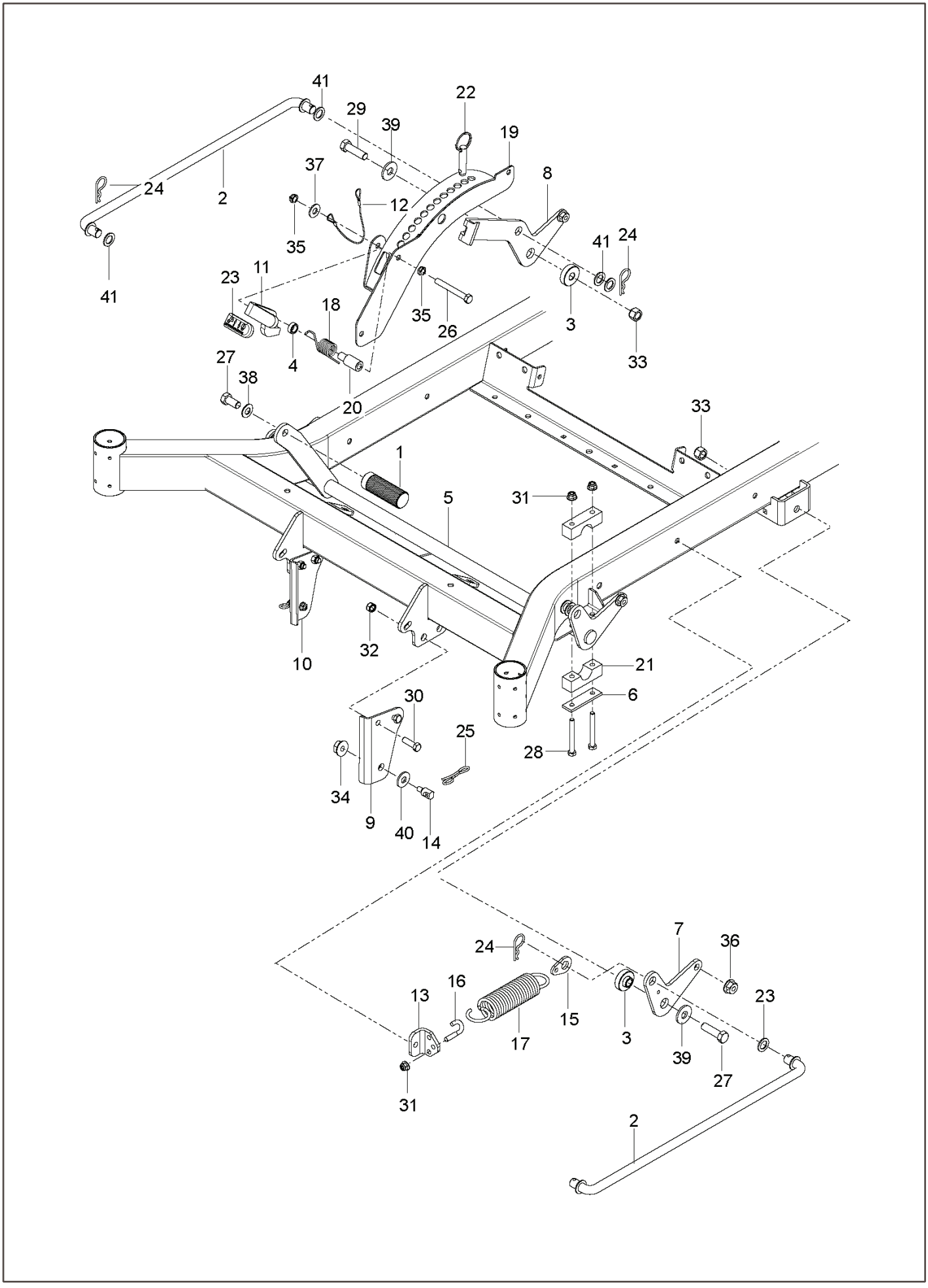
41
29
39
22
19
24
2
37
12
8
35
41
24
23
11
18
35
26
3
33
4
27
38
20
33
1
5
31
10
32
21
6
30
25
28
34
9
40
14
24
7
36
16
13
15
23
17
3
39
27
31
2

REF.	PART NO.	DESCRIPTION	REMARK	QTY.	KIT
1	510408301	PEDAL		1	
2	539110808	CROSS LINK		2	
3	586701701	SPACER		2	
4	539131861	SPACER. .3		1	
5	586928702	LIFT		1	
6	584392702	PLATE		2	
7	539131897	BELLCRANK		1	
8	539131853	BELLCRANK	For all EXCEPT 96795370100, 967953702-00, 97045580100	1	
8	592877702	BELLCRANK	For 96795370100, 967953702-00, 97045580100	1	
9	588812102	BRACKET		1	
9	592878402	BRACKET	For 96795370200, 96769610201, 97045580100	1	
10	588812002	BRACKET		1	
10	592978502	BRACKET	For 96795370200, 96769610201, 97045580100	1	
11	539131566	LATCH. TRANSPORT		1	
12	539105059	ROPE		1	
13	539131791	MOUNT. SPRING	For all EXCEPT 96795370100, 967953702-00, 97045580100	1	
13	593663603	MOUNT	For 96795370100, 967953702-00, 97045580100	1	
14	532195161	STUD		4	
15	539131792	TAB. SPRING	For all EXCEPT 96795370100, 967953702-00, 97045580100	1	
15	593663803	BRACKET	For 96795370100, 967953702-00, 97045580100	1	
16	539112896	BOLT		1	
17	539102642	SPRING		1	
18	539132734	SPRING. TORSION		1	
19	539131850	HEIGHT. ADJUST. DECK		1	
20	539131860	PIVOT. LATCH. TRANSPORT		1	
21	539104808	SUPPORT		4	
22	539132182	PIN		1	
23	539132851	GRIP. TRANSPORT-RELEASE		1	
24	539115501	COTTER		4	
25	532194209	SPRING		2	
26	874780648	BOLT		1	
27	539990646	HHCS 1/2-13 X 1		1	
28	874780544	BOLT		4	
29	539108181	HCS 1/2-13 X 1-3/4 GR 8 ZD		2	
30	539990563	SCREW		4	
31	539112899	NUT, 5/16-18, NYLOC		5	
32	539976979	NUT		4	
33	873800800	NUT		2	
34	873900500	NUT		2	
35	539200282	NUT		2	
36	532409149	NUT	For all EXCEPT 96795370100	4	
36	539132019	NUT	For 96795370100	4	
37	819141614	WASHER		1	
38	539115528	1/2` CONTACT BELLSPR		1	
39	539109554	WASH USS FLAT 1/2	For all EXCEPT 96795370100	2	
39	819182212	WASHER	For 96795370100	2	
40	819191912	WASHER		2	
41	539991043	BUSHING	For all EXCEPT 96795370100, 967953702-00, 97045580100	10	
41	819211616	WASHER	For all EXCEPT 96795370100, 967953702-00, 97045580100	10	

For 96795370100, 967953702-00, 97045580100

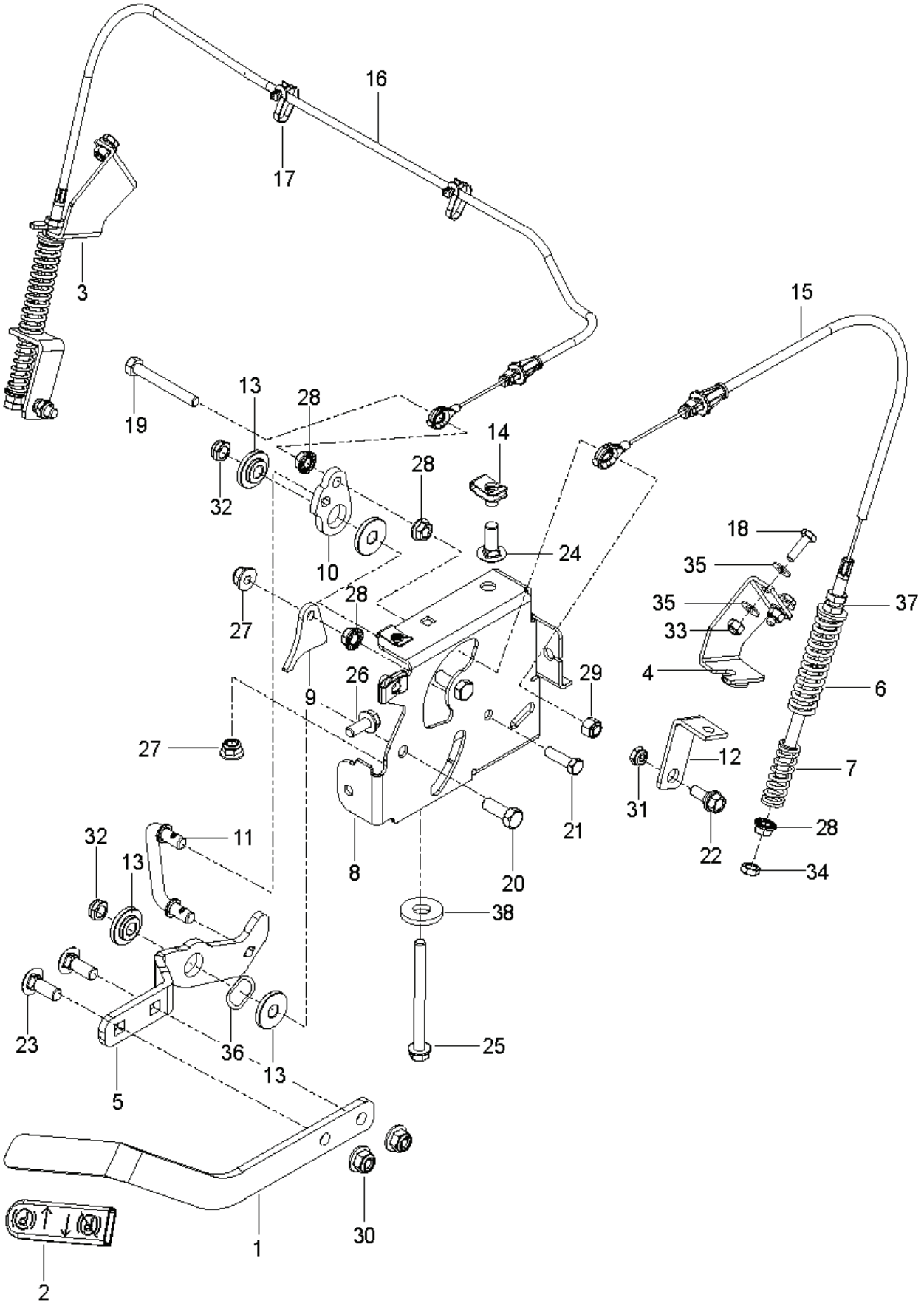

REF.	PART NO.	DESCRIPTION	REMARK	QTY.	KIT
1	539132151	ARM		1	
2	539105036	GRIP		1	
3	575229602	BRACKET		1	
4	575229702	BRACKET		1	
5	586738802	LEVER		1	
6	575230201	SPRING		2	
7	575230301	SPRING		2	
8	586830002	MOUNT		1	
9	539132154	ACTUATOR		1	
10	539132153	BELLCRANK		1	
11	539132424	LINKAGE. BRAKE		1	
12	575229802	BRACKET		2	
13	539132161	BUSHING		4	
14	539104763	CLIP		3	
15	582121801	CABLE ASSY		1	
16	582122001	CABLE ASSY		2	
17	505280001	TIE WRAP		2	
18	539990643	BOLT		4	
19	539108396	HCS 5/16-18X2-1/2 TPBLT GR5 ZD		1	
20	539990563	SCREW		2	
21	539990209	SCREW		1	
22	539110303	BOLT		2	
23	539990645	BOLT		2	
24	539990316	BOLT		1	
25	539131780	HHFS 5/16-18 X 3 3/4		1	
26	874490512	BOLT		1	
27	539112899	NUT. 5/16-18. NYLOC		2	
28	539990585	NUT		5	
29	539990717	NUT		1	
30	521996501	NUT		2	
31	539115617	5/16-18 THIN PROF NY		2	
32	539200282	NUT		2	
33	539976978	NUT		4	
34	539107897	NUT		2	
35	539990055	WASHER		8	
36	539133007	WASHER		1	
37	539990122	WASHER		2	
38	819182212	WASHER		1	
	532197802	SWITCH	NOT SHOWN	1	

For all EXCEPT 96795370100, 967953702-00, 97045580100

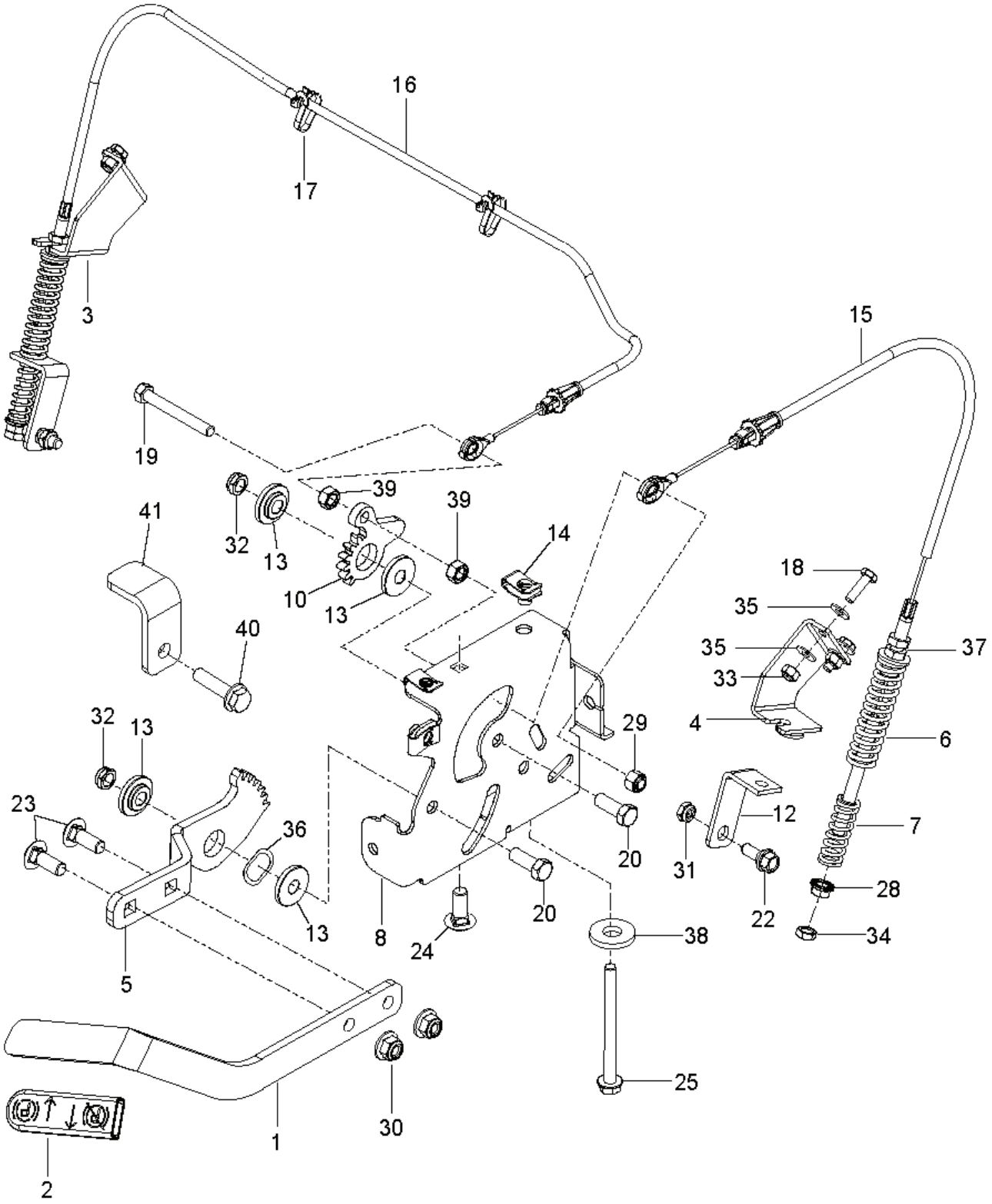

REF.	PART NO.	DESCRIPTION	REMARK	QTY.	KIT
1	593564002	ARM		1	
2	539105036	GRIP		1	
3	593279202	BRACKET		1	
4	593279902	BRACKET		1	
5	590337701	GEAR		1	
6	575230201	SPRING		2	
7	575230301	SPRING		2	
8	590631502	MOUNT		1	
10	590204501	GEAR		1	
12	575229802	BRACKET		2	
13	539132161	BUSHING		4	
14	539104763	CLIP		3	
15	582121801	CABLE ASSY		1	
16	582122001	CABLE ASSY		2	
17	505280001	TIE WRAP		2	
18	539990643	BOLT		4	
19	539108396	HCS 5/16-18X2-1/2 TPBLT GR5 ZD		1	
20	539990563	SCREW		2	
22	539110303	BOLT		2	
23	539990645	BOLT		2	
24	539990316	BOLT		1	
25	539131780	HHFS 5/16-18 X 3 3/4		1	
28	539990585	NUT		5	
29	539990717	NUT		1	
30	521996501	NUT		2	
31	539115617	5/16-18 THIN PROF NY		2	
32	539200282	NUT		2	
33	539976978	NUT		4	
34	539107897	NUT		2	
35	539990055	WASHER		8	
36	539133007	WASHER		1	
37	539990122	WASHER		2	
38	819182212	WASHER		1	
39	539990196	NUT		1	
40	525544001	BOLT		1	
41	596018303	BRACKET		1	