Z 254F

SPARE PARTS LIST

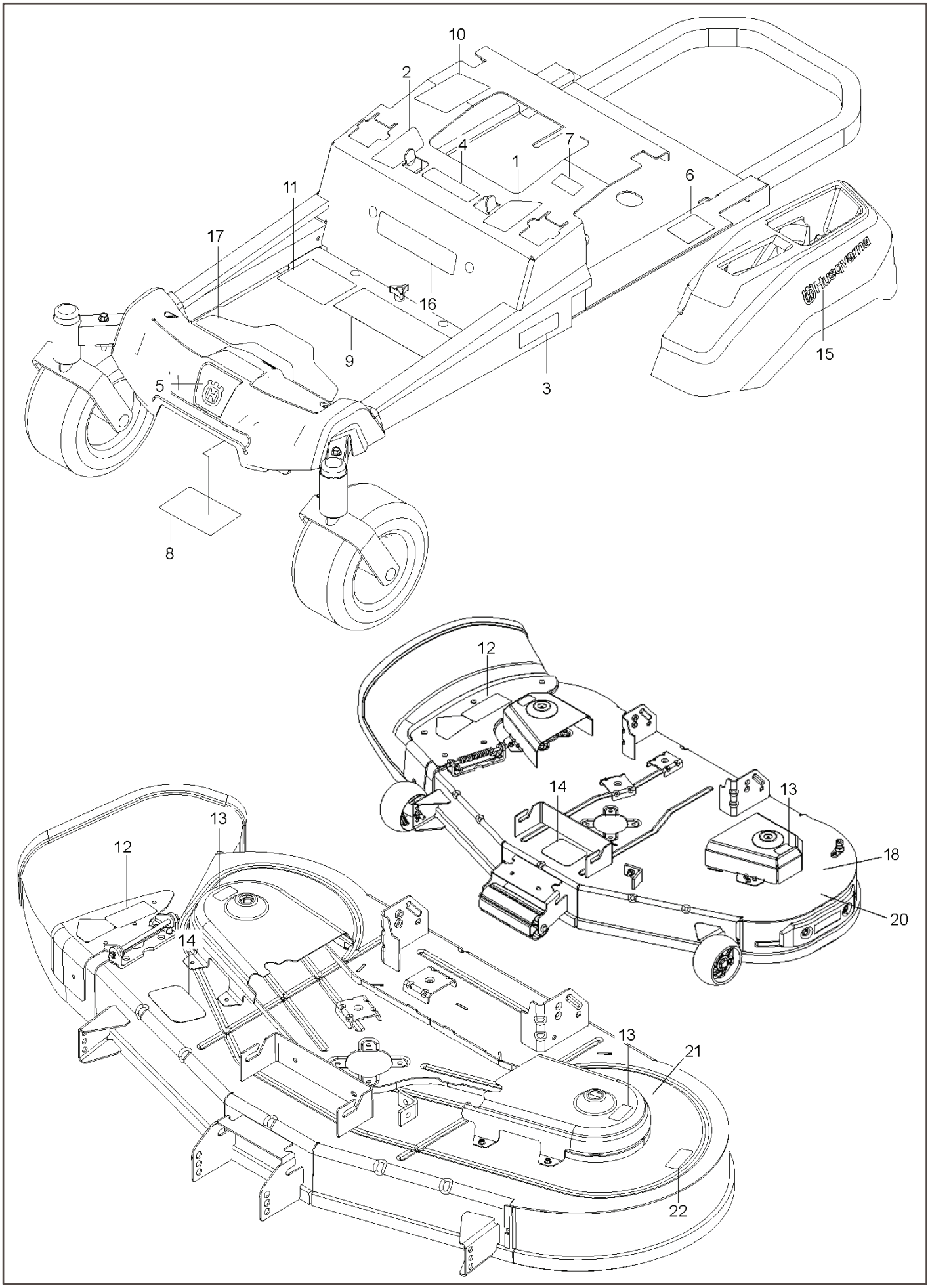
10
2
4
7
1
6
11
17
16
9
3
15
5
8
12
14
13
18
20
12
13
14
13
21
22

REF.	PART NO.	DESCRIPTION	REMARK	QTY.	KIT
1	587595601	DECAL		1	
2	587595501	DECAL		1	
3	592869901	DECAL		2	
4	539105745	DECAL		1	
5	532428677	DECAL	For 967680901-00, 967681001-00, 967844901-00, 967681002-00, 970459001-00, 970459001-01	1	
6	539108385	DECAL		1	
7	539108386	DECAL		1	
8	539109897	DECAL		1	
9	590485501	DECAL		1	
10	532423829	DECAL		1	
11	588035001	DECAL	For 967680901-00, 967681001-00, 967844901-00, 967681002-00, 970459001-00, 970459001-01	1	
11	588035101	DECAL	For 967954002-00, 96784490101, 96795400300, 96784490102	1	
11	591357301	DECAL	For 96795400100, 967954001-01	1	
12	586978801	DECAL		1	
13	589357901	DECAL		1	
14	591163901	DECAL		1	
15	577469001	DECAL		2	
16	591357301	DECAL	For 96795400100, 967954001-01	1	
17	587000701	PAD		1	
18	592898301	DECAL	For 96784490101, 96784490102	1	
20	593808801	DECAL	For 96784490101, 96784490102	1	
21	592898301	DECAL	For 96784490101, 96784490102	1	
22	593808801	DECAL	For 96784490101, 96784490102	1	

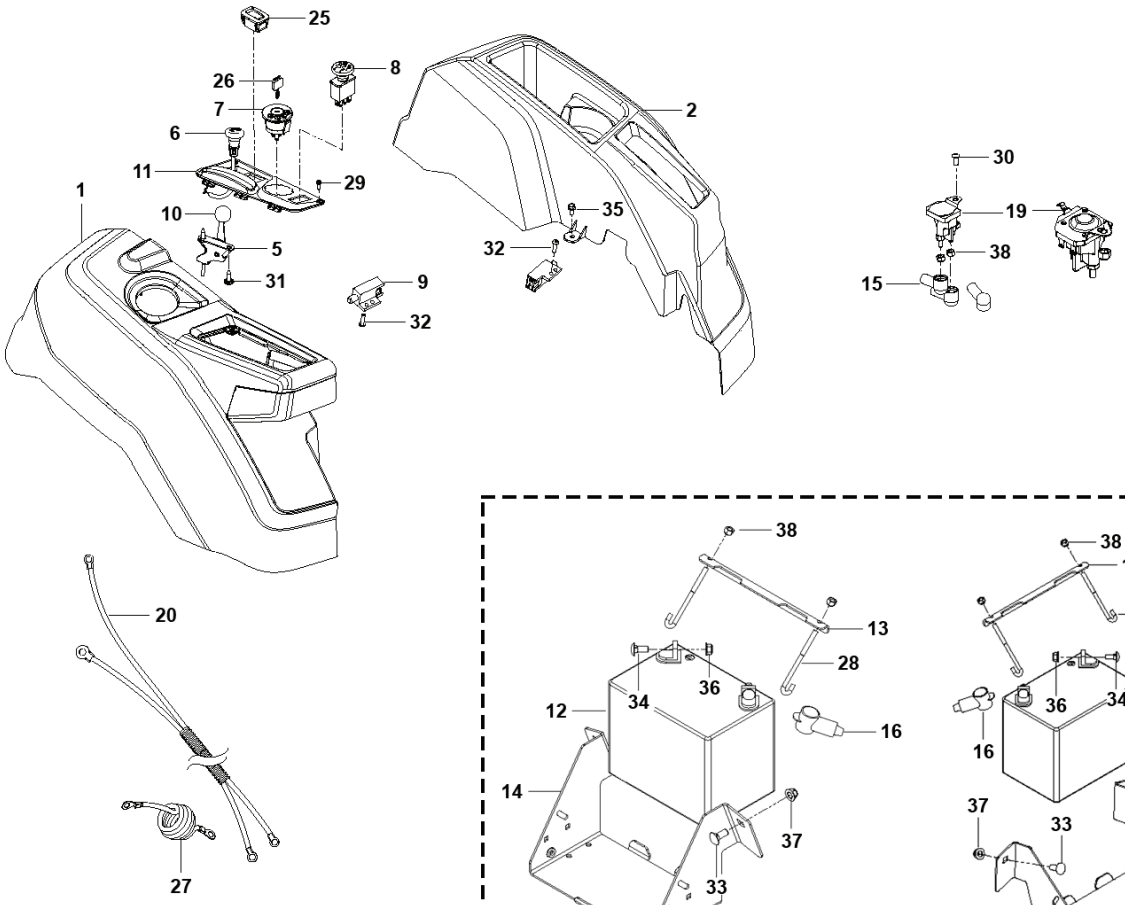
25
26
8
7
6
11
29
1
10
5
31
9
32
2
35
32
30
19
38
15
20
27
38
13
28
12
34
36
16
14
37
33
38
13
28
36
34
12
16
37
14
33
4
21
17
23
3
18
22
24
4
17
23
21
3
18
42
40
43
22
24
41

REF.	PART NO.	DESCRIPTION	REMARK	QTY.	KIT
1	585522801	CONSOLE ASSY		1	
1	598602606	CONSOLE ASSY	For	1	
2	586621203	CONSOLE ASSY	For	1	
2	586621201	CONSOLE ASSY		1	
3	589924702	FUEL TANK ASSY	Fits 2.75" filler neck. For 967680901-00, 967681001-00, 967681002-00, 970459001-00, 970459001-01	1	22, 23, 24
4	531016702	FUEL TANK ASSY	For	1	
4	585124801	FUEL CAP ASSY	Fits 2.75" filler neck. For 967680901-00	1	22, 23, 24
4	529989702	CAP	Fits 2.00" filler neck	1	
5	585974902	CABLE	For 967680901-00	1	
5	539102732	THROTTLE	For 967844901-00, 96784490101, 96784490102	1	
5	539112438	THROTTLE CABLE	For all EXCEPT 967680901-00, 967844901-00, 96784490101, 96784490102	1	
6	586881501	CHOKE CONTROL ASSY	For 967681001-00, 967681002-00, 967954002-00, 96795400100, 96795400300, 970459001-00, 967954001-01, 970459001-01	1	
6	586881502	CHOKE CONTROL ASSY	For 967844901-00, 96784490101, 96784490102	1	
7	539107541	IGNITION SWITCH		1	
8	582107602	SWITCH		1	
9	587601501	SWITCH	For 967681001-00, 967681002-00, 970459001-00, 970459001-01	2	
10	539133049	KNOB ROUND BALL	For all EXCEPT 967954002-00, 96795400100, 96795400300, 967954001-01	1	
11	585522703	CONTROL PANEL	For 967680901-00	1	
11	585522709	CONTROL PANEL	For	1	
11	585522701	CONTROL PANEL	For all EXCEPT 967680901-00	1	
12	579411601	BATTERY		1	
13	510030003	BRACKET		1	
14	582609602	BOX		1	
15	532131563	COVER		3	
16	539102759	INSULATOR		1	
17	576618101	TANK VENT		1	
18	586123904	FUEL HOSE	For 967680901-00, 96784490101, 96784490102	1	40, 41, 42, 43
18	586123906	FUEL HOSE	For 967681001-00, 967681002-00, 970459001-00, 970459001-01	1	
19	582042801	SOLENOID		1	
20	587198601	HARNESS		1	
21	587044518	HOSE	For 967680901-00	1	
21	587044531	HOSE	For 967844901-00	1	
21	587044529	HOSE	For 96784490101, 96784490102	1	
21	587044550	HOSE	For all EXCEPT 967680901-00, 967844901-00, 96784490101, 96784490102	1	
22	532003645	BUSHING		1	
23	532437492	GROMMET		1	
24	532139277	NIPPLE		1	
25	586161801	HOUR METER		1	

REF.	PART NO.	DESCRIPTION	REMARK	QTY.	KIT
26	532140401	KEY	For 967680901–00, 967681001–00, 967844901–00, 967681002–00, 970459001–00, 970459001–01	1	
26	532411933	KEY	For 967954002–00, 96784490101, 96795400100, 96795400300, 967954001–01, 96784490102	1	
27	586108201	HARNESS		1	
28	588839401	HOOK		2	
29	545227101	SCREW		2	
30	539111229	SCR 1/4–20 X 5/8 BTN SKT HD ZD		1	
31	532141841	SCREW	For 967954002–00, 96795400300	2	
32	574822701	SCREW	For 967681001–00, 967681002–00, 970459001–00, 970459001–01	2	
33	539990645	BOLT		2	
34	539990316	BOLT		2	
35	532141841	SCREW	For 967954002–00, 96795400300	2	
35	539990071	HCS ¼20 X ½ GR 5 ZD	For all EXCEPT 967954002–00, 96795400300	2	
36	539112899	NUT, 5/16–18, NYLOC		2	
37	521996501	NUT		2	
38	539976978	NUT		5	
40	539916325	VALVE	For all EXCEPT 967681001–00, 967681002–00, 970459001–00, 970459001–01	1	
41	532123487	HOSE CLAMP	For all EXCEPT 967681001–00, 967681002–00, 970459001–00, 970459001–01	4	
42	587044810	HOSE	For all EXCEPT 967681001–00, 967681002–00, 970459001–00, 970459001–01	1	
43	587044803	HOSE	For 96784490101, 96784490102	1	
43	587044818	HOSE	For 967680901–00, 967844901–00, 967954002–00, 96795400100, 96795400300, 967954001–01	1	
	586337301	HARNESS	NOT SHOWN	1	
	532109748	RELAY	NOT SHOWN	1	
	586548101	HARNESS	For all EXCEPT 967680901–00, 967844901–00. NOT SHOWN.	1	
	505280001	TIE WRAP	For all EXCEPT 967681001–00, 967681002–00, 970459001–00, 970459001–01. NOT SHOWN.	1	

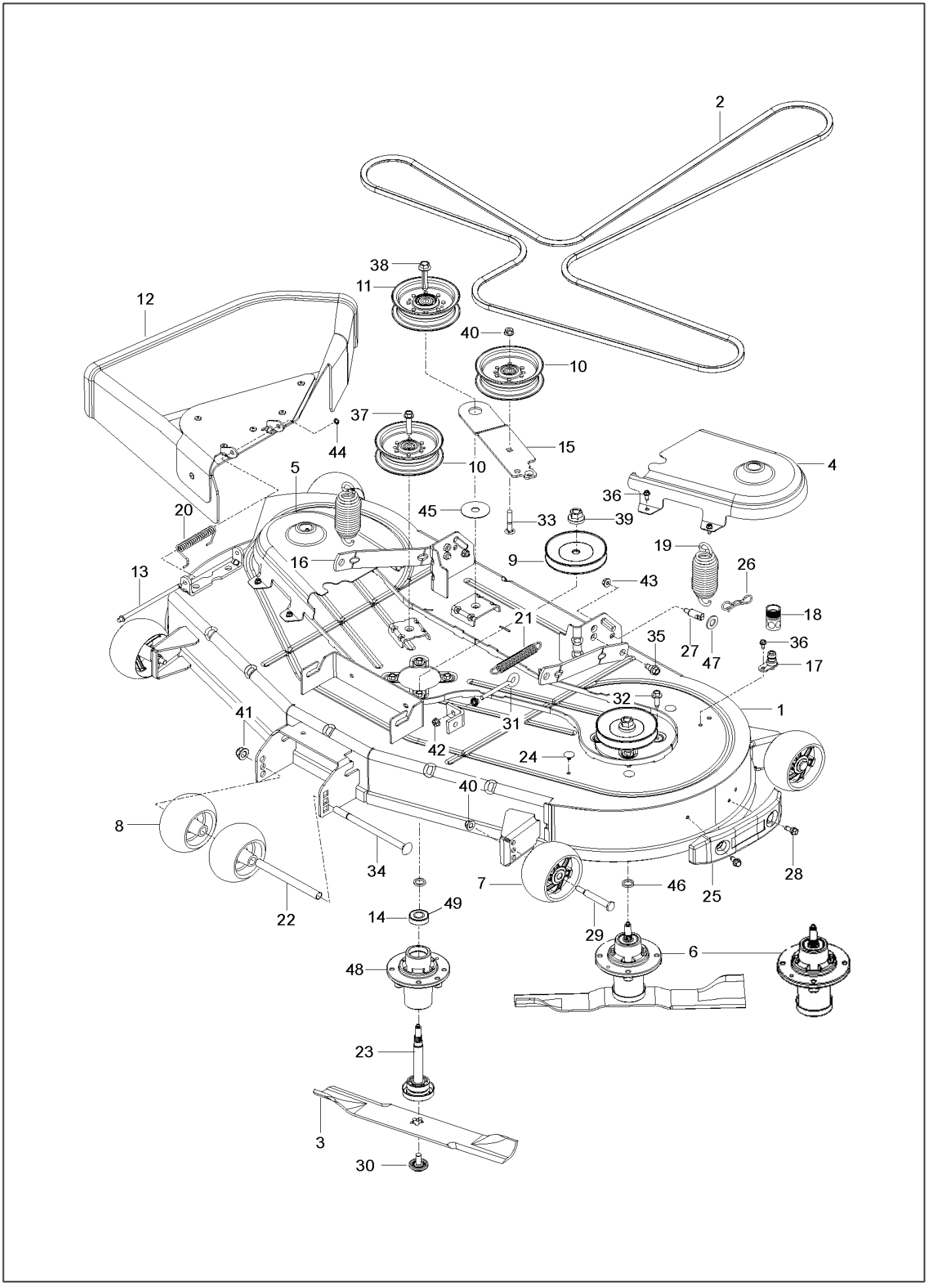
2
38
11
12
40
10
37
44
15
10
4
5
36
20
45
33
39
19
26
13
16
9
43
18
21
35
27
47
36
17
41
32
1
31
42
24
40
8
34
28
7
46
25
22
49
14
29
6
48
23
3
30

REF.	PART NO.	DESCRIPTION	REMARK	QTY.	KIT
1	591120001	SERVICE KIT	For 967954002–00, 96795400300	1	
1	596671005	DECK SHELL ASSY	For	1	
1	582359102	DECK SHELL ASSY	For all EXCEPT 967954002–00, 96795400300	1	
2	592951801	BELT		1	
3	582760502	BLADE		3	
4	590304403	COVER		1	
4	590304407	COVER	For	1	
5	590304207	COVER	For	1	
5	590304203	COVER		1	
6	539131898	SPINDLE		3	14, 23
7	589527301	WHEEL		4	
8	574169601	ROLLER		2	
9	532175708	PULLEY ASSY		3	
10	532197379	PULLEY		2	
11	532197380	PULLEY		1	
12	590632204	DEFLECTOR ASSY	For	1	
12	590632201	DEFLECTOR ASSY		1	
13	532131491	SHAFT		1	
14	532110485	BEARING		1	
15	582219602	ARM		1	
16	587140502	ARM		2	
17	532415598	HOSE COUPLING		1	
18	532416405	COUPLING		1	
19	539118762	SPRING		2	
20	587354701	SPRING		1	
21	587358401	SPRING		1	
22	574196501	TUBE		1	
23	532187291	SHAFT		1	
24	589813301	PLUG		3	
25	590732501	BUMPER ASSY		1	
26	532194209	SPRING		2	
27	532195161	STUD		2	
28	532170165	BOLT		2	
29	532193406	BOLT		4	
30	532193003	SCREW		3	
31	539115574	EYE BOLT		1	
32	584953901	BOLT		12	
33	872110616	BOLT		1	
34	872140864	BOLT		1	
35	532196539	BOLT		2	
36	532137729	SCREW		9	
37	817490628	SCREW		1	
38	588438301	SCREW		1	
39	532400234	NUT		3	
40	873900600	NUT		5	
41	521991101	NUT		1	
42	539990585	NUT		2	
43	873900500	NUT		2	
44	532110452	NUT		1	
45	532178515	WASHER		1	
46	532187690	WASHER	For 96784490101, 96784490102	3	
47	819191912	WASHER		2	
48	539131767	MANDREL. HOUSING - CAST IRON	For 967954002–00, 96784490101, 96795400300, 96784490102	1	
49	532187690	WASHER	For 96784490101, 96784490102	3	

For all EXCEPT 967680901-00, 967954002-00, 96795400100, 967954001-01

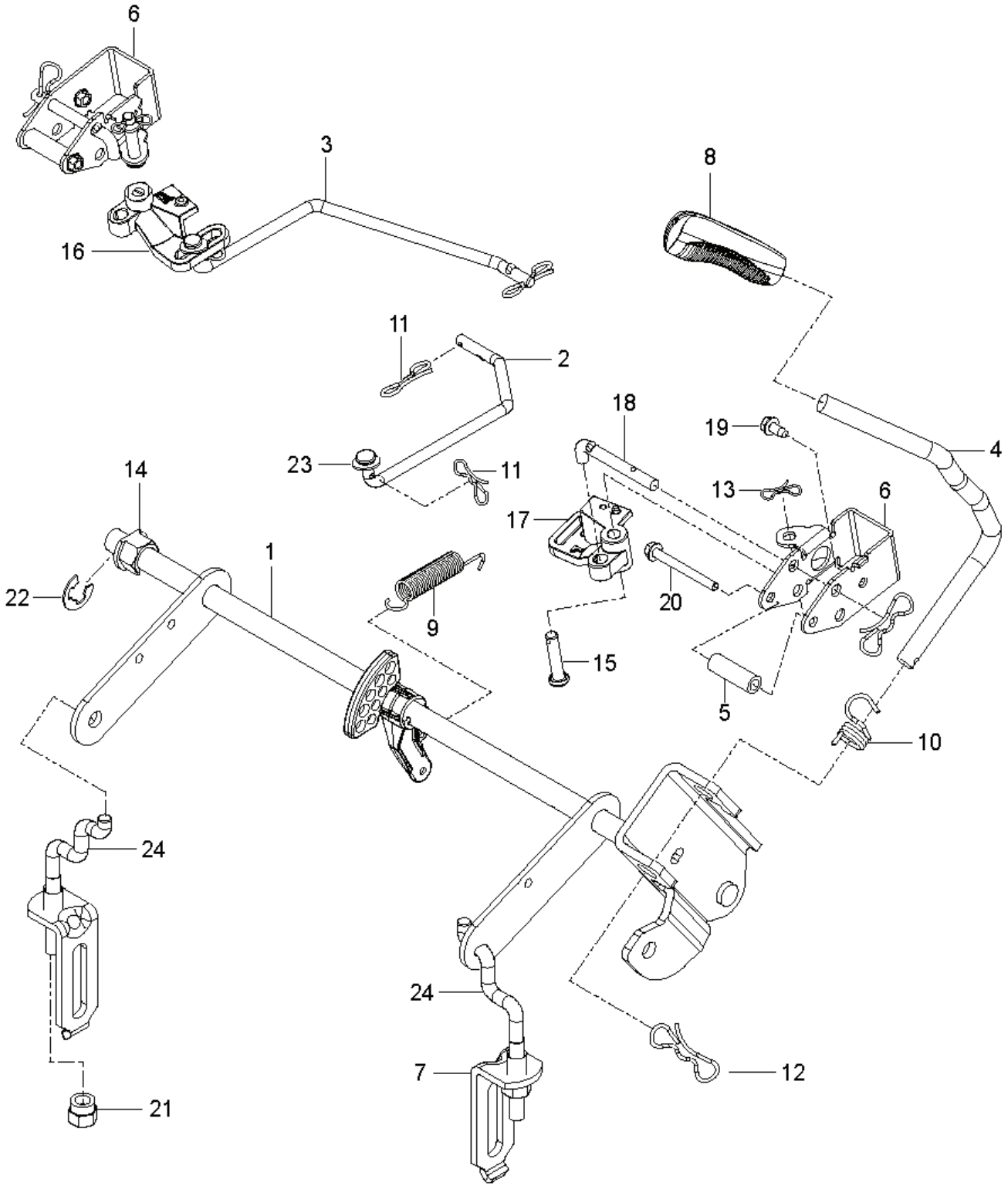

REF.	PART NO.	DESCRIPTION	REMARK	QTY.	KIT
1	587623101	SHAFT ASSY	For 967681001–00, 967844901–00, 967681002–00, 970459001–00, 970459001–01	1	14, 22
1	586429702	SHAFT ASSY	For 96784490101, 96795400300, 96784490102	1	14, 22
2	586457101	LINK		1	
3	586457201	LINK		1	
4	587622901	LIFTING LEVER ASSY	For 967681001–00, 967844901–00, 967681002–00, 970459001–00, 970459001–01	1	8, 10, 12
4	586428701	HANDLE	For 96784490101, 96795400300, 96784490102	1	8, 10, 12
5	580486101	SPACER		2	
6	585682102	BRACKET		2	
7	587623001	LINK ASSY	For 967681001–00, 967844901–00, 967681002–00, 96784490101, 970459001–00, 96784490102, 970459001–01	2	21
7	522858601	ASSEMBLY	For 96795400300	2	21
8	532411555	GRIP		1	
9	586867601	SPRING		1	
10	532196314	SPRING		1	
11	587225301	PIN		4	
12	532194209	SPRING		3	
13	532194208	PIN		2	
14	510184901	BUSHING		2	
15	585701401	PIN		2	
16	586457501	BELLCRANK		1	
17	586457401	BELLCRANK		1	
18	585682001	ROD		2	
19	532137729	SCREW		2	
20	586561301	SCREW		2	
21	532175994	NUT		2	
22	812000002	RETAINER RING		1	
23	819131316	WASHER		2	
24	525847201	LINK	For 96795400300	1	

For 967844901-00, 967954002-00, 96784490101, 96795400100, 96795400300, 970459001-00, 96784490102

*OPTIONAL

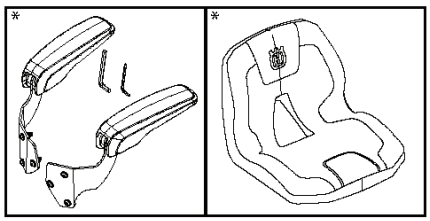

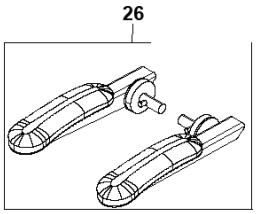

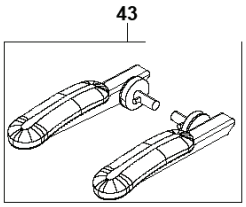

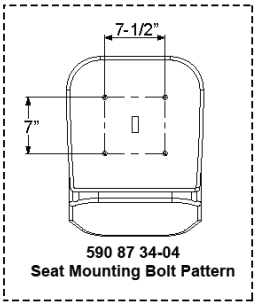

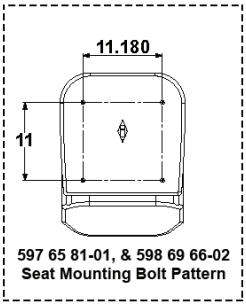

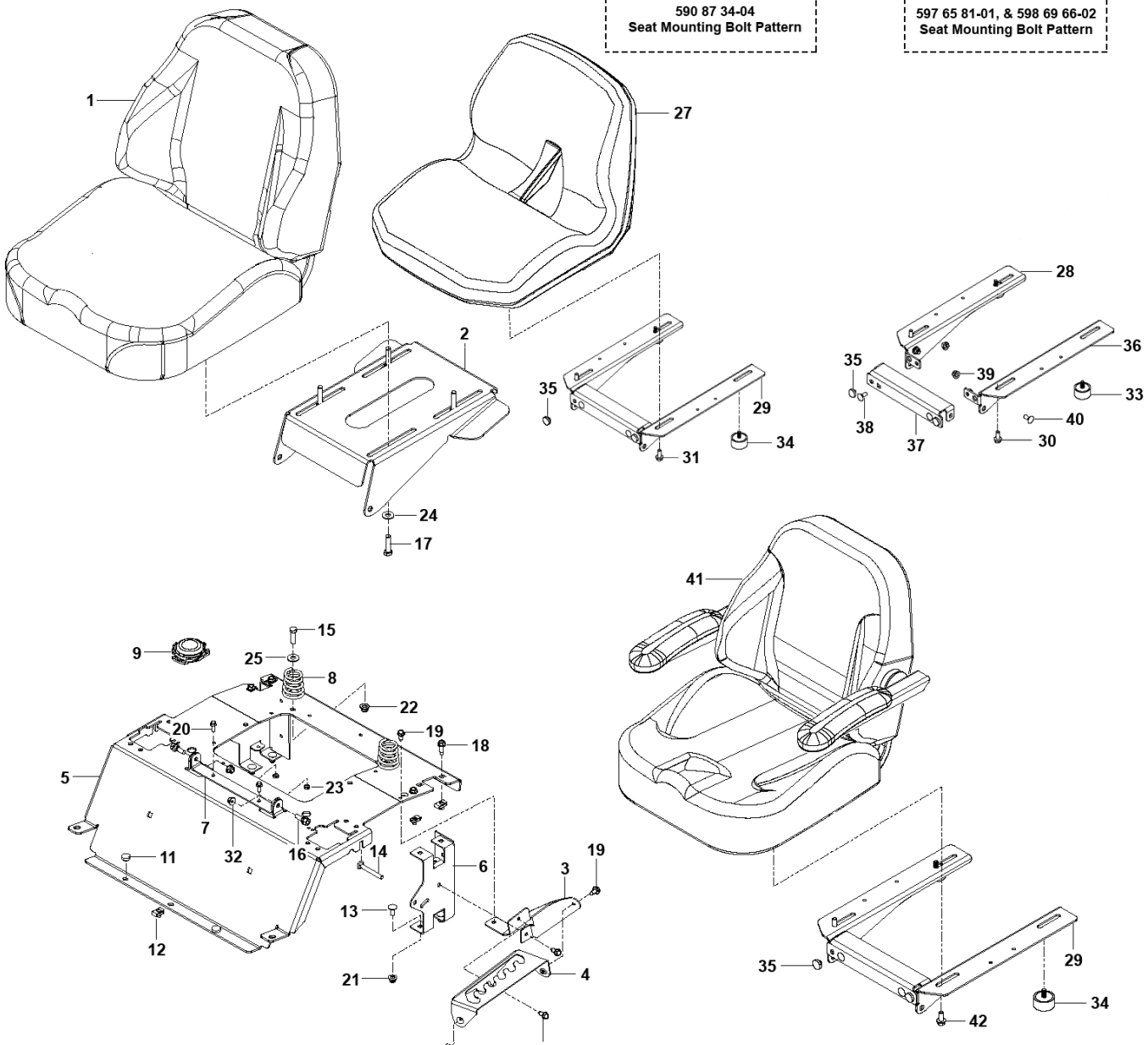

REF.	PART NO.	DESCRIPTION	REMARK	QTY.	KIT
1	590873408	SEAT	For 967844901–00	1	8
1	590873404	SEAT	For 96784490101, 96784490102	1	8
2	590856002	PAN	For 967844901–00, 96784490101, 96784490102	1	
3	586220802	SUPPORT PLATE		1	
4	586221202	PLATE		1	
5	589761206	PLATE	For 967844901–00, 96795400100, 970459001–00	1	
5	589761211	PLATE	For 967954002–00, 96784490101, 96795400300, 96784490102	1	
6	580308202	SUPPORT		2	
7	590899903	BRACKET	For 967844901–00, 967954002–00, 96795400100, 96795400300, 970459001–00	2	
7	590899902	BRACKET	For 96784490101, 96784490102	1	
8	589483501	SPRING	For 967844901–00, 96784490101, 970459001–00, 96784490102	2	
9	532401545	SWITCH	For 967844901–00, 96784490101, 96784490102	1	
9	532192749	SWITCH.SEAT.DP W/RAMPS	For 967954002–00, 96795400100, 96795400300, 970459001–00	1	
10	586428601	SUPPORT LEG		1	
11	585989301	BUMPER		2	
12	539104763	CLIP		5	
13	539990316	BOLT	For 967954002–00	4	
14	592858702	BOLT	For 96784490101, 96784490102	2	
14	510422701	SCREW	For 967844901–00, 96784490101, 970459001–00, 96784490102	2	
15	874780620	BOLT	For 967844901–00, 96784490101, 970459001–00, 96784490102	2	
16	596231101	BOLT	For 967844901–00, 96784490101, 96784490102	2	
16	539990316	BOLT	For 967954002–00	2	
16	539110303	BOLT	For 96795400100, 96795400300, 970459001–00	2	
17	874780520	BOLT	For 967844901–00, 96784490101, 96784490102	4	
18	817490512	SCREW	For 967844901–00, 967954002–00, 96784490101, 96795400300, 96784490102	4	
18	874490512	BOLT	For 96795400100, 96795400300	4	
19	817000510	BOLT		6	
20	589028501	SCREW	For 967954002–00	2	
21	539112899	NUT, 5/16–18, NYLOC	For 967844901–00, 967954002–00, 96784490101, 96795400300, 970459001–00, 96784490102	4	
22	521996501	NUT	For 967844901–00, 96784490101, 96784490102	2	
22	586668901	NUT	For 970459001–00	2	
23	532050675	NUT	For 967844901–00, 96784490101, 96784490102	2	
24	819111116	WASHER	For 967844901–00, 96784490101, 96784490102	4	

REF.	PART NO.	DESCRIPTION	REMARK	QTY.	KIT
25	819141614	WASHER	For 967844901–00, 96784490101, 970459001–00, 96784490102	2	
26	590873402	SEAT	For 967844901–00. ARM REST KIT - NOT SHOWN.	1	
27	597658101	SEAT	For 967954002–00, 96795400100, 96795400300, 970459001–00	1	9
28	596679402	BRACKET	For 967954002–00, 96795400100, 96795400300	1	
29	596992703	BRACKET	For 96784490101, 970459001–00, 96784490102	1	
30	596030501	SCREW	For 967954002–00	4	
30	874490512	BOLT	For 96795400100, 96795400300	4	
31	874490512	BOLT	For 96795400100, 96795400300	4	
32	539112899	NUT, 5/16–18, NYLOC	For 967844901–00, 967954002–00, 96784490101, 96795400300, 970459001–00, 96784490102	2	
32	873900400	NUT	For 96795400100	2	
33	582478701	BUMPER	For 967954002–00, 96795400100	2	
33	582478702	BUMPER	For 96784490101, 970459001–00, 96784490102	2	
34	582478702	BUMPER	For 96784490101, 970459001–00, 96784490102	2	
35	539102587	ABSORBER	For 967954002–00, 96784490101, 96795400100, 96795400300, 970459001–00, 96784490102	2	
36	596672902	BRACKET	For 967954002–00, 96795400100, 96795400300	1	
37	596673002	BRACKET	For 967954002–00, 96795400100, 96795400300	1	
38	539990316	BOLT	For 967954002–00	4	
39	539112899	NUT, 5/16–18, NYLOC	For 967844901–00, 967954002–00, 96784490101, 96795400300, 970459001–00, 96784490102	4	
40	589028501	SCREW	For 967954002–00	1	
41	598696602	SEAT	For 96784490101, 96784490102	1	
42	592858702	BOLT	For 96784490101, 96784490102	2	
43	590873402	SEAT	For 967844901–00. ARM REST KIT - NOT SHOWN.	1	
	597658203	SERVICE KIT	For 967954002–00, 96795400300, 970459001–00. ARMREST OPTION.	1	
	597959401	COVER	For 967954002–00, 96795400300, 970459001–00. SEAT COVER OPTION.	1	
	590873402	SEAT	For 967844901–00. ARM REST KIT - NOT SHOWN.	1	
	532421499	ARM REST	For 96795400100. OPTIONAL.	1	

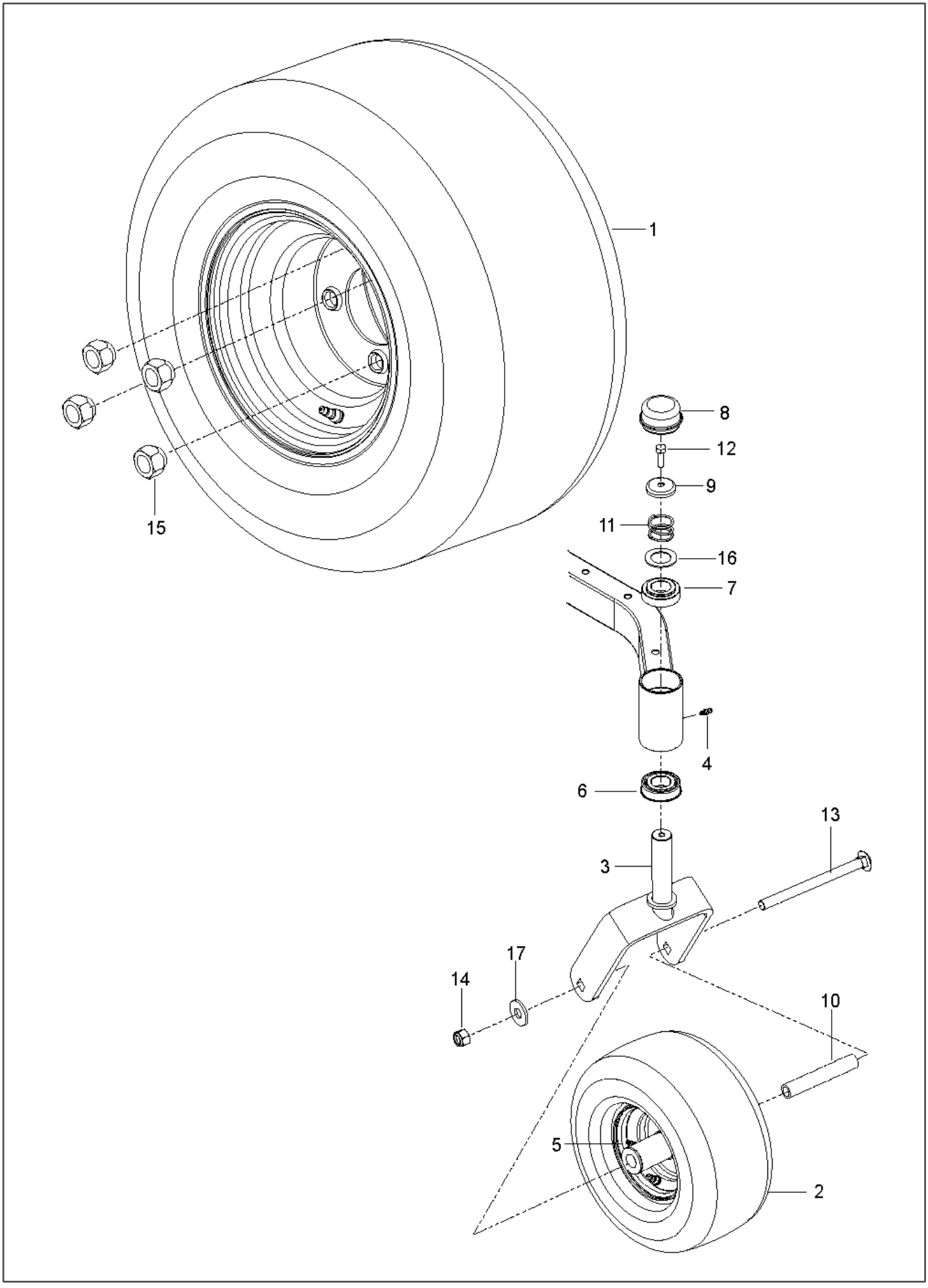
1
15
8
12
9
11
16
7
4
6
13
3
17
14
10
5
2

REF.	PART NO.	DESCRIPTION	REMARK	QTY.	KIT
1	579753401	WHEEL ASSY	For 967680901−00, 967681001−00, 967844901−00, 967681002−00, 970459001−00, 970459001−01	2	
1	536995401	WHEEL ASSY	For	2	
2	580830801	WHEEL ASSY	For	2	
1	590486601	WHEEL	For 967954002−00, 96784490101, 96795400100, 96795400300, 967954001−01, 96784490102	2	
2	576588602	WHEEL ASSY		2	
3	586650310	YOKE	For	1	
3	586650302	YOKE		2	
4	539115638	FITTING		2	
5	539103300	NIPPLE	For 967680901−00, 967681001−00, 967844901−00, 967681002−00, 970459001−00, 970459001−01	2	
6	539112660	BEARING		2	
7	539117901	BUSHING		2	
8	539102535	CAP		2	
9	539115749	CASTER PLUG		2	
10	585995401	SPACER		2	
11	539115747	SPRING		2	
12	874950516	SCREW		2	
13	576601501	SCREW		2	
14	873930800	NUT		2	
14	521991103	NUT	For	2	
15	539101173	NUT	For 96795400300	8	
15	587653902	NUT	For all EXCEPT 96795400300	8	
16	539115675	WASHER		2	
17	819182212	WASHER		2	

For 967680901-00, 967954002-00, 96795400100, 967954001-01

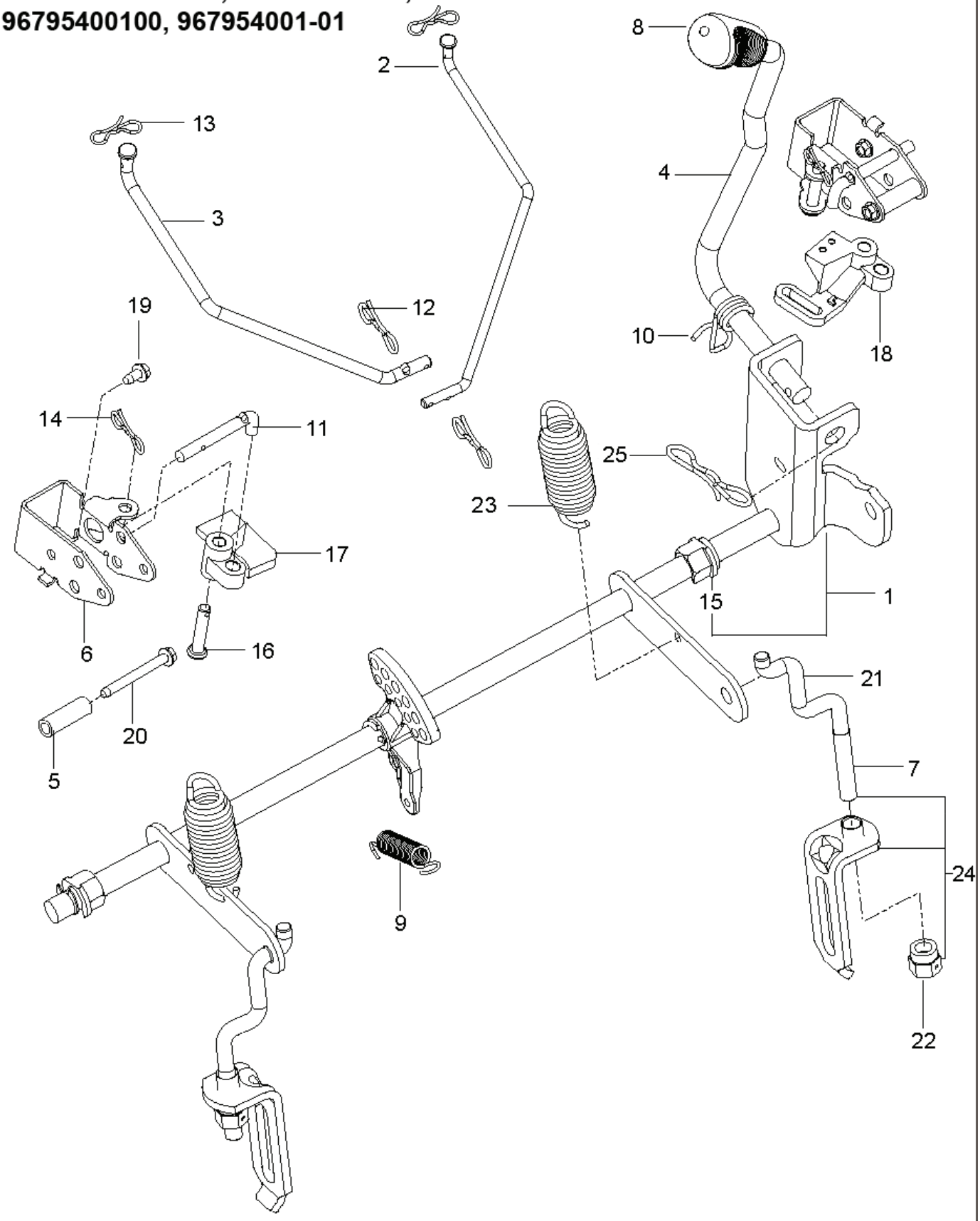

REF.	PART NO.	DESCRIPTION	REMARK	QTY.	KIT
1	587623101	SHAFT ASSY	For 967680901–00	1	
1	586429702	SHAFT ASSY	For 967954002–00, 96795400100, 967954001–01	1	14, 22
2	586457101	LINK		1	
3	586457201	LINK		1	
4	587622901	LIFTING LEVER ASSY	For 967680901–00	1	8, 10, 13, 14
4	586428701	HANDLE	For 967954002–00, 96795400100, 967954001–01	1	8, 10, 12
5	580486101	SPACER		2	
6	585682102	BRACKET		2	
7	522858601	ASSEMBLY	For 967954002–00, 96795400100, 967954001–01	2	
8	532411555	GRIP		1	
9	586867601	SPRING		1	
10	532196314	SPRING		1	
11	586457501	BELLCRANK	For 967680901–00	1	
11	585682001	ROD	For 967954002–00, 96795400100, 967954001–01	2	
12	587225301	PIN		4	
13	532194209	SPRING	For 967680901–00, 967954002–00	2	
14	532194209	SPRING	For 967680901–00, 967954002–00	2	
14	532194208	PIN	For 967680901–00, 967954002–00	2	
15	510184901	BUSHING		2	
16	585701401	PIN		2	
17	586457501	BELLCRANK	For 967680901–00	1	
18	586457401	BELLCRANK		1	
19	532137729	SCREW		2	
20	586561301	SCREW		2	
21	525847201	LINK	For 967954002–00, 96795400100, 967954001–01	2	
22	532175994	NUT	For 967954002–00, 96795400100, 967954001–01	1	
23	539118762	SPRING	For 967680901–00	1	
24	587623001	LINK ASSY	For 967680901–00	2	
25	532194209	SPRING	For 967680901–00, 967954002–00	2	
25	532194208	PIN	For 967680901–00, 967954002–00	2	

For 967680901-00, 967681001-00, 967681002-00, 967954001-01, 96784490102, 970459001-01

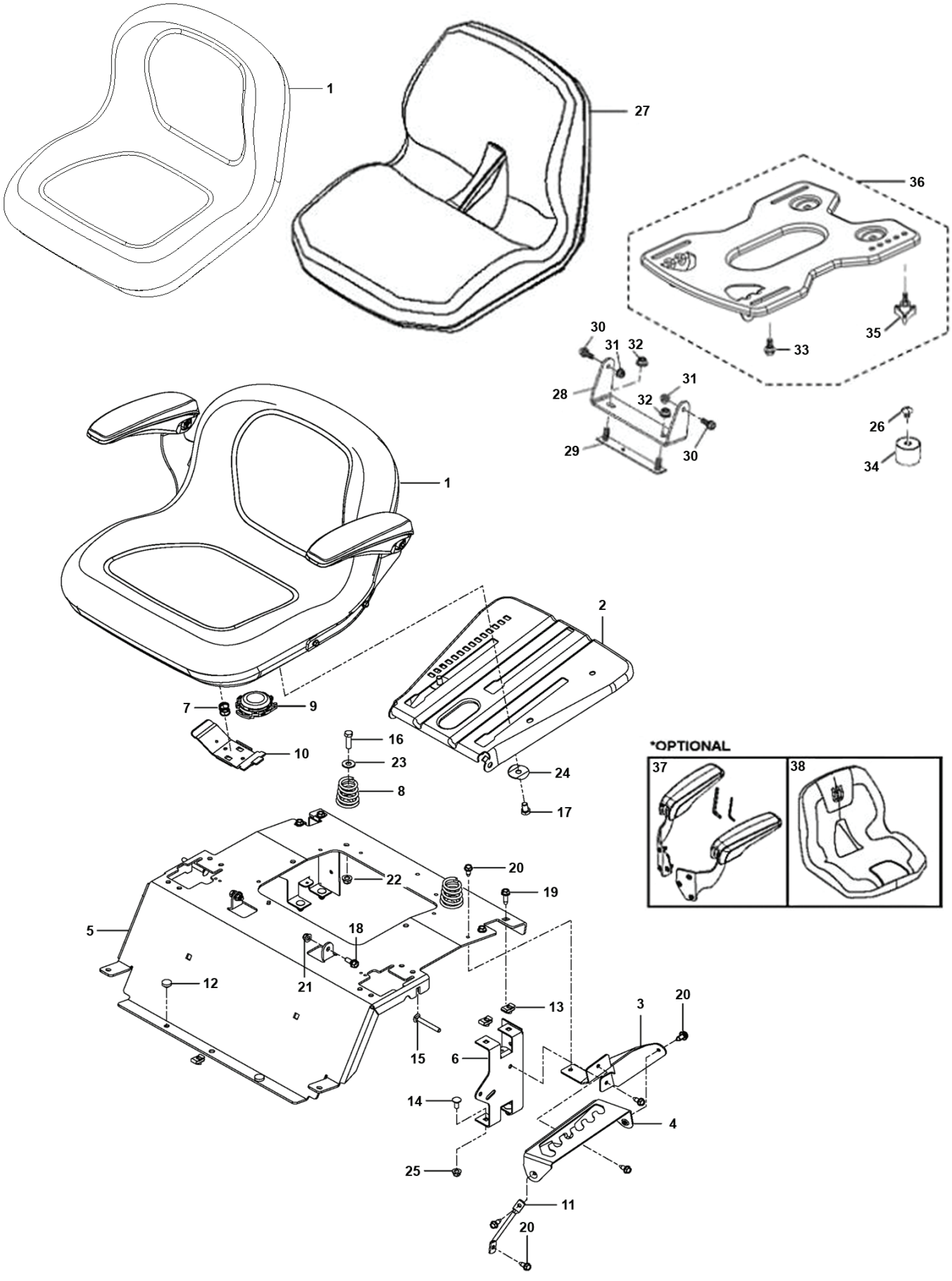

REF.	PART NO.	DESCRIPTION	REMARK	QTY.	KIT
1	532439822	SEAT	For 967680901–00, 967681001–00, 967681002–00	1	9
1	536178201	SEAT	for 96784490200	1	
2	597298202	BRACKET	Fits 967954001–01, 970459001–01	1	
2	587232002	PLATE	For 967680901–00, 967681001–00, 967681002–00	1	
3	586220802	SUPPORT PLATE		1	
4	586221202	PLATE		1	
5	589761206	PLATE	For 967680901–00, 967681001–00, 967681002–00	1	
5	597160003	PLATE	For 967954001–01, 96784490102, 970459001–01	1	
6	580308202	SUPPORT		2	
7	532198200	SPRING	For 967680901–00, 967681001–00, 967681002–00	1	
8	589483501	SPRING	For 967680901–00, 967681001–00, 967681002–00	2	
9	581429302	SWITCH	For 967680901–00, 967681001–00	1	
9	532401545	SWITCH	For 967681002–00	1	
9	532192749	SWITCH,SEAT,DP W/RAMPS	For 967954001–01, 96784490102, 970459001–01	1	
10	532197661	HANDLE	For 967680901–00, 967681001–00, 967681002–00	1	
11	586428601	SUPPORT LEG		1	
12	585989301	BUMPER		2	
13	539104763	CLIP		5	
14	539990316	BOLT		4	
15	510422701	SCREW		2	
16	874780620	BOLT	For 967680901–00, 967681001–00, 967681002–00	2	
17	874760612	BOLT	For 967680901–00, 967681001–00, 967681002–00	1	
18	539110303	BOLT	For 967680901–00, 967681001–00, 967681002–00	2	
19	817490512	SCREW	For 967680901–00, 967681001–00, 967681002–00	4	
19	874490512	BOLT	For 967954001–01, 96784490102, 970459001–01	4	
20	817000510	BOLT		6	
21	539112899	NUT, 5/16–18, NYLOC	For 967680901–00, 967681001–00, 967681002–00	4	
22	521996501	NUT	For 967680901–00, 967681001–00, 967681002–00	2	
23	819141614	WASHER	For 967680901–00, 967681001–00	2	
23	501051801	WASHER	For 967680901–00, 967681001–00	1	
24	501051801	WASHER	For 967680901–00, 967681001–00	2	
24	819141614	WASHER	For 967680901–00, 967681001–00	2	
25	539112899	NUT, 5/16–18, NYLOC	For 967680901–00, 967681001–00, 967681002–00	4	
26	597869301	BOLT	For 967954001–01, 96784490102, 970459001–01	2	
27	597658101	SEAT	For 967954001–01, 96784490102, 970459001–01	1	
27	536178101	SEAT	For 96795400600	1	
28	597330002	BRACKET	For 967954001–01, 96784490102, 970459001–01	1	
29	590777602	BRACKET	For 967954001–01, 96784490102, 970459001–01	1	

REF.	PART NO.	DESCRIPTION	REMARK	QTY.	KIT
30	596240701	BOLT	For 967954001–01, 96784490102, 970459001–01	1	
31	594944401	NUT	For 967954001–01, 96784490102, 970459001–01	2	
32	521996502	NUT	For 967954001–01, 96784490102, 970459001–01	2	
33	597781801	BOLT	For 967954001–01, 96784490102, 970459001–01	2	
34	597553401	BUMPER	For 967954001–01, 96784490102, 970459001–01	2	
35	597783101	KNOB	For 967954001–01, 96784490102, 970459001–01	2	
36	598001601	SERVICE KIT	For 967954001–01, 96784490102, 970459001–01	1	
37	597658203	SERVICE KIT	For 967954001–01, 96784490102, 970459001–01	1	
38	597959401	COVER	For 967954001–01, 96784490102, 970459001–01	1	
	588614202	ARM REST	For 967681002–00. RIGHT.	1	
	588614201	ARM REST	For 967681002–00. LEFT.	1	
	532421499	ARM REST	For 967680901–00, 967681001–00	1	

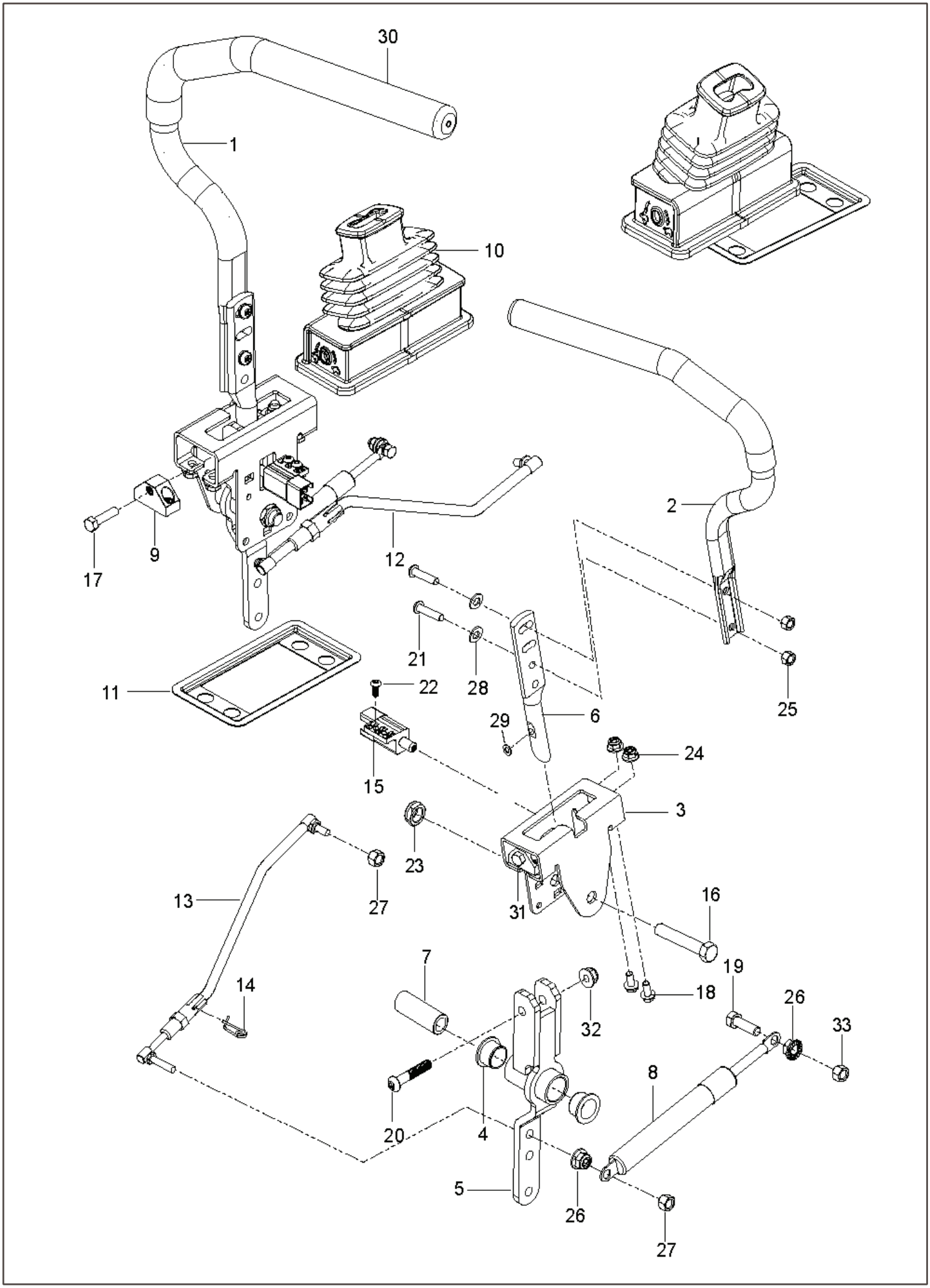
30
1
10
2
9
17
12
21
28
25
11
22
6
29
24
15
3
23
27
13
31
16
7
14
18
19
26
33
32
8
20
4
5
26
27

REF.	PART NO.	DESCRIPTION	REMARK	QTY.	KIT
1	598851703	TUBE	For 967954001–01, 970459001–01	1	
1	590090803	TUBE	W/ GRIP	1	
2	590090804	TUBE	W/ GRIP	1	
3	585124705	BRACKET		2	
4	539131518	BEARING		4	
5	576140301	LEVER		2	
6	587601704	LEVER	For 970459001–00, 970459001–01	2	
6	587601702	LEVER	For all EXCEPT 970459001–00, 970459001–01	2	
7	584927201	SPACER		2	
8	539102720	GAS SPRING		2	
9	581437502	BLOCK	For 970459001–00, 970459001–01	2	
9	581437501	BLOCK	For all EXCEPT 970459001–00, 970459001–01	2	
10	585831601	BOOT		2	
11	585488202	FLANGE		2	
12	588604902	ROD	For 970459001–00, 970459001–01	2	
12	588604901	ROD	For all EXCEPT 970459001–00, 970459001–01	2	14
13	588605002	ROD	For 970459001–00, 970459001–01	2	
13	588605001	ROD	For all EXCEPT 970459001–00, 970459001–01	2	14
14	532199849	SPRING RETAINER		2	
15	587601501	SWITCH	For all EXCEPT 967680901–00, 967681001–00, 967844901–00, 967681002–00	2	
16	596434301	BOLT	For 970459001–00, 970459001–01	2	
16	874780844	BOLT	For all EXCEPT 970459001–00, 970459001–01	2	
17	585986101	BOLT		2	
18	592858702	BOLT	For 970459001–00, 970459001–01	8	
18	874490512	BOLT	For all EXCEPT 970459001–00, 970459001–01	8	
19	596580801	BOLT	For 970459001–00, 970459001–01	2	
19	539990209	SCREW	For all EXCEPT 970459001–00, 970459001–01	2	
20	587885301	SCREW	For 967954002–00, 96795400300	2	
21	585985901	BOLT	For 967680901–00, 967681001–00, 967844901–00, 967681002–00	4	
22	586936001	SCREW	For 967954002–00, 96784490101, 96795400100, 96795400300, 967954001–01, 96784490102	2	
22	574822701	SCREW	For 970459001–00, 970459001–01	2	
23	539108010	NUT		2	
24	594944401	NUT	For 970459001–00, 970459001–01	10	
24	539112899	NUT, 5/16–18, NYLOC	For 967680901–00, 967681001–00, 967844901–00, 967681002–00	10	
25	596583702	NUT	For 970459001–00, 970459001–01	4	
25	585986001	NUT	For all EXCEPT 970459001–00, 970459001–01	4	
26	596039201	LOCK NUT	For 970459001–00, 970459001–01	4	
26	539990585	NUT	For all EXCEPT 970459001–00, 970459001–01	4	

REF.	PART NO.	DESCRIPTION	REMARK	QTY.	KIT
27	596583702	NUT	For 970459001–00, 970459001–01	4	
27	873800500	LOCK NUT	For 967680901–00, 967681001–00, 967844901–00, 967681002–00	4	
28	586309101	WASHER	For 967680901–00, 967681001–00, 967844901–00, 967681002–00	4	
28	819111116	WASHER	For 967954002–00, 96784490101, 96795400100, 96795400300, 967954001–01, 96784490102	4	
28	596204101	WASHER	For 970459001–00, 970459001–01	4	
29	587614201	WASHER	For all EXCEPT 96784490101, 96795400100, 967954001–01, 96784490102	2	
30	525392902	GRIP	For 967680901–00, 967681001–00, 967844901–00, 967681002–00	2	
31	585985901	BOLT	For 967680901–00, 967681001–00, 967844901–00, 967681002–00	2	
31	587885301	SCREW	For 967954002–00, 96795400300	2	
32	873800500	LOCK NUT	For 967680901–00, 967681001–00, 967844901–00, 967681002–00	8	
32	539112899	NUT, 5/16–18, NYLOC	For 967680901–00, 967681001–00, 967844901–00, 967681002–00	10	
32	594944401	NUT	For 970459001–00, 970459001–01	10	
33	539112899	NUT, 5/16–18, NYLOC	For 967680901–00, 967681001–00, 967844901–00, 967681002–00	1	
	598851704	TUBE	Fits 967954001–01, 970459001–01	1	

For 967680901-00, 967681001-00, 967681002-00, 967954002-00, 96795400300, 970459001-00, 970459001-01

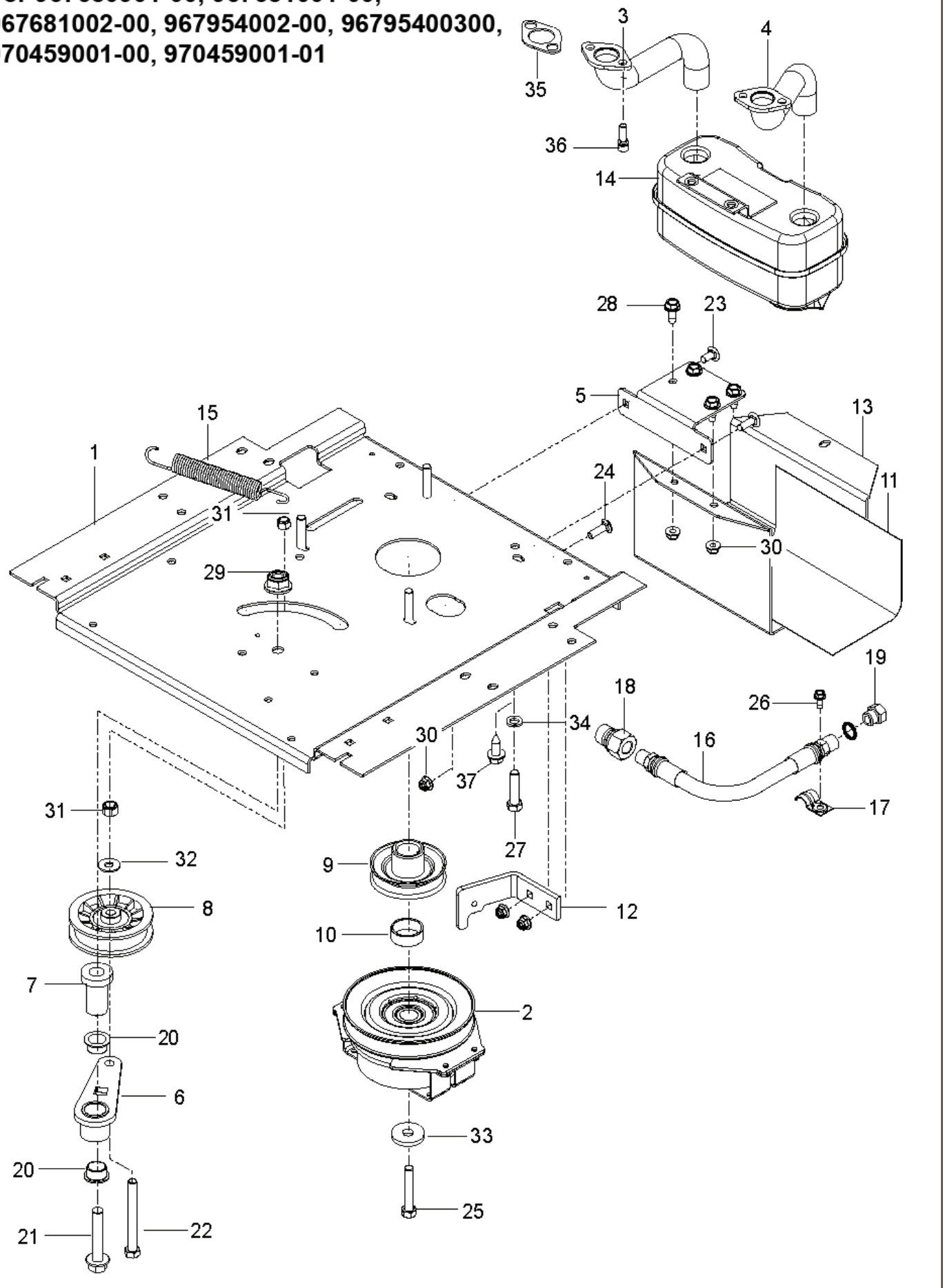

REF.	PART NO.	DESCRIPTION	REMARK	QTY.	KIT
1	588017102	PLATE	For 967680901–00, 967681001–00, 967681002–00, 970459001–00, 970459001–01	1	
1	593898602	PLATE	For 967954002–00, 96795400300	1	
2	587241601	CLUTCH		1	
3	581881101	TUBE	For 967680901–00	1	
3	583955701	TUBE	For 967681001–00, 967681002–00, 967954002–00, 96795400300, 970459001–00, 970459001–01	1	
4	581881001	TUBE	For 967680901–00	1	
4	583955601	TUBE	For 967681001–00, 967681002–00, 967954002–00, 96795400300, 970459001–00, 970459001–01	1	
5	581886702	BRACKET		1	
6	532448145	ARM		1	
7	582538901	SPINDLE		1	
8	539110311	PULLEY		1	
9	587537401	PULLEY		1	
10	587660101	SPACER		1	
11	539132859	HEAT SHIELD		1	
12	587633302	STOP		1	
13	587451202	GUARD		1	
14	539131604	MUFFLER ASSY		1	
15	532196105	SPRING		1	
16	584825501	HOSE ASSY	For 967681001–00, 967681002–00, 967954002–00, 96795400300, 970459001–00, 970459001–01	1	
17	539101363	CLAMP	For 967681001–00, 967681002–00, 967954002–00, 96795400300, 970459001–00, 970459001–01	1	
18	522599001	ADAPTER	For 967681001–00, 967681002–00, 967954002–00, 96795400300, 970459001–00, 970459001–01	1	
19	585807101	PLUG	For 967681001–00, 967681002–00, 967954002–00, 96795400300, 970459001–00, 970459001–01	1	
20	501603701	BEARING		2	
21	582539501	BOLT		1	
22	874520656	BOLT		1	
23	539990316	BOLT		2	
24	872140508	BOLT	For 967680901–00, 967681001–00, 967681002–00, 970459001–00, 970459001–01	2	
24	539990208	SCREW	For 967954002–00, 96795400300	2	
25	581332803	BOLT		1	
26	817490410	SCREW	For 967681001–00, 967681002–00, 967954002–00, 96795400300, 970459001–00, 970459001–01	1	
27	874760620	BOLT	For 967954002–00, 96795400300	4	
27	539976949	BOLT	For 967681001–00, 967681002–00, 970459001–00, 970459001–01	4	
28	817490512	SCREW		4	
29	539112899	NUT, 5/16–18, NYLOC	For 967680901–00	1	
29	521991101	NUT	For 967680901–00	1	

REF.	PART NO.	DESCRIPTION	REMARK	QTY.	KIT
30	539976979	NUT	For 967680901–00	2	
30	539112899	NUT, 5/16–18, NYLOC	For 967680901–00	5	
31	521991101	NUT	For 967680901–00	1	
31	539976979	NUT	For 967680901–00	2	
32	819121414	WASHER		2	
33	532126197	WASHER		1	
34	539990118	WASHER		4	
35	532165391	GASKET	For 967680901–00	2	
36	532183906	SCREW	For 967680901–00	4	
37	539976979	NUT	For 967680901–00	2	
	000000000	W/O DESCRIPTION	For 967680901–00. Engine, Briggs & Stratton 44T877 24 HP. For engine replacement parts, see a B&S dealer.	1	
	532178151	MUFFLER GASKET	For 967954002–00, 96795400300. KAWASAKI ENG ONLY.	1	
	532184362	NUT	For 967954002–00, 96795400300. NOT SHOWN.	2	
	539108120	NUT	For 967954002–00, 96795400300. NOT SHOWN.	1	

For 967844901-00, 96784490101, 96795400100, 967954001-01, 96784490102

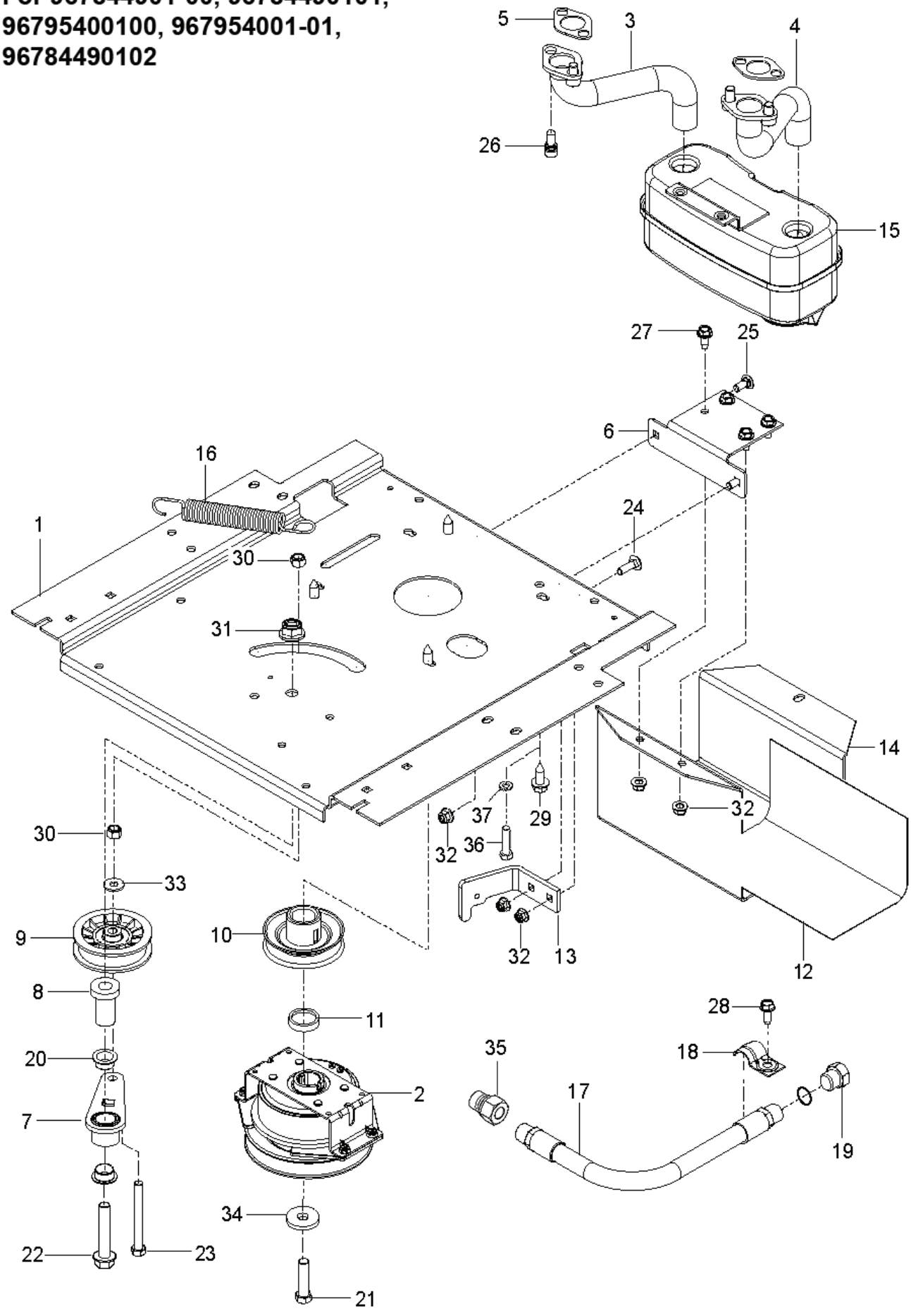

REF.	PART NO.	DESCRIPTION	REMARK	QTY.	KIT
1	588017102	PLATE	For 967844901–00	1	
1	593898602	PLATE	For 96784490101, 96795400100, 967954001–01, 96784490102	1	
2	587241601	CLUTCH		1	
3	583954801	TUBE	For 967844901–00, 96784490101, 96784490102	1	
3	583955701	TUBE	For 96795400100, 967954001–01	1	
4	583954501	TUBE	For 967844901–00, 96784490101, 96784490102	1	
4	583955601	TUBE	For 96795400100, 967954001–01	1	
5	532186054	GASKET MUFFLER	For 967844901–00, 96784490101, 96784490102	1	
6	581886702	BRACKET		1	
7	532448145	ARM		1	
8	582538901	SPINDLE		1	
9	539110311	PULLEY		1	
10	587537401	PULLEY		1	
11	587660101	SPACER		1	
12	539132859	HEAT SHIELD		1	
13	587633302	STOP		1	
14	587451202	GUARD		1	
15	539131604	MUFFLER ASSY		1	
16	532196105	SPRING		1	
17	584825501	HOSE ASSY		1	
18	539101363	CLAMP		1	
19	585807101	PLUG	For 967844901–00, 96795400100, 967954001–01	2	
19	501603701	BEARING	For 96784490101, 96784490102	2	
20	501603701	BEARING	For 96784490101, 96784490102	1	
21	581332803	BOLT		1	
22	582539501	BOLT		1	
23	874520656	BOLT		2	
24	539990208	SCREW		2	
25	539990316	BOLT		4	
26	596134201	SCREW	For 967844901–00	1	
26	532183906	SCREW	For 96784490101, 96784490102	1	
27	817490512	SCREW		4	
28	817490410	SCREW		4	
29	817120616	SCREW	For 967844901–00, 96784490101, 96784490102	2	
30	539976979	NUT		1	
31	521991101	NUT		5	
32	539112899	NUT, 5/16–18, NYLOC		1	
33	819121414	WASHER		1	
34	532126197	WASHER		1	
35	522599001	ADAPTER	For 96795400100, 967954001–01	1	
36	874780620	BOLT	For 96795400100, 967954001–01	4	
37	539990118	WASHER	For 96795400100, 967954001–01	4	
	589543901	INSTRUCTION	For 96784490101, 96784490102	1	
	000000000	W/O DESCRIPTION	For 967844901–00, 96784490101, 96784490102. Engine, Kohler KT745 26 HP. For engine replacement parts, see a Kohler dealer.	1	
	532178151	MUFFLER GASKET	For 96795400100, 967954001–01. NOT SHOWN.	2	
	532184362	NUT	For 96795400100, 967954001–01	1	
	539108120	NUT	For 96795400100, 967954001–01	1	

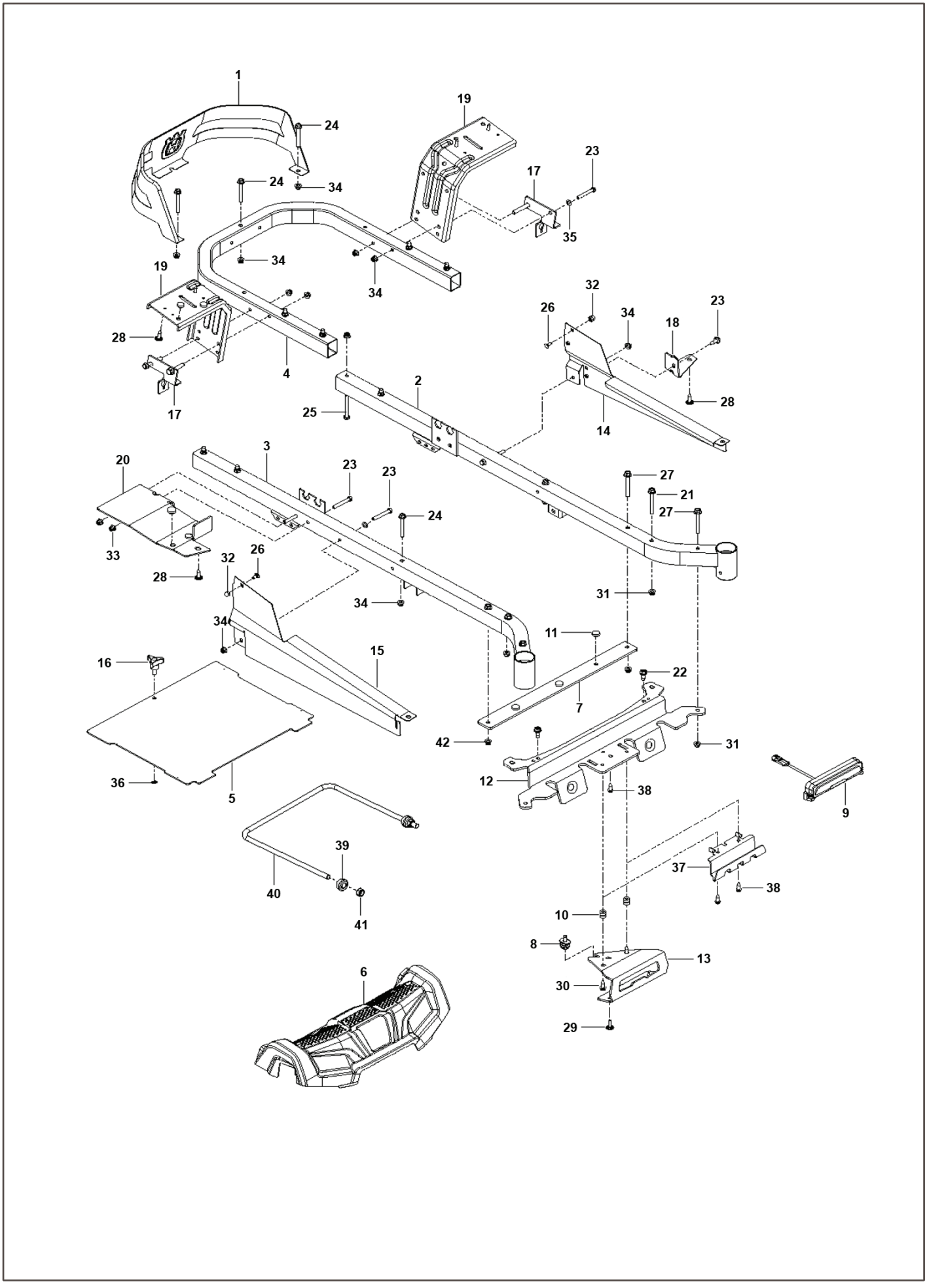
1
19
24
24
34
17
23
35
34
34
19
28
4
17
32
26
34
18
23
28
14
2
25
3
20
23
23
24
27
21
27
33
28
32
26
34
31
34
11
16
15
22
7
42
31
12
38
36
5
9
39
37
38
40
41
10
8
13
30
6
29

REF.	PART NO.	DESCRIPTION	REMARK	QTY.	KIT
1	585039803	GUARD	For	1	
1	585039802	GUARD		1	
2	589283402	FRAME TUBE		1	
3	589283302	FRAME TUBE		1	
4	584991002	TUBE		1	
5	522842902	PLATE	For 967680901–00, 967681001–00, 967844901–00, 967681002–00, 96784490101, 96795400300, 970459001–00, 970459001–01	1	
5	598523902	PLATE	For 967954001–01, 970459001–01	1	
5	581448602	PLATE	For 967954002–00, 96795400100, 967954001–01	1	
5	598712401	PLATE KIT	For 967680901–00, 96784490102	1	
5	598712402	PLATE KIT	For	1	
6	586703801	FRONT COVER		1	
6	586703802	FRONT COVER	For	1	
7	529365102	SUPPORT	For 967954001–01, 970459001–01	1	
7	585523004	SUPPORT		1	
8	587546901	SCREW	For all EXCEPT 967680901–00, 967954002–00, 96795400100, 967954001–01	1	
9	585916701	LIGHT	For all EXCEPT 967680901–00, 967954002–00, 96795400100, 967954001–01	1	
10	587225201	GROMMET	For all EXCEPT 967680901–00, 967954002–00, 96795400100, 967954001–01	2	
11	585989301	BUMPER		7	
12	585523104	CROSS MEMBER		1	
13	587458602	BRACKET	For all EXCEPT 967680901–00, 967954002–00, 96795400100, 967954001–01	1	
14	585331602	COVER		1	
15	585331502	COVER		1	
16	539104411	KNOB		1	
17	585474302	BRACKET		2	
17	593118304	SUPPORT	For 967954001–01, 970459001–01	1	
18	593682604	SUPPORT	For 967954001–01, 970459001–01	1	
18	585523604	SUPPORT		1	
19	580501302	BRACKET		2	
20	585523404	SUPPORT		1	
21	586654301	BOLT		2	
22	586881101	BOLT		2	
23	874780536	BOLT		7	
24	874490544	SCREW	For 967680901–00	5	
24	874780544	BOLT	For all EXCEPT 967680901–00	5	
25	874780648	BOLT		8	
26	585940001	BOLT		2	
27	577117701	SCREW		4	
28	532416358	SCREW		6	
29	532421756	SCREW	For 96795400100, 967954001–01	2	
30	817580520	BOLT	For all EXCEPT 967680901–00, 967954002–00, 96795400100, 967954001–01	2	
31	521996501	NUT		6	
32	585938101	NUT		2	
33	873900500	NUT		2	
34	539112899	NUT, 5/16–18, NYLOC		9	
35	819111116	WASHER		6	
36	532423063	WASHER		1	

REF.	PART NO.	DESCRIPTION	REMARK	QTY.	KIT
37	585523204	SKID PLATE	For 967680901−00, 967954002−00, 96795400100, 967954001−01	1	
37	593118804	SKID PLATE	For 967954001−01, 970459001−01	1	
38	817000510	BOLT	For 967680901−00, 967954002−00, 96795400100, 967954001−01	1	
39	532195263	BUSHING	For 967680901−00, 967954002−00, 96784490101, 96795400100, 96795400300, 967954001−01, 96784490102	2	
40	521938101	LINK	For 967680901−00, 967954002−00, 96784490101, 96795400100, 96795400300, 967954001−01, 96784490102	1	
41	539119124	NUT	For 967680901−00, 967954002−00, 96784490101, 96795400100, 96795400300, 967954001−01, 96784490102	2	
42	532421756	SCREW	For 96795400100, 967954001−01	2	

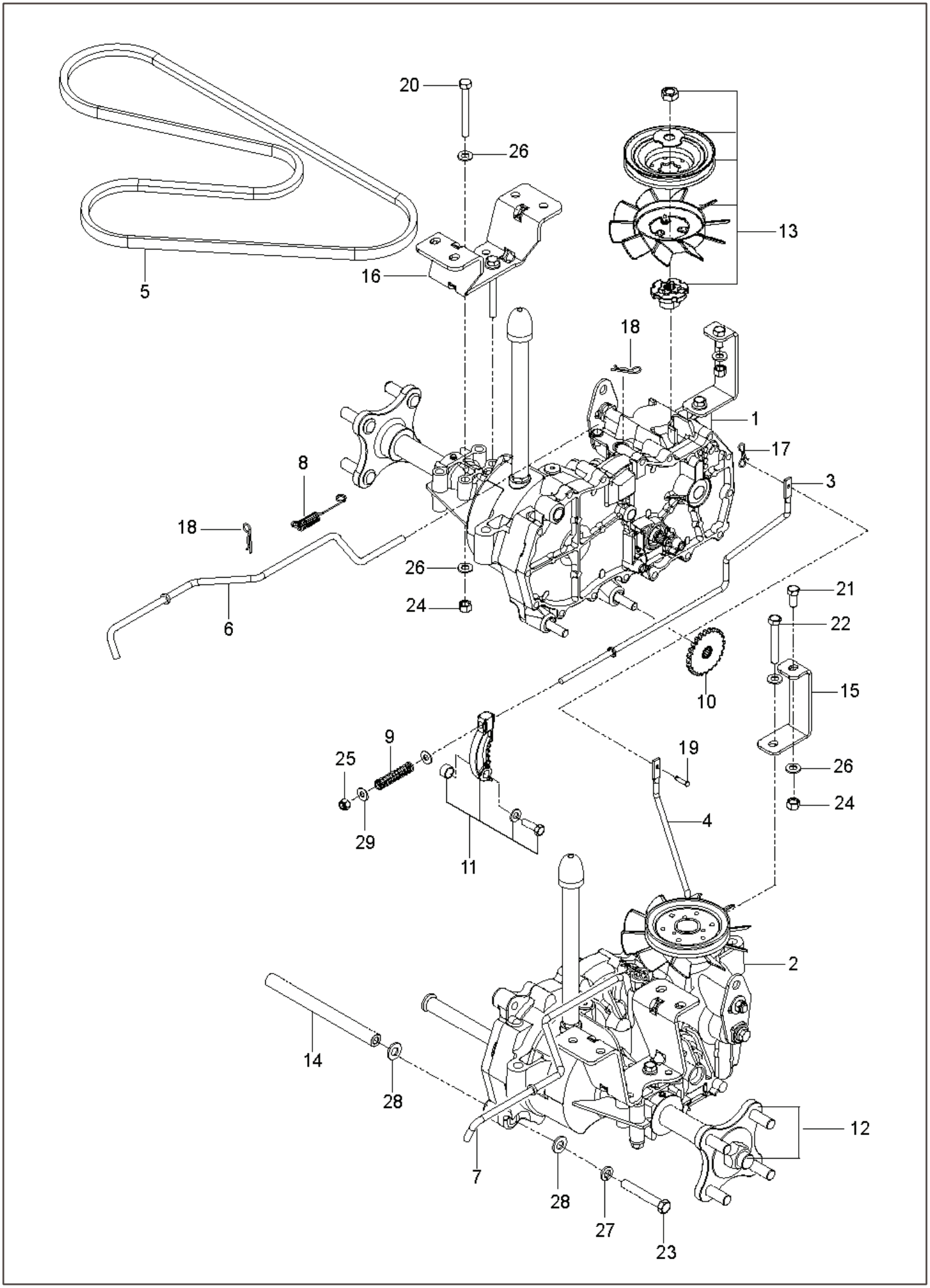
20
26
13
5
16
18
1
17
8
3
18
26
24
6
21
22
10
15
9
19
25
26
24
29
4
11
2
14
28
12
7
28
27
23

REF.	PART NO.	DESCRIPTION	REMARK	QTY.	KIT
1	510375601	TRANSMISSION		1	
2	510375602	TRANSMISSION		1	
3	574030501	LINKAGE		1	
4	574030502	LINKAGE		1	
5	539110411	BELT		1	
6	585474401	ROD		1	
7	585474501	ROD		1	
8	586665101	SPRING		2	
9	539110342	SPRING		2	
10	539120080	DISC		2	
11	539120079	ARM		2	
12	575507001	KIT		1	
13	501403602	TRANSMISSION KIT		2	
14	510184104	SPACING TUBE		2	
15	580806502	SUPPORT		2	
16	580806602	BRACKET		2	
17	587225301	PIN		1	
18	539976988	PIN		4	
19	587115301	PEN		1	
20	874780544	BOLT		4	
21	539976934	SCREW		2	
22	874780536	BOLT		2	
23	539990637	SCREW		4	
24	873800500	LOCK NUT		8	
25	539976978	NUT		2	
26	819111116	WASHER		16	
27	539990118	WASHER		4	
28	819131316	WASHER		8	
29	819091016	WASHER		4	