Product Catalog: Husqvarna/LE322R

DECK

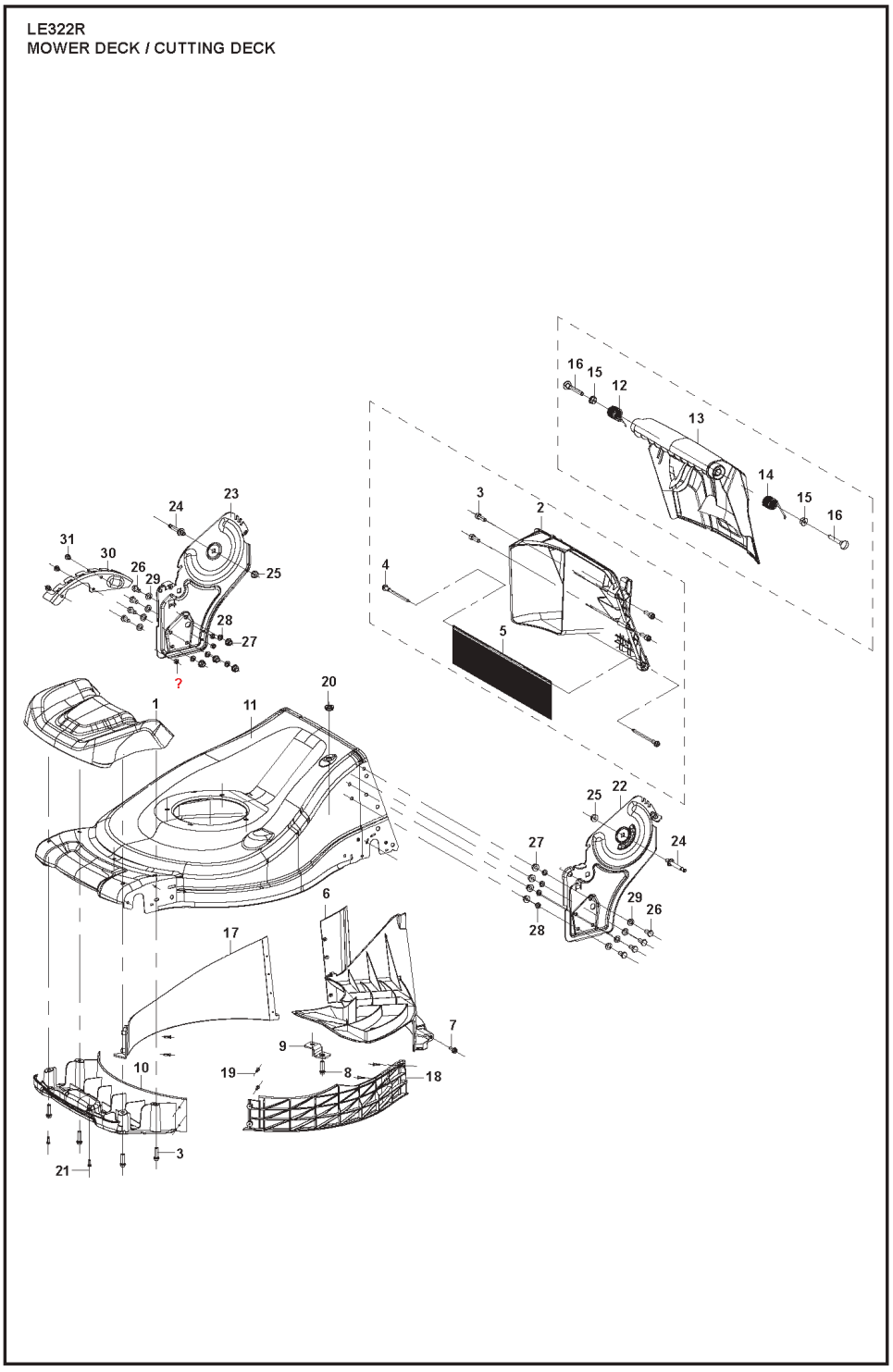

Ref.	Article N.	Description	Qty	Kit
1	537582146	COVER *Deck Front Cover*	1	-
2	537582147	BOARD *Rear Protection board*	1	-
3	538970601	DRIVE SCREW *Bolt, Deck Front Cover*	8	-
4	587438201	SCREW *Grass Plate Fixing Bolt*	2	-
5	586698801	GUARD *Grass Pressing Plate*	1	-
6	537582148	COVER *Motor protection cover*	1	-
7	538970801	DRIVE SCREW *Bolt*	2	-
8	581726101	BOLT *Bolt*	1	-
9	537582149	COVER *Mounting bracket of self-propelled device protective cover*	1	-
10	537582150	COVER *Grass comb cover*	1	-
11	537582151	DECK *Deck*	1	-
12	538681301	SPRING *Rear Flap Torsion spring (Right)*	1	-
13	538970901	FLAP *Rear Flap*	1	-
14	538681401	SPRING *Rear Flap Torsion spring (Left)*	1	-
15	532413284	NUT *Torsion Spring Pin Nut*	2	-
16	587198901	BOLT *Torsion Spring Pin*	2	-
17	537582153	LINING *Deck liner 1*	1	-
18	537582154	LINING *Deck liner 2*	1	-
19	537582155	BOLT *Cross countersunk head tapping bolt st4x14*	10	-
20	537582156	HARNESS *Self propelled device harness sheath*	1	-
21	537582108	SCREW *Torx slotted pan head tapping screw*	33	-
1	537582158	FRONT AXLE ASSY	1	-

Ref.	Article N.	Description	Qty	Kit
		Front Wheel Axle Ass'y		
2	537582159	BOLT *Hexagon flange bolt M6x8*	4	-
3	532197480	O-RING *O shape ring*	2	-
4	532067725	WASHER *Washer*	2	-
5	537582160	WHEEL *Wheel Ass'y 8"*	2	-
6	532409148	NUT *Nut*	4	-
7	546598001	REAR AXLE *Liffting mechanism welding assembly*	1	-
8	538681101	CIRCLIP *Clip*	4	-
9	537582163	TRANSMISSION *Self-propelled device*	1	-
10	537582164	PLATE *Self-propelled device fixing plate*	1	-
11	537582165	SCREW *Cross recessed pan head screw*	1	-
12	538681201	DRIVE SCREW *M5 Nut*	3	-
13	537582167	BOLT *Cross tapping bolt ST4 8x12*	2	-
14	537582168	BEARING *Low speed bearing*	6	-
15	537582169	WHEEL *Wheel axle sleeve (11" wheel)*	2	-
16	501067001	WHEEL ASSY *Wheel Assy 11"*	2	-
17	537582170	GEAR *Driven gear*	2	-
18	537582171	BOLT *Wheel gear bolt*	6	-
19	587251701	DUST COVER *Wheel cap 11"*	2	-
20	532404845	PAWL *Gear Pin*	2	-
21	587232401	PINION *Driving Gear 11*	2	-
22	581127601	SCREW *Lifting mechanism fixing bolt*	4	-

Ref.	Article N.	Description	Qty	Kit
23	537582172	PLATE *Lifting mechanism fixing plate*	2	-
24	537582173	SLEEVE *Lifting mechanism shaft sleeve*	2	-
25	537582174	SPRING *Height adjusting tension spring*	1	-
26	537582175	SPRING *Height adjusting torsion spring*	1	-
27	537582176	COVER *Height adjusting handle (Left cover)*	1	-
28	537582177	COVER *Height adjusting handle (Right cover)*	1	-
29	537582178	PIN *Cotter pin*	1	-
30	537582179	SCREW *Cross recessed pan head tapping screw ST4 * 10*	2	-
31	537582180	ROD *Connecting rod*	1	-
32	537582181	NUT *M6 lock nut(blacking)*	2	-
33	537582182	CIRCLIP *Lifting mechanism open circlip*	2	-
34	537582183	ROD *Feight adjusting rod*	1	-
1	537582184	BAR *LT ALU EXTRUSION HANDLE BAR*	1	-
2	537582185	BAR *RT ALU EXTRUSION HANDLE BAR*	1	-
3	537582186	CABLE *FOLDING MECHANISM CABLE*	2	-
4	537582187	PLATE *FOLDING STOP PLATE (RIGHT)*	1	-
5	537582188	PLATE *FOLDING STOP PLATE (LEFT)*	1	-
6	537582189	PAWL *LIMIT PAWL (RIGHT)*	1	-
7	537582190	PAWL *LIMIT PAWL (LEFT)*	2	-
8	537582191	BOLT *FOLDING STOP PLATE BOLT*	1	-
9	537582192	SPRING *LIMIT PAWL TORSION SPRING RT*	1	-
10	537582193	SPRING	1	-

Ref.	Article N.	Description	Qty	Kit
		LIMIT PAWL TORSION SPRING LT		
11	537582194	BRACKET *EXTRUSION SUPPORT BRACKET LT*	1	-
12	537582195	BRACKET *EXTRUSION SUPPORT BRACKET RT*	2	-
13	537582196	SLEEVE *PUSH ROD LIMIT SLEEVE*	2	-
14	538971101	DRIVE SCREW *DRIVE SCREW LOWER EXTRUSION BO*	4	-
15	587599901	NUT *NUT.FLANGE.SERRAT.3125-18.5625*	8	-
16	537582197	FLANGE *HEXAGON FLANGE BOLT M8X16*	8	-
17	537582198	NUT *HEXAGON FLANGE NUT (M8)*	8	-
18	537582199	WASHER *ELASTIC WASHER 8*	8	-
19	537582201	WASHER *FLAT WASHER 8 GB T97.1*	1	-
20	537582202	PLATE *GEAR PLATE*	2	-
21	537582203	PLUG *EXTRUSION PLUG*	4	-
22	537582204	BOLT *HEXAGON HEAD BOLT M5X70*	2	-
23	537582205	BOLT *HEXAGON HEAD BOLT M5*	1	-
24	538971201	WIRING ASSY *PARALLEL WIRE HARNESS ASSY*	1	-
25	537582207	HARNESS *WIRE HARNESS ASSEMBLY*	1	-
26	537582210	LEVER *BRAKE LEVER*	1	-
27	537582211	BUTTON *SPEED ADJUSTMENT BUTTON*	1	-
28	537582212	MAGNET *HALL MAGNET*	1	-
29	537582213	STEEL *3 STEEL BALL*	1	-
30	538971301	GUSSET *GUSSET WEAR GASKET*	4	-
31	537582215	SPRING *STEEL BALL RETURN SPRING*	1	-

Ref.	Article N.	Description	Qty	Kit
32	537582216	BOX *UPPER COVER OF SWITCH BOX*	1	-
33	537582217	BOX *LOWER COVER OF SWITCH BOX*	1	-
34	537582218	PLATE *SWITCH BOX BUTTON GUIDE PLATE*	1	-
35	537582219	BOX *SWITCH BOX PCB*	1	-
36	537582220	BUTTON *TRIGGER BUTTON (BUTTON 1)*	1	-
37	537582221	BUTTON *POWER ON BUTTON (BUTTON 2)*	1	-
38	537582222	BUTTON *FUNCTION BUTTON (BUTTON 3)*	1	-
39	537582223	SWITCH *SELFPROPELL SWITCH MICROSWITCH*	2	-
40	537582224	COVER *HANDLE UPPER COVER*	1	-
41	537582225	COVER *HANDLE LOWER COVER*	1	-
42	537582226	BUTTON *ACCELERATION BUTTON (LEFT)*	1	-
43	537582227	BUTTON *ACCELERATION BUTTON (RIGHT)*	1	-
44	537582228	KNOB *BRAKE LEVER SHUT OFF KNOB*	2	-
45	537582229	SPRING *BRAKE LEVER RETURN SPRING LT*	1	-
46	537582230	SPRING *BRAKE LEVER RETURN SPRING RT*	1	-
47	537582231	SWITCH *BRAKE LEVER SWITCH*	1	-
48	537582232	PLATE *CRIMPING PLATE*	1	-
49	537582233	BUTTON *FOLDING BUTTON*	1	-
50	537582234	ROD *FOLDING BUTTON PUSH ROD*	1	-
51	537582235	STOPPER *CABLE STOPPER*	2	-
52	538971401	DRIVE SCREW *DRIVE SCREW M4X12*	4	-
53	538680801	DRIVE SCREW	1	-

Ref.	Article N.	Description	Qty	Kit
		SCREW SELF TAPPING		
54	537582238	ROD *CABLE CARRYING ROD 2*	1	-
55	537582239	ROD *CABLE CARRYING ROD 1*	1	-
56	537582240	PLATE *HNDL WIRE HARNESS PRESS PLATE1*	1	-
57	537582241	PLATE *HNDL WIRE HARNESS PRESS PLATE2*	3	-
58	537582242	ROD *STAY ROD*	1	-
59	538971501	DRIVE SCREW *DRIVE SCREW BOLT M4X16*	2	-
60	538971601	DRIVE SCREW *DRIVE SCREW ST3X10*	2	-
61	538970501	DRIVE SCREW *DRIVE SCREW TORX SCREW*	3	-
62	537582247	SCREW *SCREW PANHEAD ST4X10 W/WASHER*	2	-
63	538971901	WIRE *WIRE PLUG*	2	-
64	538971801	DRIVE SCREW *DRIVE SCREW BOLT ST3X8*	1	-
65	537582249	COVER *FOLDING SWITCH UPPER COVER*	1	-
66	537582250	COVER *FOLDING SWITCH LOWER COVER*	1	-
67	537582251	SWITCH *FOLDING SWITCH SLIDER*	1	-
68	537582252	SPRING *SPRING SWITCH SLIDER 5X0.7X13*	1	-
69	537582253	SWITCH *FOLDED SWITCH*	1	-
70	537582254	SCREW *SCREW PANHEAD M5X10*	3	-
71	538971901	WIRE *WIRE PLUG*	1	-
1	537582101	COVER *Upper Cover*	1	-
2	537582102	FLAP *Flap*	1	-
3	537582103	COVER *Left side cover*	1	-

Ref.	Article N.	Description	Qty	Kit
4	537582104	COVER *Right side cover*	1	-
5	537582105	SPRING *Left torsion spring*	1	-
6	537582106	SPRING *Right torsion spring*	1	-
7	537582107	FILTER *Filter sponge*	1	-
8	537582108	SCREW *Torx slotted pan head tapping screw*	36	-
9	537582109	SCREW *Hexagon socket Torx pan head tapping half thread screw*	2	-
10	537582110	CONTROL *USE BEFORE SERIAL # 20231500001 **REF #10 & REF #11 MUST BE ORDERED TOGETHER*	1	-
10	548309601	SERVICE KIT *USE AFTER SERIAL # 20231500001 **REF #10 & REF #11 MUST BE ORDERED TOGETHER*	1	-
11	537582111	CONTROL *USE BEFORE SERIAL # 20231500001 **REF #10 & REF #11 MUST BE ORDERED TOGETHER*	1	-
11	548309701	SERVICE KIT *USE AFTER SERIAL # 20231500001 **REF #10 & REF #11 MUST BE ORDERED TOGETHER*	1	-
12	537582112	CONTROL *Self propelled controller*	1	-
13	537582113	BLOCK *Terminal block*	2	-
14	537582114	CASE *Red terminal plastic case*	2	-
15	537582115	CASE *White terminal plastic case*	2	-
16	537582116	CASE *Blue plastic case*	2	-
17	537582117	CASE *Black terminal plastic case*	2	-
18	537582118	TERMINAL *Terminal*	6	-
19	537582119	PIN *Rolled elastic pin 2.5x11*	4	-
20	538969801	CONDUCTOR *Black Conductor*	2	-

Ref.	Article N.	Description	Qty	Kit
21	537582120	CONDUCTOR *Sampling signal conductor*	1	-
22	537582121	BASE *Base*	1	-
23	537582122	CAP *Pop up cap*	4	-
24	537582123	CASE *Battery compartment*	1	-
25	537582124	SHIELD *Wind shield*	1	-
26	537582125	COVER *Left lamp cover*	1	-
27	537582126	COVER *Right lamp cover*	1	-
28	537582127	HOLDER *Left lamp holder*	1	-
29	537582128	HOLDER *Right lamp holder*	1	-
30	537582129	PANEL *Left light panel ass'y*	1	-
31	537582130	PANEL *Right light panel ass'y*	1	-
32	537582131	SPRING *Ejector spring*	4	-
33	537582133	SCREW *Hexagon socket pattern pan head tapping screw*	6	-
34	537582134	MOTOR *Motor sit*	1	-
35	537582135	MOTOR *Brushless motor*	1	-
36	537582136	SCREW *Torx slotted pan head screw*	4	-
37	537582137	NUT *Hexagon thick nut*	4	-
38	537582138	CONDUCTOR *Self propelled /conductor*	1	-
39	537582139	PLATE *Crimping plate*	1	-
40	537582140	FAN *Fan*	1	-
41	537582141	BLADE *Blade*	1	-
42	538970201	DRIVE SCREW	1	-

Ref.	Article N.	Description	Qty	Kit
		Hexagon bolt (grade 10.9)		
43	538970301	SPRING *Spring washer*	1	-
44	538970401	RETAINER RING *Blade washer*	1	-
45	537582144	BOLT *Hexagon head bolt M10x20*	3	-
46	537582145	NUT *Hexagon lock nut*	3	-
47	538969901	CIRCUIT BREAKER *Magnetic ring assembly*	2	-
1	538971001	BAG FRAME *Grass catcher bag*	1	-
2	586922701	MULCHING PLUG *Mulching plug*	1	-
3	538680501	CHUTE *Side Discharge Chute*	1	-
4	586929102	BAG FRAME *Grass catcher bag bracket*	1	-

DRIVE

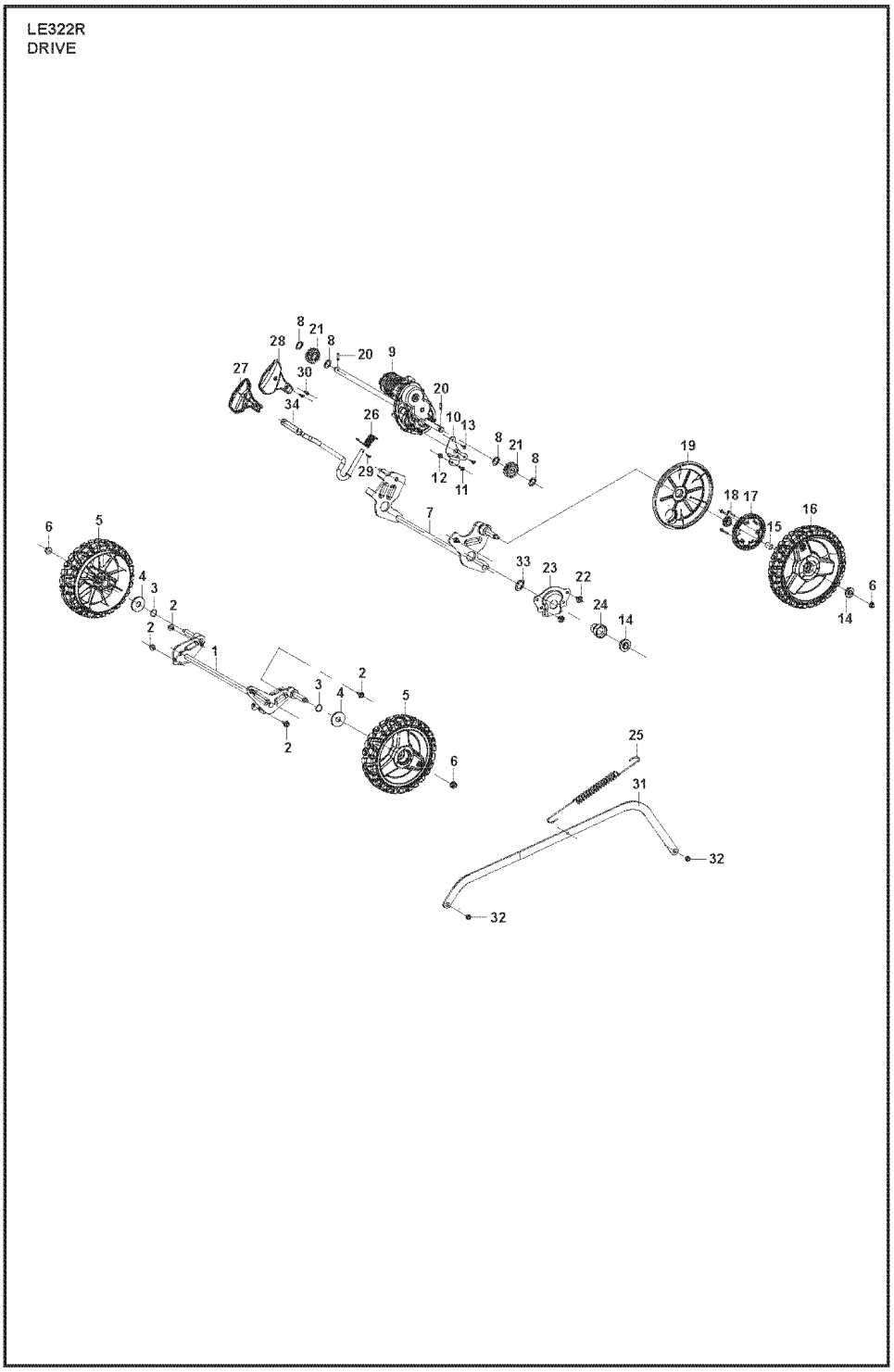

Ref.	Article N.	Description	Qty	Kit
1	537582146	COVER *Deck Front Cover*	1	-
2	537582147	BOARD *Rear Protection board*	1	-
3	538970601	DRIVE SCREW *Bolt, Deck Front Cover*	8	-

Ref.	Article N.	Description	Qty	Kit
4	587438201	SCREW *Grass Plate Fixing Bolt*	2	-
5	586698801	GUARD *Grass Pressing Plate*	1	-
6	537582148	COVER *Motor protection cover*	1	-
7	538970801	DRIVE SCREW *Bolt*	2	-
8	581726101	BOLT *Bolt*	1	-
9	537582149	COVER *Mounting bracket of self-propelled device protective cover*	1	-
10	537582150	COVER *Grass comb cover*	1	-
11	537582151	DECK *Deck*	1	-
12	538681301	SPRING *Rear Flap Torsion spring (Right)*	1	-
13	538970901	FLAP *Rear Flap*	1	-
14	538681401	SPRING *Rear Flap Torsion spring (Left)*	1	-
15	532413284	NUT *Torsion Spring Pin Nut*	2	-
16	587198901	BOLT *Torsion Spring Pin*	2	-
17	537582153	LINING *Deck liner 1*	1	-
18	537582154	LINING *Deck liner 2*	1	-
19	537582155	BOLT *Cross countersunk head tapping bolt st4x14*	10	-
20	537582156	HARNESS *Self propelled device harness sheath*	1	-
21	537582108	SCREW *Torx slotted pan head tapping screw*	33	-
1	537582158	FRONT AXLE ASSY *Front Wheel Axle Ass'y*	1	-
2	537582159	BOLT *Hexagon flange bolt M6x8*	4	-
3	532197480	O-RING *O shape ring*	2	-
4	532067725	WASHER	2	-

Ref.	Article N.	Description	Qty	Kit
		Washer		
5	537582160	WHEEL *Wheel Ass'y 8"*	2	-
6	532409148	NUT *Nut*	4	-
7	546598001	REAR AXLE *Liffting mechanism welding assembly*	1	-
8	538681101	CIRCLIP *Clip*	4	-
9	537582163	TRANSMISSION *Self-propelled device*	1	-
10	537582164	PLATE *Self-propelled device fixing plate*	1	-
11	537582165	SCREW *Cross recessed pan head screw*	1	-
12	538681201	DRIVE SCREW *M5 Nut*	3	-
13	537582167	BOLT *Cross tapping bolt ST4 8x12*	2	-
14	537582168	BEARING *Low speed bearing*	6	-
15	537582169	WHEEL *Wheel axle sleeve (11" wheel)*	2	-
16	501067001	WHEEL ASSY *Wheel Assy 11"*	2	-
17	537582170	GEAR *Driven gear*	2	-
18	537582171	BOLT *Wheel gear bolt*	6	-
19	587251701	DUST COVER *Wheel cap 11"*	2	-
20	532404845	PAWL *Gear Pin*	2	-
21	587232401	PINION *Driving Gear 11*	2	-
22	581127601	SCREW *Lifting mechanism fixing bolt*	4	-
23	537582172	PLATE *Lifting mechanism fixing plate*	2	-
24	537582173	SLEEVE *Lifting mechanism shaft sleeve*	2	-
25	537582174	SPRING *Height adjusting tension spring*	1	-

Ref.	Article N.	Description	Qty	Kit
26	537582175	SPRING *Height adjusting torsion spring*	1	-
27	537582176	COVER *Height adjusting handle (Left cover)*	1	-
28	537582177	COVER *Height adjusting handle (Right cover)*	1	-
29	537582178	PIN *Cotter pin*	1	-
30	537582179	SCREW *Cross recessed pan head tapping screw ST4 * 10*	2	-
31	537582180	ROD *Connecting rod*	1	-
32	537582181	NUT *M6 lock nut(blacking)*	2	-
33	537582182	CIRCLIP *Lifting mechanism open circlip*	2	-
34	537582183	ROD *Feight adjusting rod*	1	-
1	537582184	BAR *LT ALU EXTRUSION HANDLE BAR*	1	-
2	537582185	BAR *RT ALU EXTRUSION HANDLE BAR*	1	-
3	537582186	CABLE *FOLDING MECHANISM CABLE*	2	-
4	537582187	PLATE *FOLDING STOP PLATE (RIGHT)*	1	-
5	537582188	PLATE *FOLDING STOP PLATE (LEFT)*	1	-
6	537582189	PAWL *LIMIT PAWL (RIGHT)*	1	-
7	537582190	PAWL *LIMIT PAWL (LEFT)*	2	-
8	537582191	BOLT *FOLDING STOP PLATE BOLT*	1	-
9	537582192	SPRING *LIMIT PAWL TORSION SPRING RT*	1	-
10	537582193	SPRING *LIMIT PAWL TORSION SPRING LT*	1	-
11	537582194	BRACKET *EXTRUSION SUPPORT BRACKET LT*	1	-
12	537582195	BRACKET *EXTRUSION SUPPORT BRACKET RT*	2	-
13	537582196	SLEEVE	2	-

Ref.	Article N.	Description	Qty	Kit
		PUSH ROD LIMIT SLEEVE		
14	538971101	DRIVE SCREW *DRIVE SCREW LOWER EXTRUSION BO*	4	-
15	587599901	NUT *NUT.FLANGE.SERRAT.3125-18.5625*	8	-
16	537582197	FLANGE *HEXAGON FLANGE BOLT M8X16*	8	-
17	537582198	NUT *HEXAGON FLANGE NUT (M8)*	8	-
18	537582199	WASHER *ELASTIC WASHER 8*	8	-
19	537582201	WASHER *FLAT WASHER 8 GB T97.1*	1	-
20	537582202	PLATE *GEAR PLATE*	2	-
21	537582203	PLUG *EXTRUSION PLUG*	4	-
22	537582204	BOLT *HEXAGON HEAD BOLT M5X70*	2	-
23	537582205	BOLT *HEXAGON HEAD BOLT M5*	1	-
24	538971201	WIRING ASSY *PARALLEL WIRE HARNESS ASSY*	1	-
25	537582207	HARNESS *WIRE HARNESS ASSEMBLY*	1	-
26	537582210	LEVER *BRAKE LEVER*	1	-
27	537582211	BUTTON *SPEED ADJUSTMENT BUTTON*	1	-
28	537582212	MAGNET *HALL MAGNET*	1	-
29	537582213	STEEL *3 STEEL BALL*	1	-
30	538971301	GUSSET *GUSSET WEAR GASKET*	4	-
31	537582215	SPRING *STEEL BALL RETURN SPRING*	1	-
32	537582216	BOX *UPPER COVER OF SWITCH BOX*	1	-
33	537582217	BOX *LOWER COVER OF SWITCH BOX*	1	-
34	537582218	PLATE *SWITCH BOX BUTTON GUIDE PLATE*	1	-

Ref.	Article N.	Description	Qty	Kit
35	537582219	BOX *SWITCH BOX PCB*	1	-
36	537582220	BUTTON *TRIGGER BUTTON (BUTTON 1)*	1	-
37	537582221	BUTTON *POWER ON BUTTON (BUTTON 2)*	1	-
38	537582222	BUTTON *FUNCTION BUTTON (BUTTON 3)*	1	-
39	537582223	SWITCH *SELFPROPELL SWITCH MICROSWITCH*	2	-
40	537582224	COVER *HANDLE UPPER COVER*	1	-
41	537582225	COVER *HANDLE LOWER COVER*	1	-
42	537582226	BUTTON *ACCELERATION BUTTON (LEFT)*	1	-
43	537582227	BUTTON *ACCELERATION BUTTON (RIGHT)*	1	-
44	537582228	KNOB *BRAKE LEVER SHUT OFF KNOB*	2	-
45	537582229	SPRING *BRAKE LEVER RETURN SPRING LT*	1	-
46	537582230	SPRING *BRAKE LEVER RETURN SPRING RT*	1	-
47	537582231	SWITCH *BRAKE LEVER SWITCH*	1	-
48	537582232	PLATE *CRIMPING PLATE*	1	-
49	537582233	BUTTON *FOLDING BUTTON*	1	-
50	537582234	ROD *FOLDING BUTTON PUSH ROD*	1	-
51	537582235	STOPPER *CABLE STOPPER*	2	-
52	538971401	DRIVE SCREW *DRIVE SCREW M4X12*	4	-
53	538680801	DRIVE SCREW *SCREW SELF TAPPING*	1	-
54	537582238	ROD *CABLE CARRYING ROD 2*	1	-
55	537582239	ROD *CABLE CARRYING ROD 1*	1	-
56	537582240	PLATE	1	-

Ref.	Article N.	Description	Qty	Kit
		HNDL WIRE HARNESS PRESS PLATE1		
57	537582241	PLATE *HNDL WIRE HARNESS PRESS PLATE2*	3	-
58	537582242	ROD *STAY ROD*	1	-
59	538971501	DRIVE SCREW *DRIVE SCREW BOLT M4X16*	2	-
60	538971601	DRIVE SCREW *DRIVE SCREW ST3X10*	2	-
61	538970501	DRIVE SCREW *DRIVE SCREW TORX SCREW*	3	-
62	537582247	SCREW *SCREW PANHEAD ST4X10 W/WASHER*	2	-
63	538971901	WIRE *WIRE PLUG*	2	-
64	538971801	DRIVE SCREW *DRIVE SCREW BOLT ST3X8*	1	-
65	537582249	COVER *FOLDING SWITCH UPPER COVER*	1	-
66	537582250	COVER *FOLDING SWITCH LOWER COVER*	1	-
67	537582251	SWITCH *FOLDING SWITCH SLIDER*	1	-
68	537582252	SPRING *SPRING SWITCH SLIDER 5X0.7X13*	1	-
69	537582253	SWITCH *FOLDED SWITCH*	1	-
70	537582254	SCREW *SCREW PANHEAD M5X10*	3	-
71	538971901	WIRE *WIRE PLUG*	1	-
1	537582101	COVER *Upper Cover*	1	-
2	537582102	FLAP *Flap*	1	-
3	537582103	COVER *Left side cover*	1	-
4	537582104	COVER *Right side cover*	1	-
5	537582105	SPRING *Left torsion spring*	1	-
6	537582106	SPRING *Right torsion spring*	1	-

Ref.	Article N.	Description	Qty	Kit
7	537582107	FILTER *Filter sponge*	1	-
8	537582108	SCREW *Torx slotted pan head tapping screw*	36	-
9	537582109	SCREW *Hexagon socket Torx pan head tapping half thread screw*	2	-
10	537582110	CONTROL *USE BEFORE SERIAL # 20231500001 **REF #10 & REF #11 MUST BE ORDERED TOGETHER*	1	-
10	548309601	SERVICE KIT *USE AFTER SERIAL # 20231500001 **REF #10 & REF #11 MUST BE ORDERED TOGETHER*	1	-
11	537582111	CONTROL *USE BEFORE SERIAL # 20231500001 **REF #10 & REF #11 MUST BE ORDERED TOGETHER*	1	-
11	548309701	SERVICE KIT *USE AFTER SERIAL # 20231500001 **REF #10 & REF #11 MUST BE ORDERED TOGETHER*	1	-
12	537582112	CONTROL *Self propelled controller*	1	-
13	537582113	BLOCK *Terminal block*	2	-
14	537582114	CASE *Red terminal plastic case*	2	-
15	537582115	CASE *White terminal plastic case*	2	-
16	537582116	CASE *Blue plastic case*	2	-
17	537582117	CASE *Black terminal plastic case*	2	-
18	537582118	TERMINAL *Terminal*	6	-
19	537582119	PIN *Rolled elastic pin 2.5x11*	4	-
20	538969801	CONDUCTOR *Black Conductor*	2	-
21	537582120	CONDUCTOR *Sampling signal conductor*	1	-
22	537582121	BASE *Base*	1	-
23	537582122	CAP *Pop up cap*	4	-

Ref.	Article N.	Description	Qty	Kit
24	537582123	CASE *Battery compartment*	1	-
25	537582124	SHIELD *Wind shield*	1	-
26	537582125	COVER *Left lamp cover*	1	-
27	537582126	COVER *Right lamp cover*	1	-
28	537582127	HOLDER *Left lamp holder*	1	-
29	537582128	HOLDER *Right lamp holder*	1	-
30	537582129	PANEL *Left light panel ass'y*	1	-
31	537582130	PANEL *Right light panel ass'y*	1	-
32	537582131	SPRING *Ejector spring*	4	-
33	537582133	SCREW *Hexagon socket pattern pan head tapping screw*	6	-
34	537582134	MOTOR *Motor sit*	1	-
35	537582135	MOTOR *Brushless motor*	1	-
36	537582136	SCREW *Torx slotted pan head screw*	4	-
37	537582137	NUT *Hexagon thick nut*	4	-
38	537582138	CONDUCTOR *Self propelled /conductor*	1	-
39	537582139	PLATE *Crimping plate*	1	-
40	537582140	FAN *Fan*	1	-
41	537582141	BLADE *Blade*	1	-
42	538970201	DRIVE SCREW *Hexagon bolt (grade 10.9)*	1	-
43	538970301	SPRING *Spring washer*	1	-
44	538970401	RETAINER RING *Blade washer*	1	-
45	537582144	BOLT	3	-

Ref.	Article N.	Description	Qty	Kit
		Hexagon head bolt M10x20		
46	537582145	NUT *Hexagon lock nut*	3	-
47	538969901	CIRCUIT BREAKER *Magnetic ring assembly*	2	-
1	538971001	BAG FRAME *Grass catcher bag*	1	-
2	586922701	MULCHING PLUG *Mulching plug*	1	-
3	538680501	CHUTE *Side Discharge Chute*	1	-
4	586929102	BAG FRAME *Grass catcher bag bracket*	1	-

HANDLE

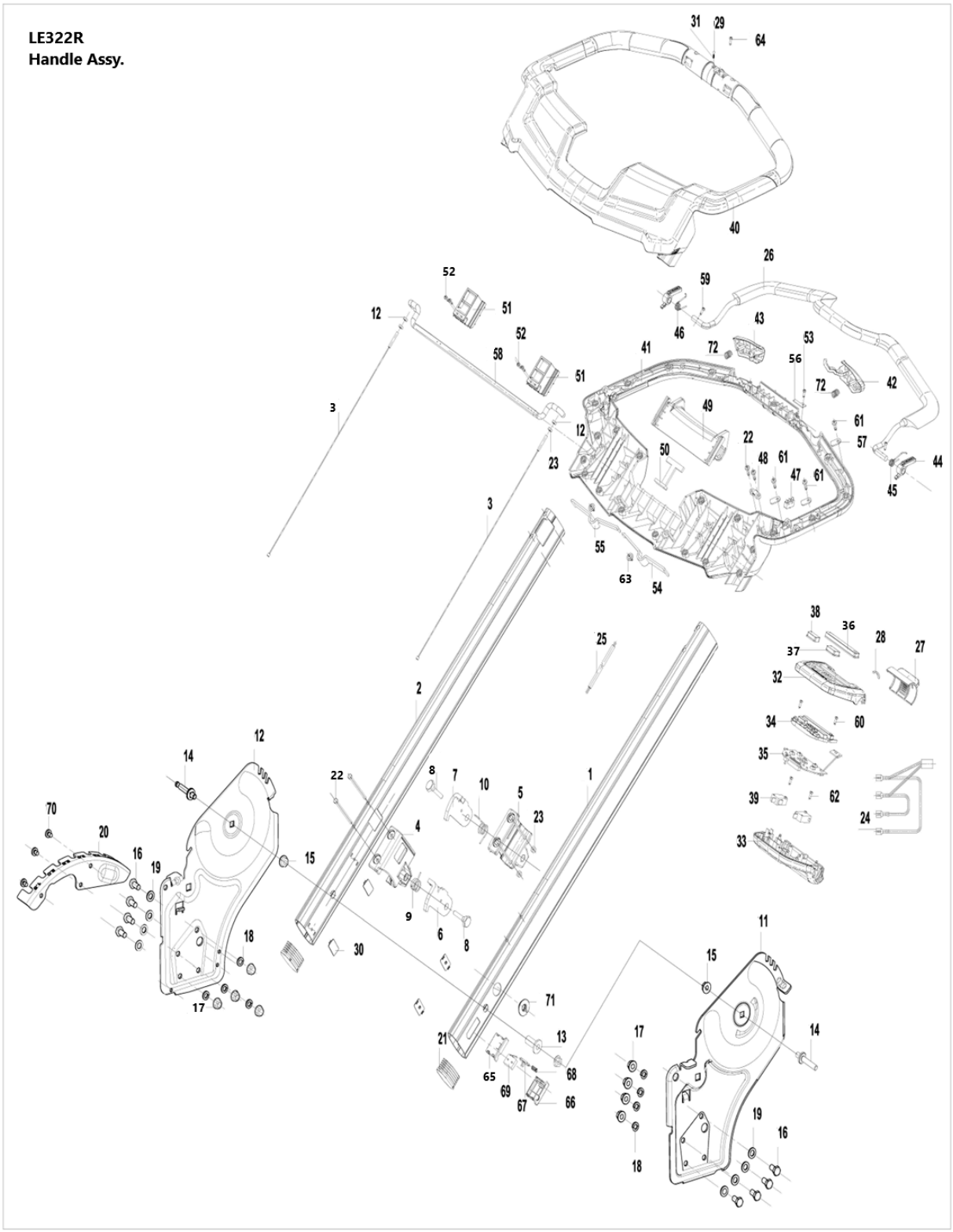

Ref.	Article N.	Description	Qty	Kit
1	537582146	COVER *Deck Front Cover*	1	-
2	537582147	BOARD *Rear Protection board*	1	-
3	538970601	DRIVE SCREW *Bolt, Deck Front Cover*	8	-

Ref.	Article N.	Description	Qty	Kit
4	587438201	SCREW *Grass Plate Fixing Bolt*	2	-
5	586698801	GUARD *Grass Pressing Plate*	1	-
6	537582148	COVER *Motor protection cover*	1	-
7	538970801	DRIVE SCREW *Bolt*	2	-
8	581726101	BOLT *Bolt*	1	-
9	537582149	COVER *Mounting bracket of self-propelled device protective cover*	1	-
10	537582150	COVER *Grass comb cover*	1	-
11	537582151	DECK *Deck*	1	-
12	538681301	SPRING *Rear Flap Torsion spring (Right)*	1	-
13	538970901	FLAP *Rear Flap*	1	-
14	538681401	SPRING *Rear Flap Torsion spring (Left)*	1	-
15	532413284	NUT *Torsion Spring Pin Nut*	2	-
16	587198901	BOLT *Torsion Spring Pin*	2	-
17	537582153	LINING *Deck liner 1*	1	-
18	537582154	LINING *Deck liner 2*	1	-
19	537582155	BOLT *Cross countersunk head tapping bolt st4x14*	10	-
20	537582156	HARNESS *Self propelled device harness sheath*	1	-
21	537582108	SCREW *Torx slotted pan head tapping screw*	33	-
1	537582158	FRONT AXLE ASSY *Front Wheel Axle Ass'y*	1	-
2	537582159	BOLT *Hexagon flange bolt M6x8*	4	-
3	532197480	O-RING *O shape ring*	2	-
4	532067725	WASHER	2	-

Ref.	Article N.	Description	Qty	Kit
		Washer		
5	537582160	WHEEL *Wheel Ass'y 8"*	2	-
6	532409148	NUT *Nut*	4	-
7	546598001	REAR AXLE *Liffting mechanism welding assembly*	1	-
8	538681101	CIRCLIP *Clip*	4	-
9	537582163	TRANSMISSION *Self-propelled device*	1	-
10	537582164	PLATE *Self-propelled device fixing plate*	1	-
11	537582165	SCREW *Cross recessed pan head screw*	1	-
12	538681201	DRIVE SCREW *M5 Nut*	3	-
13	537582167	BOLT *Cross tapping bolt ST4 8x12*	2	-
14	537582168	BEARING *Low speed bearing*	6	-
15	537582169	WHEEL *Wheel axle sleeve (11" wheel)*	2	-
16	501067001	WHEEL ASSY *Wheel Assy 11"*	2	-
17	537582170	GEAR *Driven gear*	2	-
18	537582171	BOLT *Wheel gear bolt*	6	-
19	587251701	DUST COVER *Wheel cap 11"*	2	-
20	532404845	PAWL *Gear Pin*	2	-
21	587232401	PINION *Driving Gear 11*	2	-
22	581127601	SCREW *Lifting mechanism fixing bolt*	4	-
23	537582172	PLATE *Lifting mechanism fixing plate*	2	-
24	537582173	SLEEVE *Lifting mechanism shaft sleeve*	2	-
25	537582174	SPRING *Height adjusting tension spring*	1	-

Ref.	Article N.	Description	Qty	Kit
26	537582175	SPRING *Height adjusting torsion spring*	1	-
27	537582176	COVER *Height adjusting handle (Left cover)*	1	-
28	537582177	COVER *Height adjusting handle (Right cover)*	1	-
29	537582178	PIN *Cotter pin*	1	-
30	537582179	SCREW *Cross recessed pan head tapping screw ST4 * 10*	2	-
31	537582180	ROD *Connecting rod*	1	-
32	537582181	NUT *M6 lock nut(blacking)*	2	-
33	537582182	CIRCLIP *Lifting mechanism open circlip*	2	-
34	537582183	ROD *Feight adjusting rod*	1	-
1	537582184	BAR *LT ALU EXTRUSION HANDLE BAR*	1	-
2	537582185	BAR *RT ALU EXTRUSION HANDLE BAR*	1	-
3	537582186	CABLE *FOLDING MECHANISM CABLE*	2	-
4	537582187	PLATE *FOLDING STOP PLATE (RIGHT)*	1	-
5	537582188	PLATE *FOLDING STOP PLATE (LEFT)*	1	-
6	537582189	PAWL *LIMIT PAWL (RIGHT)*	1	-
7	537582190	PAWL *LIMIT PAWL (LEFT)*	2	-
8	537582191	BOLT *FOLDING STOP PLATE BOLT*	1	-
9	537582192	SPRING *LIMIT PAWL TORSION SPRING RT*	1	-
10	537582193	SPRING *LIMIT PAWL TORSION SPRING LT*	1	-
11	537582194	BRACKET *EXTRUSION SUPPORT BRACKET LT*	1	-
12	537582195	BRACKET *EXTRUSION SUPPORT BRACKET RT*	2	-
13	537582196	SLEEVE	2	-

Ref.	Article N.	Description	Qty	Kit
		PUSH ROD LIMIT SLEEVE		
14	538971101	DRIVE SCREW *DRIVE SCREW LOWER EXTRUSION BO*	4	-
15	587599901	NUT *NUT.FLANGE.SERRAT.3125-18.5625*	8	-
16	537582197	FLANGE *HEXAGON FLANGE BOLT M8X16*	8	-
17	537582198	NUT *HEXAGON FLANGE NUT (M8)*	8	-
18	537582199	WASHER *ELASTIC WASHER 8*	8	-
19	537582201	WASHER *FLAT WASHER 8 GB T97.1*	1	-
20	537582202	PLATE *GEAR PLATE*	2	-
21	537582203	PLUG *EXTRUSION PLUG*	4	-
22	537582204	BOLT *HEXAGON HEAD BOLT M5X70*	2	-
23	537582205	BOLT *HEXAGON HEAD BOLT M5*	1	-
24	538971201	WIRING ASSY *PARALLEL WIRE HARNESS ASSY*	1	-
25	537582207	HARNESS *WIRE HARNESS ASSEMBLY*	1	-
26	537582210	LEVER *BRAKE LEVER*	1	-
27	537582211	BUTTON *SPEED ADJUSTMENT BUTTON*	1	-
28	537582212	MAGNET *HALL MAGNET*	1	-
29	537582213	STEEL *3 STEEL BALL*	1	-
30	538971301	GUSSET *GUSSET WEAR GASKET*	4	-
31	537582215	SPRING *STEEL BALL RETURN SPRING*	1	-
32	537582216	BOX *UPPER COVER OF SWITCH BOX*	1	-
33	537582217	BOX *LOWER COVER OF SWITCH BOX*	1	-
34	537582218	PLATE *SWITCH BOX BUTTON GUIDE PLATE*	1	-

Ref.	Article N.	Description	Qty	Kit
35	537582219	BOX *SWITCH BOX PCB*	1	-
36	537582220	BUTTON *TRIGGER BUTTON (BUTTON 1)*	1	-
37	537582221	BUTTON *POWER ON BUTTON (BUTTON 2)*	1	-
38	537582222	BUTTON *FUNCTION BUTTON (BUTTON 3)*	1	-
39	537582223	SWITCH *SELFPROPELL SWITCH MICROSWITCH*	2	-
40	537582224	COVER *HANDLE UPPER COVER*	1	-
41	537582225	COVER *HANDLE LOWER COVER*	1	-
42	537582226	BUTTON *ACCELERATION BUTTON (LEFT)*	1	-
43	537582227	BUTTON *ACCELERATION BUTTON (RIGHT)*	1	-
44	537582228	KNOB *BRAKE LEVER SHUT OFF KNOB*	2	-
45	537582229	SPRING *BRAKE LEVER RETURN SPRING LT*	1	-
46	537582230	SPRING *BRAKE LEVER RETURN SPRING RT*	1	-
47	537582231	SWITCH *BRAKE LEVER SWITCH*	1	-
48	537582232	PLATE *CRIMPING PLATE*	1	-
49	537582233	BUTTON *FOLDING BUTTON*	1	-
50	537582234	ROD *FOLDING BUTTON PUSH ROD*	1	-
51	537582235	STOPPER *CABLE STOPPER*	2	-
52	538971401	DRIVE SCREW *DRIVE SCREW M4X12*	4	-
53	538680801	DRIVE SCREW *SCREW SELF TAPPING*	1	-
54	537582238	ROD *CABLE CARRYING ROD 2*	1	-
55	537582239	ROD *CABLE CARRYING ROD 1*	1	-
56	537582240	PLATE	1	-

Ref.	Article N.	Description	Qty	Kit
		HNDL WIRE HARNESS PRESS PLATE1		
57	537582241	PLATE *HNDL WIRE HARNESS PRESS PLATE2*	3	-
58	537582242	ROD *STAY ROD*	1	-
59	538971501	DRIVE SCREW *DRIVE SCREW BOLT M4X16*	2	-
60	538971601	DRIVE SCREW *DRIVE SCREW ST3X10*	2	-
61	538970501	DRIVE SCREW *DRIVE SCREW TORX SCREW*	3	-
62	537582247	SCREW *SCREW PANHEAD ST4X10 W/WASHER*	2	-
63	538971901	WIRE *WIRE PLUG*	2	-
64	538971801	DRIVE SCREW *DRIVE SCREW BOLT ST3X8*	1	-
65	537582249	COVER *FOLDING SWITCH UPPER COVER*	1	-
66	537582250	COVER *FOLDING SWITCH LOWER COVER*	1	-
67	537582251	SWITCH *FOLDING SWITCH SLIDER*	1	-
68	537582252	SPRING *SPRING SWITCH SLIDER 5X0.7X13*	1	-
69	537582253	SWITCH *FOLDED SWITCH*	1	-
70	537582254	SCREW *SCREW PANHEAD M5X10*	3	-
71	538971901	WIRE *WIRE PLUG*	1	-
1	537582101	COVER *Upper Cover*	1	-
2	537582102	FLAP *Flap*	1	-
3	537582103	COVER *Left side cover*	1	-
4	537582104	COVER *Right side cover*	1	-
5	537582105	SPRING *Left torsion spring*	1	-
6	537582106	SPRING *Right torsion spring*	1	-

Ref.	Article N.	Description	Qty	Kit
7	537582107	FILTER *Filter sponge*	1	-
8	537582108	SCREW *Torx slotted pan head tapping screw*	36	-
9	537582109	SCREW *Hexagon socket Torx pan head tapping half thread screw*	2	-
10	537582110	CONTROL *USE BEFORE SERIAL # 20231500001 **REF #10 & REF #11 MUST BE ORDERED TOGETHER*	1	-
10	548309601	SERVICE KIT *USE AFTER SERIAL # 20231500001 **REF #10 & REF #11 MUST BE ORDERED TOGETHER*	1	-
11	537582111	CONTROL *USE BEFORE SERIAL # 20231500001 **REF #10 & REF #11 MUST BE ORDERED TOGETHER*	1	-
11	548309701	SERVICE KIT *USE AFTER SERIAL # 20231500001 **REF #10 & REF #11 MUST BE ORDERED TOGETHER*	1	-
12	537582112	CONTROL *Self propelled controller*	1	-
13	537582113	BLOCK *Terminal block*	2	-
14	537582114	CASE *Red terminal plastic case*	2	-
15	537582115	CASE *White terminal plastic case*	2	-
16	537582116	CASE *Blue plastic case*	2	-
17	537582117	CASE *Black terminal plastic case*	2	-
18	537582118	TERMINAL *Terminal*	6	-
19	537582119	PIN *Rolled elastic pin 2.5x11*	4	-
20	538969801	CONDUCTOR *Black Conductor*	2	-
21	537582120	CONDUCTOR *Sampling signal conductor*	1	-
22	537582121	BASE *Base*	1	-
23	537582122	CAP *Pop up cap*	4	-

Ref.	Article N.	Description	Qty	Kit
24	537582123	CASE *Battery compartment*	1	-
25	537582124	SHIELD *Wind shield*	1	-
26	537582125	COVER *Left lamp cover*	1	-
27	537582126	COVER *Right lamp cover*	1	-
28	537582127	HOLDER *Left lamp holder*	1	-
29	537582128	HOLDER *Right lamp holder*	1	-
30	537582129	PANEL *Left light panel ass'y*	1	-
31	537582130	PANEL *Right light panel ass'y*	1	-
32	537582131	SPRING *Ejector spring*	4	-
33	537582133	SCREW *Hexagon socket pattern pan head tapping screw*	6	-
34	537582134	MOTOR *Motor sit*	1	-
35	537582135	MOTOR *Brushless motor*	1	-
36	537582136	SCREW *Torx slotted pan head screw*	4	-
37	537582137	NUT *Hexagon thick nut*	4	-
38	537582138	CONDUCTOR *Self propelled /conductor*	1	-
39	537582139	PLATE *Crimping plate*	1	-
40	537582140	FAN *Fan*	1	-
41	537582141	BLADE *Blade*	1	-
42	538970201	DRIVE SCREW *Hexagon bolt (grade 10.9)*	1	-
43	538970301	SPRING *Spring washer*	1	-
44	538970401	RETAINER RING *Blade washer*	1	-
45	537582144	BOLT	3	-

Ref.	Article N.	Description	Qty	Kit
		Hexagon head bolt M10x20		
46	537582145	NUT *Hexagon lock nut*	3	-
47	538969901	CIRCUIT BREAKER *Magnetic ring assembly*	2	-
1	538971001	BAG FRAME *Grass catcher bag*	1	-
2	586922701	MULCHING PLUG *Mulching plug*	1	-
3	538680501	CHUTE *Side Discharge Chute*	1	-
4	586929102	BAG FRAME *Grass catcher bag bracket*	1	-

POWER HEAD

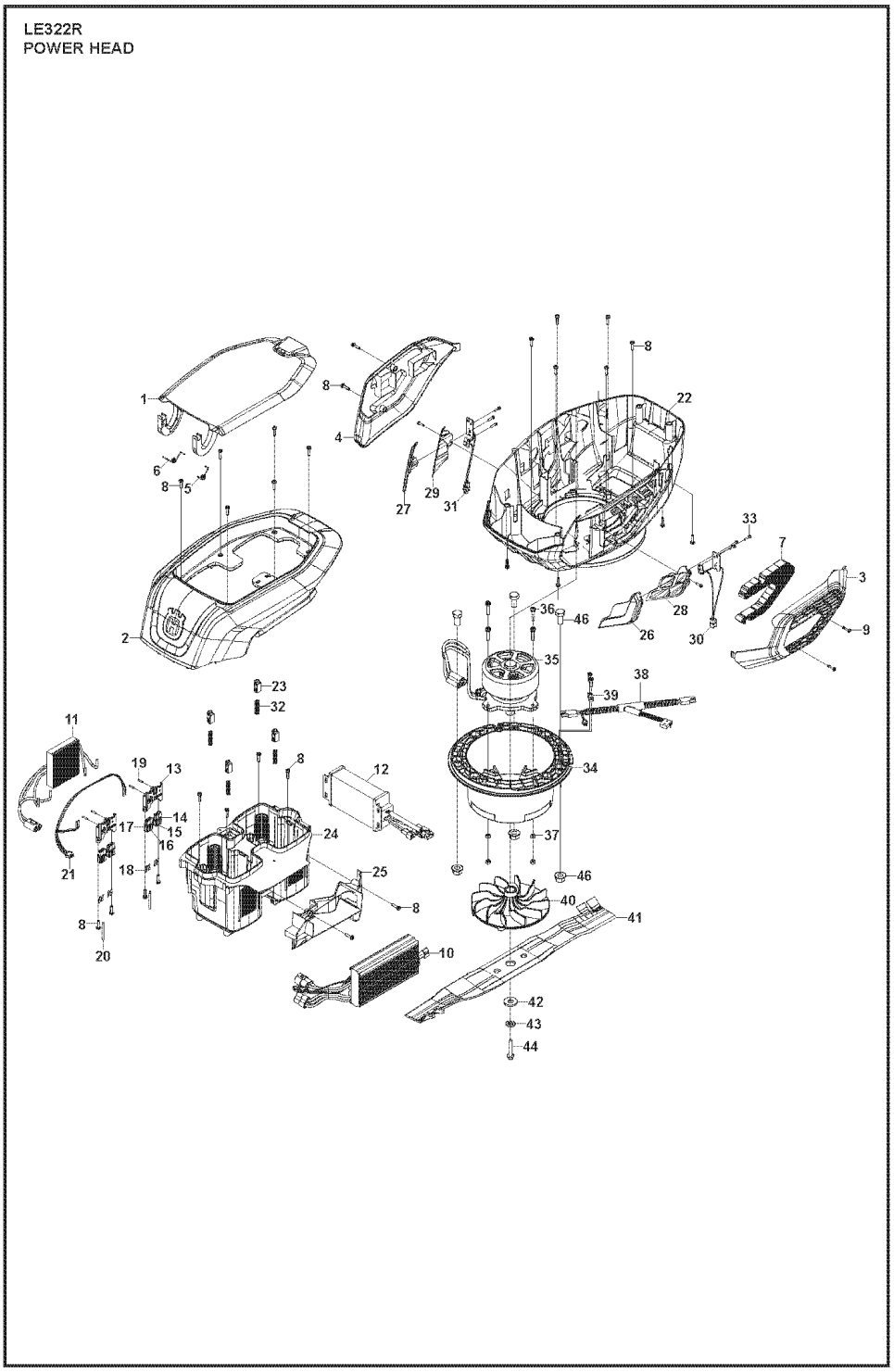

Ref.	Article N.	Description	Qty	Kit
1	537582146	COVER *Deck Front Cover*	1	-
2	537582147	BOARD *Rear Protection board*	1	-
3	538970601	DRIVE SCREW *Bolt, Deck Front Cover*	8	-

Ref.	Article N.	Description	Qty	Kit
4	587438201	SCREW *Grass Plate Fixing Bolt*	2	-
5	586698801	GUARD *Grass Pressing Plate*	1	-
6	537582148	COVER *Motor protection cover*	1	-
7	538970801	DRIVE SCREW *Bolt*	2	-
8	581726101	BOLT *Bolt*	1	-
9	537582149	COVER *Mounting bracket of self-propelled device protective cover*	1	-
10	537582150	COVER *Grass comb cover*	1	-
11	537582151	DECK *Deck*	1	-
12	538681301	SPRING *Rear Flap Torsion spring (Right)*	1	-
13	538970901	FLAP *Rear Flap*	1	-
14	538681401	SPRING *Rear Flap Torsion spring (Left)*	1	-
15	532413284	NUT *Torsion Spring Pin Nut*	2	-
16	587198901	BOLT *Torsion Spring Pin*	2	-
17	537582153	LINING *Deck liner 1*	1	-
18	537582154	LINING *Deck liner 2*	1	-
19	537582155	BOLT *Cross countersunk head tapping bolt st4x14*	10	-
20	537582156	HARNESS *Self propelled device harness sheath*	1	-
21	537582108	SCREW *Torx slotted pan head tapping screw*	33	-
1	537582158	FRONT AXLE ASSY *Front Wheel Axle Ass'y*	1	-
2	537582159	BOLT *Hexagon flange bolt M6x8*	4	-
3	532197480	O-RING *O shape ring*	2	-
4	532067725	WASHER	2	-

Ref.	Article N.	Description	Qty	Kit
		Washer		
5	537582160	WHEEL *Wheel Ass'y 8"*	2	-
6	532409148	NUT *Nut*	4	-
7	546598001	REAR AXLE *Liffting mechanism welding assembly*	1	-
8	538681101	CIRCLIP *Clip*	4	-
9	537582163	TRANSMISSION *Self-propelled device*	1	-
10	537582164	PLATE *Self-propelled device fixing plate*	1	-
11	537582165	SCREW *Cross recessed pan head screw*	1	-
12	538681201	DRIVE SCREW *M5 Nut*	3	-
13	537582167	BOLT *Cross tapping bolt ST4 8x12*	2	-
14	537582168	BEARING *Low speed bearing*	6	-
15	537582169	WHEEL *Wheel axle sleeve (11" wheel)*	2	-
16	501067001	WHEEL ASSY *Wheel Assy 11"*	2	-
17	537582170	GEAR *Driven gear*	2	-
18	537582171	BOLT *Wheel gear bolt*	6	-
19	587251701	DUST COVER *Wheel cap 11"*	2	-
20	532404845	PAWL *Gear Pin*	2	-
21	587232401	PINION *Driving Gear 11*	2	-
22	581127601	SCREW *Lifting mechanism fixing bolt*	4	-
23	537582172	PLATE *Lifting mechanism fixing plate*	2	-
24	537582173	SLEEVE *Lifting mechanism shaft sleeve*	2	-
25	537582174	SPRING *Height adjusting tension spring*	1	-

Ref.	Article N.	Description	Qty	Kit
26	537582175	SPRING *Height adjusting torsion spring*	1	-
27	537582176	COVER *Height adjusting handle (Left cover)*	1	-
28	537582177	COVER *Height adjusting handle (Right cover)*	1	-
29	537582178	PIN *Cotter pin*	1	-
30	537582179	SCREW *Cross recessed pan head tapping screw ST4 * 10*	2	-
31	537582180	ROD *Connecting rod*	1	-
32	537582181	NUT *M6 lock nut(blacking)*	2	-
33	537582182	CIRCLIP *Lifting mechanism open circlip*	2	-
34	537582183	ROD *Feight adjusting rod*	1	-
1	537582184	BAR *LT ALU EXTRUSION HANDLE BAR*	1	-
2	537582185	BAR *RT ALU EXTRUSION HANDLE BAR*	1	-
3	537582186	CABLE *FOLDING MECHANISM CABLE*	2	-
4	537582187	PLATE *FOLDING STOP PLATE (RIGHT)*	1	-
5	537582188	PLATE *FOLDING STOP PLATE (LEFT)*	1	-
6	537582189	PAWL *LIMIT PAWL (RIGHT)*	1	-
7	537582190	PAWL *LIMIT PAWL (LEFT)*	2	-
8	537582191	BOLT *FOLDING STOP PLATE BOLT*	1	-
9	537582192	SPRING *LIMIT PAWL TORSION SPRING RT*	1	-
10	537582193	SPRING *LIMIT PAWL TORSION SPRING LT*	1	-
11	537582194	BRACKET *EXTRUSION SUPPORT BRACKET LT*	1	-
12	537582195	BRACKET *EXTRUSION SUPPORT BRACKET RT*	2	-
13	537582196	SLEEVE	2	-

Ref.	Article N.	Description	Qty	Kit
		PUSH ROD LIMIT SLEEVE		
14	538971101	DRIVE SCREW *DRIVE SCREW LOWER EXTRUSION BO*	4	-
15	587599901	NUT *NUT.FLANGE.SERRAT.3125-18.5625*	8	-
16	537582197	FLANGE *HEXAGON FLANGE BOLT M8X16*	8	-
17	537582198	NUT *HEXAGON FLANGE NUT (M8)*	8	-
18	537582199	WASHER *ELASTIC WASHER 8*	8	-
19	537582201	WASHER *FLAT WASHER 8 GB T97.1*	1	-
20	537582202	PLATE *GEAR PLATE*	2	-
21	537582203	PLUG *EXTRUSION PLUG*	4	-
22	537582204	BOLT *HEXAGON HEAD BOLT M5X70*	2	-
23	537582205	BOLT *HEXAGON HEAD BOLT M5*	1	-
24	538971201	WIRING ASSY *PARALLEL WIRE HARNESS ASSY*	1	-
25	537582207	HARNESS *WIRE HARNESS ASSEMBLY*	1	-
26	537582210	LEVER *BRAKE LEVER*	1	-
27	537582211	BUTTON *SPEED ADJUSTMENT BUTTON*	1	-
28	537582212	MAGNET *HALL MAGNET*	1	-
29	537582213	STEEL *3 STEEL BALL*	1	-
30	538971301	GUSSET *GUSSET WEAR GASKET*	4	-
31	537582215	SPRING *STEEL BALL RETURN SPRING*	1	-
32	537582216	BOX *UPPER COVER OF SWITCH BOX*	1	-
33	537582217	BOX *LOWER COVER OF SWITCH BOX*	1	-
34	537582218	PLATE *SWITCH BOX BUTTON GUIDE PLATE*	1	-

Ref.	Article N.	Description	Qty	Kit
35	537582219	BOX *SWITCH BOX PCB*	1	-
36	537582220	BUTTON *TRIGGER BUTTON (BUTTON 1)*	1	-
37	537582221	BUTTON *POWER ON BUTTON (BUTTON 2)*	1	-
38	537582222	BUTTON *FUNCTION BUTTON (BUTTON 3)*	1	-
39	537582223	SWITCH *SELFPROPELL SWITCH MICROSWITCH*	2	-
40	537582224	COVER *HANDLE UPPER COVER*	1	-
41	537582225	COVER *HANDLE LOWER COVER*	1	-
42	537582226	BUTTON *ACCELERATION BUTTON (LEFT)*	1	-
43	537582227	BUTTON *ACCELERATION BUTTON (RIGHT)*	1	-
44	537582228	KNOB *BRAKE LEVER SHUT OFF KNOB*	2	-
45	537582229	SPRING *BRAKE LEVER RETURN SPRING LT*	1	-
46	537582230	SPRING *BRAKE LEVER RETURN SPRING RT*	1	-
47	537582231	SWITCH *BRAKE LEVER SWITCH*	1	-
48	537582232	PLATE *CRIMPING PLATE*	1	-
49	537582233	BUTTON *FOLDING BUTTON*	1	-
50	537582234	ROD *FOLDING BUTTON PUSH ROD*	1	-
51	537582235	STOPPER *CABLE STOPPER*	2	-
52	538971401	DRIVE SCREW *DRIVE SCREW M4X12*	4	-
53	538680801	DRIVE SCREW *SCREW SELF TAPPING*	1	-
54	537582238	ROD *CABLE CARRYING ROD 2*	1	-
55	537582239	ROD *CABLE CARRYING ROD 1*	1	-
56	537582240	PLATE	1	-

Ref.	Article N.	Description	Qty	Kit
		HNDL WIRE HARNESS PRESS PLATE1		
57	537582241	PLATE *HNDL WIRE HARNESS PRESS PLATE2*	3	-
58	537582242	ROD *STAY ROD*	1	-
59	538971501	DRIVE SCREW *DRIVE SCREW BOLT M4X16*	2	-
60	538971601	DRIVE SCREW *DRIVE SCREW ST3X10*	2	-
61	538970501	DRIVE SCREW *DRIVE SCREW TORX SCREW*	3	-
62	537582247	SCREW *SCREW PANHEAD ST4X10 W/WASHER*	2	-
63	538971901	WIRE *WIRE PLUG*	2	-
64	538971801	DRIVE SCREW *DRIVE SCREW BOLT ST3X8*	1	-
65	537582249	COVER *FOLDING SWITCH UPPER COVER*	1	-
66	537582250	COVER *FOLDING SWITCH LOWER COVER*	1	-
67	537582251	SWITCH *FOLDING SWITCH SLIDER*	1	-
68	537582252	SPRING *SPRING SWITCH SLIDER 5X0.7X13*	1	-
69	537582253	SWITCH *FOLDED SWITCH*	1	-
70	537582254	SCREW *SCREW PANHEAD M5X10*	3	-
71	538971901	WIRE *WIRE PLUG*	1	-
1	537582101	COVER *Upper Cover*	1	-
2	537582102	FLAP *Flap*	1	-
3	537582103	COVER *Left side cover*	1	-
4	537582104	COVER *Right side cover*	1	-
5	537582105	SPRING *Left torsion spring*	1	-
6	537582106	SPRING *Right torsion spring*	1	-

Ref.	Article N.	Description	Qty	Kit
7	537582107	FILTER *Filter sponge*	1	-
8	537582108	SCREW *Torx slotted pan head tapping screw*	36	-
9	537582109	SCREW *Hexagon socket Torx pan head tapping half thread screw*	2	-
10	537582110	CONTROL *USE BEFORE SERIAL # 20231500001 **REF #10 & REF #11 MUST BE ORDERED TOGETHER*	1	-
10	548309601	SERVICE KIT *USE AFTER SERIAL # 20231500001 **REF #10 & REF #11 MUST BE ORDERED TOGETHER*	1	-
11	537582111	CONTROL *USE BEFORE SERIAL # 20231500001 **REF #10 & REF #11 MUST BE ORDERED TOGETHER*	1	-
11	548309701	SERVICE KIT *USE AFTER SERIAL # 20231500001 **REF #10 & REF #11 MUST BE ORDERED TOGETHER*	1	-
12	537582112	CONTROL *Self propelled controller*	1	-
13	537582113	BLOCK *Terminal block*	2	-
14	537582114	CASE *Red terminal plastic case*	2	-
15	537582115	CASE *White terminal plastic case*	2	-
16	537582116	CASE *Blue plastic case*	2	-
17	537582117	CASE *Black terminal plastic case*	2	-
18	537582118	TERMINAL *Terminal*	6	-
19	537582119	PIN *Rolled elastic pin 2.5x11*	4	-
20	538969801	CONDUCTOR *Black Conductor*	2	-
21	537582120	CONDUCTOR *Sampling signal conductor*	1	-
22	537582121	BASE *Base*	1	-
23	537582122	CAP *Pop up cap*	4	-

Ref.	Article N.	Description	Qty	Kit
24	537582123	CASE *Battery compartment*	1	-
25	537582124	SHIELD *Wind shield*	1	-
26	537582125	COVER *Left lamp cover*	1	-
27	537582126	COVER *Right lamp cover*	1	-
28	537582127	HOLDER *Left lamp holder*	1	-
29	537582128	HOLDER *Right lamp holder*	1	-
30	537582129	PANEL *Left light panel ass'y*	1	-
31	537582130	PANEL *Right light panel ass'y*	1	-
32	537582131	SPRING *Ejector spring*	4	-
33	537582133	SCREW *Hexagon socket pattern pan head tapping screw*	6	-
34	537582134	MOTOR *Motor sit*	1	-
35	537582135	MOTOR *Brushless motor*	1	-
36	537582136	SCREW *Torx slotted pan head screw*	4	-
37	537582137	NUT *Hexagon thick nut*	4	-
38	537582138	CONDUCTOR *Self propelled /conductor*	1	-
39	537582139	PLATE *Crimping plate*	1	-
40	537582140	FAN *Fan*	1	-
41	537582141	BLADE *Blade*	1	-
42	538970201	DRIVE SCREW *Hexagon bolt (grade 10.9)*	1	-
43	538970301	SPRING *Spring washer*	1	-
44	538970401	RETAINER RING *Blade washer*	1	-
45	537582144	BOLT	3	-

Ref.	Article N.	Description	Qty	Kit
		Hexagon head bolt M10x20		
46	537582145	NUT *Hexagon lock nut*	3	-
47	538969901	CIRCUIT BREAKER *Magnetic ring assembly*	2	-
1	538971001	BAG FRAME *Grass catcher bag*	1	-
2	586922701	MULCHING PLUG *Mulching plug*	1	-
3	538680501	CHUTE *Side Discharge Chute*	1	-
4	586929102	BAG FRAME *Grass catcher bag bracket*	1	-

BAGGER

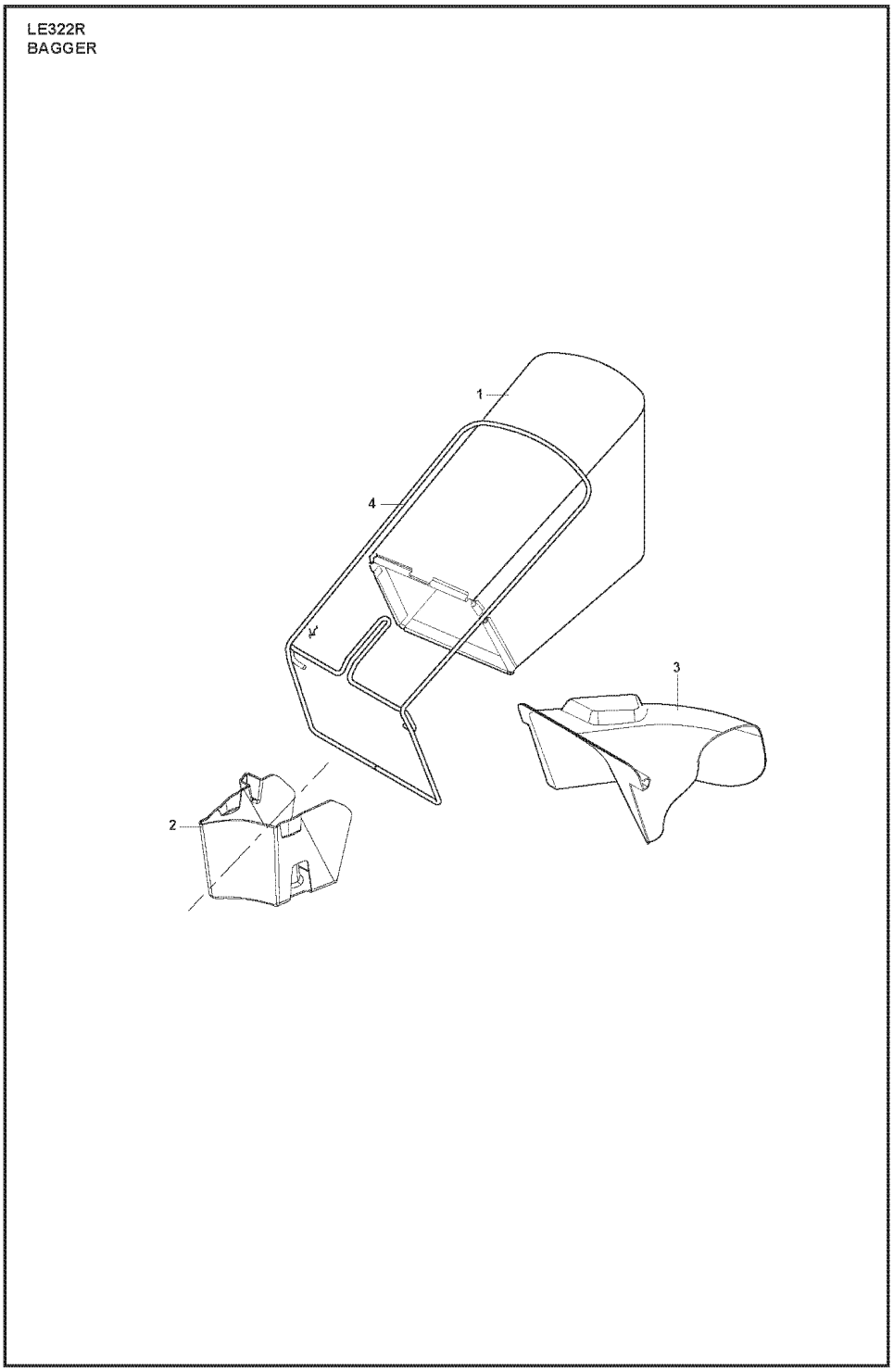

Ref.	Article N.	Description	Qty	Kit
1	537582146	COVER *Deck Front Cover*	1	-
2	537582147	BOARD *Rear Protection board*	1	-
3	538970601	DRIVE SCREW *Bolt, Deck Front Cover*	8	-

Ref.	Article N.	Description	Qty	Kit
4	587438201	SCREW *Grass Plate Fixing Bolt*	2	-
5	586698801	GUARD *Grass Pressing Plate*	1	-
6	537582148	COVER *Motor protection cover*	1	-
7	538970801	DRIVE SCREW *Bolt*	2	-
8	581726101	BOLT *Bolt*	1	-
9	537582149	COVER *Mounting bracket of self-propelled device protective cover*	1	-
10	537582150	COVER *Grass comb cover*	1	-
11	537582151	DECK *Deck*	1	-
12	538681301	SPRING *Rear Flap Torsion spring (Right)*	1	-
13	538970901	FLAP *Rear Flap*	1	-
14	538681401	SPRING *Rear Flap Torsion spring (Left)*	1	-
15	532413284	NUT *Torsion Spring Pin Nut*	2	-
16	587198901	BOLT *Torsion Spring Pin*	2	-
17	537582153	LINING *Deck liner 1*	1	-
18	537582154	LINING *Deck liner 2*	1	-
19	537582155	BOLT *Cross countersunk head tapping bolt st4x14*	10	-
20	537582156	HARNESS *Self propelled device harness sheath*	1	-
21	537582108	SCREW *Torx slotted pan head tapping screw*	33	-
1	537582158	FRONT AXLE ASSY *Front Wheel Axle Ass'y*	1	-
2	537582159	BOLT *Hexagon flange bolt M6x8*	4	-
3	532197480	O-RING *O shape ring*	2	-
4	532067725	WASHER	2	-

Ref.	Article N.	Description	Qty	Kit
		Washer		
5	537582160	WHEEL *Wheel Ass'y 8"*	2	-
6	532409148	NUT *Nut*	4	-
7	546598001	REAR AXLE *Liffting mechanism welding assembly*	1	-
8	538681101	CIRCLIP *Clip*	4	-
9	537582163	TRANSMISSION *Self-propelled device*	1	-
10	537582164	PLATE *Self-propelled device fixing plate*	1	-
11	537582165	SCREW *Cross recessed pan head screw*	1	-
12	538681201	DRIVE SCREW *M5 Nut*	3	-
13	537582167	BOLT *Cross tapping bolt ST4 8x12*	2	-
14	537582168	BEARING *Low speed bearing*	6	-
15	537582169	WHEEL *Wheel axle sleeve (11" wheel)*	2	-
16	501067001	WHEEL ASSY *Wheel Assy 11"*	2	-
17	537582170	GEAR *Driven gear*	2	-
18	537582171	BOLT *Wheel gear bolt*	6	-
19	587251701	DUST COVER *Wheel cap 11"*	2	-
20	532404845	PAWL *Gear Pin*	2	-
21	587232401	PINION *Driving Gear 11*	2	-
22	581127601	SCREW *Lifting mechanism fixing bolt*	4	-
23	537582172	PLATE *Lifting mechanism fixing plate*	2	-
24	537582173	SLEEVE *Lifting mechanism shaft sleeve*	2	-
25	537582174	SPRING *Height adjusting tension spring*	1	-

Ref.	Article N.	Description	Qty	Kit
26	537582175	SPRING *Height adjusting torsion spring*	1	-
27	537582176	COVER *Height adjusting handle (Left cover)*	1	-
28	537582177	COVER *Height adjusting handle (Right cover)*	1	-
29	537582178	PIN *Cotter pin*	1	-
30	537582179	SCREW *Cross recessed pan head tapping screw ST4 * 10*	2	-
31	537582180	ROD *Connecting rod*	1	-
32	537582181	NUT *M6 lock nut(blacking)*	2	-
33	537582182	CIRCLIP *Lifting mechanism open circlip*	2	-
34	537582183	ROD *Feight adjusting rod*	1	-
1	537582184	BAR *LT ALU EXTRUSION HANDLE BAR*	1	-
2	537582185	BAR *RT ALU EXTRUSION HANDLE BAR*	1	-
3	537582186	CABLE *FOLDING MECHANISM CABLE*	2	-
4	537582187	PLATE *FOLDING STOP PLATE (RIGHT)*	1	-
5	537582188	PLATE *FOLDING STOP PLATE (LEFT)*	1	-
6	537582189	PAWL *LIMIT PAWL (RIGHT)*	1	-
7	537582190	PAWL *LIMIT PAWL (LEFT)*	2	-
8	537582191	BOLT *FOLDING STOP PLATE BOLT*	1	-
9	537582192	SPRING *LIMIT PAWL TORSION SPRING RT*	1	-
10	537582193	SPRING *LIMIT PAWL TORSION SPRING LT*	1	-
11	537582194	BRACKET *EXTRUSION SUPPORT BRACKET LT*	1	-
12	537582195	BRACKET *EXTRUSION SUPPORT BRACKET RT*	2	-
13	537582196	SLEEVE	2	-

Ref.	Article N.	Description	Qty	Kit
		PUSH ROD LIMIT SLEEVE		
14	538971101	DRIVE SCREW *DRIVE SCREW LOWER EXTRUSION BO*	4	-
15	587599901	NUT *NUT.FLANGE.SERRAT.3125-18.5625*	8	-
16	537582197	FLANGE *HEXAGON FLANGE BOLT M8X16*	8	-
17	537582198	NUT *HEXAGON FLANGE NUT (M8)*	8	-
18	537582199	WASHER *ELASTIC WASHER 8*	8	-
19	537582201	WASHER *FLAT WASHER 8 GB T97.1*	1	-
20	537582202	PLATE *GEAR PLATE*	2	-
21	537582203	PLUG *EXTRUSION PLUG*	4	-
22	537582204	BOLT *HEXAGON HEAD BOLT M5X70*	2	-
23	537582205	BOLT *HEXAGON HEAD BOLT M5*	1	-
24	538971201	WIRING ASSY *PARALLEL WIRE HARNESS ASSY*	1	-
25	537582207	HARNESS *WIRE HARNESS ASSEMBLY*	1	-
26	537582210	LEVER *BRAKE LEVER*	1	-
27	537582211	BUTTON *SPEED ADJUSTMENT BUTTON*	1	-
28	537582212	MAGNET *HALL MAGNET*	1	-
29	537582213	STEEL *3 STEEL BALL*	1	-
30	538971301	GUSSET *GUSSET WEAR GASKET*	4	-
31	537582215	SPRING *STEEL BALL RETURN SPRING*	1	-
32	537582216	BOX *UPPER COVER OF SWITCH BOX*	1	-
33	537582217	BOX *LOWER COVER OF SWITCH BOX*	1	-
34	537582218	PLATE *SWITCH BOX BUTTON GUIDE PLATE*	1	-

Ref.	Article N.	Description	Qty	Kit
35	537582219	BOX *SWITCH BOX PCB*	1	-
36	537582220	BUTTON *TRIGGER BUTTON (BUTTON 1)*	1	-
37	537582221	BUTTON *POWER ON BUTTON (BUTTON 2)*	1	-
38	537582222	BUTTON *FUNCTION BUTTON (BUTTON 3)*	1	-
39	537582223	SWITCH *SELFPROPELL SWITCH MICROSWITCH*	2	-
40	537582224	COVER *HANDLE UPPER COVER*	1	-
41	537582225	COVER *HANDLE LOWER COVER*	1	-
42	537582226	BUTTON *ACCELERATION BUTTON (LEFT)*	1	-
43	537582227	BUTTON *ACCELERATION BUTTON (RIGHT)*	1	-
44	537582228	KNOB *BRAKE LEVER SHUT OFF KNOB*	2	-
45	537582229	SPRING *BRAKE LEVER RETURN SPRING LT*	1	-
46	537582230	SPRING *BRAKE LEVER RETURN SPRING RT*	1	-
47	537582231	SWITCH *BRAKE LEVER SWITCH*	1	-
48	537582232	PLATE *CRIMPING PLATE*	1	-
49	537582233	BUTTON *FOLDING BUTTON*	1	-
50	537582234	ROD *FOLDING BUTTON PUSH ROD*	1	-
51	537582235	STOPPER *CABLE STOPPER*	2	-
52	538971401	DRIVE SCREW *DRIVE SCREW M4X12*	4	-
53	538680801	DRIVE SCREW *SCREW SELF TAPPING*	1	-
54	537582238	ROD *CABLE CARRYING ROD 2*	1	-
55	537582239	ROD *CABLE CARRYING ROD 1*	1	-
56	537582240	PLATE	1	-

Ref.	Article N.	Description	Qty	Kit
		HNDL WIRE HARNESS PRESS PLATE1		
57	537582241	PLATE *HNDL WIRE HARNESS PRESS PLATE2*	3	-
58	537582242	ROD *STAY ROD*	1	-
59	538971501	DRIVE SCREW *DRIVE SCREW BOLT M4X16*	2	-
60	538971601	DRIVE SCREW *DRIVE SCREW ST3X10*	2	-
61	538970501	DRIVE SCREW *DRIVE SCREW TORX SCREW*	3	-
62	537582247	SCREW *SCREW PANHEAD ST4X10 W/WASHER*	2	-
63	538971901	WIRE *WIRE PLUG*	2	-
64	538971801	DRIVE SCREW *DRIVE SCREW BOLT ST3X8*	1	-
65	537582249	COVER *FOLDING SWITCH UPPER COVER*	1	-
66	537582250	COVER *FOLDING SWITCH LOWER COVER*	1	-
67	537582251	SWITCH *FOLDING SWITCH SLIDER*	1	-
68	537582252	SPRING *SPRING SWITCH SLIDER 5X0.7X13*	1	-
69	537582253	SWITCH *FOLDED SWITCH*	1	-
70	537582254	SCREW *SCREW PANHEAD M5X10*	3	-
71	538971901	WIRE *WIRE PLUG*	1	-
1	537582101	COVER *Upper Cover*	1	-
2	537582102	FLAP *Flap*	1	-
3	537582103	COVER *Left side cover*	1	-
4	537582104	COVER *Right side cover*	1	-
5	537582105	SPRING *Left torsion spring*	1	-
6	537582106	SPRING *Right torsion spring*	1	-

Ref.	Article N.	Description	Qty	Kit
7	537582107	FILTER *Filter sponge*	1	-
8	537582108	SCREW *Torx slotted pan head tapping screw*	36	-
9	537582109	SCREW *Hexagon socket Torx pan head tapping half thread screw*	2	-
10	537582110	CONTROL *USE BEFORE SERIAL # 20231500001 **REF #10 & REF #11 MUST BE ORDERED TOGETHER*	1	-
10	548309601	SERVICE KIT *USE AFTER SERIAL # 20231500001 **REF #10 & REF #11 MUST BE ORDERED TOGETHER*	1	-
11	537582111	CONTROL *USE BEFORE SERIAL # 20231500001 **REF #10 & REF #11 MUST BE ORDERED TOGETHER*	1	-
11	548309701	SERVICE KIT *USE AFTER SERIAL # 20231500001 **REF #10 & REF #11 MUST BE ORDERED TOGETHER*	1	-
12	537582112	CONTROL *Self propelled controller*	1	-
13	537582113	BLOCK *Terminal block*	2	-
14	537582114	CASE *Red terminal plastic case*	2	-
15	537582115	CASE *White terminal plastic case*	2	-
16	537582116	CASE *Blue plastic case*	2	-
17	537582117	CASE *Black terminal plastic case*	2	-
18	537582118	TERMINAL *Terminal*	6	-
19	537582119	PIN *Rolled elastic pin 2.5x11*	4	-
20	538969801	CONDUCTOR *Black Conductor*	2	-
21	537582120	CONDUCTOR *Sampling signal conductor*	1	-
22	537582121	BASE *Base*	1	-
23	537582122	CAP *Pop up cap*	4	-

Ref.	Article N.	Description	Qty	Kit
24	537582123	CASE *Battery compartment*	1	-
25	537582124	SHIELD *Wind shield*	1	-
26	537582125	COVER *Left lamp cover*	1	-
27	537582126	COVER *Right lamp cover*	1	-
28	537582127	HOLDER *Left lamp holder*	1	-
29	537582128	HOLDER *Right lamp holder*	1	-
30	537582129	PANEL *Left light panel ass'y*	1	-
31	537582130	PANEL *Right light panel ass'y*	1	-
32	537582131	SPRING *Ejector spring*	4	-
33	537582133	SCREW *Hexagon socket pattern pan head tapping screw*	6	-
34	537582134	MOTOR *Motor sit*	1	-
35	537582135	MOTOR *Brushless motor*	1	-
36	537582136	SCREW *Torx slotted pan head screw*	4	-
37	537582137	NUT *Hexagon thick nut*	4	-
38	537582138	CONDUCTOR *Self propelled /conductor*	1	-
39	537582139	PLATE *Crimping plate*	1	-
40	537582140	FAN *Fan*	1	-
41	537582141	BLADE *Blade*	1	-
42	538970201	DRIVE SCREW *Hexagon bolt (grade 10.9)*	1	-
43	538970301	SPRING *Spring washer*	1	-
44	538970401	RETAINER RING *Blade washer*	1	-
45	537582144	BOLT	3	-

Ref.	Article N.	Description	Qty	Kit
		Hexagon head bolt M10x20		
46	537582145	NUT *Hexagon lock nut*	3	-
47	538969901	CIRCUIT BREAKER *Magnetic ring assembly*	2	-
1	538971001	BAG FRAME *Grass catcher bag*	1	-
2	586922701	MULCHING PLUG *Mulching plug*	1	-
3	538680501	CHUTE *Side Discharge Chute*	1	-
4	586929102	BAG FRAME *Grass catcher bag bracket*	1	-