# Product Catalog: Husqvarna/LE322R

## DECK

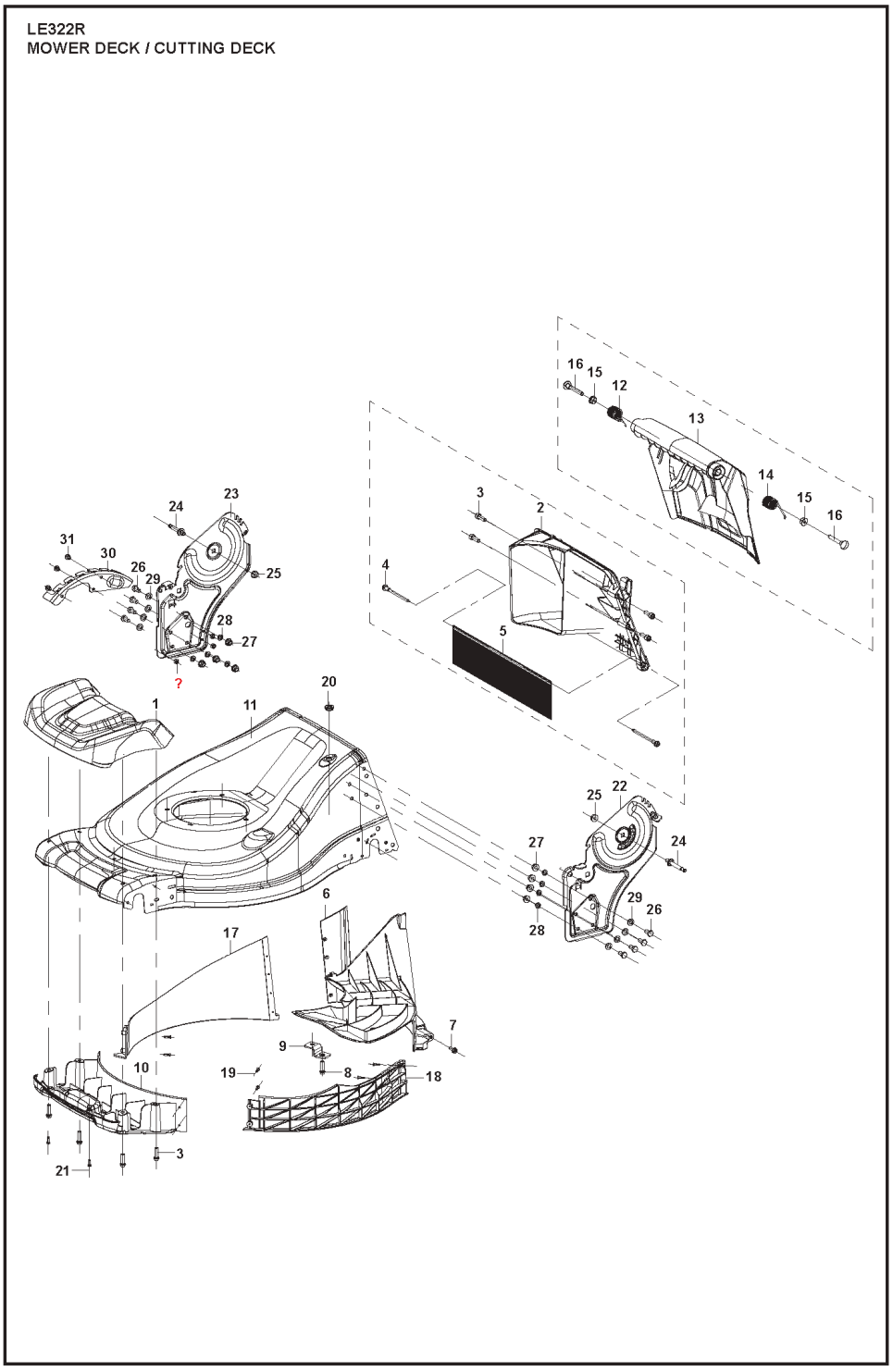

| Ref. | Article N. | Description | Qty | Kit |
|---|---|---|---|---|
| 1 | 537582146 | COVER<br>*Deck Front Cover* | 1 | - |
| 2 | 537582147 | BOARD<br>*Rear Protection board* | 1 | - |
| 3 | 538970601 | DRIVE SCREW<br>*Bolt, Deck Front Cover* | 8 | - |
| 4 | 587438201 | SCREW<br>*Grass Plate Fixing Bolt* | 2 | - |
| 5 | 586698801 | GUARD<br>*Grass Pressing Plate* | 1 | - |
| 6 | 537582148 | COVER<br>*Motor protection cover* | 1 | - |
| 7 | 538970801 | DRIVE SCREW<br>*Bolt* | 2 | - |
| 8 | 581726101 | BOLT<br>*Bolt* | 1 | - |
| 9 | 537582149 | COVER<br>*Mounting bracket of self-propelled device protective cover* | 1 | - |
| 10 | 537582150 | COVER<br>*Grass comb cover* | 1 | - |
| 11 | 537582151 | DECK<br>*Deck* | 1 | - |
| 12 | 538681301 | SPRING<br>*Rear Flap Torsion spring (Right)* | 1 | - |
| 13 | 538970901 | FLAP<br>*Rear Flap* | 1 | - |
| 14 | 538681401 | SPRING<br>*Rear Flap Torsion spring (Left)* | 1 | - |
| 15 | 532413284 | NUT<br>*Torsion Spring Pin Nut* | 2 | - |
| 16 | 587198901 | BOLT<br>*Torsion Spring Pin* | 2 | - |
| 17 | 537582153 | LINING<br>*Deck liner 1* | 1 | - |
| 18 | 537582154 | LINING<br>*Deck liner 2* | 1 | - |
| 19 | 537582155 | BOLT<br>*Cross countersunk head tapping bolt st4x14* | 10 | - |
| 20 | 537582156 | HARNESS<br>*Self propelled device harness sheath* | 1 | - |
| 21 | 537582108 | SCREW<br>*Torx slotted pan head tapping screw* | 33 | - |
| 1 | 537582158 | FRONT AXLE ASSY | 1 | - |

| Ref. | Article N. | Description | Qty | Kit |
|---|---|---|---|---|
| | | *Front Wheel Axle Ass'y* | | |
| 2 | 537582159 | BOLT<br>*Hexagon flange bolt M6x8* | 4 | - |
| 3 | 532197480 | O-RING<br>*O shape ring* | 2 | - |
| 4 | 532067725 | WASHER<br>*Washer* | 2 | - |
| 5 | 537582160 | WHEEL<br>*Wheel Ass'y 8"* | 2 | - |
| 6 | 532409148 | NUT<br>*Nut* | 4 | - |
| 7 | 546598001 | REAR AXLE<br>*Liffting mechanism welding assembly* | 1 | - |
| 8 | 538681101 | CIRCLIP<br>*Clip* | 4 | - |
| 9 | 537582163 | TRANSMISSION<br>*Self-propelled device* | 1 | - |
| 10 | 537582164 | PLATE<br>*Self-propelled device fixing plate* | 1 | - |
| 11 | 537582165 | SCREW<br>*Cross recessed pan head screw* | 1 | - |
| 12 | 538681201 | DRIVE SCREW<br>*M5 Nut* | 3 | - |
| 13 | 537582167 | BOLT<br>*Cross tapping bolt ST4 8x12* | 2 | - |
| 14 | 537582168 | BEARING<br>*Low speed bearing* | 6 | - |
| 15 | 537582169 | WHEEL<br>*Wheel axle sleeve (11" wheel)* | 2 | - |
| 16 | 501067001 | WHEEL ASSY<br>*Wheel Assy 11"* | 2 | - |
| 17 | 537582170 | GEAR<br>*Driven gear* | 2 | - |
| 18 | 537582171 | BOLT<br>*Wheel gear bolt* | 6 | - |
| 19 | 587251701 | DUST COVER<br>*Wheel cap 11"* | 2 | - |
| 20 | 532404845 | PAWL<br>*Gear Pin* | 2 | - |
| 21 | 587232401 | PINION<br>*Driving Gear 11* | 2 | - |
| 22 | 581127601 | SCREW<br>*Lifting mechanism fixing bolt* | 4 | - |

| Ref. | Article N. | Description | Qty | Kit |
|---|---|---|---|---|
| 23 | 537582172 | PLATE<br>*Lifting mechanism fixing plate* | 2 | - |
| 24 | 537582173 | SLEEVE<br>*Lifting mechanism shaft sleeve* | 2 | - |
| 25 | 537582174 | SPRING<br>*Height adjusting tension spring* | 1 | - |
| 26 | 537582175 | SPRING<br>*Height adjusting torsion spring* | 1 | - |
| 27 | 537582176 | COVER<br>*Height adjusting handle (Left cover)* | 1 | - |
| 28 | 537582177 | COVER<br>*Height adjusting handle (Right cover)* | 1 | - |
| 29 | 537582178 | PIN<br>*Cotter pin* | 1 | - |
| 30 | 537582179 | SCREW<br>*Cross recessed pan head tapping screw ST4 * 10* | 2 | - |
| 31 | 537582180 | ROD<br>*Connecting rod* | 1 | - |
| 32 | 537582181 | NUT<br>*M6 lock nut(blacking)* | 2 | - |
| 33 | 537582182 | CIRCLIP<br>*Lifting mechanism open circlip* | 2 | - |
| 34 | 537582183 | ROD<br>*Feight adjusting rod* | 1 | - |
| 1 | 537582184 | BAR<br>*LT ALU EXTRUSION HANDLE BAR* | 1 | - |
| 2 | 537582185 | BAR<br>*RT ALU EXTRUSION HANDLE BAR* | 1 | - |
| 3 | 537582186 | CABLE<br>*FOLDING MECHANISM CABLE* | 2 | - |
| 4 | 537582187 | PLATE<br>*FOLDING STOP PLATE (RIGHT)* | 1 | - |
| 5 | 537582188 | PLATE<br>*FOLDING STOP PLATE (LEFT)* | 1 | - |
| 6 | 537582189 | PAWL<br>*LIMIT PAWL (RIGHT)* | 1 | - |
| 7 | 537582190 | PAWL<br>*LIMIT PAWL (LEFT)* | 2 | - |
| 8 | 537582191 | BOLT<br>*FOLDING STOP PLATE BOLT* | 1 | - |
| 9 | 537582192 | SPRING<br>*LIMIT PAWL TORSION SPRING RT* | 1 | - |
| 10 | 537582193 | SPRING | 1 | - |

| Ref. | Article N. | Description | Qty | Kit |
|---|---|---|---|---|
| | | *LIMIT PAWL TORSION SPRING LT* | | |
| 11 | 537582194 | BRACKET<br>*EXTRUSION SUPPORT BRACKET LT* | 1 | - |
| 12 | 537582195 | BRACKET<br>*EXTRUSION SUPPORT BRACKET RT* | 2 | - |
| 13 | 537582196 | SLEEVE<br>*PUSH ROD LIMIT SLEEVE* | 2 | - |
| 14 | 538971101 | DRIVE SCREW<br>*DRIVE SCREW LOWER EXTRUSION BO* | 4 | - |
| 15 | 587599901 | NUT<br>*NUT.FLANGE.SERRAT.3125-18.5625* | 8 | - |
| 16 | 537582197 | FLANGE<br>*HEXAGON FLANGE BOLT M8X16* | 8 | - |
| 17 | 537582198 | NUT<br>*HEXAGON FLANGE NUT (M8)* | 8 | - |
| 18 | 537582199 | WASHER<br>*ELASTIC WASHER 8* | 8 | - |
| 19 | 537582201 | WASHER<br>*FLAT WASHER 8 GB T97.1* | 1 | - |
| 20 | 537582202 | PLATE<br>*GEAR PLATE* | 2 | - |
| 21 | 537582203 | PLUG<br>*EXTRUSION PLUG* | 4 | - |
| 22 | 537582204 | BOLT<br>*HEXAGON HEAD BOLT M5X70* | 2 | - |
| 23 | 537582205 | BOLT<br>*HEXAGON HEAD BOLT M5* | 1 | - |
| 24 | 538971201 | WIRING ASSY<br>*PARALLEL WIRE HARNESS ASSY* | 1 | - |
| 25 | 537582207 | HARNESS<br>*WIRE HARNESS ASSEMBLY* | 1 | - |
| 26 | 537582210 | LEVER<br>*BRAKE LEVER* | 1 | - |
| 27 | 537582211 | BUTTON<br>*SPEED ADJUSTMENT BUTTON* | 1 | - |
| 28 | 537582212 | MAGNET<br>*HALL MAGNET* | 1 | - |
| 29 | 537582213 | STEEL<br>*3 STEEL BALL* | 1 | - |
| 30 | 538971301 | GUSSET<br>*GUSSET WEAR GASKET* | 4 | - |
| 31 | 537582215 | SPRING<br>*STEEL BALL RETURN SPRING* | 1 | - |

| Ref. | Article N. | Description | Qty | Kit |
|---|---|---|---|---|
| 32 | 537582216 | BOX<br>*UPPER COVER OF SWITCH BOX* | 1 | - |
| 33 | 537582217 | BOX<br>*LOWER COVER OF SWITCH BOX* | 1 | - |
| 34 | 537582218 | PLATE<br>*SWITCH BOX BUTTON GUIDE PLATE* | 1 | - |
| 35 | 537582219 | BOX<br>*SWITCH BOX PCB* | 1 | - |
| 36 | 537582220 | BUTTON<br>*TRIGGER BUTTON (BUTTON 1)* | 1 | - |
| 37 | 537582221 | BUTTON<br>*POWER ON BUTTON (BUTTON 2)* | 1 | - |
| 38 | 537582222 | BUTTON<br>*FUNCTION BUTTON (BUTTON 3)* | 1 | - |
| 39 | 537582223 | SWITCH<br>*SELFPROPELL SWITCH MICROSWITCH* | 2 | - |
| 40 | 537582224 | COVER<br>*HANDLE UPPER COVER* | 1 | - |
| 41 | 537582225 | COVER<br>*HANDLE LOWER COVER* | 1 | - |
| 42 | 537582226 | BUTTON<br>*ACCELERATION BUTTON (LEFT)* | 1 | - |
| 43 | 537582227 | BUTTON<br>*ACCELERATION BUTTON (RIGHT)* | 1 | - |
| 44 | 537582228 | KNOB<br>*BRAKE LEVER SHUT OFF KNOB* | 2 | - |
| 45 | 537582229 | SPRING<br>*BRAKE LEVER RETURN SPRING LT* | 1 | - |
| 46 | 537582230 | SPRING<br>*BRAKE LEVER RETURN SPRING RT* | 1 | - |
| 47 | 537582231 | SWITCH<br>*BRAKE LEVER SWITCH* | 1 | - |
| 48 | 537582232 | PLATE<br>*CRIMPING PLATE* | 1 | - |
| 49 | 537582233 | BUTTON<br>*FOLDING BUTTON* | 1 | - |
| 50 | 537582234 | ROD<br>*FOLDING BUTTON PUSH ROD* | 1 | - |
| 51 | 537582235 | STOPPER<br>*CABLE STOPPER* | 2 | - |
| 52 | 538971401 | DRIVE SCREW<br>*DRIVE SCREW M4X12* | 4 | - |
| 53 | 538680801 | DRIVE SCREW | 1 | - |

| Ref. | Article N. | Description | Qty | Kit |
|---|---|---|---|---|
| | | *SCREW SELF TAPPING* | | |
| 54 | 537582238 | ROD<br>*CABLE CARRYING ROD 2* | 1 | - |
| 55 | 537582239 | ROD<br>*CABLE CARRYING ROD 1* | 1 | - |
| 56 | 537582240 | PLATE<br>*HNDL WIRE HARNESS PRESS PLATE1* | 1 | - |
| 57 | 537582241 | PLATE<br>*HNDL WIRE HARNESS PRESS PLATE2* | 3 | - |
| 58 | 537582242 | ROD<br>*STAY ROD* | 1 | - |
| 59 | 538971501 | DRIVE SCREW<br>*DRIVE SCREW BOLT M4X16* | 2 | - |
| 60 | 538971601 | DRIVE SCREW<br>*DRIVE SCREW ST3X10* | 2 | - |
| 61 | 538970501 | DRIVE SCREW<br>*DRIVE SCREW TORX SCREW* | 3 | - |
| 62 | 537582247 | SCREW<br>*SCREW PANHEAD ST4X10 W/WASHER* | 2 | - |
| 63 | 538971901 | WIRE<br>*WIRE PLUG* | 2 | - |
| 64 | 538971801 | DRIVE SCREW<br>*DRIVE SCREW BOLT ST3X8* | 1 | - |
| 65 | 537582249 | COVER<br>*FOLDING SWITCH UPPER COVER* | 1 | - |
| 66 | 537582250 | COVER<br>*FOLDING SWITCH LOWER COVER* | 1 | - |
| 67 | 537582251 | SWITCH<br>*FOLDING SWITCH SLIDER* | 1 | - |
| 68 | 537582252 | SPRING<br>*SPRING SWITCH SLIDER 5X0.7X13* | 1 | - |
| 69 | 537582253 | SWITCH<br>*FOLDED SWITCH* | 1 | - |
| 70 | 537582254 | SCREW<br>*SCREW PANHEAD M5X10* | 3 | - |
| 71 | 538971901 | WIRE<br>*WIRE PLUG* | 1 | - |
| 1 | 537582101 | COVER<br>*Upper Cover* | 1 | - |
| 2 | 537582102 | FLAP<br>*Flap* | 1 | - |
| 3 | 537582103 | COVER<br>*Left side cover* | 1 | - |

| Ref. | Article N. | Description | Qty | Kit |
|---|---|---|---|---|
| 4 | 537582104 | COVER<br>*Right side cover* | 1 | - |
| 5 | 537582105 | SPRING<br>*Left torsion spring* | 1 | - |
| 6 | 537582106 | SPRING<br>*Right torsion spring* | 1 | - |
| 7 | 537582107 | FILTER<br>*Filter sponge* | 1 | - |
| 8 | 537582108 | SCREW<br>*Torx slotted pan head tapping screw* | 36 | - |
| 9 | 537582109 | SCREW<br>*Hexagon socket Torx pan head tapping half thread screw* | 2 | - |
| 10 | 537582110 | CONTROL<br>*USE BEFORE SERIAL # 20231500001 **REF #10 & REF #11 MUST BE ORDERED TOGETHER* | 1 | - |
| 10 | 548309601 | SERVICE KIT<br>*USE AFTER SERIAL # 20231500001 **REF #10 & REF #11 MUST BE ORDERED TOGETHER* | 1 | - |
| 11 | 537582111 | CONTROL<br>*USE BEFORE SERIAL # 20231500001 **REF #10 & REF #11 MUST BE ORDERED TOGETHER* | 1 | - |
| 11 | 548309701 | SERVICE KIT<br>*USE AFTER SERIAL # 20231500001 **REF #10 & REF #11 MUST BE ORDERED TOGETHER* | 1 | - |
| 12 | 537582112 | CONTROL<br>*Self propelled controller* | 1 | - |
| 13 | 537582113 | BLOCK<br>*Terminal block* | 2 | - |
| 14 | 537582114 | CASE<br>*Red terminal plastic case* | 2 | - |
| 15 | 537582115 | CASE<br>*White terminal plastic case* | 2 | - |
| 16 | 537582116 | CASE<br>*Blue plastic case* | 2 | - |
| 17 | 537582117 | CASE<br>*Black terminal plastic case* | 2 | - |
| 18 | 537582118 | TERMINAL<br>*Terminal* | 6 | - |
| 19 | 537582119 | PIN<br>*Rolled elastic pin 2.5x11* | 4 | - |
| 20 | 538969801 | CONDUCTOR<br>*Black Conductor* | 2 | - |

| Ref. | Article N. | Description | Qty | Kit |
|---|---|---|---|---|
| 21 | 537582120 | CONDUCTOR<br>*Sampling signal conductor* | 1 | - |
| 22 | 537582121 | BASE<br>*Base* | 1 | - |
| 23 | 537582122 | CAP<br>*Pop up cap* | 4 | - |
| 24 | 537582123 | CASE<br>*Battery compartment* | 1 | - |
| 25 | 537582124 | SHIELD<br>*Wind shield* | 1 | - |
| 26 | 537582125 | COVER<br>*Left lamp cover* | 1 | - |
| 27 | 537582126 | COVER<br>*Right lamp cover* | 1 | - |
| 28 | 537582127 | HOLDER<br>*Left lamp holder* | 1 | - |
| 29 | 537582128 | HOLDER<br>*Right lamp holder* | 1 | - |
| 30 | 537582129 | PANEL<br>*Left light panel ass'y* | 1 | - |
| 31 | 537582130 | PANEL<br>*Right light panel ass'y* | 1 | - |
| 32 | 537582131 | SPRING<br>*Ejector spring* | 4 | - |
| 33 | 537582133 | SCREW<br>*Hexagon socket pattern pan head tapping screw* | 6 | - |
| 34 | 537582134 | MOTOR<br>*Motor sit* | 1 | - |
| 35 | 537582135 | MOTOR<br>*Brushless motor* | 1 | - |
| 36 | 537582136 | SCREW<br>*Torx slotted pan head screw* | 4 | - |
| 37 | 537582137 | NUT<br>*Hexagon thick nut* | 4 | - |
| 38 | 537582138 | CONDUCTOR<br>*Self propelled /conductor* | 1 | - |
| 39 | 537582139 | PLATE<br>*Crimping plate* | 1 | - |
| 40 | 537582140 | FAN<br>*Fan* | 1 | - |
| 41 | 537582141 | BLADE<br>*Blade* | 1 | - |
| 42 | 538970201 | DRIVE SCREW | 1 | - |

| Ref. | Article N. | Description | Qty | Kit |
|---|---|---|---|---|
| | | *Hexagon bolt (grade 10.9)* | | |
| 43 | 538970301 | SPRING<br>*Spring washer* | 1 | - |
| 44 | 538970401 | RETAINER RING<br>*Blade washer* | 1 | - |
| 45 | 537582144 | BOLT<br>*Hexagon head bolt M10x20* | 3 | - |
| 46 | 537582145 | NUT<br>*Hexagon lock nut* | 3 | - |
| 47 | 538969901 | CIRCUIT BREAKER<br>*Magnetic ring assembly* | 2 | - |
| 1 | 538971001 | BAG FRAME<br>*Grass catcher bag* | 1 | - |
| 2 | 586922701 | MULCHING PLUG<br>*Mulching plug* | 1 | - |
| 3 | 538680501 | CHUTE<br>*Side Discharge Chute* | 1 | - |
| 4 | 586929102 | BAG FRAME<br>*Grass catcher bag bracket* | 1 | - |

## DRIVE

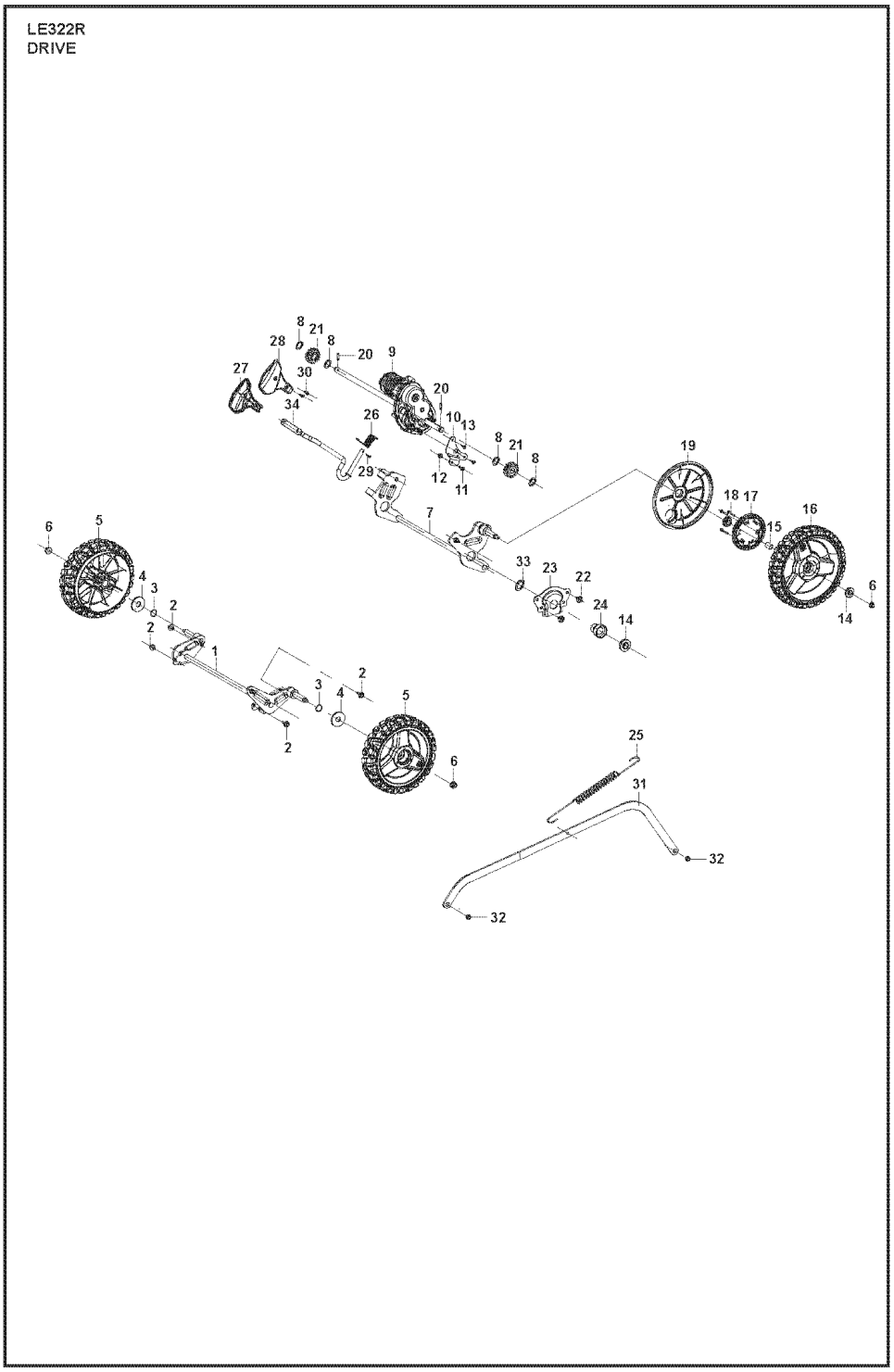


| Ref. | Article N. | Description | Qty | Kit |
|---|---|---|---|---|
| 1 | 537582146 | COVER<br>*Deck Front Cover* | 1 | - |
| 2 | 537582147 | BOARD<br>*Rear Protection board* | 1 | - |
| 3 | 538970601 | DRIVE SCREW<br>*Bolt, Deck Front Cover* | 8 | - |

| Ref. | Article N. | Description | Qty | Kit |
|---|---|---|---|---|
| 4 | 587438201 | SCREW<br>*Grass Plate Fixing Bolt* | 2 | - |
| 5 | 586698801 | GUARD<br>*Grass Pressing Plate* | 1 | - |
| 6 | 537582148 | COVER<br>*Motor protection cover* | 1 | - |
| 7 | 538970801 | DRIVE SCREW<br>*Bolt* | 2 | - |
| 8 | 581726101 | BOLT<br>*Bolt* | 1 | - |
| 9 | 537582149 | COVER<br>*Mounting bracket of self-propelled device protective cover* | 1 | - |
| 10 | 537582150 | COVER<br>*Grass comb cover* | 1 | - |
| 11 | 537582151 | DECK<br>*Deck* | 1 | - |
| 12 | 538681301 | SPRING<br>*Rear Flap Torsion spring (Right)* | 1 | - |
| 13 | 538970901 | FLAP<br>*Rear Flap* | 1 | - |
| 14 | 538681401 | SPRING<br>*Rear Flap Torsion spring (Left)* | 1 | - |
| 15 | 532413284 | NUT<br>*Torsion Spring Pin Nut* | 2 | - |
| 16 | 587198901 | BOLT<br>*Torsion Spring Pin* | 2 | - |
| 17 | 537582153 | LINING<br>*Deck liner 1* | 1 | - |
| 18 | 537582154 | LINING<br>*Deck liner 2* | 1 | - |
| 19 | 537582155 | BOLT<br>*Cross countersunk head tapping bolt st4x14* | 10 | - |
| 20 | 537582156 | HARNESS<br>*Self propelled device harness sheath* | 1 | - |
| 21 | 537582108 | SCREW<br>*Torx slotted pan head tapping screw* | 33 | - |
| 1 | 537582158 | FRONT AXLE ASSY<br>*Front Wheel Axle Ass'y* | 1 | - |
| 2 | 537582159 | BOLT<br>*Hexagon flange bolt M6x8* | 4 | - |
| 3 | 532197480 | O-RING<br>*O shape ring* | 2 | - |
| 4 | 532067725 | WASHER | 2 | - |

| Ref. | Article N. | Description | Qty | Kit |
|---|---|---|---|---|
| | | *Washer* | | |
| 5 | 537582160 | WHEEL<br>*Wheel Ass'y 8"* | 2 | - |
| 6 | 532409148 | NUT<br>*Nut* | 4 | - |
| 7 | 546598001 | REAR AXLE<br>*Liffting mechanism welding assembly* | 1 | - |
| 8 | 538681101 | CIRCLIP<br>*Clip* | 4 | - |
| 9 | 537582163 | TRANSMISSION<br>*Self-propelled device* | 1 | - |
| 10 | 537582164 | PLATE<br>*Self-propelled device fixing plate* | 1 | - |
| 11 | 537582165 | SCREW<br>*Cross recessed pan head screw* | 1 | - |
| 12 | 538681201 | DRIVE SCREW<br>*M5 Nut* | 3 | - |
| 13 | 537582167 | BOLT<br>*Cross tapping bolt ST4 8x12* | 2 | - |
| 14 | 537582168 | BEARING<br>*Low speed bearing* | 6 | - |
| 15 | 537582169 | WHEEL<br>*Wheel axle sleeve (11" wheel)* | 2 | - |
| 16 | 501067001 | WHEEL ASSY<br>*Wheel Assy 11"* | 2 | - |
| 17 | 537582170 | GEAR<br>*Driven gear* | 2 | - |
| 18 | 537582171 | BOLT<br>*Wheel gear bolt* | 6 | - |
| 19 | 587251701 | DUST COVER<br>*Wheel cap 11"* | 2 | - |
| 20 | 532404845 | PAWL<br>*Gear Pin* | 2 | - |
| 21 | 587232401 | PINION<br>*Driving Gear 11* | 2 | - |
| 22 | 581127601 | SCREW<br>*Lifting mechanism fixing bolt* | 4 | - |
| 23 | 537582172 | PLATE<br>*Lifting mechanism fixing plate* | 2 | - |
| 24 | 537582173 | SLEEVE<br>*Lifting mechanism shaft sleeve* | 2 | - |
| 25 | 537582174 | SPRING<br>*Height adjusting tension spring* | 1 | - |

| Ref. | Article N. | Description | Qty | Kit |
|---|---|---|---|---|
| 26 | 537582175 | SPRING<br>*Height adjusting torsion spring* | 1 | - |
| 27 | 537582176 | COVER<br>*Height adjusting handle (Left cover)* | 1 | - |
| 28 | 537582177 | COVER<br>*Height adjusting handle (Right cover)* | 1 | - |
| 29 | 537582178 | PIN<br>*Cotter pin* | 1 | - |
| 30 | 537582179 | SCREW<br>*Cross recessed pan head tapping screw ST4 * 10* | 2 | - |
| 31 | 537582180 | ROD<br>*Connecting rod* | 1 | - |
| 32 | 537582181 | NUT<br>*M6 lock nut(blacking)* | 2 | - |
| 33 | 537582182 | CIRCLIP<br>*Lifting mechanism open circlip* | 2 | - |
| 34 | 537582183 | ROD<br>*Feight adjusting rod* | 1 | - |
| 1 | 537582184 | BAR<br>*LT ALU EXTRUSION HANDLE BAR* | 1 | - |
| 2 | 537582185 | BAR<br>*RT ALU EXTRUSION HANDLE BAR* | 1 | - |
| 3 | 537582186 | CABLE<br>*FOLDING MECHANISM CABLE* | 2 | - |
| 4 | 537582187 | PLATE<br>*FOLDING STOP PLATE (RIGHT)* | 1 | - |
| 5 | 537582188 | PLATE<br>*FOLDING STOP PLATE (LEFT)* | 1 | - |
| 6 | 537582189 | PAWL<br>*LIMIT PAWL (RIGHT)* | 1 | - |
| 7 | 537582190 | PAWL<br>*LIMIT PAWL (LEFT)* | 2 | - |
| 8 | 537582191 | BOLT<br>*FOLDING STOP PLATE BOLT* | 1 | - |
| 9 | 537582192 | SPRING<br>*LIMIT PAWL TORSION SPRING RT* | 1 | - |
| 10 | 537582193 | SPRING<br>*LIMIT PAWL TORSION SPRING LT* | 1 | - |
| 11 | 537582194 | BRACKET<br>*EXTRUSION SUPPORT BRACKET LT* | 1 | - |
| 12 | 537582195 | BRACKET<br>*EXTRUSION SUPPORT BRACKET RT* | 2 | - |
| 13 | 537582196 | SLEEVE | 2 | - |

| Ref. | Article N. | Description | Qty | Kit |
|---|---|---|---|---|
| | | *PUSH ROD LIMIT SLEEVE* | | |
| 14 | 538971101 | DRIVE SCREW<br>*DRIVE SCREW LOWER EXTRUSION BO* | 4 | - |
| 15 | 587599901 | NUT<br>*NUT.FLANGE.SERRAT.3125-18.5625* | 8 | - |
| 16 | 537582197 | FLANGE<br>*HEXAGON FLANGE BOLT M8X16* | 8 | - |
| 17 | 537582198 | NUT<br>*HEXAGON FLANGE NUT (M8)* | 8 | - |
| 18 | 537582199 | WASHER<br>*ELASTIC WASHER 8* | 8 | - |
| 19 | 537582201 | WASHER<br>*FLAT WASHER 8 GB T97.1* | 1 | - |
| 20 | 537582202 | PLATE<br>*GEAR PLATE* | 2 | - |
| 21 | 537582203 | PLUG<br>*EXTRUSION PLUG* | 4 | - |
| 22 | 537582204 | BOLT<br>*HEXAGON HEAD BOLT M5X70* | 2 | - |
| 23 | 537582205 | BOLT<br>*HEXAGON HEAD BOLT M5* | 1 | - |
| 24 | 538971201 | WIRING ASSY<br>*PARALLEL WIRE HARNESS ASSY* | 1 | - |
| 25 | 537582207 | HARNESS<br>*WIRE HARNESS ASSEMBLY* | 1 | - |
| 26 | 537582210 | LEVER<br>*BRAKE LEVER* | 1 | - |
| 27 | 537582211 | BUTTON<br>*SPEED ADJUSTMENT BUTTON* | 1 | - |
| 28 | 537582212 | MAGNET<br>*HALL MAGNET* | 1 | - |
| 29 | 537582213 | STEEL<br>*3 STEEL BALL* | 1 | - |
| 30 | 538971301 | GUSSET<br>*GUSSET WEAR GASKET* | 4 | - |
| 31 | 537582215 | SPRING<br>*STEEL BALL RETURN SPRING* | 1 | - |
| 32 | 537582216 | BOX<br>*UPPER COVER OF SWITCH BOX* | 1 | - |
| 33 | 537582217 | BOX<br>*LOWER COVER OF SWITCH BOX* | 1 | - |
| 34 | 537582218 | PLATE<br>*SWITCH BOX BUTTON GUIDE PLATE* | 1 | - |

| Ref. | Article N. | Description | Qty | Kit |
|---|---|---|---|---|
| 35 | 537582219 | BOX<br>*SWITCH BOX PCB* | 1 | - |
| 36 | 537582220 | BUTTON<br>*TRIGGER BUTTON (BUTTON 1)* | 1 | - |
| 37 | 537582221 | BUTTON<br>*POWER ON BUTTON (BUTTON 2)* | 1 | - |
| 38 | 537582222 | BUTTON<br>*FUNCTION BUTTON (BUTTON 3)* | 1 | - |
| 39 | 537582223 | SWITCH<br>*SELFPROPELL SWITCH MICROSWITCH* | 2 | - |
| 40 | 537582224 | COVER<br>*HANDLE UPPER COVER* | 1 | - |
| 41 | 537582225 | COVER<br>*HANDLE LOWER COVER* | 1 | - |
| 42 | 537582226 | BUTTON<br>*ACCELERATION BUTTON (LEFT)* | 1 | - |
| 43 | 537582227 | BUTTON<br>*ACCELERATION BUTTON (RIGHT)* | 1 | - |
| 44 | 537582228 | KNOB<br>*BRAKE LEVER SHUT OFF KNOB* | 2 | - |
| 45 | 537582229 | SPRING<br>*BRAKE LEVER RETURN SPRING LT* | 1 | - |
| 46 | 537582230 | SPRING<br>*BRAKE LEVER RETURN SPRING RT* | 1 | - |
| 47 | 537582231 | SWITCH<br>*BRAKE LEVER SWITCH* | 1 | - |
| 48 | 537582232 | PLATE<br>*CRIMPING PLATE* | 1 | - |
| 49 | 537582233 | BUTTON<br>*FOLDING BUTTON* | 1 | - |
| 50 | 537582234 | ROD<br>*FOLDING BUTTON PUSH ROD* | 1 | - |
| 51 | 537582235 | STOPPER<br>*CABLE STOPPER* | 2 | - |
| 52 | 538971401 | DRIVE SCREW<br>*DRIVE SCREW M4X12* | 4 | - |
| 53 | 538680801 | DRIVE SCREW<br>*SCREW SELF TAPPING* | 1 | - |
| 54 | 537582238 | ROD<br>*CABLE CARRYING ROD 2* | 1 | - |
| 55 | 537582239 | ROD<br>*CABLE CARRYING ROD 1* | 1 | - |
| 56 | 537582240 | PLATE | 1 | - |

| Ref. | Article N. | Description | Qty | Kit |
|---|---|---|---|---|
| | | *HNDL WIRE HARNESS PRESS PLATE1* | | |
| 57 | 537582241 | PLATE<br>*HNDL WIRE HARNESS PRESS PLATE2* | 3 | - |
| 58 | 537582242 | ROD<br>*STAY ROD* | 1 | - |
| 59 | 538971501 | DRIVE SCREW<br>*DRIVE SCREW BOLT M4X16* | 2 | - |
| 60 | 538971601 | DRIVE SCREW<br>*DRIVE SCREW ST3X10* | 2 | - |
| 61 | 538970501 | DRIVE SCREW<br>*DRIVE SCREW TORX SCREW* | 3 | - |
| 62 | 537582247 | SCREW<br>*SCREW PANHEAD ST4X10 W/WASHER* | 2 | - |
| 63 | 538971901 | WIRE<br>*WIRE PLUG* | 2 | - |
| 64 | 538971801 | DRIVE SCREW<br>*DRIVE SCREW BOLT ST3X8* | 1 | - |
| 65 | 537582249 | COVER<br>*FOLDING SWITCH UPPER COVER* | 1 | - |
| 66 | 537582250 | COVER<br>*FOLDING SWITCH LOWER COVER* | 1 | - |
| 67 | 537582251 | SWITCH<br>*FOLDING SWITCH SLIDER* | 1 | - |
| 68 | 537582252 | SPRING<br>*SPRING SWITCH SLIDER 5X0.7X13* | 1 | - |
| 69 | 537582253 | SWITCH<br>*FOLDED SWITCH* | 1 | - |
| 70 | 537582254 | SCREW<br>*SCREW PANHEAD M5X10* | 3 | - |
| 71 | 538971901 | WIRE<br>*WIRE PLUG* | 1 | - |
| 1 | 537582101 | COVER<br>*Upper Cover* | 1 | - |
| 2 | 537582102 | FLAP<br>*Flap* | 1 | - |
| 3 | 537582103 | COVER<br>*Left side cover* | 1 | - |
| 4 | 537582104 | COVER<br>*Right side cover* | 1 | - |
| 5 | 537582105 | SPRING<br>*Left torsion spring* | 1 | - |
| 6 | 537582106 | SPRING<br>*Right torsion spring* | 1 | - |

| Ref. | Article N. | Description | Qty | Kit |
|---|---|---|---|---|
| 7 | 537582107 | FILTER<br>*Filter sponge* | 1 | - |
| 8 | 537582108 | SCREW<br>*Torx slotted pan head tapping screw* | 36 | - |
| 9 | 537582109 | SCREW<br>*Hexagon socket Torx pan head tapping half thread screw* | 2 | - |
| 10 | 537582110 | CONTROL<br>*USE BEFORE SERIAL # 20231500001 **REF #10 & REF #11 MUST BE ORDERED TOGETHER* | 1 | - |
| 10 | 548309601 | SERVICE KIT<br>*USE AFTER SERIAL # 20231500001 **REF #10 & REF #11 MUST BE ORDERED TOGETHER* | 1 | - |
| 11 | 537582111 | CONTROL<br>*USE BEFORE SERIAL # 20231500001 **REF #10 & REF #11 MUST BE ORDERED TOGETHER* | 1 | - |
| 11 | 548309701 | SERVICE KIT<br>*USE AFTER SERIAL # 20231500001 **REF #10 & REF #11 MUST BE ORDERED TOGETHER* | 1 | - |
| 12 | 537582112 | CONTROL<br>*Self propelled controller* | 1 | - |
| 13 | 537582113 | BLOCK<br>*Terminal block* | 2 | - |
| 14 | 537582114 | CASE<br>*Red terminal plastic case* | 2 | - |
| 15 | 537582115 | CASE<br>*White terminal plastic case* | 2 | - |
| 16 | 537582116 | CASE<br>*Blue plastic case* | 2 | - |
| 17 | 537582117 | CASE<br>*Black terminal plastic case* | 2 | - |
| 18 | 537582118 | TERMINAL<br>*Terminal* | 6 | - |
| 19 | 537582119 | PIN<br>*Rolled elastic pin 2.5x11* | 4 | - |
| 20 | 538969801 | CONDUCTOR<br>*Black Conductor* | 2 | - |
| 21 | 537582120 | CONDUCTOR<br>*Sampling signal conductor* | 1 | - |
| 22 | 537582121 | BASE<br>*Base* | 1 | - |
| 23 | 537582122 | CAP<br>*Pop up cap* | 4 | - |

| Ref. | Article N. | Description | Qty | Kit |
|---|---|---|---|---|
| 24 | 537582123 | CASE<br>*Battery compartment* | 1 | - |
| 25 | 537582124 | SHIELD<br>*Wind shield* | 1 | - |
| 26 | 537582125 | COVER<br>*Left lamp cover* | 1 | - |
| 27 | 537582126 | COVER<br>*Right lamp cover* | 1 | - |
| 28 | 537582127 | HOLDER<br>*Left lamp holder* | 1 | - |
| 29 | 537582128 | HOLDER<br>*Right lamp holder* | 1 | - |
| 30 | 537582129 | PANEL<br>*Left light panel ass'y* | 1 | - |
| 31 | 537582130 | PANEL<br>*Right light panel ass'y* | 1 | - |
| 32 | 537582131 | SPRING<br>*Ejector spring* | 4 | - |
| 33 | 537582133 | SCREW<br>*Hexagon socket pattern pan head tapping screw* | 6 | - |
| 34 | 537582134 | MOTOR<br>*Motor sit* | 1 | - |
| 35 | 537582135 | MOTOR<br>*Brushless motor* | 1 | - |
| 36 | 537582136 | SCREW<br>*Torx slotted pan head screw* | 4 | - |
| 37 | 537582137 | NUT<br>*Hexagon thick nut* | 4 | - |
| 38 | 537582138 | CONDUCTOR<br>*Self propelled /conductor* | 1 | - |
| 39 | 537582139 | PLATE<br>*Crimping plate* | 1 | - |
| 40 | 537582140 | FAN<br>*Fan* | 1 | - |
| 41 | 537582141 | BLADE<br>*Blade* | 1 | - |
| 42 | 538970201 | DRIVE SCREW<br>*Hexagon bolt (grade 10.9)* | 1 | - |
| 43 | 538970301 | SPRING<br>*Spring washer* | 1 | - |
| 44 | 538970401 | RETAINER RING<br>*Blade washer* | 1 | - |
| 45 | 537582144 | BOLT | 3 | - |

| Ref. | Article N. | Description | Qty | Kit |
|---|---|---|---|---|
| | | *Hexagon head bolt M10x20* | | |
| 46 | 537582145 | NUT<br>*Hexagon lock nut* | 3 | - |
| 47 | 538969901 | CIRCUIT BREAKER<br>*Magnetic ring assembly* | 2 | - |
| 1 | 538971001 | BAG FRAME<br>*Grass catcher bag* | 1 | - |
| 2 | 586922701 | MULCHING PLUG<br>*Mulching plug* | 1 | - |
| 3 | 538680501 | CHUTE<br>*Side Discharge Chute* | 1 | - |
| 4 | 586929102 | BAG FRAME<br>*Grass catcher bag bracket* | 1 | - |

## HANDLE

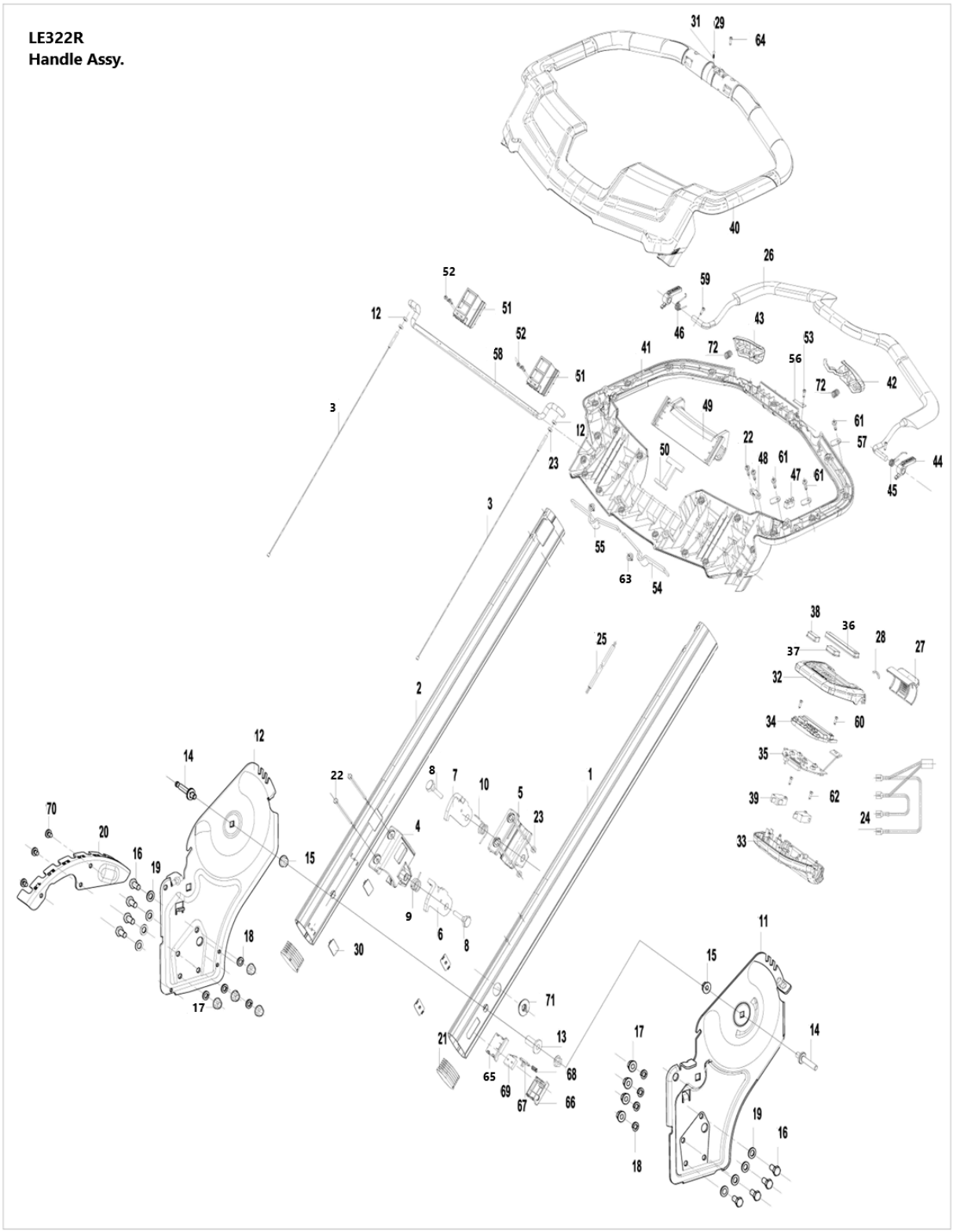


| Ref. | Article N. | Description | Qty | Kit |
|---|---|---|---|---|
| 1 | 537582146 | COVER<br>*Deck Front Cover* | 1 | - |
| 2 | 537582147 | BOARD<br>*Rear Protection board* | 1 | - |
| 3 | 538970601 | DRIVE SCREW<br>*Bolt, Deck Front Cover* | 8 | - |

| Ref. | Article N. | Description | Qty | Kit |
|---|---|---|---|---|
| 4 | 587438201 | SCREW<br>*Grass Plate Fixing Bolt* | 2 | - |
| 5 | 586698801 | GUARD<br>*Grass Pressing Plate* | 1 | - |
| 6 | 537582148 | COVER<br>*Motor protection cover* | 1 | - |
| 7 | 538970801 | DRIVE SCREW<br>*Bolt* | 2 | - |
| 8 | 581726101 | BOLT<br>*Bolt* | 1 | - |
| 9 | 537582149 | COVER<br>*Mounting bracket of self-propelled device protective cover* | 1 | - |
| 10 | 537582150 | COVER<br>*Grass comb cover* | 1 | - |
| 11 | 537582151 | DECK<br>*Deck* | 1 | - |
| 12 | 538681301 | SPRING<br>*Rear Flap Torsion spring (Right)* | 1 | - |
| 13 | 538970901 | FLAP<br>*Rear Flap* | 1 | - |
| 14 | 538681401 | SPRING<br>*Rear Flap Torsion spring (Left)* | 1 | - |
| 15 | 532413284 | NUT<br>*Torsion Spring Pin Nut* | 2 | - |
| 16 | 587198901 | BOLT<br>*Torsion Spring Pin* | 2 | - |
| 17 | 537582153 | LINING<br>*Deck liner 1* | 1 | - |
| 18 | 537582154 | LINING<br>*Deck liner 2* | 1 | - |
| 19 | 537582155 | BOLT<br>*Cross countersunk head tapping bolt st4x14* | 10 | - |
| 20 | 537582156 | HARNESS<br>*Self propelled device harness sheath* | 1 | - |
| 21 | 537582108 | SCREW<br>*Torx slotted pan head tapping screw* | 33 | - |
| 1 | 537582158 | FRONT AXLE ASSY<br>*Front Wheel Axle Ass'y* | 1 | - |
| 2 | 537582159 | BOLT<br>*Hexagon flange bolt M6x8* | 4 | - |
| 3 | 532197480 | O-RING<br>*O shape ring* | 2 | - |
| 4 | 532067725 | WASHER | 2 | - |

| Ref. | Article N. | Description | Qty | Kit |
|---|---|---|---|---|
| | | *Washer* | | |
| 5 | 537582160 | WHEEL<br>*Wheel Ass'y 8"* | 2 | - |
| 6 | 532409148 | NUT<br>*Nut* | 4 | - |
| 7 | 546598001 | REAR AXLE<br>*Liffting mechanism welding assembly* | 1 | - |
| 8 | 538681101 | CIRCLIP<br>*Clip* | 4 | - |
| 9 | 537582163 | TRANSMISSION<br>*Self-propelled device* | 1 | - |
| 10 | 537582164 | PLATE<br>*Self-propelled device fixing plate* | 1 | - |
| 11 | 537582165 | SCREW<br>*Cross recessed pan head screw* | 1 | - |
| 12 | 538681201 | DRIVE SCREW<br>*M5 Nut* | 3 | - |
| 13 | 537582167 | BOLT<br>*Cross tapping bolt ST4 8x12* | 2 | - |
| 14 | 537582168 | BEARING<br>*Low speed bearing* | 6 | - |
| 15 | 537582169 | WHEEL<br>*Wheel axle sleeve (11" wheel)* | 2 | - |
| 16 | 501067001 | WHEEL ASSY<br>*Wheel Assy 11"* | 2 | - |
| 17 | 537582170 | GEAR<br>*Driven gear* | 2 | - |
| 18 | 537582171 | BOLT<br>*Wheel gear bolt* | 6 | - |
| 19 | 587251701 | DUST COVER<br>*Wheel cap 11"* | 2 | - |
| 20 | 532404845 | PAWL<br>*Gear Pin* | 2 | - |
| 21 | 587232401 | PINION<br>*Driving Gear 11* | 2 | - |
| 22 | 581127601 | SCREW<br>*Lifting mechanism fixing bolt* | 4 | - |
| 23 | 537582172 | PLATE<br>*Lifting mechanism fixing plate* | 2 | - |
| 24 | 537582173 | SLEEVE<br>*Lifting mechanism shaft sleeve* | 2 | - |
| 25 | 537582174 | SPRING<br>*Height adjusting tension spring* | 1 | - |

| Ref. | Article N. | Description | Qty | Kit |
|---|---|---|---|---|
| 26 | 537582175 | SPRING<br>*Height adjusting torsion spring* | 1 | - |
| 27 | 537582176 | COVER<br>*Height adjusting handle (Left cover)* | 1 | - |
| 28 | 537582177 | COVER<br>*Height adjusting handle (Right cover)* | 1 | - |
| 29 | 537582178 | PIN<br>*Cotter pin* | 1 | - |
| 30 | 537582179 | SCREW<br>*Cross recessed pan head tapping screw ST4 * 10* | 2 | - |
| 31 | 537582180 | ROD<br>*Connecting rod* | 1 | - |
| 32 | 537582181 | NUT<br>*M6 lock nut(blacking)* | 2 | - |
| 33 | 537582182 | CIRCLIP<br>*Lifting mechanism open circlip* | 2 | - |
| 34 | 537582183 | ROD<br>*Feight adjusting rod* | 1 | - |
| 1 | 537582184 | BAR<br>*LT ALU EXTRUSION HANDLE BAR* | 1 | - |
| 2 | 537582185 | BAR<br>*RT ALU EXTRUSION HANDLE BAR* | 1 | - |
| 3 | 537582186 | CABLE<br>*FOLDING MECHANISM CABLE* | 2 | - |
| 4 | 537582187 | PLATE<br>*FOLDING STOP PLATE (RIGHT)* | 1 | - |
| 5 | 537582188 | PLATE<br>*FOLDING STOP PLATE (LEFT)* | 1 | - |
| 6 | 537582189 | PAWL<br>*LIMIT PAWL (RIGHT)* | 1 | - |
| 7 | 537582190 | PAWL<br>*LIMIT PAWL (LEFT)* | 2 | - |
| 8 | 537582191 | BOLT<br>*FOLDING STOP PLATE BOLT* | 1 | - |
| 9 | 537582192 | SPRING<br>*LIMIT PAWL TORSION SPRING RT* | 1 | - |
| 10 | 537582193 | SPRING<br>*LIMIT PAWL TORSION SPRING LT* | 1 | - |
| 11 | 537582194 | BRACKET<br>*EXTRUSION SUPPORT BRACKET LT* | 1 | - |
| 12 | 537582195 | BRACKET<br>*EXTRUSION SUPPORT BRACKET RT* | 2 | - |
| 13 | 537582196 | SLEEVE | 2 | - |

| Ref. | Article N. | Description | Qty | Kit |
|---|---|---|---|---|
| | | *PUSH ROD LIMIT SLEEVE* | | |
| 14 | 538971101 | DRIVE SCREW<br>*DRIVE SCREW LOWER EXTRUSION BO* | 4 | - |
| 15 | 587599901 | NUT<br>*NUT.FLANGE.SERRAT.3125-18.5625* | 8 | - |
| 16 | 537582197 | FLANGE<br>*HEXAGON FLANGE BOLT M8X16* | 8 | - |
| 17 | 537582198 | NUT<br>*HEXAGON FLANGE NUT (M8)* | 8 | - |
| 18 | 537582199 | WASHER<br>*ELASTIC WASHER 8* | 8 | - |
| 19 | 537582201 | WASHER<br>*FLAT WASHER 8 GB T97.1* | 1 | - |
| 20 | 537582202 | PLATE<br>*GEAR PLATE* | 2 | - |
| 21 | 537582203 | PLUG<br>*EXTRUSION PLUG* | 4 | - |
| 22 | 537582204 | BOLT<br>*HEXAGON HEAD BOLT M5X70* | 2 | - |
| 23 | 537582205 | BOLT<br>*HEXAGON HEAD BOLT M5* | 1 | - |
| 24 | 538971201 | WIRING ASSY<br>*PARALLEL WIRE HARNESS ASSY* | 1 | - |
| 25 | 537582207 | HARNESS<br>*WIRE HARNESS ASSEMBLY* | 1 | - |
| 26 | 537582210 | LEVER<br>*BRAKE LEVER* | 1 | - |
| 27 | 537582211 | BUTTON<br>*SPEED ADJUSTMENT BUTTON* | 1 | - |
| 28 | 537582212 | MAGNET<br>*HALL MAGNET* | 1 | - |
| 29 | 537582213 | STEEL<br>*3 STEEL BALL* | 1 | - |
| 30 | 538971301 | GUSSET<br>*GUSSET WEAR GASKET* | 4 | - |
| 31 | 537582215 | SPRING<br>*STEEL BALL RETURN SPRING* | 1 | - |
| 32 | 537582216 | BOX<br>*UPPER COVER OF SWITCH BOX* | 1 | - |
| 33 | 537582217 | BOX<br>*LOWER COVER OF SWITCH BOX* | 1 | - |
| 34 | 537582218 | PLATE<br>*SWITCH BOX BUTTON GUIDE PLATE* | 1 | - |

| Ref. | Article N. | Description | Qty | Kit |
|---|---|---|---|---|
| 35 | 537582219 | BOX<br>*SWITCH BOX PCB* | 1 | - |
| 36 | 537582220 | BUTTON<br>*TRIGGER BUTTON (BUTTON 1)* | 1 | - |
| 37 | 537582221 | BUTTON<br>*POWER ON BUTTON (BUTTON 2)* | 1 | - |
| 38 | 537582222 | BUTTON<br>*FUNCTION BUTTON (BUTTON 3)* | 1 | - |
| 39 | 537582223 | SWITCH<br>*SELFPROPELL SWITCH MICROSWITCH* | 2 | - |
| 40 | 537582224 | COVER<br>*HANDLE UPPER COVER* | 1 | - |
| 41 | 537582225 | COVER<br>*HANDLE LOWER COVER* | 1 | - |
| 42 | 537582226 | BUTTON<br>*ACCELERATION BUTTON (LEFT)* | 1 | - |
| 43 | 537582227 | BUTTON<br>*ACCELERATION BUTTON (RIGHT)* | 1 | - |
| 44 | 537582228 | KNOB<br>*BRAKE LEVER SHUT OFF KNOB* | 2 | - |
| 45 | 537582229 | SPRING<br>*BRAKE LEVER RETURN SPRING LT* | 1 | - |
| 46 | 537582230 | SPRING<br>*BRAKE LEVER RETURN SPRING RT* | 1 | - |
| 47 | 537582231 | SWITCH<br>*BRAKE LEVER SWITCH* | 1 | - |
| 48 | 537582232 | PLATE<br>*CRIMPING PLATE* | 1 | - |
| 49 | 537582233 | BUTTON<br>*FOLDING BUTTON* | 1 | - |
| 50 | 537582234 | ROD<br>*FOLDING BUTTON PUSH ROD* | 1 | - |
| 51 | 537582235 | STOPPER<br>*CABLE STOPPER* | 2 | - |
| 52 | 538971401 | DRIVE SCREW<br>*DRIVE SCREW M4X12* | 4 | - |
| 53 | 538680801 | DRIVE SCREW<br>*SCREW SELF TAPPING* | 1 | - |
| 54 | 537582238 | ROD<br>*CABLE CARRYING ROD 2* | 1 | - |
| 55 | 537582239 | ROD<br>*CABLE CARRYING ROD 1* | 1 | - |
| 56 | 537582240 | PLATE | 1 | - |

| Ref. | Article N. | Description | Qty | Kit |
|---|---|---|---|---|
| | | *HNDL WIRE HARNESS PRESS PLATE1* | | |
| 57 | 537582241 | PLATE<br>*HNDL WIRE HARNESS PRESS PLATE2* | 3 | - |
| 58 | 537582242 | ROD<br>*STAY ROD* | 1 | - |
| 59 | 538971501 | DRIVE SCREW<br>*DRIVE SCREW BOLT M4X16* | 2 | - |
| 60 | 538971601 | DRIVE SCREW<br>*DRIVE SCREW ST3X10* | 2 | - |
| 61 | 538970501 | DRIVE SCREW<br>*DRIVE SCREW TORX SCREW* | 3 | - |
| 62 | 537582247 | SCREW<br>*SCREW PANHEAD ST4X10 W/WASHER* | 2 | - |
| 63 | 538971901 | WIRE<br>*WIRE PLUG* | 2 | - |
| 64 | 538971801 | DRIVE SCREW<br>*DRIVE SCREW BOLT ST3X8* | 1 | - |
| 65 | 537582249 | COVER<br>*FOLDING SWITCH UPPER COVER* | 1 | - |
| 66 | 537582250 | COVER<br>*FOLDING SWITCH LOWER COVER* | 1 | - |
| 67 | 537582251 | SWITCH<br>*FOLDING SWITCH SLIDER* | 1 | - |
| 68 | 537582252 | SPRING<br>*SPRING SWITCH SLIDER 5X0.7X13* | 1 | - |
| 69 | 537582253 | SWITCH<br>*FOLDED SWITCH* | 1 | - |
| 70 | 537582254 | SCREW<br>*SCREW PANHEAD M5X10* | 3 | - |
| 71 | 538971901 | WIRE<br>*WIRE PLUG* | 1 | - |
| 1 | 537582101 | COVER<br>*Upper Cover* | 1 | - |
| 2 | 537582102 | FLAP<br>*Flap* | 1 | - |
| 3 | 537582103 | COVER<br>*Left side cover* | 1 | - |
| 4 | 537582104 | COVER<br>*Right side cover* | 1 | - |
| 5 | 537582105 | SPRING<br>*Left torsion spring* | 1 | - |
| 6 | 537582106 | SPRING<br>*Right torsion spring* | 1 | - |

| Ref. | Article N. | Description | Qty | Kit |
|---|---|---|---|---|
| 7 | 537582107 | FILTER<br>*Filter sponge* | 1 | - |
| 8 | 537582108 | SCREW<br>*Torx slotted pan head tapping screw* | 36 | - |
| 9 | 537582109 | SCREW<br>*Hexagon socket Torx pan head tapping half thread screw* | 2 | - |
| 10 | 537582110 | CONTROL<br>*USE BEFORE SERIAL # 20231500001 **REF #10 & REF #11 MUST BE ORDERED TOGETHER* | 1 | - |
| 10 | 548309601 | SERVICE KIT<br>*USE AFTER SERIAL # 20231500001 **REF #10 & REF #11 MUST BE ORDERED TOGETHER* | 1 | - |
| 11 | 537582111 | CONTROL<br>*USE BEFORE SERIAL # 20231500001 **REF #10 & REF #11 MUST BE ORDERED TOGETHER* | 1 | - |
| 11 | 548309701 | SERVICE KIT<br>*USE AFTER SERIAL # 20231500001 **REF #10 & REF #11 MUST BE ORDERED TOGETHER* | 1 | - |
| 12 | 537582112 | CONTROL<br>*Self propelled controller* | 1 | - |
| 13 | 537582113 | BLOCK<br>*Terminal block* | 2 | - |
| 14 | 537582114 | CASE<br>*Red terminal plastic case* | 2 | - |
| 15 | 537582115 | CASE<br>*White terminal plastic case* | 2 | - |
| 16 | 537582116 | CASE<br>*Blue plastic case* | 2 | - |
| 17 | 537582117 | CASE<br>*Black terminal plastic case* | 2 | - |
| 18 | 537582118 | TERMINAL<br>*Terminal* | 6 | - |
| 19 | 537582119 | PIN<br>*Rolled elastic pin 2.5x11* | 4 | - |
| 20 | 538969801 | CONDUCTOR<br>*Black Conductor* | 2 | - |
| 21 | 537582120 | CONDUCTOR<br>*Sampling signal conductor* | 1 | - |
| 22 | 537582121 | BASE<br>*Base* | 1 | - |
| 23 | 537582122 | CAP<br>*Pop up cap* | 4 | - |

| Ref. | Article N. | Description | Qty | Kit |
|---|---|---|---|---|
| 24 | 537582123 | CASE<br>*Battery compartment* | 1 | - |
| 25 | 537582124 | SHIELD<br>*Wind shield* | 1 | - |
| 26 | 537582125 | COVER<br>*Left lamp cover* | 1 | - |
| 27 | 537582126 | COVER<br>*Right lamp cover* | 1 | - |
| 28 | 537582127 | HOLDER<br>*Left lamp holder* | 1 | - |
| 29 | 537582128 | HOLDER<br>*Right lamp holder* | 1 | - |
| 30 | 537582129 | PANEL<br>*Left light panel ass'y* | 1 | - |
| 31 | 537582130 | PANEL<br>*Right light panel ass'y* | 1 | - |
| 32 | 537582131 | SPRING<br>*Ejector spring* | 4 | - |
| 33 | 537582133 | SCREW<br>*Hexagon socket pattern pan head tapping screw* | 6 | - |
| 34 | 537582134 | MOTOR<br>*Motor sit* | 1 | - |
| 35 | 537582135 | MOTOR<br>*Brushless motor* | 1 | - |
| 36 | 537582136 | SCREW<br>*Torx slotted pan head screw* | 4 | - |
| 37 | 537582137 | NUT<br>*Hexagon thick nut* | 4 | - |
| 38 | 537582138 | CONDUCTOR<br>*Self propelled /conductor* | 1 | - |
| 39 | 537582139 | PLATE<br>*Crimping plate* | 1 | - |
| 40 | 537582140 | FAN<br>*Fan* | 1 | - |
| 41 | 537582141 | BLADE<br>*Blade* | 1 | - |
| 42 | 538970201 | DRIVE SCREW<br>*Hexagon bolt (grade 10.9)* | 1 | - |
| 43 | 538970301 | SPRING<br>*Spring washer* | 1 | - |
| 44 | 538970401 | RETAINER RING<br>*Blade washer* | 1 | - |
| 45 | 537582144 | BOLT | 3 | - |

| Ref. | Article N. | Description | Qty | Kit |
|---|---|---|---|---|
| | | *Hexagon head bolt M10x20* | | |
| 46 | 537582145 | NUT<br>*Hexagon lock nut* | 3 | - |
| 47 | 538969901 | CIRCUIT BREAKER<br>*Magnetic ring assembly* | 2 | - |
| 1 | 538971001 | BAG FRAME<br>*Grass catcher bag* | 1 | - |
| 2 | 586922701 | MULCHING PLUG<br>*Mulching plug* | 1 | - |
| 3 | 538680501 | CHUTE<br>*Side Discharge Chute* | 1 | - |
| 4 | 586929102 | BAG FRAME<br>*Grass catcher bag bracket* | 1 | - |

## POWER HEAD

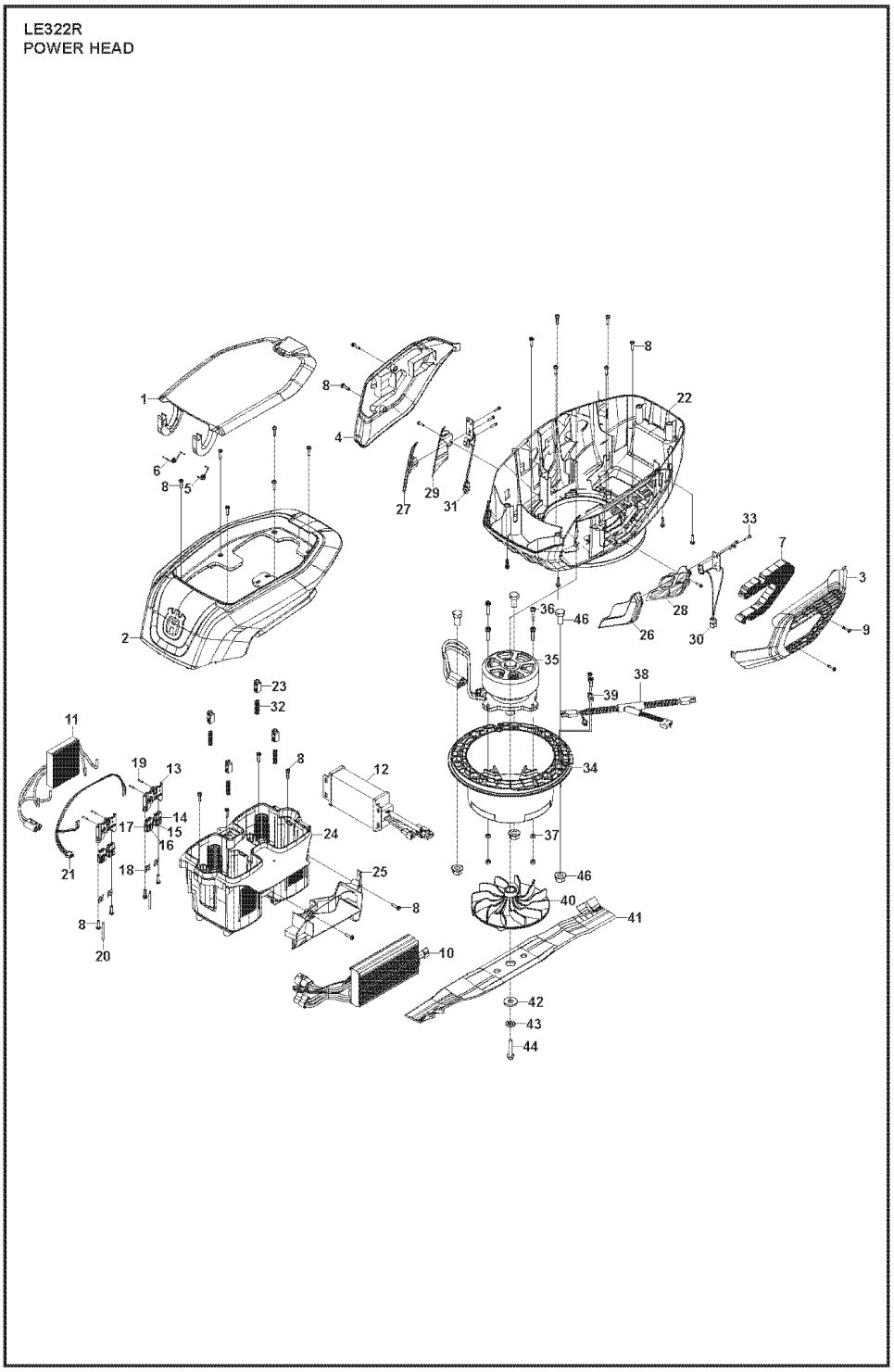


| Ref. | Article N. | Description | Qty | Kit |
|---|---|---|---|---|
| 1 | 537582146 | COVER<br>*Deck Front Cover* | 1 | - |
| 2 | 537582147 | BOARD<br>*Rear Protection board* | 1 | - |
| 3 | 538970601 | DRIVE SCREW<br>*Bolt, Deck Front Cover* | 8 | - |

| Ref. | Article N. | Description | Qty | Kit |
|---|---|---|---|---|
| 4 | 587438201 | SCREW<br>*Grass Plate Fixing Bolt* | 2 | - |
| 5 | 586698801 | GUARD<br>*Grass Pressing Plate* | 1 | - |
| 6 | 537582148 | COVER<br>*Motor protection cover* | 1 | - |
| 7 | 538970801 | DRIVE SCREW<br>*Bolt* | 2 | - |
| 8 | 581726101 | BOLT<br>*Bolt* | 1 | - |
| 9 | 537582149 | COVER<br>*Mounting bracket of self-propelled device protective cover* | 1 | - |
| 10 | 537582150 | COVER<br>*Grass comb cover* | 1 | - |
| 11 | 537582151 | DECK<br>*Deck* | 1 | - |
| 12 | 538681301 | SPRING<br>*Rear Flap Torsion spring (Right)* | 1 | - |
| 13 | 538970901 | FLAP<br>*Rear Flap* | 1 | - |
| 14 | 538681401 | SPRING<br>*Rear Flap Torsion spring (Left)* | 1 | - |
| 15 | 532413284 | NUT<br>*Torsion Spring Pin Nut* | 2 | - |
| 16 | 587198901 | BOLT<br>*Torsion Spring Pin* | 2 | - |
| 17 | 537582153 | LINING<br>*Deck liner 1* | 1 | - |
| 18 | 537582154 | LINING<br>*Deck liner 2* | 1 | - |
| 19 | 537582155 | BOLT<br>*Cross countersunk head tapping bolt st4x14* | 10 | - |
| 20 | 537582156 | HARNESS<br>*Self propelled device harness sheath* | 1 | - |
| 21 | 537582108 | SCREW<br>*Torx slotted pan head tapping screw* | 33 | - |
| 1 | 537582158 | FRONT AXLE ASSY<br>*Front Wheel Axle Ass'y* | 1 | - |
| 2 | 537582159 | BOLT<br>*Hexagon flange bolt M6x8* | 4 | - |
| 3 | 532197480 | O-RING<br>*O shape ring* | 2 | - |
| 4 | 532067725 | WASHER | 2 | - |

| Ref. | Article N. | Description | Qty | Kit |
|---|---|---|---|---|
| | | *Washer* | | |
| 5 | 537582160 | WHEEL<br>*Wheel Ass'y 8"* | 2 | - |
| 6 | 532409148 | NUT<br>*Nut* | 4 | - |
| 7 | 546598001 | REAR AXLE<br>*Liffting mechanism welding assembly* | 1 | - |
| 8 | 538681101 | CIRCLIP<br>*Clip* | 4 | - |
| 9 | 537582163 | TRANSMISSION<br>*Self-propelled device* | 1 | - |
| 10 | 537582164 | PLATE<br>*Self-propelled device fixing plate* | 1 | - |
| 11 | 537582165 | SCREW<br>*Cross recessed pan head screw* | 1 | - |
| 12 | 538681201 | DRIVE SCREW<br>*M5 Nut* | 3 | - |
| 13 | 537582167 | BOLT<br>*Cross tapping bolt ST4 8x12* | 2 | - |
| 14 | 537582168 | BEARING<br>*Low speed bearing* | 6 | - |
| 15 | 537582169 | WHEEL<br>*Wheel axle sleeve (11" wheel)* | 2 | - |
| 16 | 501067001 | WHEEL ASSY<br>*Wheel Assy 11"* | 2 | - |
| 17 | 537582170 | GEAR<br>*Driven gear* | 2 | - |
| 18 | 537582171 | BOLT<br>*Wheel gear bolt* | 6 | - |
| 19 | 587251701 | DUST COVER<br>*Wheel cap 11"* | 2 | - |
| 20 | 532404845 | PAWL<br>*Gear Pin* | 2 | - |
| 21 | 587232401 | PINION<br>*Driving Gear 11* | 2 | - |
| 22 | 581127601 | SCREW<br>*Lifting mechanism fixing bolt* | 4 | - |
| 23 | 537582172 | PLATE<br>*Lifting mechanism fixing plate* | 2 | - |
| 24 | 537582173 | SLEEVE<br>*Lifting mechanism shaft sleeve* | 2 | - |
| 25 | 537582174 | SPRING<br>*Height adjusting tension spring* | 1 | - |

| Ref. | Article N. | Description | Qty | Kit |
|---|---|---|---|---|
| 26 | 537582175 | SPRING<br>*Height adjusting torsion spring* | 1 | - |
| 27 | 537582176 | COVER<br>*Height adjusting handle (Left cover)* | 1 | - |
| 28 | 537582177 | COVER<br>*Height adjusting handle (Right cover)* | 1 | - |
| 29 | 537582178 | PIN<br>*Cotter pin* | 1 | - |
| 30 | 537582179 | SCREW<br>*Cross recessed pan head tapping screw ST4 * 10* | 2 | - |
| 31 | 537582180 | ROD<br>*Connecting rod* | 1 | - |
| 32 | 537582181 | NUT<br>*M6 lock nut(blacking)* | 2 | - |
| 33 | 537582182 | CIRCLIP<br>*Lifting mechanism open circlip* | 2 | - |
| 34 | 537582183 | ROD<br>*Feight adjusting rod* | 1 | - |
| 1 | 537582184 | BAR<br>*LT ALU EXTRUSION HANDLE BAR* | 1 | - |
| 2 | 537582185 | BAR<br>*RT ALU EXTRUSION HANDLE BAR* | 1 | - |
| 3 | 537582186 | CABLE<br>*FOLDING MECHANISM CABLE* | 2 | - |
| 4 | 537582187 | PLATE<br>*FOLDING STOP PLATE (RIGHT)* | 1 | - |
| 5 | 537582188 | PLATE<br>*FOLDING STOP PLATE (LEFT)* | 1 | - |
| 6 | 537582189 | PAWL<br>*LIMIT PAWL (RIGHT)* | 1 | - |
| 7 | 537582190 | PAWL<br>*LIMIT PAWL (LEFT)* | 2 | - |
| 8 | 537582191 | BOLT<br>*FOLDING STOP PLATE BOLT* | 1 | - |
| 9 | 537582192 | SPRING<br>*LIMIT PAWL TORSION SPRING RT* | 1 | - |
| 10 | 537582193 | SPRING<br>*LIMIT PAWL TORSION SPRING LT* | 1 | - |
| 11 | 537582194 | BRACKET<br>*EXTRUSION SUPPORT BRACKET LT* | 1 | - |
| 12 | 537582195 | BRACKET<br>*EXTRUSION SUPPORT BRACKET RT* | 2 | - |
| 13 | 537582196 | SLEEVE | 2 | - |

| Ref. | Article N. | Description | Qty | Kit |
|---|---|---|---|---|
| | | *PUSH ROD LIMIT SLEEVE* | | |
| 14 | 538971101 | DRIVE SCREW<br>*DRIVE SCREW LOWER EXTRUSION BO* | 4 | - |
| 15 | 587599901 | NUT<br>*NUT.FLANGE.SERRAT.3125-18.5625* | 8 | - |
| 16 | 537582197 | FLANGE<br>*HEXAGON FLANGE BOLT M8X16* | 8 | - |
| 17 | 537582198 | NUT<br>*HEXAGON FLANGE NUT (M8)* | 8 | - |
| 18 | 537582199 | WASHER<br>*ELASTIC WASHER 8* | 8 | - |
| 19 | 537582201 | WASHER<br>*FLAT WASHER 8 GB T97.1* | 1 | - |
| 20 | 537582202 | PLATE<br>*GEAR PLATE* | 2 | - |
| 21 | 537582203 | PLUG<br>*EXTRUSION PLUG* | 4 | - |
| 22 | 537582204 | BOLT<br>*HEXAGON HEAD BOLT M5X70* | 2 | - |
| 23 | 537582205 | BOLT<br>*HEXAGON HEAD BOLT M5* | 1 | - |
| 24 | 538971201 | WIRING ASSY<br>*PARALLEL WIRE HARNESS ASSY* | 1 | - |
| 25 | 537582207 | HARNESS<br>*WIRE HARNESS ASSEMBLY* | 1 | - |
| 26 | 537582210 | LEVER<br>*BRAKE LEVER* | 1 | - |
| 27 | 537582211 | BUTTON<br>*SPEED ADJUSTMENT BUTTON* | 1 | - |
| 28 | 537582212 | MAGNET<br>*HALL MAGNET* | 1 | - |
| 29 | 537582213 | STEEL<br>*3 STEEL BALL* | 1 | - |
| 30 | 538971301 | GUSSET<br>*GUSSET WEAR GASKET* | 4 | - |
| 31 | 537582215 | SPRING<br>*STEEL BALL RETURN SPRING* | 1 | - |
| 32 | 537582216 | BOX<br>*UPPER COVER OF SWITCH BOX* | 1 | - |
| 33 | 537582217 | BOX<br>*LOWER COVER OF SWITCH BOX* | 1 | - |
| 34 | 537582218 | PLATE<br>*SWITCH BOX BUTTON GUIDE PLATE* | 1 | - |

| Ref. | Article N. | Description | Qty | Kit |
|---|---|---|---|---|
| 35 | 537582219 | BOX<br>*SWITCH BOX PCB* | 1 | - |
| 36 | 537582220 | BUTTON<br>*TRIGGER BUTTON (BUTTON 1)* | 1 | - |
| 37 | 537582221 | BUTTON<br>*POWER ON BUTTON (BUTTON 2)* | 1 | - |
| 38 | 537582222 | BUTTON<br>*FUNCTION BUTTON (BUTTON 3)* | 1 | - |
| 39 | 537582223 | SWITCH<br>*SELFPROPELL SWITCH MICROSWITCH* | 2 | - |
| 40 | 537582224 | COVER<br>*HANDLE UPPER COVER* | 1 | - |
| 41 | 537582225 | COVER<br>*HANDLE LOWER COVER* | 1 | - |
| 42 | 537582226 | BUTTON<br>*ACCELERATION BUTTON (LEFT)* | 1 | - |
| 43 | 537582227 | BUTTON<br>*ACCELERATION BUTTON (RIGHT)* | 1 | - |
| 44 | 537582228 | KNOB<br>*BRAKE LEVER SHUT OFF KNOB* | 2 | - |
| 45 | 537582229 | SPRING<br>*BRAKE LEVER RETURN SPRING LT* | 1 | - |
| 46 | 537582230 | SPRING<br>*BRAKE LEVER RETURN SPRING RT* | 1 | - |
| 47 | 537582231 | SWITCH<br>*BRAKE LEVER SWITCH* | 1 | - |
| 48 | 537582232 | PLATE<br>*CRIMPING PLATE* | 1 | - |
| 49 | 537582233 | BUTTON<br>*FOLDING BUTTON* | 1 | - |
| 50 | 537582234 | ROD<br>*FOLDING BUTTON PUSH ROD* | 1 | - |
| 51 | 537582235 | STOPPER<br>*CABLE STOPPER* | 2 | - |
| 52 | 538971401 | DRIVE SCREW<br>*DRIVE SCREW M4X12* | 4 | - |
| 53 | 538680801 | DRIVE SCREW<br>*SCREW SELF TAPPING* | 1 | - |
| 54 | 537582238 | ROD<br>*CABLE CARRYING ROD 2* | 1 | - |
| 55 | 537582239 | ROD<br>*CABLE CARRYING ROD 1* | 1 | - |
| 56 | 537582240 | PLATE | 1 | - |

| Ref. | Article N. | Description | Qty | Kit |
|---|---|---|---|---|
| | | *HNDL WIRE HARNESS PRESS PLATE1* | | |
| 57 | 537582241 | PLATE<br>*HNDL WIRE HARNESS PRESS PLATE2* | 3 | - |
| 58 | 537582242 | ROD<br>*STAY ROD* | 1 | - |
| 59 | 538971501 | DRIVE SCREW<br>*DRIVE SCREW BOLT M4X16* | 2 | - |
| 60 | 538971601 | DRIVE SCREW<br>*DRIVE SCREW ST3X10* | 2 | - |
| 61 | 538970501 | DRIVE SCREW<br>*DRIVE SCREW TORX SCREW* | 3 | - |
| 62 | 537582247 | SCREW<br>*SCREW PANHEAD ST4X10 W/WASHER* | 2 | - |
| 63 | 538971901 | WIRE<br>*WIRE PLUG* | 2 | - |
| 64 | 538971801 | DRIVE SCREW<br>*DRIVE SCREW BOLT ST3X8* | 1 | - |
| 65 | 537582249 | COVER<br>*FOLDING SWITCH UPPER COVER* | 1 | - |
| 66 | 537582250 | COVER<br>*FOLDING SWITCH LOWER COVER* | 1 | - |
| 67 | 537582251 | SWITCH<br>*FOLDING SWITCH SLIDER* | 1 | - |
| 68 | 537582252 | SPRING<br>*SPRING SWITCH SLIDER 5X0.7X13* | 1 | - |
| 69 | 537582253 | SWITCH<br>*FOLDED SWITCH* | 1 | - |
| 70 | 537582254 | SCREW<br>*SCREW PANHEAD M5X10* | 3 | - |
| 71 | 538971901 | WIRE<br>*WIRE PLUG* | 1 | - |
| 1 | 537582101 | COVER<br>*Upper Cover* | 1 | - |
| 2 | 537582102 | FLAP<br>*Flap* | 1 | - |
| 3 | 537582103 | COVER<br>*Left side cover* | 1 | - |
| 4 | 537582104 | COVER<br>*Right side cover* | 1 | - |
| 5 | 537582105 | SPRING<br>*Left torsion spring* | 1 | - |
| 6 | 537582106 | SPRING<br>*Right torsion spring* | 1 | - |

| Ref. | Article N. | Description | Qty | Kit |
|---|---|---|---|---|
| 7 | 537582107 | FILTER<br>*Filter sponge* | 1 | - |
| 8 | 537582108 | SCREW<br>*Torx slotted pan head tapping screw* | 36 | - |
| 9 | 537582109 | SCREW<br>*Hexagon socket Torx pan head tapping half thread screw* | 2 | - |
| 10 | 537582110 | CONTROL<br>*USE BEFORE SERIAL # 20231500001 **REF #10 & REF #11 MUST BE ORDERED TOGETHER* | 1 | - |
| 10 | 548309601 | SERVICE KIT<br>*USE AFTER SERIAL # 20231500001 **REF #10 & REF #11 MUST BE ORDERED TOGETHER* | 1 | - |
| 11 | 537582111 | CONTROL<br>*USE BEFORE SERIAL # 20231500001 **REF #10 & REF #11 MUST BE ORDERED TOGETHER* | 1 | - |
| 11 | 548309701 | SERVICE KIT<br>*USE AFTER SERIAL # 20231500001 **REF #10 & REF #11 MUST BE ORDERED TOGETHER* | 1 | - |
| 12 | 537582112 | CONTROL<br>*Self propelled controller* | 1 | - |
| 13 | 537582113 | BLOCK<br>*Terminal block* | 2 | - |
| 14 | 537582114 | CASE<br>*Red terminal plastic case* | 2 | - |
| 15 | 537582115 | CASE<br>*White terminal plastic case* | 2 | - |
| 16 | 537582116 | CASE<br>*Blue plastic case* | 2 | - |
| 17 | 537582117 | CASE<br>*Black terminal plastic case* | 2 | - |
| 18 | 537582118 | TERMINAL<br>*Terminal* | 6 | - |
| 19 | 537582119 | PIN<br>*Rolled elastic pin 2.5x11* | 4 | - |
| 20 | 538969801 | CONDUCTOR<br>*Black Conductor* | 2 | - |
| 21 | 537582120 | CONDUCTOR<br>*Sampling signal conductor* | 1 | - |
| 22 | 537582121 | BASE<br>*Base* | 1 | - |
| 23 | 537582122 | CAP<br>*Pop up cap* | 4 | - |

| Ref. | Article N. | Description | Qty | Kit |
|---|---|---|---|---|
| 24 | 537582123 | CASE<br>*Battery compartment* | 1 | - |
| 25 | 537582124 | SHIELD<br>*Wind shield* | 1 | - |
| 26 | 537582125 | COVER<br>*Left lamp cover* | 1 | - |
| 27 | 537582126 | COVER<br>*Right lamp cover* | 1 | - |
| 28 | 537582127 | HOLDER<br>*Left lamp holder* | 1 | - |
| 29 | 537582128 | HOLDER<br>*Right lamp holder* | 1 | - |
| 30 | 537582129 | PANEL<br>*Left light panel ass'y* | 1 | - |
| 31 | 537582130 | PANEL<br>*Right light panel ass'y* | 1 | - |
| 32 | 537582131 | SPRING<br>*Ejector spring* | 4 | - |
| 33 | 537582133 | SCREW<br>*Hexagon socket pattern pan head tapping screw* | 6 | - |
| 34 | 537582134 | MOTOR<br>*Motor sit* | 1 | - |
| 35 | 537582135 | MOTOR<br>*Brushless motor* | 1 | - |
| 36 | 537582136 | SCREW<br>*Torx slotted pan head screw* | 4 | - |
| 37 | 537582137 | NUT<br>*Hexagon thick nut* | 4 | - |
| 38 | 537582138 | CONDUCTOR<br>*Self propelled /conductor* | 1 | - |
| 39 | 537582139 | PLATE<br>*Crimping plate* | 1 | - |
| 40 | 537582140 | FAN<br>*Fan* | 1 | - |
| 41 | 537582141 | BLADE<br>*Blade* | 1 | - |
| 42 | 538970201 | DRIVE SCREW<br>*Hexagon bolt (grade 10.9)* | 1 | - |
| 43 | 538970301 | SPRING<br>*Spring washer* | 1 | - |
| 44 | 538970401 | RETAINER RING<br>*Blade washer* | 1 | - |
| 45 | 537582144 | BOLT | 3 | - |

| Ref. | Article N. | Description | Qty | Kit |
|---|---|---|---|---|
| | | *Hexagon head bolt M10x20* | | |
| 46 | 537582145 | NUT<br>*Hexagon lock nut* | 3 | - |
| 47 | 538969901 | CIRCUIT BREAKER<br>*Magnetic ring assembly* | 2 | - |
| 1 | 538971001 | BAG FRAME<br>*Grass catcher bag* | 1 | - |
| 2 | 586922701 | MULCHING PLUG<br>*Mulching plug* | 1 | - |
| 3 | 538680501 | CHUTE<br>*Side Discharge Chute* | 1 | - |
| 4 | 586929102 | BAG FRAME<br>*Grass catcher bag bracket* | 1 | - |

## BAGGER

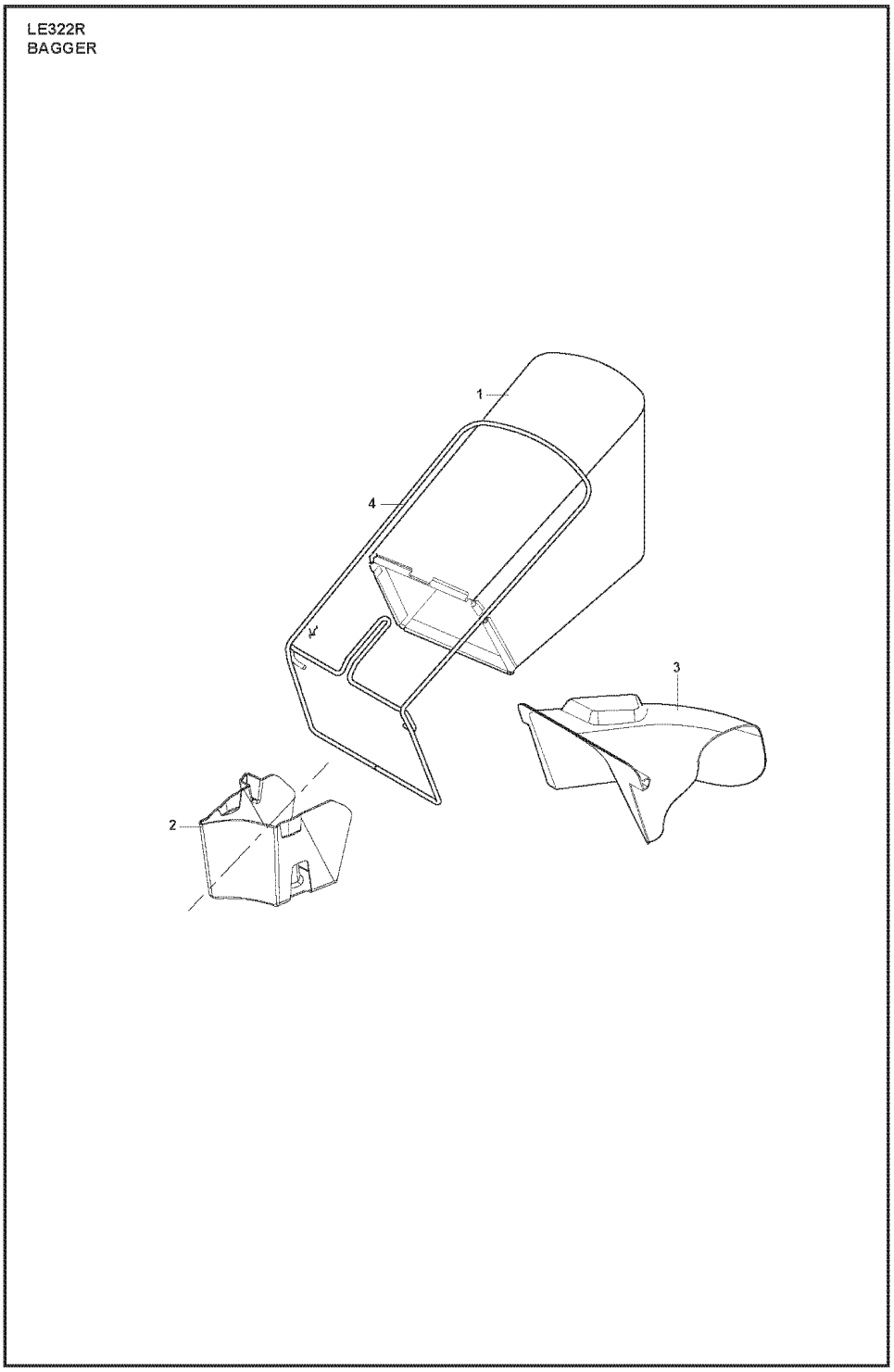


| Ref. | Article N. | Description | Qty | Kit |
|---|---|---|---|---|
| 1 | 537582146 | COVER<br>*Deck Front Cover* | 1 | - |
| 2 | 537582147 | BOARD<br>*Rear Protection board* | 1 | - |
| 3 | 538970601 | DRIVE SCREW<br>*Bolt, Deck Front Cover* | 8 | - |

| Ref. | Article N. | Description | Qty | Kit |
|---|---|---|---|---|
| 4 | 587438201 | SCREW<br>*Grass Plate Fixing Bolt* | 2 | - |
| 5 | 586698801 | GUARD<br>*Grass Pressing Plate* | 1 | - |
| 6 | 537582148 | COVER<br>*Motor protection cover* | 1 | - |
| 7 | 538970801 | DRIVE SCREW<br>*Bolt* | 2 | - |
| 8 | 581726101 | BOLT<br>*Bolt* | 1 | - |
| 9 | 537582149 | COVER<br>*Mounting bracket of self-propelled device protective cover* | 1 | - |
| 10 | 537582150 | COVER<br>*Grass comb cover* | 1 | - |
| 11 | 537582151 | DECK<br>*Deck* | 1 | - |
| 12 | 538681301 | SPRING<br>*Rear Flap Torsion spring (Right)* | 1 | - |
| 13 | 538970901 | FLAP<br>*Rear Flap* | 1 | - |
| 14 | 538681401 | SPRING<br>*Rear Flap Torsion spring (Left)* | 1 | - |
| 15 | 532413284 | NUT<br>*Torsion Spring Pin Nut* | 2 | - |
| 16 | 587198901 | BOLT<br>*Torsion Spring Pin* | 2 | - |
| 17 | 537582153 | LINING<br>*Deck liner 1* | 1 | - |
| 18 | 537582154 | LINING<br>*Deck liner 2* | 1 | - |
| 19 | 537582155 | BOLT<br>*Cross countersunk head tapping bolt st4x14* | 10 | - |
| 20 | 537582156 | HARNESS<br>*Self propelled device harness sheath* | 1 | - |
| 21 | 537582108 | SCREW<br>*Torx slotted pan head tapping screw* | 33 | - |
| 1 | 537582158 | FRONT AXLE ASSY<br>*Front Wheel Axle Ass'y* | 1 | - |
| 2 | 537582159 | BOLT<br>*Hexagon flange bolt M6x8* | 4 | - |
| 3 | 532197480 | O-RING<br>*O shape ring* | 2 | - |
| 4 | 532067725 | WASHER | 2 | - |

| Ref. | Article N. | Description | Qty | Kit |
|---|---|---|---|---|
| | | *Washer* | | |
| 5 | 537582160 | WHEEL<br>*Wheel Ass'y 8"* | 2 | - |
| 6 | 532409148 | NUT<br>*Nut* | 4 | - |
| 7 | 546598001 | REAR AXLE<br>*Liffting mechanism welding assembly* | 1 | - |
| 8 | 538681101 | CIRCLIP<br>*Clip* | 4 | - |
| 9 | 537582163 | TRANSMISSION<br>*Self-propelled device* | 1 | - |
| 10 | 537582164 | PLATE<br>*Self-propelled device fixing plate* | 1 | - |
| 11 | 537582165 | SCREW<br>*Cross recessed pan head screw* | 1 | - |
| 12 | 538681201 | DRIVE SCREW<br>*M5 Nut* | 3 | - |
| 13 | 537582167 | BOLT<br>*Cross tapping bolt ST4 8x12* | 2 | - |
| 14 | 537582168 | BEARING<br>*Low speed bearing* | 6 | - |
| 15 | 537582169 | WHEEL<br>*Wheel axle sleeve (11" wheel)* | 2 | - |
| 16 | 501067001 | WHEEL ASSY<br>*Wheel Assy 11"* | 2 | - |
| 17 | 537582170 | GEAR<br>*Driven gear* | 2 | - |
| 18 | 537582171 | BOLT<br>*Wheel gear bolt* | 6 | - |
| 19 | 587251701 | DUST COVER<br>*Wheel cap 11"* | 2 | - |
| 20 | 532404845 | PAWL<br>*Gear Pin* | 2 | - |
| 21 | 587232401 | PINION<br>*Driving Gear 11* | 2 | - |
| 22 | 581127601 | SCREW<br>*Lifting mechanism fixing bolt* | 4 | - |
| 23 | 537582172 | PLATE<br>*Lifting mechanism fixing plate* | 2 | - |
| 24 | 537582173 | SLEEVE<br>*Lifting mechanism shaft sleeve* | 2 | - |
| 25 | 537582174 | SPRING<br>*Height adjusting tension spring* | 1 | - |

| Ref. | Article N. | Description | Qty | Kit |
|---|---|---|---|---|
| 26 | 537582175 | SPRING<br>*Height adjusting torsion spring* | 1 | - |
| 27 | 537582176 | COVER<br>*Height adjusting handle (Left cover)* | 1 | - |
| 28 | 537582177 | COVER<br>*Height adjusting handle (Right cover)* | 1 | - |
| 29 | 537582178 | PIN<br>*Cotter pin* | 1 | - |
| 30 | 537582179 | SCREW<br>*Cross recessed pan head tapping screw ST4 * 10* | 2 | - |
| 31 | 537582180 | ROD<br>*Connecting rod* | 1 | - |
| 32 | 537582181 | NUT<br>*M6 lock nut(blacking)* | 2 | - |
| 33 | 537582182 | CIRCLIP<br>*Lifting mechanism open circlip* | 2 | - |
| 34 | 537582183 | ROD<br>*Feight adjusting rod* | 1 | - |
| 1 | 537582184 | BAR<br>*LT ALU EXTRUSION HANDLE BAR* | 1 | - |
| 2 | 537582185 | BAR<br>*RT ALU EXTRUSION HANDLE BAR* | 1 | - |
| 3 | 537582186 | CABLE<br>*FOLDING MECHANISM CABLE* | 2 | - |
| 4 | 537582187 | PLATE<br>*FOLDING STOP PLATE (RIGHT)* | 1 | - |
| 5 | 537582188 | PLATE<br>*FOLDING STOP PLATE (LEFT)* | 1 | - |
| 6 | 537582189 | PAWL<br>*LIMIT PAWL (RIGHT)* | 1 | - |
| 7 | 537582190 | PAWL<br>*LIMIT PAWL (LEFT)* | 2 | - |
| 8 | 537582191 | BOLT<br>*FOLDING STOP PLATE BOLT* | 1 | - |
| 9 | 537582192 | SPRING<br>*LIMIT PAWL TORSION SPRING RT* | 1 | - |
| 10 | 537582193 | SPRING<br>*LIMIT PAWL TORSION SPRING LT* | 1 | - |
| 11 | 537582194 | BRACKET<br>*EXTRUSION SUPPORT BRACKET LT* | 1 | - |
| 12 | 537582195 | BRACKET<br>*EXTRUSION SUPPORT BRACKET RT* | 2 | - |
| 13 | 537582196 | SLEEVE | 2 | - |

| Ref. | Article N. | Description | Qty | Kit |
|---|---|---|---|---|
| | | *PUSH ROD LIMIT SLEEVE* | | |
| 14 | 538971101 | DRIVE SCREW<br>*DRIVE SCREW LOWER EXTRUSION BO* | 4 | - |
| 15 | 587599901 | NUT<br>*NUT.FLANGE.SERRAT.3125-18.5625* | 8 | - |
| 16 | 537582197 | FLANGE<br>*HEXAGON FLANGE BOLT M8X16* | 8 | - |
| 17 | 537582198 | NUT<br>*HEXAGON FLANGE NUT (M8)* | 8 | - |
| 18 | 537582199 | WASHER<br>*ELASTIC WASHER 8* | 8 | - |
| 19 | 537582201 | WASHER<br>*FLAT WASHER 8 GB T97.1* | 1 | - |
| 20 | 537582202 | PLATE<br>*GEAR PLATE* | 2 | - |
| 21 | 537582203 | PLUG<br>*EXTRUSION PLUG* | 4 | - |
| 22 | 537582204 | BOLT<br>*HEXAGON HEAD BOLT M5X70* | 2 | - |
| 23 | 537582205 | BOLT<br>*HEXAGON HEAD BOLT M5* | 1 | - |
| 24 | 538971201 | WIRING ASSY<br>*PARALLEL WIRE HARNESS ASSY* | 1 | - |
| 25 | 537582207 | HARNESS<br>*WIRE HARNESS ASSEMBLY* | 1 | - |
| 26 | 537582210 | LEVER<br>*BRAKE LEVER* | 1 | - |
| 27 | 537582211 | BUTTON<br>*SPEED ADJUSTMENT BUTTON* | 1 | - |
| 28 | 537582212 | MAGNET<br>*HALL MAGNET* | 1 | - |
| 29 | 537582213 | STEEL<br>*3 STEEL BALL* | 1 | - |
| 30 | 538971301 | GUSSET<br>*GUSSET WEAR GASKET* | 4 | - |
| 31 | 537582215 | SPRING<br>*STEEL BALL RETURN SPRING* | 1 | - |
| 32 | 537582216 | BOX<br>*UPPER COVER OF SWITCH BOX* | 1 | - |
| 33 | 537582217 | BOX<br>*LOWER COVER OF SWITCH BOX* | 1 | - |
| 34 | 537582218 | PLATE<br>*SWITCH BOX BUTTON GUIDE PLATE* | 1 | - |

| Ref. | Article N. | Description | Qty | Kit |
|---|---|---|---|---|
| 35 | 537582219 | BOX<br>*SWITCH BOX PCB* | 1 | - |
| 36 | 537582220 | BUTTON<br>*TRIGGER BUTTON (BUTTON 1)* | 1 | - |
| 37 | 537582221 | BUTTON<br>*POWER ON BUTTON (BUTTON 2)* | 1 | - |
| 38 | 537582222 | BUTTON<br>*FUNCTION BUTTON (BUTTON 3)* | 1 | - |
| 39 | 537582223 | SWITCH<br>*SELFPROPELL SWITCH MICROSWITCH* | 2 | - |
| 40 | 537582224 | COVER<br>*HANDLE UPPER COVER* | 1 | - |
| 41 | 537582225 | COVER<br>*HANDLE LOWER COVER* | 1 | - |
| 42 | 537582226 | BUTTON<br>*ACCELERATION BUTTON (LEFT)* | 1 | - |
| 43 | 537582227 | BUTTON<br>*ACCELERATION BUTTON (RIGHT)* | 1 | - |
| 44 | 537582228 | KNOB<br>*BRAKE LEVER SHUT OFF KNOB* | 2 | - |
| 45 | 537582229 | SPRING<br>*BRAKE LEVER RETURN SPRING LT* | 1 | - |
| 46 | 537582230 | SPRING<br>*BRAKE LEVER RETURN SPRING RT* | 1 | - |
| 47 | 537582231 | SWITCH<br>*BRAKE LEVER SWITCH* | 1 | - |
| 48 | 537582232 | PLATE<br>*CRIMPING PLATE* | 1 | - |
| 49 | 537582233 | BUTTON<br>*FOLDING BUTTON* | 1 | - |
| 50 | 537582234 | ROD<br>*FOLDING BUTTON PUSH ROD* | 1 | - |
| 51 | 537582235 | STOPPER<br>*CABLE STOPPER* | 2 | - |
| 52 | 538971401 | DRIVE SCREW<br>*DRIVE SCREW M4X12* | 4 | - |
| 53 | 538680801 | DRIVE SCREW<br>*SCREW SELF TAPPING* | 1 | - |
| 54 | 537582238 | ROD<br>*CABLE CARRYING ROD 2* | 1 | - |
| 55 | 537582239 | ROD<br>*CABLE CARRYING ROD 1* | 1 | - |
| 56 | 537582240 | PLATE | 1 | - |

| Ref. | Article N. | Description | Qty | Kit |
|---|---|---|---|---|
| | | *HNDL WIRE HARNESS PRESS PLATE1* | | |
| 57 | 537582241 | PLATE<br>*HNDL WIRE HARNESS PRESS PLATE2* | 3 | - |
| 58 | 537582242 | ROD<br>*STAY ROD* | 1 | - |
| 59 | 538971501 | DRIVE SCREW<br>*DRIVE SCREW BOLT M4X16* | 2 | - |
| 60 | 538971601 | DRIVE SCREW<br>*DRIVE SCREW ST3X10* | 2 | - |
| 61 | 538970501 | DRIVE SCREW<br>*DRIVE SCREW TORX SCREW* | 3 | - |
| 62 | 537582247 | SCREW<br>*SCREW PANHEAD ST4X10 W/WASHER* | 2 | - |
| 63 | 538971901 | WIRE<br>*WIRE PLUG* | 2 | - |
| 64 | 538971801 | DRIVE SCREW<br>*DRIVE SCREW BOLT ST3X8* | 1 | - |
| 65 | 537582249 | COVER<br>*FOLDING SWITCH UPPER COVER* | 1 | - |
| 66 | 537582250 | COVER<br>*FOLDING SWITCH LOWER COVER* | 1 | - |
| 67 | 537582251 | SWITCH<br>*FOLDING SWITCH SLIDER* | 1 | - |
| 68 | 537582252 | SPRING<br>*SPRING SWITCH SLIDER 5X0.7X13* | 1 | - |
| 69 | 537582253 | SWITCH<br>*FOLDED SWITCH* | 1 | - |
| 70 | 537582254 | SCREW<br>*SCREW PANHEAD M5X10* | 3 | - |
| 71 | 538971901 | WIRE<br>*WIRE PLUG* | 1 | - |
| 1 | 537582101 | COVER<br>*Upper Cover* | 1 | - |
| 2 | 537582102 | FLAP<br>*Flap* | 1 | - |
| 3 | 537582103 | COVER<br>*Left side cover* | 1 | - |
| 4 | 537582104 | COVER<br>*Right side cover* | 1 | - |
| 5 | 537582105 | SPRING<br>*Left torsion spring* | 1 | - |
| 6 | 537582106 | SPRING<br>*Right torsion spring* | 1 | - |

| Ref. | Article N. | Description | Qty | Kit |
|---|---|---|---|---|
| 7 | 537582107 | FILTER<br>*Filter sponge* | 1 | - |
| 8 | 537582108 | SCREW<br>*Torx slotted pan head tapping screw* | 36 | - |
| 9 | 537582109 | SCREW<br>*Hexagon socket Torx pan head tapping half thread screw* | 2 | - |
| 10 | 537582110 | CONTROL<br>*USE BEFORE SERIAL # 20231500001 **REF #10 & REF #11 MUST BE ORDERED TOGETHER* | 1 | - |
| 10 | 548309601 | SERVICE KIT<br>*USE AFTER SERIAL # 20231500001 **REF #10 & REF #11 MUST BE ORDERED TOGETHER* | 1 | - |
| 11 | 537582111 | CONTROL<br>*USE BEFORE SERIAL # 20231500001 **REF #10 & REF #11 MUST BE ORDERED TOGETHER* | 1 | - |
| 11 | 548309701 | SERVICE KIT<br>*USE AFTER SERIAL # 20231500001 **REF #10 & REF #11 MUST BE ORDERED TOGETHER* | 1 | - |
| 12 | 537582112 | CONTROL<br>*Self propelled controller* | 1 | - |
| 13 | 537582113 | BLOCK<br>*Terminal block* | 2 | - |
| 14 | 537582114 | CASE<br>*Red terminal plastic case* | 2 | - |
| 15 | 537582115 | CASE<br>*White terminal plastic case* | 2 | - |
| 16 | 537582116 | CASE<br>*Blue plastic case* | 2 | - |
| 17 | 537582117 | CASE<br>*Black terminal plastic case* | 2 | - |
| 18 | 537582118 | TERMINAL<br>*Terminal* | 6 | - |
| 19 | 537582119 | PIN<br>*Rolled elastic pin 2.5x11* | 4 | - |
| 20 | 538969801 | CONDUCTOR<br>*Black Conductor* | 2 | - |
| 21 | 537582120 | CONDUCTOR<br>*Sampling signal conductor* | 1 | - |
| 22 | 537582121 | BASE<br>*Base* | 1 | - |
| 23 | 537582122 | CAP<br>*Pop up cap* | 4 | - |

| Ref. | Article N. | Description | Qty | Kit |
|---|---|---|---|---|
| 24 | 537582123 | CASE<br>*Battery compartment* | 1 | - |
| 25 | 537582124 | SHIELD<br>*Wind shield* | 1 | - |
| 26 | 537582125 | COVER<br>*Left lamp cover* | 1 | - |
| 27 | 537582126 | COVER<br>*Right lamp cover* | 1 | - |
| 28 | 537582127 | HOLDER<br>*Left lamp holder* | 1 | - |
| 29 | 537582128 | HOLDER<br>*Right lamp holder* | 1 | - |
| 30 | 537582129 | PANEL<br>*Left light panel ass'y* | 1 | - |
| 31 | 537582130 | PANEL<br>*Right light panel ass'y* | 1 | - |
| 32 | 537582131 | SPRING<br>*Ejector spring* | 4 | - |
| 33 | 537582133 | SCREW<br>*Hexagon socket pattern pan head tapping screw* | 6 | - |
| 34 | 537582134 | MOTOR<br>*Motor sit* | 1 | - |
| 35 | 537582135 | MOTOR<br>*Brushless motor* | 1 | - |
| 36 | 537582136 | SCREW<br>*Torx slotted pan head screw* | 4 | - |
| 37 | 537582137 | NUT<br>*Hexagon thick nut* | 4 | - |
| 38 | 537582138 | CONDUCTOR<br>*Self propelled /conductor* | 1 | - |
| 39 | 537582139 | PLATE<br>*Crimping plate* | 1 | - |
| 40 | 537582140 | FAN<br>*Fan* | 1 | - |
| 41 | 537582141 | BLADE<br>*Blade* | 1 | - |
| 42 | 538970201 | DRIVE SCREW<br>*Hexagon bolt (grade 10.9)* | 1 | - |
| 43 | 538970301 | SPRING<br>*Spring washer* | 1 | - |
| 44 | 538970401 | RETAINER RING<br>*Blade washer* | 1 | - |
| 45 | 537582144 | BOLT | 3 | - |

| Ref. | Article N. | Description | Qty | Kit |
|---|---|---|---|---|
| | | *Hexagon head bolt M10x20* | | |
| 46 | 537582145 | NUT<br>*Hexagon lock nut* | 3 | - |
| 47 | 538969901 | CIRCUIT BREAKER<br>*Magnetic ring assembly* | 2 | - |
| 1 | 538971001 | BAG FRAME<br>*Grass catcher bag* | 1 | - |
| 2 | 586922701 | MULCHING PLUG<br>*Mulching plug* | 1 | - |
| 3 | 538680501 | CHUTE<br>*Side Discharge Chute* | 1 | - |
| 4 | 586929102 | BAG FRAME<br>*Grass catcher bag bracket* | 1 | - |