Product Catalog: Husqvarna/Z242F (Kawasaki 21,5 hp)

DECALS

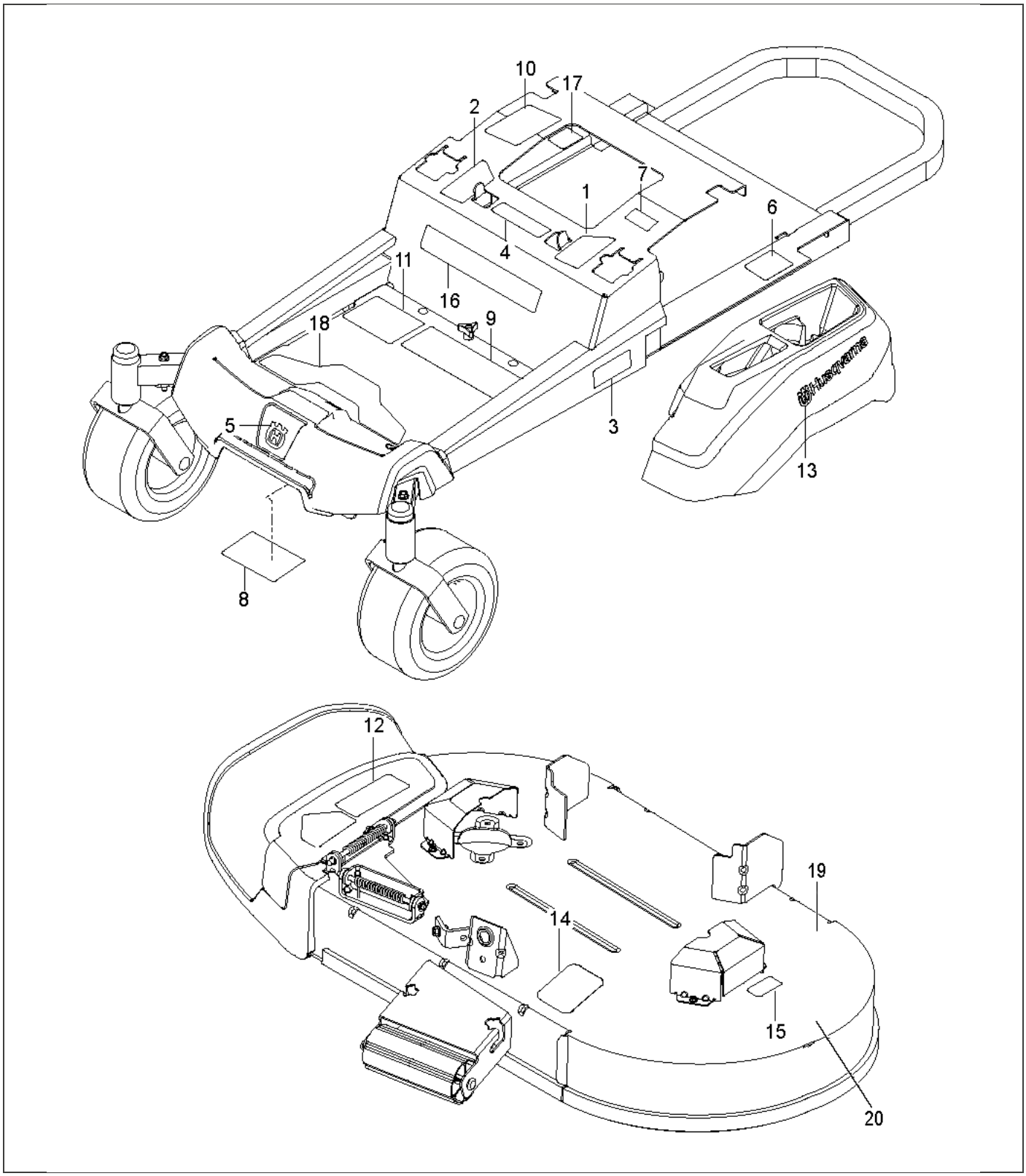

Ref.	Article N.	Description	Qty	Kit
1	587595601	DECAL	1	-
2	587595501	DECAL	1	-
3	587769201	DECAL	2	-
3	587769202	DECAL *Z242F SPECIAL EDITION SIDE RAIL DECAL*	1	-
4	539105745	DECAL	1	-
5	532428677	DECAL	1	-
6	539108385	DECAL	1	-
6	585142401	DECAL *For 970458801, FRENCH*	1	-
7	539108386	DECAL	1	-
8	539109897	DECAL	1	-
8	585142501	DECAL *For 970458801, FRENCH*	1	-
9	590485501	DECAL	1	-
9	598655402	DECAL *For 970458801, FRENCH*	1	-
9	537449102	DECAL *STARTING INSTRUCTIONS FRENCH 97072990500*	1	-
10	532423829	DECAL	1	-
11	588035101	DECAL	1	-
12	586978801	DECAL	1	-
13	577469001	DECAL	2	-
14	510240201	DECAL	1	-
15	589357901	DECAL	2	-
16	501082601	DECAL *For 970458801-01, 970458801-00*	1	-
16	591357301	DECAL *For 96766570300, 967953801-01*	1	-
17	581724102	DECAL	1	-
18	587000701	PAD *For 96766570300, 967953801-01*	1	-
18	593363001	DECAL *For 970458801-01, 970458801-00*	1	-
19	592898301	DECAL *For 96766570300, 967953801-01*	1	-
20	590884901	DECAL *For 96766570300, 967953801-01*	1	-
21	536831101	DECAL *For 96795380400, 96795380400 RH Park Brake Decal*	1	-
22	536831102	DECAL	1	-

Ref.	Article N.	Description	Qty	Kit
		For 96795380400, 96795380400 LH Park Brake Decal		
1	593898602	PLATE	1	-
2	587241601	CLUTCH	1	-
3	583955701	TUBE	1	-
4	583955601	TUBE	1	-
5	581886702	BRACKET	1	-
6	532448145	ARM	1	-
7	582538901	SPINDLE	1	-
8	532193197	PULLEY	1	-
9	587537401	PULLEY	1	-
10	587660101	SPACER	1	-
11	539132859	HEAT SHIELD	1	-
12	587633302	STOP	1	-
13	587451202	GUARD	1	-
14	539131604	MUFFLER ASSY	1	-
15	532196105	SPRING	1	-
16	584825501	HOSE ASSY *For all except 96766570100, 96795380400, 97045880101 & 97072990500*	1	-
16	532148456	TUBE *For 96766570100, 96795380400, 97045880101 & 97072990500*	1	-
17	539101363	CLAMP *For all except 96766570100, 96795380400, 97045880101 & 97072990500*	1	-
18	522599001	ADAPTER *For all except 96766570100, 96795380400, 97045880101 & 97072990500*	1	-
19	585807101	PLUG *For all except 96766570100, 96795380400, 97045880101 & 97072990500*	1	-
20	501603701	BEARING	2	-
21	582539501	BOLT	1	-
22	874520656	BOLT	1	-
23	872140506	BOLT *For 970458801-01, 970458801-00*	2	-
23	539990208	SCREW *For 96766570300, 967953801-01*	2	-
24	872140508	BOLT *For 970458801-01, 970458801-00*	2	-
24	539990316	BOLT *For 96766570300, 967953801-01*	2	-
25	581332803	BOLT	1	-
26	817490410	SCREW *For all except 96766570100, 96795380400, 97045880101 & 97072990500*	1	-
27	539976949	BOLT	1	-

Ref.	Article N.	Description	Qty	Kit
		For 970458801-01, 970458801-00		
27	874780620	BOLT *For 96766570300, 967953801-01*	4	-
28	817490512	SCREW	4	-
29	521991101	NUT	1	-
30	539112899	NUT, 5/16-18, NYLOC	5	-
31	539976979	NUT	2	-
32	539990692	WASHER	2	-
33	532126197	WASHER	1	-
34	810030600	WASHER *For 970458801-01, 970458801-00*	4	-
34	539990118	WASHER *For 96766570300, 967953801-01*	4	-
35	532178151	GASKET	2	-
36	532184362	NUT	4	-
41	522598601	WIRING ASSY *KAWASAKI ENG ONLY*	1	-
42	589543901	INSTRUCTION *NOT SHOWN*	1	-
1	585522801	CONSOLE ASSY	1	-
1	598602606	CONSOLE ASSY *For 96795380400*	1	-
2	586621201	CONSOLE ASSY	1	-
2	586621203	CONSOLE ASSY *For 96795380400*	1	-
3	589924705	FUEL TANK ASSY *Fits 2.75 filler neck*	1	-
3	531016702	FUEL TANK ASSY *For 96795380400*	1	-
4	529989702	CAP *Fits 2.00 filler neck*	1	-
4	585124801	FUEL CAP ASSY *Fits 2.75 filler neck*	1	-
5	539112438	THROTTLE CABLE	1	-
6	586881501	CHOKE CONTROL ASSY	1	-
7	539107541	IGNITION SWITCH	1	-
8	582107602	SWITCH	1	-
9	587601501	SWITCH	2	-
10	539133049	KNOB	1	-
11	585522701	CONTROL PANEL	1	-
11	585522709	CONTROL PANEL	1	-

Ref.	Article N.	Description	Qty	Kit
		For 96795380400		
12	532123899	BATTERY *Round Terminal (B)*	1	-
12	579411601	BATTERY *Square Terminal (A)*	1	-
13	510030003	BRACKET	1	-
14	582609602	BOX	1	-
15	532131563	COVER	3	-
16	539102759	INSULATOR	1	-
17	576618101	TANK VENT	1	-
18	539916325	VALVE	1	-
19	586123906	FUEL HOSE	1	-
20	582042801	SOLENOID	1	-
21	587198601	HARNESS	1	-
22	587044550	HOSE	1	-
23	587044810	HOSE	1	-
24	587044818	HOSE	1	-
25	532123487	HOSE CLAMP	4	-
26	532003645	BUSHING	1	-
27	532437492	GROMMET	1	-
28	532139277	NIPPLE	1	-
29	586161801	HOUR METER	1	-
30	532140401	KEY	1	-
31	586108201	HARNESS	1	-
32	588839401	HOOK	2	-
33	545227101	SCREW	2	-
34	539111229	SCREW	1	-
35	532141841	SCREW	2	-
36	586936001	SCREW *For 970458801-01, 970458801-00*	2	-
36	574822701	SCREW *For 96766570300, 967953801-01*	2	-
37	539990645	BOLT	2	-
38	595901601	BOLT *Square Terminal (A)*	2	-
38	872140506	BOLT *For 970458801-01, 970458801-00*	2	-
38	874760412	BOLT *Round Terminal (B) For 96766570300, 967953801-01*	2	-
39	817490408	SCREW	2	-

Ref.	Article N.	Description	Qty	Kit
40	594944401	NUT *Square Terminal (A)*	2	-
40	596133601	LOCK NUT *Round Terminal (B) For 96766570300, 967953801-01*	2	-
40	539112899	NUT, 5/16-18, NYLOC *For 970458801-01, 970458801-00*	2	-
41	521996501	NUT	2	-
42	539976978	NUT	5	-
48	586337301	HARNESS *NOT SHOWN*	1	-
49	532109748	RELAY *NOT SHOWN*	1	-
50	586548101	HARNESS	1	-
51	505280001	TIE WRAP	1	-
1	587623101	SHAFT ASSY *For 970458801-01, 970458801-00*	1	-
1	586429702	SHAFT ASSY *For 96766570300, 967953801-01*	1	-
2	586457101	LINK	1	-
3	586457201	LINK	2	-
4	587622901	LIFTING LEVER ASSY *For 970458801-01, 970458801-00*	1	-
4	586428701	HANDLE *For 96766570300, 967953801-01*	1	-
5	580486101	SPACER	2	-
6	585682102	BRACKET	2	-
7	525847201	LINK	2	-
8	580962301	GRIP	1	-
9	586867601	SPRING	1	-
10	532196314	SPRING *For 970458801-01, 970458801-00*	1	-
11	532195161	STUD	1	-
12	587225301	PIN *For 970458801-01, 970458801-00*	2	-
13	532196314	SPRING *For 970458801-01, 970458801-00*	1	-
13	532194209	SPRING *For 96766570300, 967953801-01*	4	-
14	587225301	PIN *For 970458801-01, 970458801-00*	4	-
14	532194208	PIN *For 96766570300, 967953801-01*	4	-

Ref.	Article N.	Description	Qty	Kit
15	510184901	BUSHING	2	-
16	585701401	PIN	2	-
17	586457501	BELLCRANK	2	-
18	586457401	BELLCRANK	1	-
19	585682001	ROD	1	-
20	532137729	SCREW	2	-
21	586561301	SCREW	2	-
22	532175994	NUT	1	-
23	812000002	RETAINER RING	1	-
24	819131316	WASHER	1	-
25	587623001	LINK ASSY *For 970458801-01, 970458801-00*	2	-
25	522858601	LINK ASSY *For 96766570300, 967953801-01*	2	-
26	539112899	NUT, 5/16-18, NYLOC	2	-
27	819212113	WASHER	2	-
28	532445060	LEVER *For 970458801-01, 970458801-00*	1	-
29	539118762	SPRING *For 970458801-01, 970458801-00*	1	-
1	597658101	SEAT *For 96795380100, 96795380200, 96795380300,*	1	-
1	536178101	SEAT *For 96795380400, 967665704, 970729905*	1	-
1	532406625	SEAT *For 967271801*	1	-
1	532439822	SEAT *For 967271802, 967271901, 967324403, 967665701*	1	-
1	597658102	SEAT *For 970458801*	1	-
1	536178103	SEAT *For 97045880101*	1	-
2	596992703	BRACKET	1	-
2	596768801	MODULE *Seat Pan For 967271801, 967271802, 967271901, 967324403, 967665701, 970458801*	1	-
2	598001601	SERVICE KIT *Seat Pan For 967665704, 970729905*	1	-
3	586220802	SUPPORT PLATE	1	-
4	586221202	PLATE	1	-
5	589481206	PLATE	1	-

Ref.	Article N.	Description	Qty	Kit
6	580308202	SUPPORT	2	-
8	589483501	SPRING	2	-
9	532192749	SWITCH	1	-
11	586428601	SUPPORT LEG	1	-
12	585989301	BUMPER	2	-
13	539104763	CLIP	5	-
14	539990316	BOLT	4	-
15	510422701	SCREW	2	-
16	874780620	BOLT	2	-
17	582478702	BUMPER	1	-
18	539110303	BOLT	2	-
19	874490512	BOLT	4	-
20	817000510	BOLT	6	-
21	539112899	NUT, 5/16-18, NYLOC	4	-
22	873900400	NUT	2	-
23	819141614	WASHER	1	-
24	590899903	BRACKET	2	-
25	589028501	SCREW	1	-
26	539102587	ABSORBER	1	-
27	597658203	SERVICE KIT	1	-
28	597959401	COVER	1	-
1	546963201	WHEEL ASSY *Fits 970729905*	2	-
1	590486701	WHEEL *FITS 967271801, 967271802, 967271901, 967665701, 970458801*	2	-
1	538672601	WHEEL *Fits 967665704, 967324403*	2	-
2	590486802	WHEEL *Fits 967271802*	2	-
2	595910102	WHEEL ASSY *Fits 970729905*	2	-
2	576588602	WHEEL ASSY *Fits 967665704, 967324403, 967665701, 967271801, 967271901, 970458801*	2	-
3	586650310	YOKE *Fits 970729905*	2	-
3	586650302	YOKE *Fits 967665704, 967324403, 967665701, 967271801, 967271901, 970458801*	2	-
3	510186505	YOKE *Fits 967271802*	2	-
4	539115638	FITTING *Fits 967271801, 967271802, 967324403*	2	-

Ref.	Article N.	Description	Qty	Kit
4	596623501	VALVE *Fits 967665704, 970729905, 967665701, 970458801, 967271901*	2	-
5	539103300	NIPPLE *NIPPLIE*	2	-
6	539112660	BEARING *BEARING*	2	-
7	539117901	BLADE BUSHING *BUSHING*	2	-
8	539102535	CAP *CAP*	2	-
9	539115749	PLUG *PLUG*	2	-
10	585995401	SPACER *SPACER*	2	-
11	539115747	SPRING *SPRING*	2	-
12	874950516	SCREW *SCREW*	2	-
13	576601503	SCREW *SCREW*	2	-
14	521991103	NUT *NUT*	2	-
15	587653902	NUT *NUT*	8	-
16	539115675	WASHER *WASHER*	2	-
17	819182212	WASHER *WASHER*	2	-
1	597658101	SEAT *For 96795380100, 96795380200, 96795380300*	1	-
1	536178101	SEAT *For 96795380400, 967665704, 970729905*	1	-
1	532406625	SEAT *For 967271801*	1	-
1	532439822	SEAT *For 967271802, 967271901, 967324403, 967665701*	1	-
1	597658102	SEAT *For 970458801*	1	-
2	597330002	BRACKET	1	-
2	598001601	SERVICE KIT *For 967665704, 970729905*	1	-
2	596768801	MODULE *For 967271801, 967271802, 967271901, 967324403, 967665701, 970458801*	1	-

Ref.	Article N.	Description	Qty	Kit
3	586220802	SUPPORT PLATE	1	-
4	586221202	PLATE	1	-
5	597160003	PLATE	1	-
6	580308202	SUPPORT	1	-
7	590777602	BRACKET	1	-
8	596240701	BOLT	2	-
9	532192749	SWITCH	1	-
10	594944401	NUT	2	-
11	586428601	SUPPORT LEG	1	-
12	585989301	BUMPER	2	-
13	539104763	CLIP	5	-
14	539990316	BOLT	4	-
15	510422701	SCREW	2	-
16	521996502	NUT	2	-
17	597781801	BOLT	2	-
18	597553401	BUMPER	2	-
19	874490512	BOLT	4	-
20	817000510	BOLT	6	-
21	597783101	KNOB	2	-
22	598001601	SERVICE KIT	1	-
22	597298202	BRACKET *Fits 967665703-00*	1	-
23	597658203	SERVICE KIT	1	-
24	597959401	COVER	1	-
25	539112899	NUT, 5/16-18, NYLOC	4	-
26	597869301	BOLT	2	-

ENGINE MOUNTING, GUARDS AND MUFFLER

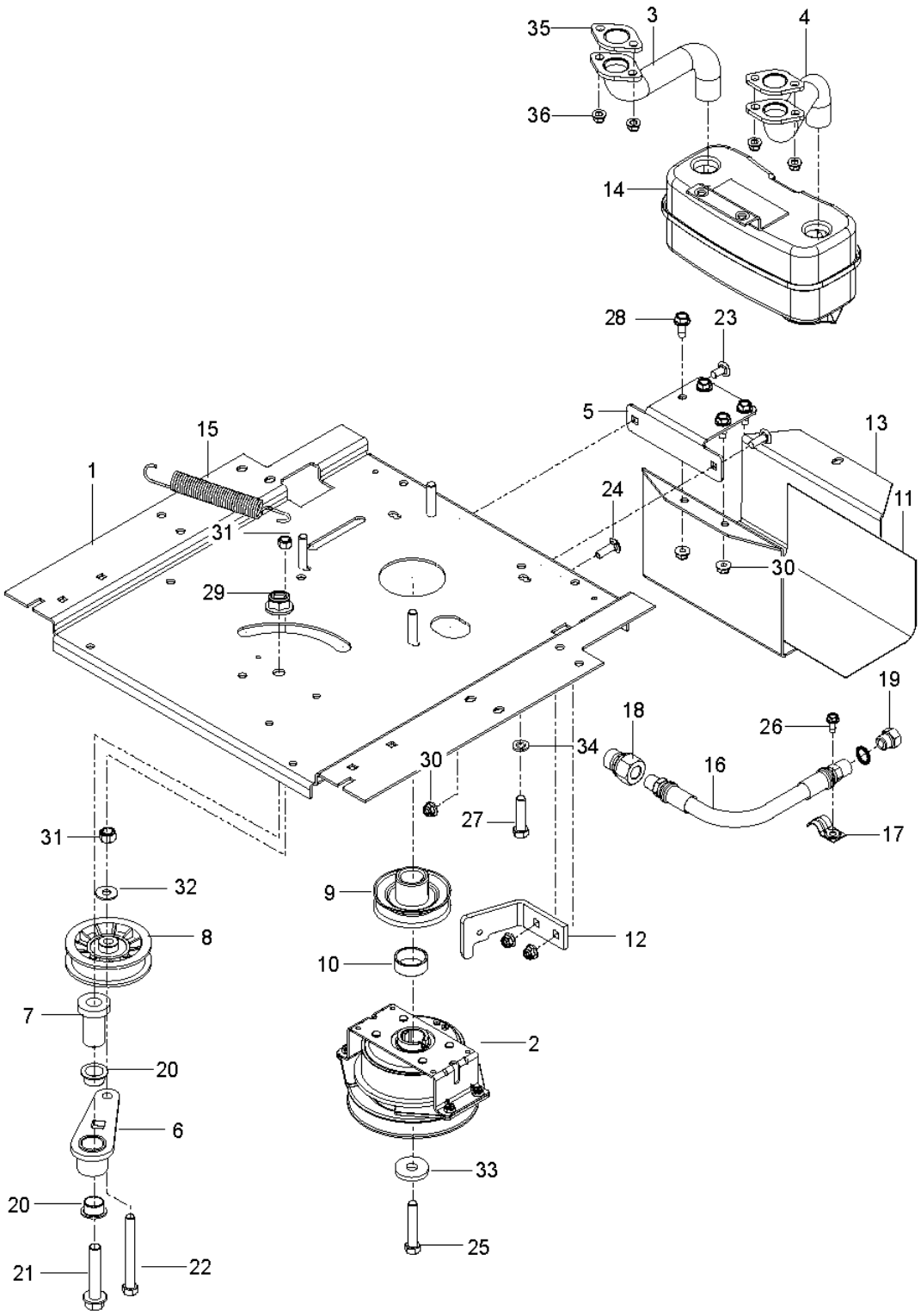

Ref.	Article N.	Description	Qty	Kit
1	587595601	DECAL	1	-
2	587595501	DECAL	1	-
3	587769201	DECAL	2	-
3	587769202	DECAL *Z242F SPECIAL EDITION SIDE RAIL DECAL*	1	-
4	539105745	DECAL	1	-

Ref.	Article N.	Description	Qty	Kit
5	532428677	DECAL	1	-
6	539108385	DECAL	1	-
6	585142401	DECAL *For 970458801, FRENCH*	1	-
7	539108386	DECAL	1	-
8	539109897	DECAL	1	-
8	585142501	DECAL *For 970458801, FRENCH*	1	-
9	590485501	DECAL	1	-
9	598655402	DECAL *For 970458801, FRENCH*	1	-
9	537449102	DECAL *STARTING INSTRUCTIONS FRENCH 97072990500*	1	-
10	532423829	DECAL	1	-
11	588035101	DECAL	1	-
12	586978801	DECAL	1	-
13	577469001	DECAL	2	-
14	510240201	DECAL	1	-
15	589357901	DECAL	2	-
16	501082601	DECAL *For 970458801-01, 970458801-00*	1	-
16	591357301	DECAL *For 96766570300, 967953801-01*	1	-
17	581724102	DECAL	1	-
18	587000701	PAD *For 96766570300, 967953801-01*	1	-
18	593363001	DECAL *For 970458801-01, 970458801-00*	1	-
19	592898301	DECAL *For 96766570300, 967953801-01*	1	-
20	590884901	DECAL *For 96766570300, 967953801-01*	1	-
21	536831101	DECAL *For 96795380400, 96795380400 RH Park Brake Decal*	1	-
22	536831102	DECAL *For 96795380400, 96795380400 LH Park Brake Decal*	1	-
1	593898602	PLATE	1	-
2	587241601	CLUTCH	1	-
3	583955701	TUBE	1	-
4	583955601	TUBE	1	-
5	581886702	BRACKET	1	-

Ref.	Article N.	Description	Qty	Kit
6	532448145	ARM	1	-
7	582538901	SPINDLE	1	-
8	532193197	PULLEY	1	-
9	587537401	PULLEY	1	-
10	587660101	SPACER	1	-
11	539132859	HEAT SHIELD	1	-
12	587633302	STOP	1	-
13	587451202	GUARD	1	-
14	539131604	MUFFLER ASSY	1	-
15	532196105	SPRING	1	-
16	584825501	HOSE ASSY *For all except 96766570100, 96795380400, 97045880101 & 97072990500*	1	-
16	532148456	TUBE *For 96766570100, 96795380400, 97045880101 & 97072990500*	1	-
17	539101363	CLAMP *For all except 96766570100, 96795380400, 97045880101 & 97072990500*	1	-
18	522599001	ADAPTER *For all except 96766570100, 96795380400, 97045880101 & 97072990500*	1	-
19	585807101	PLUG *For all except 96766570100, 96795380400, 97045880101 & 97072990500*	1	-
20	501603701	BEARING	2	-
21	582539501	BOLT	1	-
22	874520656	BOLT	1	-
23	872140506	BOLT *For 970458801-01, 970458801-00*	2	-
23	539990208	SCREW *For 96766570300, 967953801-01*	2	-
24	872140508	BOLT *For 970458801-01, 970458801-00*	2	-
24	539990316	BOLT *For 96766570300, 967953801-01*	2	-
25	581332803	BOLT	1	-
26	817490410	SCREW *For all except 96766570100, 96795380400, 97045880101 & 97072990500*	1	-
27	539976949	BOLT *For 970458801-01, 970458801-00*	1	-
27	874780620	BOLT *For 96766570300, 967953801-01*	4	-
28	817490512	SCREW	4	-
29	521991101	NUT	1	-
30	539112899	NUT, 5/16-18, NYLOC	5	-

Ref.	Article N.	Description	Qty	Kit
31	539976979	NUT	2	-
32	539990692	WASHER	2	-
33	532126197	WASHER	1	-
34	810030600	WASHER *For 970458801-01, 970458801-00*	4	-
34	539990118	WASHER *For 96766570300, 967953801-01*	4	-
35	532178151	GASKET	2	-
36	532184362	NUT	4	-
41	522598601	WIRING ASSY *KAWASAKI ENG ONLY*	1	-
42	589543901	INSTRUCTION *NOT SHOWN*	1	-
1	585522801	CONSOLE ASSY	1	-
1	598602606	CONSOLE ASSY *For 96795380400*	1	-
2	586621201	CONSOLE ASSY	1	-
2	586621203	CONSOLE ASSY *For 96795380400*	1	-
3	589924705	FUEL TANK ASSY *Fits 2.75 filler neck*	1	-
3	531016702	FUEL TANK ASSY *For 96795380400*	1	-
4	529989702	CAP *Fits 2.00 filler neck*	1	-
4	585124801	FUEL CAP ASSY *Fits 2.75 filler neck*	1	-
5	539112438	THROTTLE CABLE	1	-
6	586881501	CHOKE CONTROL ASSY	1	-
7	539107541	IGNITION SWITCH	1	-
8	582107602	SWITCH	1	-
9	587601501	SWITCH	2	-
10	539133049	KNOB	1	-
11	585522701	CONTROL PANEL	1	-
11	585522709	CONTROL PANEL *For 96795380400*	1	-
12	532123899	BATTERY *Round Terminal (B)*	1	-
12	579411601	BATTERY *Square Terminal (A)*	1	-
13	510030003	BRACKET	1	-

Ref.	Article N.	Description	Qty	Kit
14	582609602	BOX	1	-
15	532131563	COVER	3	-
16	539102759	INSULATOR	1	-
17	576618101	TANK VENT	1	-
18	539916325	VALVE	1	-
19	586123906	FUEL HOSE	1	-
20	582042801	SOLENOID	1	-
21	587198601	HARNESS	1	-
22	587044550	HOSE	1	-
23	587044810	HOSE	1	-
24	587044818	HOSE	1	-
25	532123487	HOSE CLAMP	4	-
26	532003645	BUSHING	1	-
27	532437492	GROMMET	1	-
28	532139277	NIPPLE	1	-
29	586161801	HOUR METER	1	-
30	532140401	KEY	1	-
31	586108201	HARNESS	1	-
32	588839401	HOOK	2	-
33	545227101	SCREW	2	-
34	539111229	SCREW	1	-
35	532141841	SCREW	2	-
36	586936001	SCREW *For 970458801-01, 970458801-00*	2	-
36	574822701	SCREW *For 96766570300, 967953801-01*	2	-
37	539990645	BOLT	2	-
38	595901601	BOLT *Square Terminal (A)*	2	-
38	872140506	BOLT *For 970458801-01, 970458801-00*	2	-
38	874760412	BOLT *Round Terminal (B) For 96766570300, 967953801-01*	2	-
39	817490408	SCREW	2	-
40	594944401	NUT *Square Terminal (A)*	2	-
40	596133601	LOCK NUT *Round Terminal (B) For 96766570300, 967953801-01*	2	-
40	539112899	NUT, 5/16-18, NYLOC *For 970458801-01, 970458801-00*	2	-

Ref.	Article N.	Description	Qty	Kit
41	521996501	NUT	2	-
42	539976978	NUT	5	-
48	586337301	HARNESS *NOT SHOWN*	1	-
49	532109748	RELAY *NOT SHOWN*	1	-
50	586548101	HARNESS	1	-
51	505280001	TIE WRAP	1	-
1	587623101	SHAFT ASSY *For 970458801-01, 970458801-00*	1	-
1	586429702	SHAFT ASSY *For 96766570300, 967953801-01*	1	-
2	586457101	LINK	1	-
3	586457201	LINK	2	-
4	587622901	LIFTING LEVER ASSY *For 970458801-01, 970458801-00*	1	-
4	586428701	HANDLE *For 96766570300, 967953801-01*	1	-
5	580486101	SPACER	2	-
6	585682102	BRACKET	2	-
7	525847201	LINK	2	-
8	580962301	GRIP	1	-
9	586867601	SPRING	1	-
10	532196314	SPRING *For 970458801-01, 970458801-00*	1	-
11	532195161	STUD	1	-
12	587225301	PIN *For 970458801-01, 970458801-00*	2	-
13	532196314	SPRING *For 970458801-01, 970458801-00*	1	-
13	532194209	SPRING *For 96766570300, 967953801-01*	4	-
14	587225301	PIN *For 970458801-01, 970458801-00*	4	-
14	532194208	PIN *For 96766570300, 967953801-01*	4	-
15	510184901	BUSHING	2	-
16	585701401	PIN	2	-
17	586457501	BELLCRANK	2	-
18	586457401	BELLCRANK	1	-
19	585682001	ROD	1	-

Ref.	Article N.	Description	Qty	Kit
20	532137729	SCREW	2	-
21	586561301	SCREW	2	-
22	532175994	NUT	1	-
23	812000002	RETAINER RING	1	-
24	819131316	WASHER	1	-
25	587623001	LINK ASSY *For 970458801-01, 970458801-00*	2	-
25	522858601	LINK ASSY *For 96766570300, 967953801-01*	2	-
26	539112899	NUT, 5/16-18, NYLOC	2	-
27	819212113	WASHER	2	-
28	532445060	LEVER *For 970458801-01, 970458801-00*	1	-
29	539118762	SPRING *For 970458801-01, 970458801-00*	1	-
1	597658101	SEAT *For 96795380100, 96795380200, 96795380300,*	1	-
1	536178101	SEAT *For 96795380400, 967665704, 970729905*	1	-
1	532406625	SEAT *For 967271801*	1	-
1	532439822	SEAT *For 967271802, 967271901, 967324403, 967665701*	1	-
1	597658102	SEAT *For 970458801*	1	-
1	536178103	SEAT *For 97045880101*	1	-
2	596992703	BRACKET	1	-
2	596768801	MODULE *Seat Pan For 967271801, 967271802, 967271901, 967324403, 967665701, 970458801*	1	-
2	598001601	SERVICE KIT *Seat Pan For 967665704, 970729905*	1	-
3	586220802	SUPPORT PLATE	1	-
4	586221202	PLATE	1	-
5	589481206	PLATE	1	-
6	580308202	SUPPORT	2	-
8	589483501	SPRING	2	-
9	532192749	SWITCH	1	-
11	586428601	SUPPORT LEG	1	-
12	585989301	BUMPER	2	-

Ref.	Article N.	Description	Qty	Kit
13	539104763	CLIP	5	-
14	539990316	BOLT	4	-
15	510422701	SCREW	2	-
16	874780620	BOLT	2	-
17	582478702	BUMPER	1	-
18	539110303	BOLT	2	-
19	874490512	BOLT	4	-
20	817000510	BOLT	6	-
21	539112899	NUT, 5/16-18, NYLOC	4	-
22	873900400	NUT	2	-
23	819141614	WASHER	1	-
24	590899903	BRACKET	2	-
25	589028501	SCREW	1	-
26	539102587	ABSORBER	1	-
27	597658203	SERVICE KIT	1	-
28	597959401	COVER	1	-
1	546963201	WHEEL ASSY *Fits 970729905*	2	-
1	590486701	WHEEL *FITS 967271801, 967271802, 967271901, 967665701, 970458801*	2	-
1	538672601	WHEEL *Fits 967665704, 967324403*	2	-
2	590486802	WHEEL *Fits 967271802*	2	-
2	595910102	WHEEL ASSY *Fits 970729905*	2	-
2	576588602	WHEEL ASSY *Fits 967665704, 967324403, 967665701, 967271801, 967271901, 970458801*	2	-
3	586650310	YOKE *Fits 970729905*	2	-
3	586650302	YOKE *Fits 967665704, 967324403, 967665701, 967271801, 967271901, 970458801*	2	-
3	510186505	YOKE *Fits 967271802*	2	-
4	539115638	FITTING *Fits 967271801, 967271802, 967324403*	2	-
4	596623501	VALVE *Fits 967665704, 970729905, 967665701, 970458801, 967271901*	2	-
5	539103300	NIPPLE *NIPPLIE*	2	-
6	539112660	BEARING	2	-

Ref.	Article N.	Description	Qty	Kit
		BEARING		
7	539117901	BLADE BUSHING *BUSHING*	2	-
8	539102535	CAP *CAP*	2	-
9	539115749	PLUG *PLUG*	2	-
10	585995401	SPACER *SPACER*	2	-
11	539115747	SPRING *SPRING*	2	-
12	874950516	SCREW *SCREW*	2	-
13	576601503	SCREW *SCREW*	2	-
14	521991103	NUT *NUT*	2	-
15	587653902	NUT *NUT*	8	-
16	539115675	WASHER *WASHER*	2	-
17	819182212	WASHER *WASHER*	2	-
1	597658101	SEAT *For 96795380100, 96795380200, 96795380300*	1	-
1	536178101	SEAT *For 96795380400, 967665704, 970729905*	1	-
1	532406625	SEAT *For 967271801*	1	-
1	532439822	SEAT *For 967271802, 967271901, 967324403, 967665701*	1	-
1	597658102	SEAT *For 970458801*	1	-
2	597330002	BRACKET	1	-
2	598001601	SERVICE KIT *For 967665704, 970729905*	1	-
2	596768801	MODULE *For 967271801, 967271802, 967271901, 967324403, 967665701, 970458801*	1	-
3	586220802	SUPPORT PLATE	1	-
4	586221202	PLATE	1	-
5	597160003	PLATE	1	-
6	580308202	SUPPORT	1	-

Ref.	Article N.	Description	Qty	Kit
7	590777602	BRACKET	1	-
8	596240701	BOLT	2	-
9	532192749	SWITCH	1	-
10	594944401	NUT	2	-
11	586428601	SUPPORT LEG	1	-
12	585989301	BUMPER	2	-
13	539104763	CLIP	5	-
14	539990316	BOLT	4	-
15	510422701	SCREW	2	-
16	521996502	NUT	2	-
17	597781801	BOLT	2	-
18	597553401	BUMPER	2	-
19	874490512	BOLT	4	-
20	817000510	BOLT	6	-
21	597783101	KNOB	2	-
22	598001601	SERVICE KIT	1	-
22	597298202	BRACKET *Fits 967665703-00*	1	-
23	597658203	SERVICE KIT	1	-
24	597959401	COVER	1	-
25	539112899	NUT, 5/16-18, NYLOC	4	-
26	597869301	BOLT	2	-

IGNITION SYSTEM

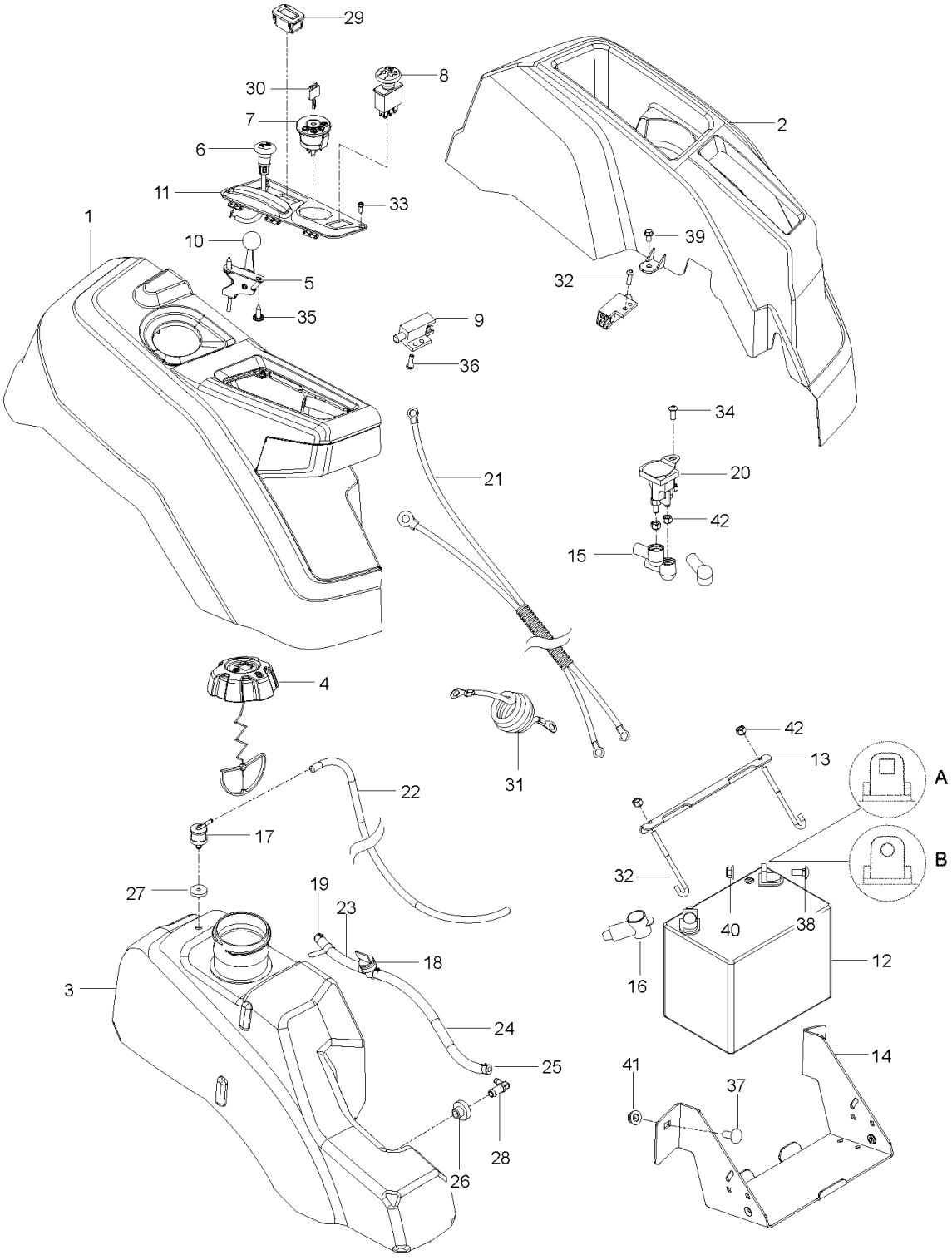

Ref.	Article N.	Description	Qty	Kit
1	587595601	DECAL	1	-
2	587595501	DECAL	1	-
3	587769201	DECAL	2	-
3	587769202	DECAL *Z242F SPECIAL EDITION SIDE RAIL DECAL*	1	-
4	539105745	DECAL	1	-

Ref.	Article N.	Description	Qty	Kit
5	532428677	DECAL	1	-
6	539108385	DECAL	1	-
6	585142401	DECAL *For 970458801, FRENCH*	1	-
7	539108386	DECAL	1	-
8	539109897	DECAL	1	-
8	585142501	DECAL *For 970458801, FRENCH*	1	-
9	590485501	DECAL	1	-
9	598655402	DECAL *For 970458801, FRENCH*	1	-
9	537449102	DECAL *STARTING INSTRUCTIONS FRENCH 97072990500*	1	-
10	532423829	DECAL	1	-
11	588035101	DECAL	1	-
12	586978801	DECAL	1	-
13	577469001	DECAL	2	-
14	510240201	DECAL	1	-
15	589357901	DECAL	2	-
16	501082601	DECAL *For 970458801-01, 970458801-00*	1	-
16	591357301	DECAL *For 96766570300, 967953801-01*	1	-
17	581724102	DECAL	1	-
18	587000701	PAD *For 96766570300, 967953801-01*	1	-
18	593363001	DECAL *For 970458801-01, 970458801-00*	1	-
19	592898301	DECAL *For 96766570300, 967953801-01*	1	-
20	590884901	DECAL *For 96766570300, 967953801-01*	1	-
21	536831101	DECAL *For 96795380400, 96795380400 RH Park Brake Decal*	1	-
22	536831102	DECAL *For 96795380400, 96795380400 LH Park Brake Decal*	1	-
1	593898602	PLATE	1	-
2	587241601	CLUTCH	1	-
3	583955701	TUBE	1	-
4	583955601	TUBE	1	-
5	581886702	BRACKET	1	-

Ref.	Article N.	Description	Qty	Kit
6	532448145	ARM	1	-
7	582538901	SPINDLE	1	-
8	532193197	PULLEY	1	-
9	587537401	PULLEY	1	-
10	587660101	SPACER	1	-
11	539132859	HEAT SHIELD	1	-
12	587633302	STOP	1	-
13	587451202	GUARD	1	-
14	539131604	MUFFLER ASSY	1	-
15	532196105	SPRING	1	-
16	584825501	HOSE ASSY *For all except 96766570100, 96795380400, 97045880101 & 97072990500*	1	-
16	532148456	TUBE *For 96766570100, 96795380400, 97045880101 & 97072990500*	1	-
17	539101363	CLAMP *For all except 96766570100, 96795380400, 97045880101 & 97072990500*	1	-
18	522599001	ADAPTER *For all except 96766570100, 96795380400, 97045880101 & 97072990500*	1	-
19	585807101	PLUG *For all except 96766570100, 96795380400, 97045880101 & 97072990500*	1	-
20	501603701	BEARING	2	-
21	582539501	BOLT	1	-
22	874520656	BOLT	1	-
23	872140506	BOLT *For 970458801-01, 970458801-00*	2	-
23	539990208	SCREW *For 96766570300, 967953801-01*	2	-
24	872140508	BOLT *For 970458801-01, 970458801-00*	2	-
24	539990316	BOLT *For 96766570300, 967953801-01*	2	-
25	581332803	BOLT	1	-
26	817490410	SCREW *For all except 96766570100, 96795380400, 97045880101 & 97072990500*	1	-
27	539976949	BOLT *For 970458801-01, 970458801-00*	1	-
27	874780620	BOLT *For 96766570300, 967953801-01*	4	-
28	817490512	SCREW	4	-
29	521991101	NUT	1	-
30	539112899	NUT, 5/16-18, NYLOC	5	-

Ref.	Article N.	Description	Qty	Kit
31	539976979	NUT	2	-
32	539990692	WASHER	2	-
33	532126197	WASHER	1	-
34	810030600	WASHER *For 970458801-01, 970458801-00*	4	-
34	539990118	WASHER *For 96766570300, 967953801-01*	4	-
35	532178151	GASKET	2	-
36	532184362	NUT	4	-
41	522598601	WIRING ASSY *KAWASAKI ENG ONLY*	1	-
42	589543901	INSTRUCTION *NOT SHOWN*	1	-
1	585522801	CONSOLE ASSY	1	-
1	598602606	CONSOLE ASSY *For 96795380400*	1	-
2	586621201	CONSOLE ASSY	1	-
2	586621203	CONSOLE ASSY *For 96795380400*	1	-
3	589924705	FUEL TANK ASSY *Fits 2.75 filler neck*	1	-
3	531016702	FUEL TANK ASSY *For 96795380400*	1	-
4	529989702	CAP *Fits 2.00 filler neck*	1	-
4	585124801	FUEL CAP ASSY *Fits 2.75 filler neck*	1	-
5	539112438	THROTTLE CABLE	1	-
6	586881501	CHOKE CONTROL ASSY	1	-
7	539107541	IGNITION SWITCH	1	-
8	582107602	SWITCH	1	-
9	587601501	SWITCH	2	-
10	539133049	KNOB	1	-
11	585522701	CONTROL PANEL	1	-
11	585522709	CONTROL PANEL *For 96795380400*	1	-
12	532123899	BATTERY *Round Terminal (B)*	1	-
12	579411601	BATTERY *Square Terminal (A)*	1	-
13	510030003	BRACKET	1	-

Ref.	Article N.	Description	Qty	Kit
14	582609602	BOX	1	-
15	532131563	COVER	3	-
16	539102759	INSULATOR	1	-
17	576618101	TANK VENT	1	-
18	539916325	VALVE	1	-
19	586123906	FUEL HOSE	1	-
20	582042801	SOLENOID	1	-
21	587198601	HARNESS	1	-
22	587044550	HOSE	1	-
23	587044810	HOSE	1	-
24	587044818	HOSE	1	-
25	532123487	HOSE CLAMP	4	-
26	532003645	BUSHING	1	-
27	532437492	GROMMET	1	-
28	532139277	NIPPLE	1	-
29	586161801	HOUR METER	1	-
30	532140401	KEY	1	-
31	586108201	HARNESS	1	-
32	588839401	HOOK	2	-
33	545227101	SCREW	2	-
34	539111229	SCREW	1	-
35	532141841	SCREW	2	-
36	586936001	SCREW *For 970458801-01, 970458801-00*	2	-
36	574822701	SCREW *For 96766570300, 967953801-01*	2	-
37	539990645	BOLT	2	-
38	595901601	BOLT *Square Terminal (A)*	2	-
38	872140506	BOLT *For 970458801-01, 970458801-00*	2	-
38	874760412	BOLT *Round Terminal (B) For 96766570300, 967953801-01*	2	-
39	817490408	SCREW	2	-
40	594944401	NUT *Square Terminal (A)*	2	-
40	596133601	LOCK NUT *Round Terminal (B) For 96766570300, 967953801-01*	2	-
40	539112899	NUT, 5/16-18, NYLOC *For 970458801-01, 970458801-00*	2	-

Ref.	Article N.	Description	Qty	Kit
41	521996501	NUT	2	-
42	539976978	NUT	5	-
48	586337301	HARNESS *NOT SHOWN*	1	-
49	532109748	RELAY *NOT SHOWN*	1	-
50	586548101	HARNESS	1	-
51	505280001	TIE WRAP	1	-
1	587623101	SHAFT ASSY *For 970458801-01, 970458801-00*	1	-
1	586429702	SHAFT ASSY *For 96766570300, 967953801-01*	1	-
2	586457101	LINK	1	-
3	586457201	LINK	2	-
4	587622901	LIFTING LEVER ASSY *For 970458801-01, 970458801-00*	1	-
4	586428701	HANDLE *For 96766570300, 967953801-01*	1	-
5	580486101	SPACER	2	-
6	585682102	BRACKET	2	-
7	525847201	LINK	2	-
8	580962301	GRIP	1	-
9	586867601	SPRING	1	-
10	532196314	SPRING *For 970458801-01, 970458801-00*	1	-
11	532195161	STUD	1	-
12	587225301	PIN *For 970458801-01, 970458801-00*	2	-
13	532196314	SPRING *For 970458801-01, 970458801-00*	1	-
13	532194209	SPRING *For 96766570300, 967953801-01*	4	-
14	587225301	PIN *For 970458801-01, 970458801-00*	4	-
14	532194208	PIN *For 96766570300, 967953801-01*	4	-
15	510184901	BUSHING	2	-
16	585701401	PIN	2	-
17	586457501	BELLCRANK	2	-
18	586457401	BELLCRANK	1	-
19	585682001	ROD	1	-

Ref.	Article N.	Description	Qty	Kit
20	532137729	SCREW	2	-
21	586561301	SCREW	2	-
22	532175994	NUT	1	-
23	812000002	RETAINER RING	1	-
24	819131316	WASHER	1	-
25	587623001	LINK ASSY *For 970458801-01, 970458801-00*	2	-
25	522858601	LINK ASSY *For 96766570300, 967953801-01*	2	-
26	539112899	NUT, 5/16-18, NYLOC	2	-
27	819212113	WASHER	2	-
28	532445060	LEVER *For 970458801-01, 970458801-00*	1	-
29	539118762	SPRING *For 970458801-01, 970458801-00*	1	-
1	597658101	SEAT *For 96795380100, 96795380200, 96795380300,*	1	-
1	536178101	SEAT *For 96795380400, 967665704, 970729905*	1	-
1	532406625	SEAT *For 967271801*	1	-
1	532439822	SEAT *For 967271802, 967271901, 967324403, 967665701*	1	-
1	597658102	SEAT *For 970458801*	1	-
1	536178103	SEAT *For 97045880101*	1	-
2	596992703	BRACKET	1	-
2	596768801	MODULE *Seat Pan For 967271801, 967271802, 967271901, 967324403, 967665701, 970458801*	1	-
2	598001601	SERVICE KIT *Seat Pan For 967665704, 970729905*	1	-
3	586220802	SUPPORT PLATE	1	-
4	586221202	PLATE	1	-
5	589481206	PLATE	1	-
6	580308202	SUPPORT	2	-
8	589483501	SPRING	2	-
9	532192749	SWITCH	1	-
11	586428601	SUPPORT LEG	1	-
12	585989301	BUMPER	2	-

Ref.	Article N.	Description	Qty	Kit
13	539104763	CLIP	5	-
14	539990316	BOLT	4	-
15	510422701	SCREW	2	-
16	874780620	BOLT	2	-
17	582478702	BUMPER	1	-
18	539110303	BOLT	2	-
19	874490512	BOLT	4	-
20	817000510	BOLT	6	-
21	539112899	NUT, 5/16-18, NYLOC	4	-
22	873900400	NUT	2	-
23	819141614	WASHER	1	-
24	590899903	BRACKET	2	-
25	589028501	SCREW	1	-
26	539102587	ABSORBER	1	-
27	597658203	SERVICE KIT	1	-
28	597959401	COVER	1	-
1	546963201	WHEEL ASSY *Fits 970729905*	2	-
1	590486701	WHEEL *FITS 967271801, 967271802, 967271901, 967665701, 970458801*	2	-
1	538672601	WHEEL *Fits 967665704, 967324403*	2	-
2	590486802	WHEEL *Fits 967271802*	2	-
2	595910102	WHEEL ASSY *Fits 970729905*	2	-
2	576588602	WHEEL ASSY *Fits 967665704, 967324403, 967665701, 967271801, 967271901, 970458801*	2	-
3	586650310	YOKE *Fits 970729905*	2	-
3	586650302	YOKE *Fits 967665704, 967324403, 967665701, 967271801, 967271901, 970458801*	2	-
3	510186505	YOKE *Fits 967271802*	2	-
4	539115638	FITTING *Fits 967271801, 967271802, 967324403*	2	-
4	596623501	VALVE *Fits 967665704, 970729905, 967665701, 970458801, 967271901*	2	-
5	539103300	NIPPLE *NIPPLIE*	2	-
6	539112660	BEARING	2	-

Ref.	Article N.	Description	Qty	Kit
		BEARING		
7	539117901	BLADE BUSHING *BUSHING*	2	-
8	539102535	CAP *CAP*	2	-
9	539115749	PLUG *PLUG*	2	-
10	585995401	SPACER *SPACER*	2	-
11	539115747	SPRING *SPRING*	2	-
12	874950516	SCREW *SCREW*	2	-
13	576601503	SCREW *SCREW*	2	-
14	521991103	NUT *NUT*	2	-
15	587653902	NUT *NUT*	8	-
16	539115675	WASHER *WASHER*	2	-
17	819182212	WASHER *WASHER*	2	-
1	597658101	SEAT *For 96795380100, 96795380200, 96795380300*	1	-
1	536178101	SEAT *For 96795380400, 967665704, 970729905*	1	-
1	532406625	SEAT *For 967271801*	1	-
1	532439822	SEAT *For 967271802, 967271901, 967324403, 967665701*	1	-
1	597658102	SEAT *For 970458801*	1	-
2	597330002	BRACKET	1	-
2	598001601	SERVICE KIT *For 967665704, 970729905*	1	-
2	596768801	MODULE *For 967271801, 967271802, 967271901, 967324403, 967665701, 970458801*	1	-
3	586220802	SUPPORT PLATE	1	-
4	586221202	PLATE	1	-
5	597160003	PLATE	1	-
6	580308202	SUPPORT	1	-

Ref.	Article N.	Description	Qty	Kit
7	590777602	BRACKET	1	-
8	596240701	BOLT	2	-
9	532192749	SWITCH	1	-
10	594944401	NUT	2	-
11	586428601	SUPPORT LEG	1	-
12	585989301	BUMPER	2	-
13	539104763	CLIP	5	-
14	539990316	BOLT	4	-
15	510422701	SCREW	2	-
16	521996502	NUT	2	-
17	597781801	BOLT	2	-
18	597553401	BUMPER	2	-
19	874490512	BOLT	4	-
20	817000510	BOLT	6	-
21	597783101	KNOB	2	-
22	598001601	SERVICE KIT	1	-
22	597298202	BRACKET *Fits 967665703-00*	1	-
23	597658203	SERVICE KIT	1	-
24	597959401	COVER	1	-
25	539112899	NUT, 5/16-18, NYLOC	4	-
26	597869301	BOLT	2	-

MOWER LIFT \/ DECK LIFT

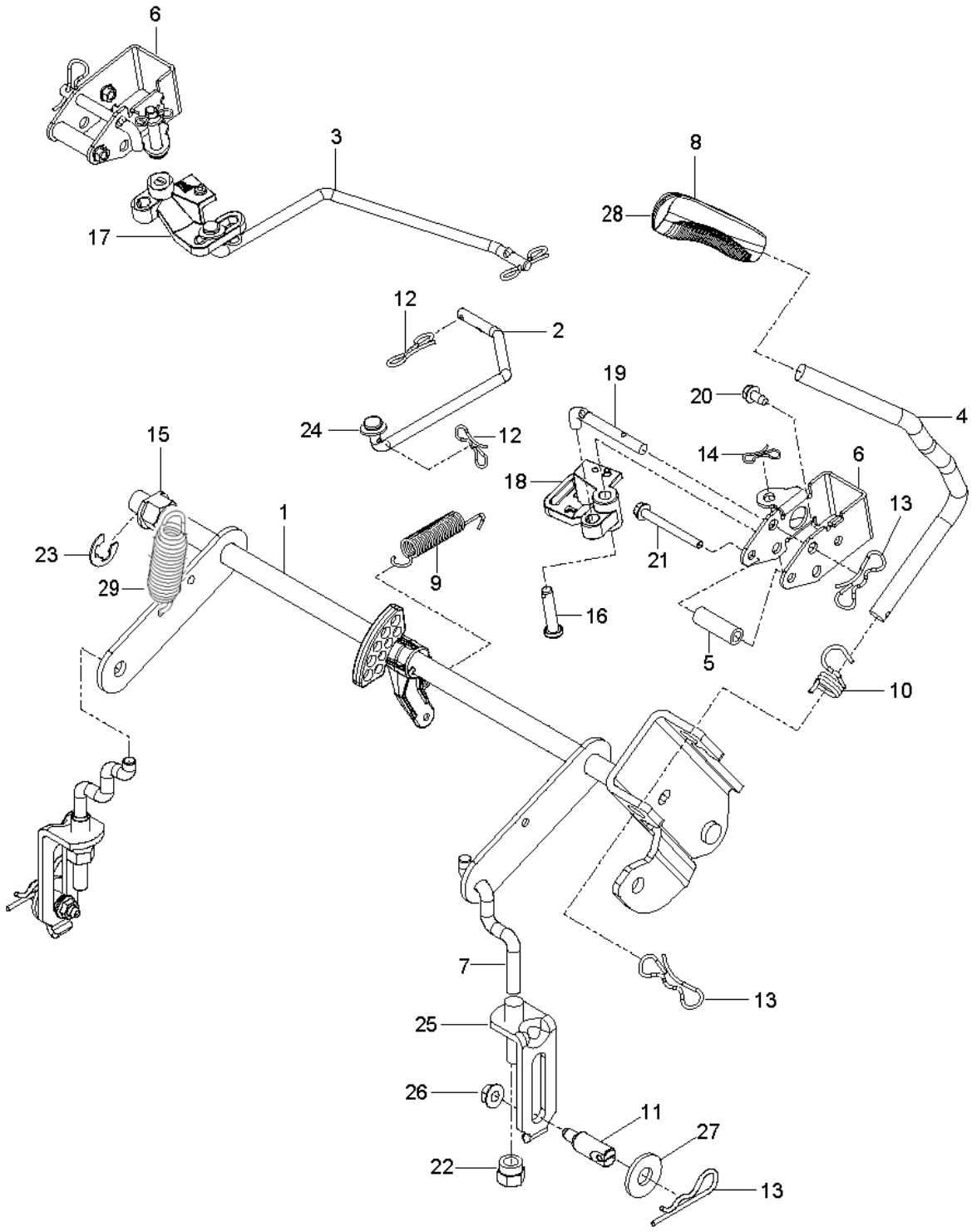

Ref.	Article N.	Description	Qty	Kit
1	587595601	DECAL	1	-
2	587595501	DECAL	1	-
3	587769201	DECAL	2	-
3	587769202	DECAL *Z242F SPECIAL EDITION SIDE RAIL DECAL*	1	-
4	539105745	DECAL	1	-

Ref.	Article N.	Description	Qty	Kit
5	532428677	DECAL	1	-
6	539108385	DECAL	1	-
6	585142401	DECAL *For 970458801, FRENCH*	1	-
7	539108386	DECAL	1	-
8	539109897	DECAL	1	-
8	585142501	DECAL *For 970458801, FRENCH*	1	-
9	590485501	DECAL	1	-
9	598655402	DECAL *For 970458801, FRENCH*	1	-
9	537449102	DECAL *STARTING INSTRUCTIONS FRENCH 97072990500*	1	-
10	532423829	DECAL	1	-
11	588035101	DECAL	1	-
12	586978801	DECAL	1	-
13	577469001	DECAL	2	-
14	510240201	DECAL	1	-
15	589357901	DECAL	2	-
16	501082601	DECAL *For 970458801-01, 970458801-00*	1	-
16	591357301	DECAL *For 96766570300, 967953801-01*	1	-
17	581724102	DECAL	1	-
18	587000701	PAD *For 96766570300, 967953801-01*	1	-
18	593363001	DECAL *For 970458801-01, 970458801-00*	1	-
19	592898301	DECAL *For 96766570300, 967953801-01*	1	-
20	590884901	DECAL *For 96766570300, 967953801-01*	1	-
21	536831101	DECAL *For 96795380400, 96795380400 RH Park Brake Decal*	1	-
22	536831102	DECAL *For 96795380400, 96795380400 LH Park Brake Decal*	1	-
1	593898602	PLATE	1	-
2	587241601	CLUTCH	1	-
3	583955701	TUBE	1	-
4	583955601	TUBE	1	-
5	581886702	BRACKET	1	-

Ref.	Article N.	Description	Qty	Kit
6	532448145	ARM	1	-
7	582538901	SPINDLE	1	-
8	532193197	PULLEY	1	-
9	587537401	PULLEY	1	-
10	587660101	SPACER	1	-
11	539132859	HEAT SHIELD	1	-
12	587633302	STOP	1	-
13	587451202	GUARD	1	-
14	539131604	MUFFLER ASSY	1	-
15	532196105	SPRING	1	-
16	584825501	HOSE ASSY *For all except 96766570100, 96795380400, 97045880101 & 97072990500*	1	-
16	532148456	TUBE *For 96766570100, 96795380400, 97045880101 & 97072990500*	1	-
17	539101363	CLAMP *For all except 96766570100, 96795380400, 97045880101 & 97072990500*	1	-
18	522599001	ADAPTER *For all except 96766570100, 96795380400, 97045880101 & 97072990500*	1	-
19	585807101	PLUG *For all except 96766570100, 96795380400, 97045880101 & 97072990500*	1	-
20	501603701	BEARING	2	-
21	582539501	BOLT	1	-
22	874520656	BOLT	1	-
23	872140506	BOLT *For 970458801-01, 970458801-00*	2	-
23	539990208	SCREW *For 96766570300, 967953801-01*	2	-
24	872140508	BOLT *For 970458801-01, 970458801-00*	2	-
24	539990316	BOLT *For 96766570300, 967953801-01*	2	-
25	581332803	BOLT	1	-
26	817490410	SCREW *For all except 96766570100, 96795380400, 97045880101 & 97072990500*	1	-
27	539976949	BOLT *For 970458801-01, 970458801-00*	1	-
27	874780620	BOLT *For 96766570300, 967953801-01*	4	-
28	817490512	SCREW	4	-
29	521991101	NUT	1	-
30	539112899	NUT, 5/16-18, NYLOC	5	-

Ref.	Article N.	Description	Qty	Kit
31	539976979	NUT	2	-
32	539990692	WASHER	2	-
33	532126197	WASHER	1	-
34	810030600	WASHER *For 970458801-01, 970458801-00*	4	-
34	539990118	WASHER *For 96766570300, 967953801-01*	4	-
35	532178151	GASKET	2	-
36	532184362	NUT	4	-
41	522598601	WIRING ASSY *KAWASAKI ENG ONLY*	1	-
42	589543901	INSTRUCTION *NOT SHOWN*	1	-
1	585522801	CONSOLE ASSY	1	-
1	598602606	CONSOLE ASSY *For 96795380400*	1	-
2	586621201	CONSOLE ASSY	1	-
2	586621203	CONSOLE ASSY *For 96795380400*	1	-
3	589924705	FUEL TANK ASSY *Fits 2.75 filler neck*	1	-
3	531016702	FUEL TANK ASSY *For 96795380400*	1	-
4	529989702	CAP *Fits 2.00 filler neck*	1	-
4	585124801	FUEL CAP ASSY *Fits 2.75 filler neck*	1	-
5	539112438	THROTTLE CABLE	1	-
6	586881501	CHOKE CONTROL ASSY	1	-
7	539107541	IGNITION SWITCH	1	-
8	582107602	SWITCH	1	-
9	587601501	SWITCH	2	-
10	539133049	KNOB	1	-
11	585522701	CONTROL PANEL	1	-
11	585522709	CONTROL PANEL *For 96795380400*	1	-
12	532123899	BATTERY *Round Terminal (B)*	1	-
12	579411601	BATTERY *Square Terminal (A)*	1	-
13	510030003	BRACKET	1	-

Ref.	Article N.	Description	Qty	Kit
14	582609602	BOX	1	-
15	532131563	COVER	3	-
16	539102759	INSULATOR	1	-
17	576618101	TANK VENT	1	-
18	539916325	VALVE	1	-
19	586123906	FUEL HOSE	1	-
20	582042801	SOLENOID	1	-
21	587198601	HARNESS	1	-
22	587044550	HOSE	1	-
23	587044810	HOSE	1	-
24	587044818	HOSE	1	-
25	532123487	HOSE CLAMP	4	-
26	532003645	BUSHING	1	-
27	532437492	GROMMET	1	-
28	532139277	NIPPLE	1	-
29	586161801	HOUR METER	1	-
30	532140401	KEY	1	-
31	586108201	HARNESS	1	-
32	588839401	HOOK	2	-
33	545227101	SCREW	2	-
34	539111229	SCREW	1	-
35	532141841	SCREW	2	-
36	586936001	SCREW *For 970458801-01, 970458801-00*	2	-
36	574822701	SCREW *For 96766570300, 967953801-01*	2	-
37	539990645	BOLT	2	-
38	595901601	BOLT *Square Terminal (A)*	2	-
38	872140506	BOLT *For 970458801-01, 970458801-00*	2	-
38	874760412	BOLT *Round Terminal (B) For 96766570300, 967953801-01*	2	-
39	817490408	SCREW	2	-
40	594944401	NUT *Square Terminal (A)*	2	-
40	596133601	LOCK NUT *Round Terminal (B) For 96766570300, 967953801-01*	2	-
40	539112899	NUT, 5/16-18, NYLOC *For 970458801-01, 970458801-00*	2	-

Ref.	Article N.	Description	Qty	Kit
41	521996501	NUT	2	-
42	539976978	NUT	5	-
48	586337301	HARNESS *NOT SHOWN*	1	-
49	532109748	RELAY *NOT SHOWN*	1	-
50	586548101	HARNESS	1	-
51	505280001	TIE WRAP	1	-
1	587623101	SHAFT ASSY *For 970458801-01, 970458801-00*	1	-
1	586429702	SHAFT ASSY *For 96766570300, 967953801-01*	1	-
2	586457101	LINK	1	-
3	586457201	LINK	2	-
4	587622901	LIFTING LEVER ASSY *For 970458801-01, 970458801-00*	1	-
4	586428701	HANDLE *For 96766570300, 967953801-01*	1	-
5	580486101	SPACER	2	-
6	585682102	BRACKET	2	-
7	525847201	LINK	2	-
8	580962301	GRIP	1	-
9	586867601	SPRING	1	-
10	532196314	SPRING *For 970458801-01, 970458801-00*	1	-
11	532195161	STUD	1	-
12	587225301	PIN *For 970458801-01, 970458801-00*	2	-
13	532196314	SPRING *For 970458801-01, 970458801-00*	1	-
13	532194209	SPRING *For 96766570300, 967953801-01*	4	-
14	587225301	PIN *For 970458801-01, 970458801-00*	4	-
14	532194208	PIN *For 96766570300, 967953801-01*	4	-
15	510184901	BUSHING	2	-
16	585701401	PIN	2	-
17	586457501	BELLCRANK	2	-
18	586457401	BELLCRANK	1	-
19	585682001	ROD	1	-

Ref.	Article N.	Description	Qty	Kit
20	532137729	SCREW	2	-
21	586561301	SCREW	2	-
22	532175994	NUT	1	-
23	812000002	RETAINER RING	1	-
24	819131316	WASHER	1	-
25	587623001	LINK ASSY *For 970458801-01, 970458801-00*	2	-
25	522858601	LINK ASSY *For 96766570300, 967953801-01*	2	-
26	539112899	NUT, 5/16-18, NYLOC	2	-
27	819212113	WASHER	2	-
28	532445060	LEVER *For 970458801-01, 970458801-00*	1	-
29	539118762	SPRING *For 970458801-01, 970458801-00*	1	-
1	597658101	SEAT *For 96795380100, 96795380200, 96795380300,*	1	-
1	536178101	SEAT *For 96795380400, 967665704, 970729905*	1	-
1	532406625	SEAT *For 967271801*	1	-
1	532439822	SEAT *For 967271802, 967271901, 967324403, 967665701*	1	-
1	597658102	SEAT *For 970458801*	1	-
1	536178103	SEAT *For 97045880101*	1	-
2	596992703	BRACKET	1	-
2	596768801	MODULE *Seat Pan For 967271801, 967271802, 967271901, 967324403, 967665701, 970458801*	1	-
2	598001601	SERVICE KIT *Seat Pan For 967665704, 970729905*	1	-
3	586220802	SUPPORT PLATE	1	-
4	586221202	PLATE	1	-
5	589481206	PLATE	1	-
6	580308202	SUPPORT	2	-
8	589483501	SPRING	2	-
9	532192749	SWITCH	1	-
11	586428601	SUPPORT LEG	1	-
12	585989301	BUMPER	2	-

Ref.	Article N.	Description	Qty	Kit
13	539104763	CLIP	5	-
14	539990316	BOLT	4	-
15	510422701	SCREW	2	-
16	874780620	BOLT	2	-
17	582478702	BUMPER	1	-
18	539110303	BOLT	2	-
19	874490512	BOLT	4	-
20	817000510	BOLT	6	-
21	539112899	NUT, 5/16-18, NYLOC	4	-
22	873900400	NUT	2	-
23	819141614	WASHER	1	-
24	590899903	BRACKET	2	-
25	589028501	SCREW	1	-
26	539102587	ABSORBER	1	-
27	597658203	SERVICE KIT	1	-
28	597959401	COVER	1	-
1	546963201	WHEEL ASSY *Fits 970729905*	2	-
1	590486701	WHEEL *FITS 967271801, 967271802, 967271901, 967665701, 970458801*	2	-
1	538672601	WHEEL *Fits 967665704, 967324403*	2	-
2	590486802	WHEEL *Fits 967271802*	2	-
2	595910102	WHEEL ASSY *Fits 970729905*	2	-
2	576588602	WHEEL ASSY *Fits 967665704, 967324403, 967665701, 967271801, 967271901, 970458801*	2	-
3	586650310	YOKE *Fits 970729905*	2	-
3	586650302	YOKE *Fits 967665704, 967324403, 967665701, 967271801, 967271901, 970458801*	2	-
3	510186505	YOKE *Fits 967271802*	2	-
4	539115638	FITTING *Fits 967271801, 967271802, 967324403*	2	-
4	596623501	VALVE *Fits 967665704, 970729905, 967665701, 970458801, 967271901*	2	-
5	539103300	NIPPLE *NIPPLIE*	2	-
6	539112660	BEARING	2	-

Ref.	Article N.	Description	Qty	Kit
		BEARING		
7	539117901	BLADE BUSHING *BUSHING*	2	-
8	539102535	CAP *CAP*	2	-
9	539115749	PLUG *PLUG*	2	-
10	585995401	SPACER *SPACER*	2	-
11	539115747	SPRING *SPRING*	2	-
12	874950516	SCREW *SCREW*	2	-
13	576601503	SCREW *SCREW*	2	-
14	521991103	NUT *NUT*	2	-
15	587653902	NUT *NUT*	8	-
16	539115675	WASHER *WASHER*	2	-
17	819182212	WASHER *WASHER*	2	-
1	597658101	SEAT *For 96795380100, 96795380200, 96795380300*	1	-
1	536178101	SEAT *For 96795380400, 967665704, 970729905*	1	-
1	532406625	SEAT *For 967271801*	1	-
1	532439822	SEAT *For 967271802, 967271901, 967324403, 967665701*	1	-
1	597658102	SEAT *For 970458801*	1	-
2	597330002	BRACKET	1	-
2	598001601	SERVICE KIT *For 967665704, 970729905*	1	-
2	596768801	MODULE *For 967271801, 967271802, 967271901, 967324403, 967665701, 970458801*	1	-
3	586220802	SUPPORT PLATE	1	-
4	586221202	PLATE	1	-
5	597160003	PLATE	1	-
6	580308202	SUPPORT	1	-

Ref.	Article N.	Description	Qty	Kit
7	590777602	BRACKET	1	-
8	596240701	BOLT	2	-
9	532192749	SWITCH	1	-
10	594944401	NUT	2	-
11	586428601	SUPPORT LEG	1	-
12	585989301	BUMPER	2	-
13	539104763	CLIP	5	-
14	539990316	BOLT	4	-
15	510422701	SCREW	2	-
16	521996502	NUT	2	-
17	597781801	BOLT	2	-
18	597553401	BUMPER	2	-
19	874490512	BOLT	4	-
20	817000510	BOLT	6	-
21	597783101	KNOB	2	-
22	598001601	SERVICE KIT	1	-
22	597298202	BRACKET *Fits 967665703-00*	1	-
23	597658203	SERVICE KIT	1	-
24	597959401	COVER	1	-
25	539112899	NUT, 5/16-18, NYLOC	4	-
26	597869301	BOLT	2	-

SEAT

For 96766570300, 970458801-00

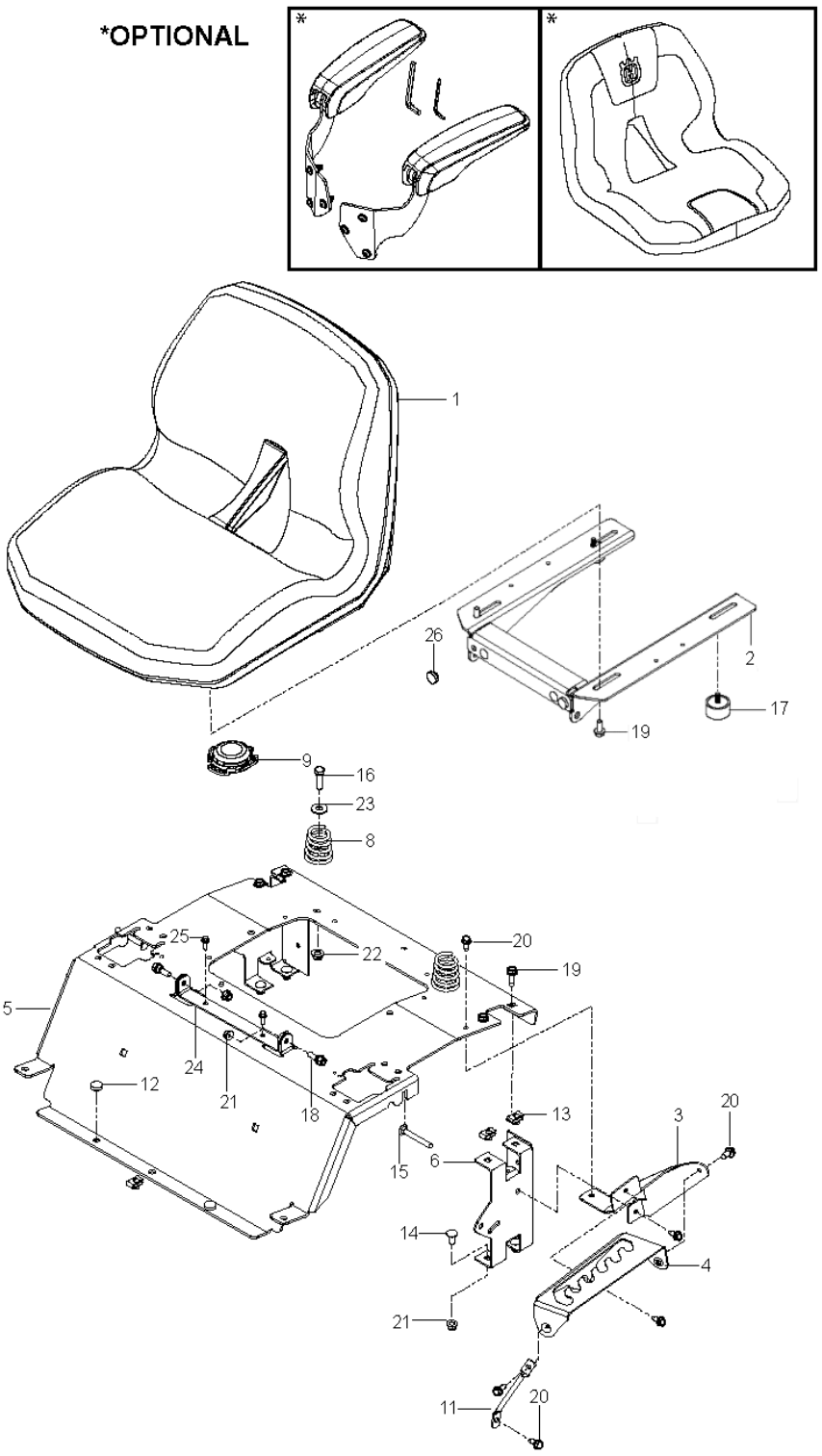

Ref.	Article N.	Description	Qty	Kit
1	587595601	DECAL	1	-
2	587595501	DECAL	1	-
3	587769201	DECAL	2	-
3	587769202	DECAL *Z242F SPECIAL EDITION SIDE RAIL DECAL*	1	-
4	539105745	DECAL	1	-

Ref.	Article N.	Description	Qty	Kit
5	532428677	DECAL	1	-
6	539108385	DECAL	1	-
6	585142401	DECAL *For 970458801, FRENCH*	1	-
7	539108386	DECAL	1	-
8	539109897	DECAL	1	-
8	585142501	DECAL *For 970458801, FRENCH*	1	-
9	590485501	DECAL	1	-
9	598655402	DECAL *For 970458801, FRENCH*	1	-
9	537449102	DECAL *STARTING INSTRUCTIONS FRENCH 97072990500*	1	-
10	532423829	DECAL	1	-
11	588035101	DECAL	1	-
12	586978801	DECAL	1	-
13	577469001	DECAL	2	-
14	510240201	DECAL	1	-
15	589357901	DECAL	2	-
16	501082601	DECAL *For 970458801-01, 970458801-00*	1	-
16	591357301	DECAL *For 96766570300, 967953801-01*	1	-
17	581724102	DECAL	1	-
18	587000701	PAD *For 96766570300, 967953801-01*	1	-
18	593363001	DECAL *For 970458801-01, 970458801-00*	1	-
19	592898301	DECAL *For 96766570300, 967953801-01*	1	-
20	590884901	DECAL *For 96766570300, 967953801-01*	1	-
21	536831101	DECAL *For 96795380400, 96795380400 RH Park Brake Decal*	1	-
22	536831102	DECAL *For 96795380400, 96795380400 LH Park Brake Decal*	1	-
1	593898602	PLATE	1	-
2	587241601	CLUTCH	1	-
3	583955701	TUBE	1	-
4	583955601	TUBE	1	-
5	581886702	BRACKET	1	-

Ref.	Article N.	Description	Qty	Kit
6	532448145	ARM	1	-
7	582538901	SPINDLE	1	-
8	532193197	PULLEY	1	-
9	587537401	PULLEY	1	-
10	587660101	SPACER	1	-
11	539132859	HEAT SHIELD	1	-
12	587633302	STOP	1	-
13	587451202	GUARD	1	-
14	539131604	MUFFLER ASSY	1	-
15	532196105	SPRING	1	-
16	584825501	HOSE ASSY *For all except 96766570100, 96795380400, 97045880101 & 97072990500*	1	-
16	532148456	TUBE *For 96766570100, 96795380400, 97045880101 & 97072990500*	1	-
17	539101363	CLAMP *For all except 96766570100, 96795380400, 97045880101 & 97072990500*	1	-
18	522599001	ADAPTER *For all except 96766570100, 96795380400, 97045880101 & 97072990500*	1	-
19	585807101	PLUG *For all except 96766570100, 96795380400, 97045880101 & 97072990500*	1	-
20	501603701	BEARING	2	-
21	582539501	BOLT	1	-
22	874520656	BOLT	1	-
23	872140506	BOLT *For 970458801-01, 970458801-00*	2	-
23	539990208	SCREW *For 96766570300, 967953801-01*	2	-
24	872140508	BOLT *For 970458801-01, 970458801-00*	2	-
24	539990316	BOLT *For 96766570300, 967953801-01*	2	-
25	581332803	BOLT	1	-
26	817490410	SCREW *For all except 96766570100, 96795380400, 97045880101 & 97072990500*	1	-
27	539976949	BOLT *For 970458801-01, 970458801-00*	1	-
27	874780620	BOLT *For 96766570300, 967953801-01*	4	-
28	817490512	SCREW	4	-
29	521991101	NUT	1	-
30	539112899	NUT, 5/16-18, NYLOC	5	-

Ref.	Article N.	Description	Qty	Kit
31	539976979	NUT	2	-
32	539990692	WASHER	2	-
33	532126197	WASHER	1	-
34	810030600	WASHER *For 970458801-01, 970458801-00*	4	-
34	539990118	WASHER *For 96766570300, 967953801-01*	4	-
35	532178151	GASKET	2	-
36	532184362	NUT	4	-
41	522598601	WIRING ASSY *KAWASAKI ENG ONLY*	1	-
42	589543901	INSTRUCTION *NOT SHOWN*	1	-
1	585522801	CONSOLE ASSY	1	-
1	598602606	CONSOLE ASSY *For 96795380400*	1	-
2	586621201	CONSOLE ASSY	1	-
2	586621203	CONSOLE ASSY *For 96795380400*	1	-
3	589924705	FUEL TANK ASSY *Fits 2.75 filler neck*	1	-
3	531016702	FUEL TANK ASSY *For 96795380400*	1	-
4	529989702	CAP *Fits 2.00 filler neck*	1	-
4	585124801	FUEL CAP ASSY *Fits 2.75 filler neck*	1	-
5	539112438	THROTTLE CABLE	1	-
6	586881501	CHOKE CONTROL ASSY	1	-
7	539107541	IGNITION SWITCH	1	-
8	582107602	SWITCH	1	-
9	587601501	SWITCH	2	-
10	539133049	KNOB	1	-
11	585522701	CONTROL PANEL	1	-
11	585522709	CONTROL PANEL *For 96795380400*	1	-
12	532123899	BATTERY *Round Terminal (B)*	1	-
12	579411601	BATTERY *Square Terminal (A)*	1	-
13	510030003	BRACKET	1	-

Ref.	Article N.	Description	Qty	Kit
14	582609602	BOX	1	-
15	532131563	COVER	3	-
16	539102759	INSULATOR	1	-
17	576618101	TANK VENT	1	-
18	539916325	VALVE	1	-
19	586123906	FUEL HOSE	1	-
20	582042801	SOLENOID	1	-
21	587198601	HARNESS	1	-
22	587044550	HOSE	1	-
23	587044810	HOSE	1	-
24	587044818	HOSE	1	-
25	532123487	HOSE CLAMP	4	-
26	532003645	BUSHING	1	-
27	532437492	GROMMET	1	-
28	532139277	NIPPLE	1	-
29	586161801	HOUR METER	1	-
30	532140401	KEY	1	-
31	586108201	HARNESS	1	-
32	588839401	HOOK	2	-
33	545227101	SCREW	2	-
34	539111229	SCREW	1	-
35	532141841	SCREW	2	-
36	586936001	SCREW *For 970458801-01, 970458801-00*	2	-
36	574822701	SCREW *For 96766570300, 967953801-01*	2	-
37	539990645	BOLT	2	-
38	595901601	BOLT *Square Terminal (A)*	2	-
38	872140506	BOLT *For 970458801-01, 970458801-00*	2	-
38	874760412	BOLT *Round Terminal (B) For 96766570300, 967953801-01*	2	-
39	817490408	SCREW	2	-
40	594944401	NUT *Square Terminal (A)*	2	-
40	596133601	LOCK NUT *Round Terminal (B) For 96766570300, 967953801-01*	2	-
40	539112899	NUT, 5/16-18, NYLOC *For 970458801-01, 970458801-00*	2	-

Ref.	Article N.	Description	Qty	Kit
41	521996501	NUT	2	-
42	539976978	NUT	5	-
48	586337301	HARNESS *NOT SHOWN*	1	-
49	532109748	RELAY *NOT SHOWN*	1	-
50	586548101	HARNESS	1	-
51	505280001	TIE WRAP	1	-
1	587623101	SHAFT ASSY *For 970458801-01, 970458801-00*	1	-
1	586429702	SHAFT ASSY *For 96766570300, 967953801-01*	1	-
2	586457101	LINK	1	-
3	586457201	LINK	2	-
4	587622901	LIFTING LEVER ASSY *For 970458801-01, 970458801-00*	1	-
4	586428701	HANDLE *For 96766570300, 967953801-01*	1	-
5	580486101	SPACER	2	-
6	585682102	BRACKET	2	-
7	525847201	LINK	2	-
8	580962301	GRIP	1	-
9	586867601	SPRING	1	-
10	532196314	SPRING *For 970458801-01, 970458801-00*	1	-
11	532195161	STUD	1	-
12	587225301	PIN *For 970458801-01, 970458801-00*	2	-
13	532196314	SPRING *For 970458801-01, 970458801-00*	1	-
13	532194209	SPRING *For 96766570300, 967953801-01*	4	-
14	587225301	PIN *For 970458801-01, 970458801-00*	4	-
14	532194208	PIN *For 96766570300, 967953801-01*	4	-
15	510184901	BUSHING	2	-
16	585701401	PIN	2	-
17	586457501	BELLCRANK	2	-
18	586457401	BELLCRANK	1	-
19	585682001	ROD	1	-

Ref.	Article N.	Description	Qty	Kit
20	532137729	SCREW	2	-
21	586561301	SCREW	2	-
22	532175994	NUT	1	-
23	812000002	RETAINER RING	1	-
24	819131316	WASHER	1	-
25	587623001	LINK ASSY *For 970458801-01, 970458801-00*	2	-
25	522858601	LINK ASSY *For 96766570300, 967953801-01*	2	-
26	539112899	NUT, 5/16-18, NYLOC	2	-
27	819212113	WASHER	2	-
28	532445060	LEVER *For 970458801-01, 970458801-00*	1	-
29	539118762	SPRING *For 970458801-01, 970458801-00*	1	-
1	597658101	SEAT *For 96795380100, 96795380200, 96795380300,*	1	-
1	536178101	SEAT *For 96795380400, 967665704, 970729905*	1	-
1	532406625	SEAT *For 967271801*	1	-
1	532439822	SEAT *For 967271802, 967271901, 967324403, 967665701*	1	-
1	597658102	SEAT *For 970458801*	1	-
1	536178103	SEAT *For 97045880101*	1	-
2	596992703	BRACKET	1	-
2	596768801	MODULE *Seat Pan For 967271801, 967271802, 967271901, 967324403, 967665701, 970458801*	1	-
2	598001601	SERVICE KIT *Seat Pan For 967665704, 970729905*	1	-
3	586220802	SUPPORT PLATE	1	-
4	586221202	PLATE	1	-
5	589481206	PLATE	1	-
6	580308202	SUPPORT	2	-
8	589483501	SPRING	2	-
9	532192749	SWITCH	1	-
11	586428601	SUPPORT LEG	1	-
12	585989301	BUMPER	2	-

Ref.	Article N.	Description	Qty	Kit
13	539104763	CLIP	5	-
14	539990316	BOLT	4	-
15	510422701	SCREW	2	-
16	874780620	BOLT	2	-
17	582478702	BUMPER	1	-
18	539110303	BOLT	2	-
19	874490512	BOLT	4	-
20	817000510	BOLT	6	-
21	539112899	NUT, 5/16-18, NYLOC	4	-
22	873900400	NUT	2	-
23	819141614	WASHER	1	-
24	590899903	BRACKET	2	-
25	589028501	SCREW	1	-
26	539102587	ABSORBER	1	-
27	597658203	SERVICE KIT	1	-
28	597959401	COVER	1	-
1	546963201	WHEEL ASSY *Fits 970729905*	2	-
1	590486701	WHEEL *FITS 967271801, 967271802, 967271901, 967665701, 970458801*	2	-
1	538672601	WHEEL *Fits 967665704, 967324403*	2	-
2	590486802	WHEEL *Fits 967271802*	2	-
2	595910102	WHEEL ASSY *Fits 970729905*	2	-
2	576588602	WHEEL ASSY *Fits 967665704, 967324403, 967665701, 967271801, 967271901, 970458801*	2	-
3	586650310	YOKE *Fits 970729905*	2	-
3	586650302	YOKE *Fits 967665704, 967324403, 967665701, 967271801, 967271901, 970458801*	2	-
3	510186505	YOKE *Fits 967271802*	2	-
4	539115638	FITTING *Fits 967271801, 967271802, 967324403*	2	-
4	596623501	VALVE *Fits 967665704, 970729905, 967665701, 970458801, 967271901*	2	-
5	539103300	NIPPLE *NIPPLIE*	2	-
6	539112660	BEARING	2	-

Ref.	Article N.	Description	Qty	Kit
		BEARING		
7	539117901	BLADE BUSHING *BUSHING*	2	-
8	539102535	CAP *CAP*	2	-
9	539115749	PLUG *PLUG*	2	-
10	585995401	SPACER *SPACER*	2	-
11	539115747	SPRING *SPRING*	2	-
12	874950516	SCREW *SCREW*	2	-
13	576601503	SCREW *SCREW*	2	-
14	521991103	NUT *NUT*	2	-
15	587653902	NUT *NUT*	8	-
16	539115675	WASHER *WASHER*	2	-
17	819182212	WASHER *WASHER*	2	-
1	597658101	SEAT *For 96795380100, 96795380200, 96795380300*	1	-
1	536178101	SEAT *For 96795380400, 967665704, 970729905*	1	-
1	532406625	SEAT *For 967271801*	1	-
1	532439822	SEAT *For 967271802, 967271901, 967324403, 967665701*	1	-
1	597658102	SEAT *For 970458801*	1	-
2	597330002	BRACKET	1	-
2	598001601	SERVICE KIT *For 967665704, 970729905*	1	-
2	596768801	MODULE *For 967271801, 967271802, 967271901, 967324403, 967665701, 970458801*	1	-
3	586220802	SUPPORT PLATE	1	-
4	586221202	PLATE	1	-
5	597160003	PLATE	1	-
6	580308202	SUPPORT	1	-

Ref.	Article N.	Description	Qty	Kit
7	590777602	BRACKET	1	-
8	596240701	BOLT	2	-
9	532192749	SWITCH	1	-
10	594944401	NUT	2	-
11	586428601	SUPPORT LEG	1	-
12	585989301	BUMPER	2	-
13	539104763	CLIP	5	-
14	539990316	BOLT	4	-
15	510422701	SCREW	2	-
16	521996502	NUT	2	-
17	597781801	BOLT	2	-
18	597553401	BUMPER	2	-
19	874490512	BOLT	4	-
20	817000510	BOLT	6	-
21	597783101	KNOB	2	-
22	598001601	SERVICE KIT	1	-
22	597298202	BRACKET *Fits 967665703-00*	1	-
23	597658203	SERVICE KIT	1	-
24	597959401	COVER	1	-
25	539112899	NUT, 5/16-18, NYLOC	4	-
26	597869301	BOLT	2	-

WHEELS AND TIRES

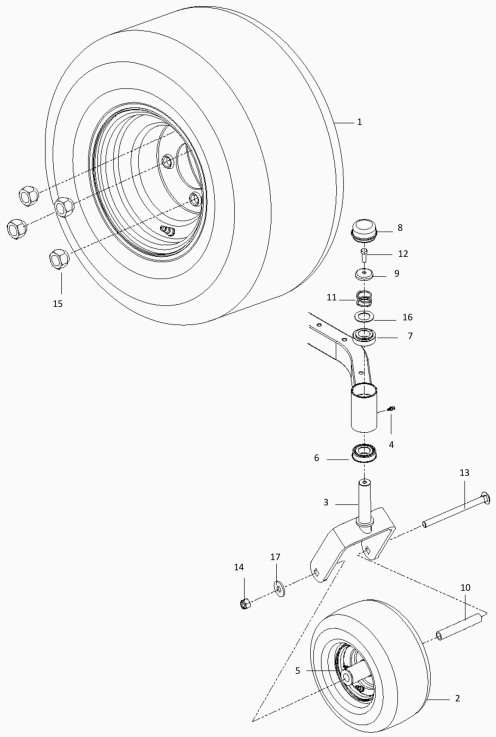

Ref.	Article N.	Description	Qty	Kit
1	587595601	DECAL	1	-
2	587595501	DECAL	1	-
3	587769201	DECAL	2	-
3	587769202	DECAL *Z242F SPECIAL EDITION SIDE RAIL DECAL*	1	-
4	539105745	DECAL	1	-
5	532428677	DECAL	1	-
6	539108385	DECAL	1	-
6	585142401	DECAL *For 970458801, FRENCH*	1	-
7	539108386	DECAL	1	-
8	539109897	DECAL	1	-
8	585142501	DECAL *For 970458801, FRENCH*	1	-
9	590485501	DECAL	1	-
9	598655402	DECAL *For 970458801, FRENCH*	1	-
9	537449102	DECAL *STARTING INSTRUCTIONS FRENCH 97072990500*	1	-
10	532423829	DECAL	1	-
11	588035101	DECAL	1	-
12	586978801	DECAL	1	-
13	577469001	DECAL	2	-

Ref.	Article N.	Description	Qty	Kit
14	510240201	DECAL	1	-
15	589357901	DECAL	2	-
16	501082601	DECAL *For 970458801-01, 970458801-00*	1	-
16	591357301	DECAL *For 96766570300, 967953801-01*	1	-
17	581724102	DECAL	1	-
18	587000701	PAD *For 96766570300, 967953801-01*	1	-
18	593363001	DECAL *For 970458801-01, 970458801-00*	1	-
19	592898301	DECAL *For 96766570300, 967953801-01*	1	-
20	590884901	DECAL *For 96766570300, 967953801-01*	1	-
21	536831101	DECAL *For 96795380400, 96795380400 RH Park Brake Decal*	1	-
22	536831102	DECAL *For 96795380400, 96795380400 LH Park Brake Decal*	1	-
1	593898602	PLATE	1	-
2	587241601	CLUTCH	1	-
3	583955701	TUBE	1	-
4	583955601	TUBE	1	-
5	581886702	BRACKET	1	-
6	532448145	ARM	1	-
7	582538901	SPINDLE	1	-
8	532193197	PULLEY	1	-
9	587537401	PULLEY	1	-
10	587660101	SPACER	1	-
11	539132859	HEAT SHIELD	1	-
12	587633302	STOP	1	-
13	587451202	GUARD	1	-
14	539131604	MUFFLER ASSY	1	-
15	532196105	SPRING	1	-
16	584825501	HOSE ASSY *For all except 96766570100, 96795380400, 97045880101 & 97072990500*	1	-
16	532148456	TUBE *For 96766570100, 96795380400, 97045880101 & 97072990500*	1	-
17	539101363	CLAMP *For all except 96766570100, 96795380400, 97045880101 & 97072990500*	1	-
18	522599001	ADAPTER	1	-

Ref.	Article N.	Description	Qty	Kit
		For all except 96766570100, 96795380400, 97045880101 & 97072990500		
19	585807101	PLUG *For all except 96766570100, 96795380400, 97045880101 & 97072990500*	1	-
20	501603701	BEARING	2	-
21	582539501	BOLT	1	-
22	874520656	BOLT	1	-
23	872140506	BOLT *For 970458801-01, 970458801-00*	2	-
23	539990208	SCREW *For 96766570300, 967953801-01*	2	-
24	872140508	BOLT *For 970458801-01, 970458801-00*	2	-
24	539990316	BOLT *For 96766570300, 967953801-01*	2	-
25	581332803	BOLT	1	-
26	817490410	SCREW *For all except 96766570100, 96795380400, 97045880101 & 97072990500*	1	-
27	539976949	BOLT *For 970458801-01, 970458801-00*	1	-
27	874780620	BOLT *For 96766570300, 967953801-01*	4	-
28	817490512	SCREW	4	-
29	521991101	NUT	1	-
30	539112899	NUT, 5/16-18, NYLOC	5	-
31	539976979	NUT	2	-
32	539990692	WASHER	2	-
33	532126197	WASHER	1	-
34	810030600	WASHER *For 970458801-01, 970458801-00*	4	-
34	539990118	WASHER *For 96766570300, 967953801-01*	4	-
35	532178151	GASKET	2	-
36	532184362	NUT	4	-
41	522598601	WIRING ASSY *KAWASAKI ENG ONLY*	1	-
42	589543901	INSTRUCTION *NOT SHOWN*	1	-
1	585522801	CONSOLE ASSY	1	-
1	598602606	CONSOLE ASSY *For 96795380400*	1	-
2	586621201	CONSOLE ASSY	1	-

Ref.	Article N.	Description	Qty	Kit
2	586621203	CONSOLE ASSY *For 96795380400*	1	-
3	589924705	FUEL TANK ASSY *Fits 2.75 filler neck*	1	-
3	531016702	FUEL TANK ASSY *For 96795380400*	1	-
4	529989702	CAP *Fits 2.00 filler neck*	1	-
4	585124801	FUEL CAP ASSY *Fits 2.75 filler neck*	1	-
5	539112438	THROTTLE CABLE	1	-
6	586881501	CHOKE CONTROL ASSY	1	-
7	539107541	IGNITION SWITCH	1	-
8	582107602	SWITCH	1	-
9	587601501	SWITCH	2	-
10	539133049	KNOB	1	-
11	585522701	CONTROL PANEL	1	-
11	585522709	CONTROL PANEL *For 96795380400*	1	-
12	532123899	BATTERY *Round Terminal (B)*	1	-
12	579411601	BATTERY *Square Terminal (A)*	1	-
13	510030003	BRACKET	1	-
14	582609602	BOX	1	-
15	532131563	COVER	3	-
16	539102759	INSULATOR	1	-
17	576618101	TANK VENT	1	-
18	539916325	VALVE	1	-
19	586123906	FUEL HOSE	1	-
20	582042801	SOLENOID	1	-
21	587198601	HARNESS	1	-
22	587044550	HOSE	1	-
23	587044810	HOSE	1	-
24	587044818	HOSE	1	-
25	532123487	HOSE CLAMP	4	-
26	532003645	BUSHING	1	-
27	532437492	GROMMET	1	-
28	532139277	NIPPLE	1	-
29	586161801	HOUR METER	1	-

Ref.	Article N.	Description	Qty	Kit
30	532140401	KEY	1	-
31	586108201	HARNESS	1	-
32	588839401	HOOK	2	-
33	545227101	SCREW	2	-
34	539111229	SCREW	1	-
35	532141841	SCREW	2	-
36	586936001	SCREW *For 970458801-01, 970458801-00*	2	-
36	574822701	SCREW *For 96766570300, 967953801-01*	2	-
37	539990645	BOLT	2	-
38	595901601	BOLT *Square Terminal (A)*	2	-
38	872140506	BOLT *For 970458801-01, 970458801-00*	2	-
38	874760412	BOLT *Round Terminal (B) For 96766570300, 967953801-01*	2	-
39	817490408	SCREW	2	-
40	594944401	NUT *Square Terminal (A)*	2	-
40	596133601	LOCK NUT *Round Terminal (B) For 96766570300, 967953801-01*	2	-
40	539112899	NUT, 5/16-18, NYLOC *For 970458801-01, 970458801-00*	2	-
41	521996501	NUT	2	-
42	539976978	NUT	5	-
48	586337301	HARNESS *NOT SHOWN*	1	-
49	532109748	RELAY *NOT SHOWN*	1	-
50	586548101	HARNESS	1	-
51	505280001	TIE WRAP	1	-
1	587623101	SHAFT ASSY *For 970458801-01, 970458801-00*	1	-
1	586429702	SHAFT ASSY *For 96766570300, 967953801-01*	1	-
2	586457101	LINK	1	-
3	586457201	LINK	2	-
4	587622901	LIFTING LEVER ASSY *For 970458801-01, 970458801-00*	1	-
4	586428701	HANDLE	1	-

Ref.	Article N.	Description	Qty	Kit
		For 96766570300, 967953801-01		
5	580486101	SPACER	2	-
6	585682102	BRACKET	2	-
7	525847201	LINK	2	-
8	580962301	GRIP	1	-
9	586867601	SPRING	1	-
10	532196314	SPRING *For 970458801-01, 970458801-00*	1	-
11	532195161	STUD	1	-
12	587225301	PIN *For 970458801-01, 970458801-00*	2	-
13	532196314	SPRING *For 970458801-01, 970458801-00*	1	-
13	532194209	SPRING *For 96766570300, 967953801-01*	4	-
14	587225301	PIN *For 970458801-01, 970458801-00*	4	-
14	532194208	PIN *For 96766570300, 967953801-01*	4	-
15	510184901	BUSHING	2	-
16	585701401	PIN	2	-
17	586457501	BELLCRANK	2	-
18	586457401	BELLCRANK	1	-
19	585682001	ROD	1	-
20	532137729	SCREW	2	-
21	586561301	SCREW	2	-
22	532175994	NUT	1	-
23	812000002	RETAINER RING	1	-
24	819131316	WASHER	1	-
25	587623001	LINK ASSY *For 970458801-01, 970458801-00*	2	-
25	522858601	LINK ASSY *For 96766570300, 967953801-01*	2	-
26	539112899	NUT, 5/16-18, NYLOC	2	-
27	819212113	WASHER	2	-
28	532445060	LEVER *For 970458801-01, 970458801-00*	1	-
29	539118762	SPRING *For 970458801-01, 970458801-00*	1	-
1	597658101	SEAT *For 96795380100, 96795380200, 96795380300,*	1	-

Ref.	Article N.	Description	Qty	Kit
1	536178101	SEAT *For 96795380400, 967665704, 970729905*	1	-
1	532406625	SEAT *For 967271801*	1	-
1	532439822	SEAT *For 967271802, 967271901, 967324403, 967665701*	1	-
1	597658102	SEAT *For 970458801*	1	-
1	536178103	SEAT *For 97045880101*	1	-
2	596992703	BRACKET	1	-
2	596768801	MODULE *Seat Pan For 967271801, 967271802, 967271901, 967324403, 967665701, 970458801*	1	-
2	598001601	SERVICE KIT *Seat Pan For 967665704, 970729905*	1	-
3	586220802	SUPPORT PLATE	1	-
4	586221202	PLATE	1	-
5	589481206	PLATE	1	-
6	580308202	SUPPORT	2	-
8	589483501	SPRING	2	-
9	532192749	SWITCH	1	-
11	586428601	SUPPORT LEG	1	-
12	585989301	BUMPER	2	-
13	539104763	CLIP	5	-
14	539990316	BOLT	4	-
15	510422701	SCREW	2	-
16	874780620	BOLT	2	-
17	582478702	BUMPER	1	-
18	539110303	BOLT	2	-
19	874490512	BOLT	4	-
20	817000510	BOLT	6	-
21	539112899	NUT, 5/16-18, NYLOC	4	-
22	873900400	NUT	2	-
23	819141614	WASHER	1	-
24	590899903	BRACKET	2	-
25	589028501	SCREW	1	-
26	539102587	ABSORBER	1	-
27	597658203	SERVICE KIT	1	-
28	597959401	COVER	1	-

Ref.	Article N.	Description	Qty	Kit
1	546963201	WHEEL ASSY *Fits 970729905*	2	-
1	590486701	WHEEL *FITS 967271801, 967271802, 967271901, 967665701, 970458801*	2	-
1	538672601	WHEEL *Fits 967665704, 967324403*	2	-
2	590486802	WHEEL *Fits 967271802*	2	-
2	595910102	WHEEL ASSY *Fits 970729905*	2	-
2	576588602	WHEEL ASSY *Fits 967665704, 967324403, 967665701, 967271801, 967271901, 970458801*	2	-
3	586650310	YOKE *Fits 970729905*	2	-
3	586650302	YOKE *Fits 967665704, 967324403, 967665701, 967271801, 967271901, 970458801*	2	-
3	510186505	YOKE *Fits 967271802*	2	-
4	539115638	FITTING *Fits 967271801, 967271802, 967324403*	2	-
4	596623501	VALVE *Fits 967665704, 970729905, 967665701, 970458801, 967271901*	2	-
5	539103300	NIPPLE *NIPPLIE*	2	-
6	539112660	BEARING *BEARING*	2	-
7	539117901	BLADE BUSHING *BUSHING*	2	-
8	539102535	CAP *CAP*	2	-
9	539115749	PLUG *PLUG*	2	-
10	585995401	SPACER *SPACER*	2	-
11	539115747	SPRING *SPRING*	2	-
12	874950516	SCREW *SCREW*	2	-
13	576601503	SCREW *SCREW*	2	-
14	521991103	NUT *NUT*	2	-
15	587653902	NUT	8	-

Ref.	Article N.	Description	Qty	Kit
		NUT		
16	539115675	WASHER *WASHER*	2	-
17	819182212	WASHER *WASHER*	2	-
1	597658101	SEAT *For 96795380100, 96795380200, 96795380300*	1	-
1	536178101	SEAT *For 96795380400, 967665704, 970729905*	1	-
1	532406625	SEAT *For 967271801*	1	-
1	532439822	SEAT *For 967271802, 967271901, 967324403, 967665701*	1	-
1	597658102	SEAT *For 970458801*	1	-
2	597330002	BRACKET	1	-
2	598001601	SERVICE KIT *For 967665704, 970729905*	1	-
2	596768801	MODULE *For 967271801, 967271802, 967271901, 967324403, 967665701, 970458801*	1	-
3	586220802	SUPPORT PLATE	1	-
4	586221202	PLATE	1	-
5	597160003	PLATE	1	-
6	580308202	SUPPORT	1	-
7	590777602	BRACKET	1	-
8	596240701	BOLT	2	-
9	532192749	SWITCH	1	-
10	594944401	NUT	2	-
11	586428601	SUPPORT LEG	1	-
12	585989301	BUMPER	2	-
13	539104763	CLIP	5	-
14	539990316	BOLT	4	-
15	510422701	SCREW	2	-
16	521996502	NUT	2	-
17	597781801	BOLT	2	-
18	597553401	BUMPER	2	-
19	874490512	BOLT	4	-
20	817000510	BOLT	6	-
21	597783101	KNOB	2	-
22	598001601	SERVICE KIT	1	-

Ref.	Article N.	Description	Qty	Kit
22	597298202	BRACKET *Fits 967665703-00*	1	-
23	597658203	SERVICE KIT	1	-
24	597959401	COVER	1	-
25	539112899	NUT, 5/16-18, NYLOC	4	-
26	597869301	BOLT	2	-

SEAT

For 970458801-01, 967953801-01

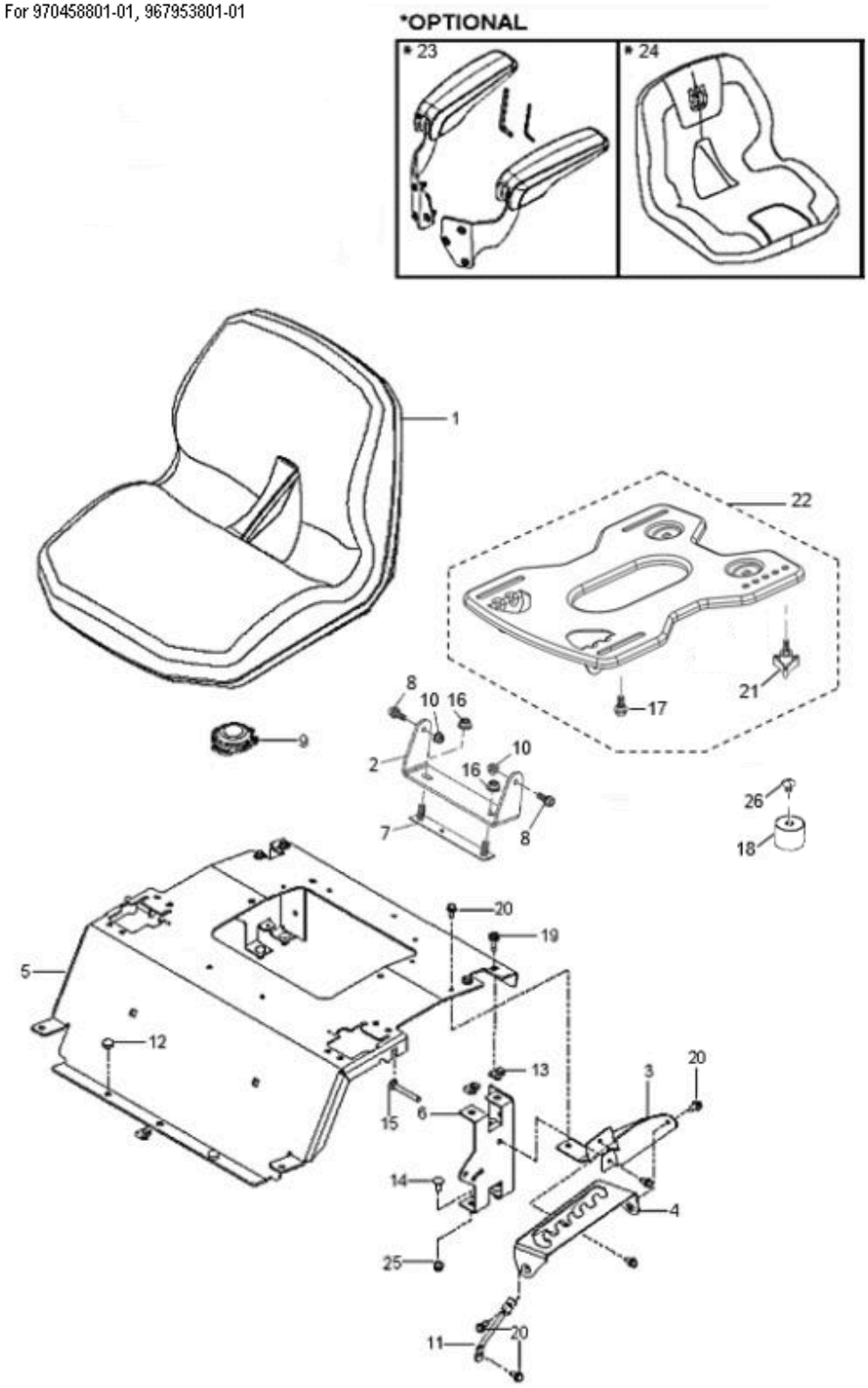

Ref.	Article N.	Description	Qty	Kit
1	587595601	DECAL	1	-
2	587595501	DECAL	1	-
3	587769201	DECAL	2	-
3	587769202	DECAL *Z242F SPECIAL EDITION SIDE RAIL DECAL*	1	-
4	539105745	DECAL	1	-

Ref.	Article N.	Description	Qty	Kit
5	532428677	DECAL	1	-
6	539108385	DECAL	1	-
6	585142401	DECAL *For 970458801, FRENCH*	1	-
7	539108386	DECAL	1	-
8	539109897	DECAL	1	-
8	585142501	DECAL *For 970458801, FRENCH*	1	-
9	590485501	DECAL	1	-
9	598655402	DECAL *For 970458801, FRENCH*	1	-
9	537449102	DECAL *STARTING INSTRUCTIONS FRENCH 97072990500*	1	-
10	532423829	DECAL	1	-
11	588035101	DECAL	1	-
12	586978801	DECAL	1	-
13	577469001	DECAL	2	-
14	510240201	DECAL	1	-
15	589357901	DECAL	2	-
16	501082601	DECAL *For 970458801-01, 970458801-00*	1	-
16	591357301	DECAL *For 96766570300, 967953801-01*	1	-
17	581724102	DECAL	1	-
18	587000701	PAD *For 96766570300, 967953801-01*	1	-
18	593363001	DECAL *For 970458801-01, 970458801-00*	1	-
19	592898301	DECAL *For 96766570300, 967953801-01*	1	-
20	590884901	DECAL *For 96766570300, 967953801-01*	1	-
21	536831101	DECAL *For 96795380400, 96795380400 RH Park Brake Decal*	1	-
22	536831102	DECAL *For 96795380400, 96795380400 LH Park Brake Decal*	1	-
1	593898602	PLATE	1	-
2	587241601	CLUTCH	1	-
3	583955701	TUBE	1	-
4	583955601	TUBE	1	-
5	581886702	BRACKET	1	-

Ref.	Article N.	Description	Qty	Kit
6	532448145	ARM	1	-
7	582538901	SPINDLE	1	-
8	532193197	PULLEY	1	-
9	587537401	PULLEY	1	-
10	587660101	SPACER	1	-
11	539132859	HEAT SHIELD	1	-
12	587633302	STOP	1	-
13	587451202	GUARD	1	-
14	539131604	MUFFLER ASSY	1	-
15	532196105	SPRING	1	-
16	584825501	HOSE ASSY *For all except 96766570100, 96795380400, 97045880101 & 97072990500*	1	-
16	532148456	TUBE *For 96766570100, 96795380400, 97045880101 & 97072990500*	1	-
17	539101363	CLAMP *For all except 96766570100, 96795380400, 97045880101 & 97072990500*	1	-
18	522599001	ADAPTER *For all except 96766570100, 96795380400, 97045880101 & 97072990500*	1	-
19	585807101	PLUG *For all except 96766570100, 96795380400, 97045880101 & 97072990500*	1	-
20	501603701	BEARING	2	-
21	582539501	BOLT	1	-
22	874520656	BOLT	1	-
23	872140506	BOLT *For 970458801-01, 970458801-00*	2	-
23	539990208	SCREW *For 96766570300, 967953801-01*	2	-
24	872140508	BOLT *For 970458801-01, 970458801-00*	2	-
24	539990316	BOLT *For 96766570300, 967953801-01*	2	-
25	581332803	BOLT	1	-
26	817490410	SCREW *For all except 96766570100, 96795380400, 97045880101 & 97072990500*	1	-
27	539976949	BOLT *For 970458801-01, 970458801-00*	1	-
27	874780620	BOLT *For 96766570300, 967953801-01*	4	-
28	817490512	SCREW	4	-
29	521991101	NUT	1	-
30	539112899	NUT, 5/16-18, NYLOC	5	-

Ref.	Article N.	Description	Qty	Kit
31	539976979	NUT	2	-
32	539990692	WASHER	2	-
33	532126197	WASHER	1	-
34	810030600	WASHER *For 970458801-01, 970458801-00*	4	-
34	539990118	WASHER *For 96766570300, 967953801-01*	4	-
35	532178151	GASKET	2	-
36	532184362	NUT	4	-
41	522598601	WIRING ASSY *KAWASAKI ENG ONLY*	1	-
42	589543901	INSTRUCTION *NOT SHOWN*	1	-
1	585522801	CONSOLE ASSY	1	-
1	598602606	CONSOLE ASSY *For 96795380400*	1	-
2	586621201	CONSOLE ASSY	1	-
2	586621203	CONSOLE ASSY *For 96795380400*	1	-
3	589924705	FUEL TANK ASSY *Fits 2.75 filler neck*	1	-
3	531016702	FUEL TANK ASSY *For 96795380400*	1	-
4	529989702	CAP *Fits 2.00 filler neck*	1	-
4	585124801	FUEL CAP ASSY *Fits 2.75 filler neck*	1	-
5	539112438	THROTTLE CABLE	1	-
6	586881501	CHOKE CONTROL ASSY	1	-
7	539107541	IGNITION SWITCH	1	-
8	582107602	SWITCH	1	-
9	587601501	SWITCH	2	-
10	539133049	KNOB	1	-
11	585522701	CONTROL PANEL	1	-
11	585522709	CONTROL PANEL *For 96795380400*	1	-
12	532123899	BATTERY *Round Terminal (B)*	1	-
12	579411601	BATTERY *Square Terminal (A)*	1	-
13	510030003	BRACKET	1	-

Ref.	Article N.	Description	Qty	Kit
14	582609602	BOX	1	-
15	532131563	COVER	3	-
16	539102759	INSULATOR	1	-
17	576618101	TANK VENT	1	-
18	539916325	VALVE	1	-
19	586123906	FUEL HOSE	1	-
20	582042801	SOLENOID	1	-
21	587198601	HARNESS	1	-
22	587044550	HOSE	1	-
23	587044810	HOSE	1	-
24	587044818	HOSE	1	-
25	532123487	HOSE CLAMP	4	-
26	532003645	BUSHING	1	-
27	532437492	GROMMET	1	-
28	532139277	NIPPLE	1	-
29	586161801	HOUR METER	1	-
30	532140401	KEY	1	-
31	586108201	HARNESS	1	-
32	588839401	HOOK	2	-
33	545227101	SCREW	2	-
34	539111229	SCREW	1	-
35	532141841	SCREW	2	-
36	586936001	SCREW *For 970458801-01, 970458801-00*	2	-
36	574822701	SCREW *For 96766570300, 967953801-01*	2	-
37	539990645	BOLT	2	-
38	595901601	BOLT *Square Terminal (A)*	2	-
38	872140506	BOLT *For 970458801-01, 970458801-00*	2	-
38	874760412	BOLT *Round Terminal (B) For 96766570300, 967953801-01*	2	-
39	817490408	SCREW	2	-
40	594944401	NUT *Square Terminal (A)*	2	-
40	596133601	LOCK NUT *Round Terminal (B) For 96766570300, 967953801-01*	2	-
40	539112899	NUT, 5/16-18, NYLOC *For 970458801-01, 970458801-00*	2	-

Ref.	Article N.	Description	Qty	Kit
41	521996501	NUT	2	-
42	539976978	NUT	5	-
48	586337301	HARNESS *NOT SHOWN*	1	-
49	532109748	RELAY *NOT SHOWN*	1	-
50	586548101	HARNESS	1	-
51	505280001	TIE WRAP	1	-
1	587623101	SHAFT ASSY *For 970458801-01, 970458801-00*	1	-
1	586429702	SHAFT ASSY *For 96766570300, 967953801-01*	1	-
2	586457101	LINK	1	-
3	586457201	LINK	2	-
4	587622901	LIFTING LEVER ASSY *For 970458801-01, 970458801-00*	1	-
4	586428701	HANDLE *For 96766570300, 967953801-01*	1	-
5	580486101	SPACER	2	-
6	585682102	BRACKET	2	-
7	525847201	LINK	2	-
8	580962301	GRIP	1	-
9	586867601	SPRING	1	-
10	532196314	SPRING *For 970458801-01, 970458801-00*	1	-
11	532195161	STUD	1	-
12	587225301	PIN *For 970458801-01, 970458801-00*	2	-
13	532196314	SPRING *For 970458801-01, 970458801-00*	1	-
13	532194209	SPRING *For 96766570300, 967953801-01*	4	-
14	587225301	PIN *For 970458801-01, 970458801-00*	4	-
14	532194208	PIN *For 96766570300, 967953801-01*	4	-
15	510184901	BUSHING	2	-
16	585701401	PIN	2	-
17	586457501	BELLCRANK	2	-
18	586457401	BELLCRANK	1	-
19	585682001	ROD	1	-

Ref.	Article N.	Description	Qty	Kit
20	532137729	SCREW	2	-
21	586561301	SCREW	2	-
22	532175994	NUT	1	-
23	812000002	RETAINER RING	1	-
24	819131316	WASHER	1	-
25	587623001	LINK ASSY *For 970458801-01, 970458801-00*	2	-
25	522858601	LINK ASSY *For 96766570300, 967953801-01*	2	-
26	539112899	NUT, 5/16-18, NYLOC	2	-
27	819212113	WASHER	2	-
28	532445060	LEVER *For 970458801-01, 970458801-00*	1	-
29	539118762	SPRING *For 970458801-01, 970458801-00*	1	-
1	597658101	SEAT *For 96795380100, 96795380200, 96795380300,*	1	-
1	536178101	SEAT *For 96795380400, 967665704, 970729905*	1	-
1	532406625	SEAT *For 967271801*	1	-
1	532439822	SEAT *For 967271802, 967271901, 967324403, 967665701*	1	-
1	597658102	SEAT *For 970458801*	1	-
1	536178103	SEAT *For 97045880101*	1	-
2	596992703	BRACKET	1	-
2	596768801	MODULE *Seat Pan For 967271801, 967271802, 967271901, 967324403, 967665701, 970458801*	1	-
2	598001601	SERVICE KIT *Seat Pan For 967665704, 970729905*	1	-
3	586220802	SUPPORT PLATE	1	-
4	586221202	PLATE	1	-
5	589481206	PLATE	1	-
6	580308202	SUPPORT	2	-
8	589483501	SPRING	2	-
9	532192749	SWITCH	1	-
11	586428601	SUPPORT LEG	1	-
12	585989301	BUMPER	2	-

Ref.	Article N.	Description	Qty	Kit
13	539104763	CLIP	5	-
14	539990316	BOLT	4	-
15	510422701	SCREW	2	-
16	874780620	BOLT	2	-
17	582478702	BUMPER	1	-
18	539110303	BOLT	2	-
19	874490512	BOLT	4	-
20	817000510	BOLT	6	-
21	539112899	NUT, 5/16-18, NYLOC	4	-
22	873900400	NUT	2	-
23	819141614	WASHER	1	-
24	590899903	BRACKET	2	-
25	589028501	SCREW	1	-
26	539102587	ABSORBER	1	-
27	597658203	SERVICE KIT	1	-
28	597959401	COVER	1	-
1	546963201	WHEEL ASSY *Fits 970729905*	2	-
1	590486701	WHEEL *FITS 967271801, 967271802, 967271901, 967665701, 970458801*	2	-
1	538672601	WHEEL *Fits 967665704, 967324403*	2	-
2	590486802	WHEEL *Fits 967271802*	2	-
2	595910102	WHEEL ASSY *Fits 970729905*	2	-
2	576588602	WHEEL ASSY *Fits 967665704, 967324403, 967665701, 967271801, 967271901, 970458801*	2	-
3	586650310	YOKE *Fits 970729905*	2	-
3	586650302	YOKE *Fits 967665704, 967324403, 967665701, 967271801, 967271901, 970458801*	2	-
3	510186505	YOKE *Fits 967271802*	2	-
4	539115638	FITTING *Fits 967271801, 967271802, 967324403*	2	-
4	596623501	VALVE *Fits 967665704, 970729905, 967665701, 970458801, 967271901*	2	-
5	539103300	NIPPLE *NIPPLIE*	2	-
6	539112660	BEARING	2	-

Ref.	Article N.	Description	Qty	Kit
		BEARING		
7	539117901	BLADE BUSHING *BUSHING*	2	-
8	539102535	CAP *CAP*	2	-
9	539115749	PLUG *PLUG*	2	-
10	585995401	SPACER *SPACER*	2	-
11	539115747	SPRING *SPRING*	2	-
12	874950516	SCREW *SCREW*	2	-
13	576601503	SCREW *SCREW*	2	-
14	521991103	NUT *NUT*	2	-
15	587653902	NUT *NUT*	8	-
16	539115675	WASHER *WASHER*	2	-
17	819182212	WASHER *WASHER*	2	-
1	597658101	SEAT *For 96795380100, 96795380200, 96795380300*	1	-
1	536178101	SEAT *For 96795380400, 967665704, 970729905*	1	-
1	532406625	SEAT *For 967271801*	1	-
1	532439822	SEAT *For 967271802, 967271901, 967324403, 967665701*	1	-
1	597658102	SEAT *For 970458801*	1	-
2	597330002	BRACKET	1	-
2	598001601	SERVICE KIT *For 967665704, 970729905*	1	-
2	596768801	MODULE *For 967271801, 967271802, 967271901, 967324403, 967665701, 970458801*	1	-
3	586220802	SUPPORT PLATE	1	-
4	586221202	PLATE	1	-
5	597160003	PLATE	1	-
6	580308202	SUPPORT	1	-

Ref.	Article N.	Description	Qty	Kit
7	590777602	BRACKET	1	-
8	596240701	BOLT	2	-
9	532192749	SWITCH	1	-
10	594944401	NUT	2	-
11	586428601	SUPPORT LEG	1	-
12	585989301	BUMPER	2	-
13	539104763	CLIP	5	-
14	539990316	BOLT	4	-
15	510422701	SCREW	2	-
16	521996502	NUT	2	-
17	597781801	BOLT	2	-
18	597553401	BUMPER	2	-
19	874490512	BOLT	4	-
20	817000510	BOLT	6	-
21	597783101	KNOB	2	-
22	598001601	SERVICE KIT	1	-
22	597298202	BRACKET *Fits 967665703-00*	1	-
23	597658203	SERVICE KIT	1	-
24	597959401	COVER	1	-
25	539112899	NUT, 5/16-18, NYLOC	4	-
26	597869301	BOLT	2	-