Product Catalog: Husqvarna/Z254FX

DECALS

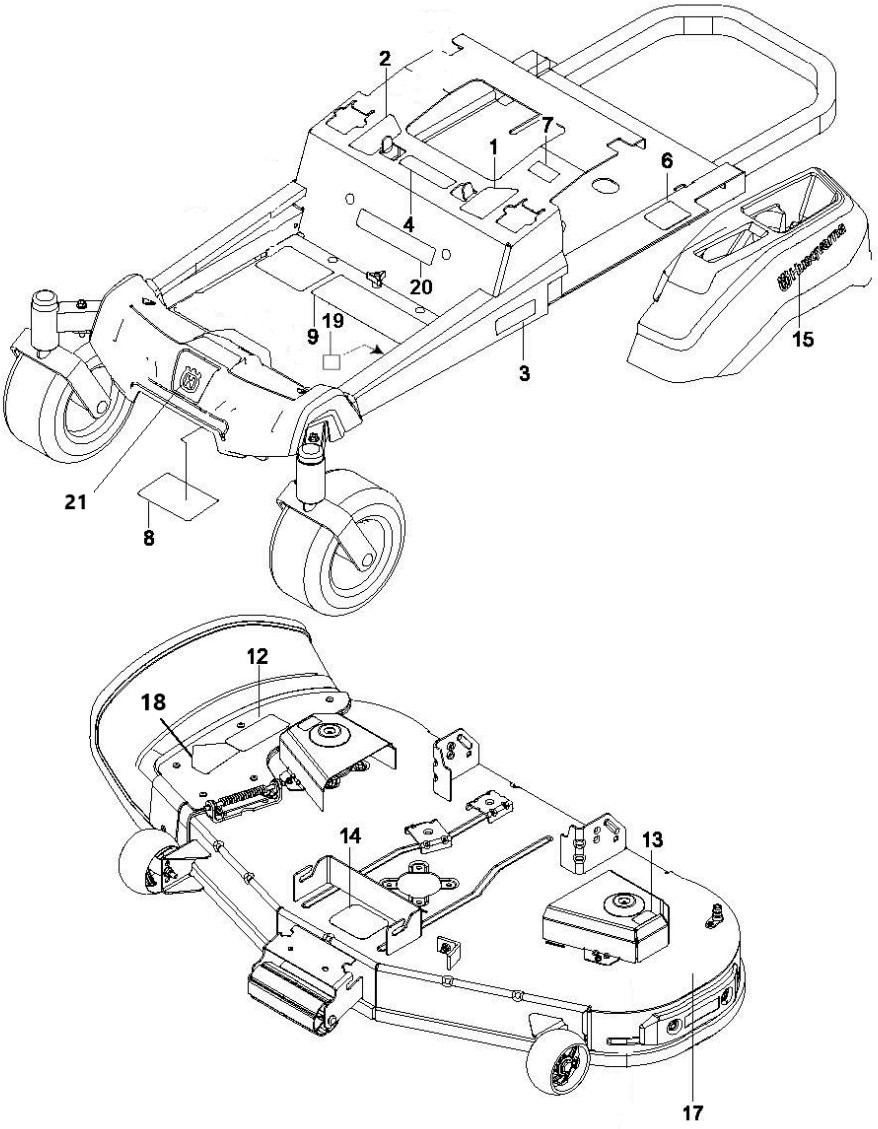

Ref.	Article N.	Description	Qty	Kit
1	536831102	DECAL *DECAL.ZTR.PKBRAKE.AMG.LH*	1	-
2	536831101	DECAL *DECAL.ZTR.INS.PKBRAKE.AMG.RH*	1	-
3	548309502	DECAL *DECAL.Z254FX*	2	-
4	529527001	DECAL *DECAL.ZTR.WARNING.BATTERY.SYMB*	1	-
6	539108385	DECAL *DECAL.DO NOT TOW*	1	-

Ref.	Article N.	Description	Qty	Kit
7	539108386	DECAL *DECAL, EXITING MOWER*	1	-
8	539109803	DECAL *DECAL.SERVICE.RZ.*	1	-
9	537449101	DECAL *DECAL.ZTR.Z200.INST.HUS.AMG.EN*	1	-
12	590810801	DECAL *DECAL.TR/ZTR.DECKWARN.CC.BLK*	1	-
13	589357902	DECAL *DECAL.DECK.CLEARCUT.NOSTEP*	2	-
14	546540701	DECAL *DECAL.ZTR.BLTROUTING.3BLADE*	1	-
15	577469001	DECAL *DECAL.HUSQVARNA.210MM*	1	-
17	537450103	DECAL *DECAL.DECK.54:CLEARCUT.BLACK*	1	-
18	584904602	DECAL *DECAL.DECK.DEFLECTOR.WARN*	1	-
19	529405301	DECAL *DECAL.BUILTINAMERICA.HUSQ*	1	-
20	591357301	DECAL *DECAL.LOGO.SEATPLATE.RZ.ZTR.HU*	1	-
21	532428677	DECAL *BADGE.CROWN.DECAL*	1	-
1	598736102	PLATE *PLATE.ENG.23RZ.MS431*	1	-
2	581886702	BRACKET *BRACKET.PNT.MUFFLER.EDIP*	1	-
3	548529902	CLUTCH *CLUTCH.STOP.BLACK*	1	-
4	587451202	GUARD *GUARD.MUFFLER.WO.TOW.HITCH.BLK*	1	-
5	539132859	HEAT SHIELD *SHIELD, HEAT*	1	-
6	539131604	MUFFLER ASSY *MUFFLER.ASM.TWIN*	1	-
7	595901501	BOLT *BOLT.CUP.SQ.NCK.5/16-18 X 1.02*	2	-
8	595901601	BOLT *BOLT.CUP.5/16-18 X 3/4.CLR.ZNC*	1	-
9	596135901	BOLT *BOLT.HEX.5/16-18 X 3/4.CLR.ZNC*	4	-
10	594944401	NUT	5	-

Ref.	Article N.	Description	Qty	Kit
		NUT.HEX.FLNG.5/16-18.NYLOC.CLR		
11	532448145	ARM *ARM.IDLER*	1	-
12	501603701	BEARING *BEARING.FLANGED.PLASTIC.3/4ID*	2	-
13	582538902	SPINDLE *SPINDLE.IDLER.CLR.ZINC*	1	-
14	582539502	BOLT *BOLT.1/2-13X2.75 GRD5*	1	-
15	521991102	NUT *1/2-13.HEX.FLANGE.NYLOK*	1	-
16	532193197	PULLEY *PULLEY.PNT.IDLER 48PRIMARY*	1	-
17	532193197	PULLEY *PULLEY.IDLER.48PRIMARY*	1	-
18	596433901	SCREW *SCREW.HEX.3/8-16 X 3.54.CLR*	1	-
19	596134901	WASHER *WASHER.PLAIN.3/8 X 7/8*	2	-
20	596240901	NUT *NUT.PREVAIL.3/8-16 X .564*	2	-
21	532196105	SPRING *SPRING.DRIVE.DECK.2006*	1	-
22	587537401	PULLEY *PULLEY.ENGINE*	1	-
23	548504501	SPACER *SPACER.SPACER.1.125.W/OGURA*	1	-
24	592821701	CLUTCH *CLUTCH.OGURA.GT1,5-EH17(D)*	1	-
25	532126197	WASHER *WASHER.1-1/2 ODX15/32 IDX.250*	1	-
26	581332804	BOLT *BOLT.CLUTCH.7/16-20X3.5.GRADE5*	1	-
27	596564402	BOLT *BOLT.HEX.HEAD.3/8-16 X 1-1/4*	4	-
28	596238701	WASHER *WASHER.SPRING.LOCK.381IDX.680*	4	-
29	583955601	TUBE *TUBE EXHAUST LEFT KAWA TWIN*	1	-
30	583955701	TUBE *TUBE EXHAUST RIGHT KAWA TWIN*	1	-
31	532178151	GASKET *GASKET.EXHAUST.KAWASAKI*	2	-

Ref.	Article N.	Description	Qty	Kit
32	532184362	NUT *NUT.HEX.FLANGE.TOPLOCK.M8-1.25*	4	-
33	532131563	COVER *COVER.TERMINAL.RED*	1	-
34	596031501	LOCK NUT *LOCK.NUT.188 X.218.CLEAR.ZINC*	1	-
35	532148456	TUBE *TUBE.EASY_OIL_DRAIN*	1	-
1	585039803	GUARD *GUARD.ENG.HUSQ.RZ.AM.GRY.X685*	1	-
2	589283302	FRAME TUBE *FRAME.TUBE.RZ.MAIN.WELD.LH.ORG*	1	-
3	589283402	FRAME TUBE *FRAME.TUBE.RZ.MAIN.WELD.RH.ORG*	1	-
4	584991002	TUBE *TUBE.FRAME.RR.HUSQ.23.RZ.ORG*	1	-
5	598712402	PLATE KIT *PLATE.RZ.FOOTREST.AM.GREY.X685*	1	-
6	586703802	FRONT COVER *FRONT.COVER.RZ.FOOTREST.RF.685*	1	-
7	529365102	SUPPORT *SUPPORT.RZ.FOOTREST.PLATE.X431*	1	-
8	587546902	SCREW *SCREW.ASM.5/16-18.ADJ.ISO.TAP*	1	-
9	585916701	LIGHT *LIGHT.ZTR.LED.ASM*	1	-
10	587225201	GROMMET *GROMMET.RUBBER.PUSHIN*	2	-
11	585989301	BUMPER *GROMMET.BUMPER*	7	-
12	585523104	CROSS MEMBER *CROSS.PNT.MEMBER.BLK*	1	-
13	587458602	BRACKET *BRACKET.SKIDPLTE.LED.RFRSHX417*	1	-
14	585331502	COVER *COVER.RAIL.LH.RZ.x668*	1	-
15	585331602	COVER *COVER.RAIL.RH.RZ.x668*	1	-
16	597783101	KNOB *KNOB.3WING.5/16-18.CLR.ZN*	1	-
17	585474302	BRACKET *ROD.BYPASS.EZT.X431*	2	-
18	593682604	SUPPORT	1	-

Ref.	Article N.	Description	Qty	Kit
		SUPPORT.RZ.LH.CONSOLE.BLK		
19	580501302	BRACKET *FENDER.SUPPORT.PNT.X431*	2	-
20	593118304	SUPPORT *SUPPORT.RZ.CONSOLE.RH.MS431*	1	-
21	586654302	BOLT *BOLT.SHOULDER.3/8-16X3.GR5 CLR*	2	-
22	586881101	BOLT *BOLT.5/16-18.THRD.ROLL.SHOULDR*	2	-
23	817000510	BOLT *BOLT.5/16-18HEX.WHS.HD.LCKSERR*	7	-
24	595316601	BOLT *BOLT.HHD FLNG 5/16-18X2.75 GR5*	3	-
25	596564405	BOLT *BOLT.HEX.HEAD.3/8-16 X 3*	8	-
26	574233802	SCREW *HHFS.5/16 X 2.25 GD5.CLR.ZINC*	8	-
27	577117702	BOLT *HHFS.3/8-16 X 3.GR5.CLEAR.ZINC*	4	-
28	596321701	SCREW *SCREW.#10 X 0.750.BOS.THREAD*	6	-
29	817580520	BOLT *SCREW.THDROL.5/16-18X1.25 TYTT*	2	-
30	596434001	SCREW *SCREW.#10X0.500.BOS.THREAD*	2	-
31	521996502	NUT *NUT.HEX.LOCK.W/FLANGE.3/8-16*	14	-
32	594944401	NUT *NUT.HEX.FLNG.5/16-18.NYLOC.CLR*	16	-
34	595901901	NUT *NUT.7/16-14.GR5.CLR.ZINC*	2	-
36	532423063	WASHER *PALNUT.5/16*	1	-
39	593842101	BUSHING *BUSHING*	2	-
40	521938102	LINK *LINK.FRINT.SUSP.CLEAR.ZINC*	1	-
41	595901901	NUT *NUT.7/16-14.GR5.CLR.ZINC*	2	-
42	586548101	HARNESS *HARNESS.LED.LIGHT.RZ*	1	-
1	548325202	TRANSMISSION *TRANSMISSION.EZT.SHORT.20.RT*	1	-

Ref.	Article N.	Description	Qty	Kit
2	548325201	TRANSMISSION *TRANSMISSION.EZT.SHORT.20.LT*	1	-
3	580806602	BRACKET *BRACKET.EZT.MOUNT.REAR.PNTX431*	2	-
4	595316601	BOLT *BOLT.HHD FLNG 5/16-18X2.75 GR5*	4	-
5	594944401	NUT *NUT.HEX.FLNG.5/16-18.NYLOC.CLR*	6	-
6	593852803	SPACER *SPACER.TUBE.EZT.6.810*	2	-
7	596581901	BOLT *BOLT.HEXAGON.3/8-16 X 2-1/2*	4	-
8	596565301	WASHER *WASHER;3/8X0.08IN.ST.CLR.ZINC*	4	-
9	596238701	WASHER *WASHER.SPRING.LOCK.381IDX.680*	4	-
10	580806502	SUPPORT *SUPPORT.FRONT.TRANS.PNTX431*	2	-
11	574233802	SCREW *HHFS.5/16 X 2.25 GD5.CLR.ZINC*	2	-
12	596930401	LINKAGE *LINKAGE.BRAKE.LT.CLR.ZINC*	1	-
13	596930701	LINKAGE *LINKAGE.BRAKE.RH.CLR.ZINC*	1	-
14	587115301	PIN *PIN.CLEVIS.3/16X.475*	1	-
15	587225301	PIN *PIN COTTER;LOCKING;BOWTIE;1IN*	1	-
16	596299801	SPRING *SPRING.BRAKE.ROD.CLEAR.ZINC*	2	-
17	595086601	NUT *NUT.HEX.1/4-20 ST ZPB*	2	-
18	596582301	WASHER *WASHER 0.28 X 0.63 CLR.ZN*	4	-
19	585474402	ROD *ROD.BYPASS.LH.EZT.CLEAR.ZINC*	1	-
20	585474502	ROD *ROD.BYPASS.RH.EZT.CLEAR.ZINC*	1	-
21	596580601	PIN *PIN.RETAINING.1-7/16 X 0.073*	4	-
22	586665101	SPRING *SPRING.ROD.BYPASS.EZT*	2	-
23	587653903	NUT	8	-

Ref.	Article N.	Description	Qty	Kit
		NUT.1/2-20UNF-2B.1/2-20X3/4GR8		
24	539110411	DRIVE BELT *Drive BELT, EZT'S*	1	-
1	596327001	SERVICE KIT *DECK.54CC.WELDMT.RZ*	1	-
2	592951801	DRIVE BELT	1	-
3	582760502	BLADE *BLADE.54CC.HI-LIFT.PZ.165.431*	3	-
4	590304407	COVER *COVER.PNT.54CC.MDRL.LH.ZTR.GRY*	1	-
5	590304207	COVER *COVER.PNT.54CC.MANDREL.RH.GREY*	1	-
6	534214702	HOUSING ASSY *HOUSING.ASM.NO-GREASE.CASTIRON*	3	-
7	589527301	WHEEL *WHEEL.GAUGE.WIDE(RALLY)*	4	-
8	574169601	ROLLER *ROLLER, GAUGE .635 BORE*	2	-
9	532175708	PULLEY ASSY *PULLEY.MANDREL.CRD 107CM.DOM.*	3	-
10	532197379	PULLEY *PULLEY.IDLER.4,5.X431*	2	-
11	532197380	PULLEY *PULLEY.IDLER.4,5.SPACER.X431*	1	-
12	590632204	DEFLECTOR ASSY *DEFLECTOR.ASM.54CC.RES.BLACK*	1	-
13	595297001	ROD *ROD.HINGE*	1	-
14	585323901	BEARING *BEARING.MANDREL.TOP.EXTENDED*	3	-
15	582219602	ARM *ARM.PNT.IDLER.CLEARCUT.54.EDIP*	1	-
16	536050602	LINK *ARM.FIXED.MOWER.SUSP.X431*	2	-
17	532415598	HOSE COUPLING *PORT.WASHOUT*	1	-
18	532416405	COUPLING *COUPLING.QUICK-CONNECT*	1	-
19	596482001	SPRING *SPRING.CLEAR.ZINC*	2	-
20	587354701	SPRING *SPRING.DEFLECTOR*	1	-
21	532197251	SPRING	1	-

Ref.	Article N.	Description	Qty	Kit
		*USE FOR SERIAL # STARTING 02012025*000000 & AFTER*		
21	587358401	SPRING *SPRING.EXTN.42FCS.TR.DECK.DRV*	1	-
22	574196502	TUBE *TUBE.ROLLER.AXLE.LONG.CLR.ZINC*	1	-
23	587256501	SHAFT *SHAFT ASM.MNDRL.N/GREASEABLE*	3	-
24	589813301	PLUG *PLUG.TREE..203HOLE.BLK*	3	-
25	590732501	BUMPER ASSY *BUMPER.ASM.54CC.TRIMSIDE.HUSQ*	1	-
26	532194209	SPRING *PIN.COTTER.7/16.BOW TIE LOCK*	2	-
27	593824001	STUD *STUD.W/DANTI-ROTATION*	2	-
28	532170165	BOLT *BOLT.SHOULDER.5/16-18 TT*	2	-
29	596434404	BOLT *BOLT.SHOULDER.3/8-16X3-5/8*	4	-
30	584309301	SCREW *SCREW.SEMS.7/16-20X1.HEX.HEAD*	3	-
31	596240801	BOLT *BOLT.EYELET.5/16-18 X 3-1/2*	1	-
32	584953901	BOLT *BOLT.HEX.WSHRHD.313-18X1.19*	12	-
33	596136301	BOLT *BOLT.CUP.HEAD.3/8-16 X 2*	1	-
34	594944501	BOLT *BLT.CUP.HD.SQR.1/2-13X8.0 G5*	1	-
35	532196539	BOLT *BOLT.SHOULDER*	2	-
36	532137729	SCREW *SCREW.THD.ROLL.1/4-20 X 5/8*	9	-
37	599972501	BOLT *BOLT.HEX.GR8.CLR.Zn*	1	-
38	588438301	SCREW *SCREW.7/16-14 X 2.125.WASHER*	1	-
39	596134801	HEXAGON NUT *NUT.HEX.9/16-18 X 1.010*	3	-
40	873900600	NUT *NUT.LOCK.FLG.3/8-16UNC*	5	-
41	521991102	NUT *1/2-13.HEX.FLANGE.NYLOK*	1	-

Ref.	Article N.	Description	Qty	Kit
42	596039201	LOCK NUT *NUT.SER.FLANGE.LOCKNUT.5/16-18*	2	-
43	596135701	LOCK NUT *NUT.LOCK.PRVL.TORQ.5/16-18X.68*	2	-
44	532110452	NUT *NUT.PUSH.PIN.HINGE.PHOS.&.OIL*	1	-
45	532178515	WASHER *WASHER.FLAT.HARDENED*	1	-
47	819191912	WASHER *WASHER.1-5/32 X 19/32 X 12GA*	2	-
48	598752001	MANDREL *MANDREL.CAST.IRON*	3	-
49	521938102	LINK *LINK.FRINT.SUSP.CLEAR.ZINC*	1	-
1	586429702	SHAFT ASSY *SHAFT ASSY*	1	-
2	586457101	LINK *LINK*	1	-
3	586457201	LINK *LINK*	1	-
4	587622901	LIFTING LEVER ASSY *LIFTING LEVER ASSY*	1	-
5	580486102	SPACER *SPACER*	2	-
6	585682102	BRACKET *BRACKET*	2	-
7	587623001	LINK ASSY *LINK ASSY*	2	-
7	596766601	LINK ARM ASSY *LINK*	2	-
8	525847202	LINK *LINK ASSY*	2	-
9	587140502	ARM *ARM*	2	-
10	587623001	LINK ASSY *LINK ASSY*	2	-
11	532411555	GRIP *GRIP*	2	-
12	586867601	SPRING *SPRING*	4	-
13	532196314	SPRING *SPRING*	1	-
14	596482001	SPRING	2	-

Ref.	Article N.	Description	Qty	Kit
		SPRING		
15	593824001	STUD *STUD*	2	-
16	532194208	PIN *PIN*	2	-
17	587225301	PIN *PIN*	4	-
18	532194209	SPRING *SPRING*	1	-
19	510184901	BUSHING *BUSHING*	2	-
20	585701401	PIN *PIN*	2	-
21	532194209	SPRING *SPRING*	2	-
22	585682001	ROD *ROD*	2	-
23	586457401	BELLCRANK *BELLCRANK*	1	-
24	586457501	BELLCRANK *BELLCRANK*	1	-
25	532196539	BOLT *BOLT*	2	-
26	586561301	SCREW *SCREW*	2	-
27	532137729	SCREW *SCREW*	2	-
28	596135701	LOCK NUT *NUT*	2	-
30	589464902	NUT *NUT*	2	-
31	596320001	WASHER *WASHER*	2	-
32	596565301	WASHER *WASHER*	2	-
33	812000002	RETAINER RING *RETAINER RING*	1	-
1	548323801	SEAT *SEAT.18.LOW.PROFILE.SUSPENSION*	1	-
1	540603801	SEAT *FOR 97084740100, 97084750100*	1	-
2	598001601	SERVICE KIT *PLATE.MOUNTING.SK121.EDIP*	1	-

Ref.	Article N.	Description	Qty	Kit
3	586220802	SUPPORT PLATE *PLATE.SUPPORT.DECK.LIFT*	1	-
4	586221202	PLATE *PLATE.DECK.LIFT.X431*	1	-
5	597160003	PLATE *PLATE.SEAT.SUPPORT.RZ.RVS.X668*	1	-
6	580308202	SUPPORT *SUPPORT.REAR.SEAT.PNT431*	2	-
7	873970500	NUT *NUT.LOCK.HEX.FLANGE*	4	-
9	539132140	SWITCH *SEAT.SWITCH*	1	-
9	540670401	SWITCH *FOR 97084740100, 97084750100*	1	-
11	586428601	SUPPORT LEG *SUPPORT.LEG.DECK.LIFT*	1	-
12	585989301	BUMPER *GROMMET.BUMPER*	2	-
13	539104763	CLIP *CLIP*	5	-
14	539990316	BOLT *BOLT*	4	-
15	510422701	SCREW *SCREW*	2	-
18	596240701	BOLT *BOLT*	2	-
19	874490512	BOLT *BOLT*	4	-
20	817000510	BOLT *BOLT*	6	-
21	594944401	NUT *NUT*	2	-
22	521996502	NUT *NUT.FLANGE.*	2	-
26	597869301	BOLT *BOLT.CARRI.SQUR.3/8X.45.CLR Zn*	2	-
28	597330002	BRACKET *BRCKT.SEAT.PIVOT.SK121.RZ.X431*	1	-
34	597553401	BUMPER *BUMPER.3/8-16.INTERNAL THREAD*	2	-
1	598851703	TUBE *TUBE.RZ.LEVER.W/GRIP.RT X428*	1	-
2	598851704	TUBE	1	-

Ref.	Article N.	Description	Qty	Kit
		TUBE.RZ.LEVER.W/GRIP.LT X428		
3	585124705	BRACKET *BRACKET.CONTROLS.ZTR.E-DIP*	2	-
4	539131518	BEARING *BEARING, FLANGE*	2	-
5	576140301	LEVER *LEVER.CONTROL*	2	-
6	587601703	LEVER *CNTRL.LEVER.*	2	-
7	584927201	SPACER *SPACER.PIVOT.CONTROL*	2	-
8	539102720	GAS SPRING *DAMPENER*	2	-
9	547930201	BLOCK *BLOCK.TRACKING.CONTROL.REC.BLK*	2	-
12	588604902	ROD *ROD.ASM.RH.ADJUSTABLE.*	1	-
13	588605002	ROD *ROD.ASM.LH.ADJUSTABLE.*	1	-
14	537602401	CLIP *CLIP.R-CLIP*	2	-
15	587601501	SWITCH *SWITCH.INTLK.RZ.RFRSH.BUTTON*	2	-
16	596434301	BOLT *BOLT.HX.1/2-13 X 2-3/4.CLR.ZNC*	2	-
17	585986101	BOLT *SCREW.SHAKEPROOF.1.25.BLACK*	2	-
18	592858702	BOLT *BOLT.5/16-18X.75.HEX.FLANGE*	8	-
19	596580801	BOLT *BOLT.HEX.SCREW.5/16-18 X 1*	2	-
20	587885301	SCREW *SCREW.CAP.SOCKET.6PT.5/16-18*	2	-
21	525544002	BOLT *BOLT.HEXAGON.HEAD.5/16-18X1.25*	4	-
22	574822701	SCREW *SCR #10-24 X .75 SKT HD BLK ZN*	2	-
23	539108010	NUT *NUT 1/2-13HX JM NYL INST GR2ZN*	2	-
24	594944401	NUT *NUT.HEX.FLNG.5/16-18.NYLOC.CLR*	10	-
25	596583702	NUT *NUT.HEX.5/16-18.NYLOC.BLK_ZINC*	4	-

Ref.	Article N.	Description	Qty	Kit
26	596039201	LOCK NUT *NUT.SER.FLANGE.LOCKNUT.5/16-18*	4	-
27	532423063	WASHER	1	-
1	536856401	WHEEL ASSY *WHEEL.ASM.K3012.20x10.BLACK*	2	-
2	580830801	WHEEL ASSY *WHEEL.ASSY.FRONT.CASTER.11X6-5*	2	-
2	595910102	WHEEL ASSY *FOR 97084740100, 97084750100*	1	-
3	586650310	YOKE *YOKE.CASTER.ASM.6.AM.GRY.X685*	2	-
4	596623501	VALVE *VALVE.ZERK.1/2.DRIVE IN*	2	-
5	539103300	NIPPLE *VALVE.ZERK.1/4*	2	-
6	539112660	BEARING *BEARING, FLANGED*	2	-
7	539117901	BLADE BUSHING *CASTER BUSHING*	2	-
8	595281301	CAP *CAP GREASE*	2	-
9	596301001	PLUG *PLUG.CASTER.CLEAR.ZINC*	2	-
10	585995401	SPACER *SPACER.PIVOT*	2	-
11	596388901	SPRING *SPRING.CASTER.CLEAR.ZINC*	2	-
12	596319901	SCREW *SCREW.HEX.5/16-18 X 1 GR5*	2	-
13	576601503	SCREW *BOLT.RHSNB; 1/2-13 X 7.5*	2	-
14	521991103	NUT *NUT.LOCK 1/2-13 NYLOK.BLK.Zn*	2	-
15	587653903	NUT *NUT.1/2-20UNF-2B.1/2-20X3/4GR8*	8	-
16	596319801	WASHER *WASHER.1.025 X 1.625 X 0.063*	2	-
1	598602606	CONSOLE ASSY *CONSOLE.ASM.RZ.RH.AMG.MS685*	1	-
2	586621203	CONSOLE ASSY *CONSOLE.RZ.REFRESH.LH.MS685*	1	-
3	531016704	FUEL TANK ASSY *FUEL.TANK.ASM.RZ.2.25 2024*	1	-

Ref.	Article N.	Description	Qty	Kit
4	529979701	HARNESS *FUEL.CAP.VENTED.BLK*	1	-
5	597873201	THROTTLE *THROTTLE.CABLE.ASSY 39*	1	-
6	586881503	CHOKE CONTROL ASSY *CHOKE.CONTROL.ASM.PUSH-IN*	1	-
7	539107541	IGNITION SWITCH *IGNITION SWITCH*	1	-
8	582107602	SWITCH *SWITCH.PTO.8TERMINAL.STD.RED*	1	-
9	587601501	SWITCH *SWITCH.INTLK.RZ.RFRSH.BUTTON*	2	-
11	585522709	CONTROL PANEL *CONTROL.PANEL.RZ.REFSH.AM.GRY*	1	-
12	532163465	BATTERY *BATTERY.12VOLT.28AMP.WET*	1	-
13	593634404	BRACKET *BRACKET.PNT.BATTERY.MOUNT.EDIP*	1	-
14	582609602	BOX *BOX.PNT.BATTERY.RZ.EDIP*	1	-
15	532131563	COVER *COVER.TERMINAL.RED*	2	-
16	539102759	INSULATOR *INSULATOR-BATTERY*	1	-
17	576618101	TANK VENT *VALVE, FUEL CHECK*	1	-
18	586123906	FUEL HOSE *FUEL.HOSE.SHUT.OFF.ASM.10.18*	1	-
19	582042802	SOLENOID *SOLENOID W/BRASS.PLUNGER.Zn*	1	-
20	587198601	HARNESS *HARNESS.BTTRY.CABLE.RZ.REFRESH*	1	-
21	587044550	HOSE *HOSE.3/16.VAPOR.LINE.50LGTH*	1	-
22	547159601	GROMMET *VITON.GROMMET.FUEL.OUTLET*	1	-
23	584648201	GROMMET *GOMMET.FUEL.CHECK.VALVE*	1	-
24	532139277	NIPPLE *ELBOW.FUEL.TANK*	1	-
25	594919101	HOUR METER *HOURMETER.SRVMINDER.RECT*	1	-
26	532411935	KEY	1	-

Ref.	Article N.	Description	Qty	Kit
		IGNITION.KEY		
27	586108201	HARNESS *CABLE.BATTERY.POS.RZ*	1	-
28	588839401	HOOK *HOOK.J.BATTERY*	2	-
29	545227101	SCREW *SCREW.#6.PLASTITE*	2	-
30	596789701	SCREW *SCR.HEX.1/4-20X5/8*	1	-
31	532141841	SCREW *SCREW.10-16X0.650*	2	-
32	574822701	SCREW *SCREW.SAFETY.SWITCH*	2	-
33	595316801	BOLT *BOLT.BATTERY.BOX*	2	-
34	874760412	BOLT *BOLT.HEX.HD.1/4-20UNC X 3/4*	2	-
35	596135801	BOLT *BOLT.CONSOLE.*	2	-
36	596133601	LOCK NUT *LOCKNUT.KEPS.1/4-20*	2	-
37	521996502	NUT *NUT.BATTERY.BOX*	2	-
38	595086601	NUT *NUT.HEX.1/4-20 ST ZPB*	5	-
39	532123487	HOSE CLAMP *CLAMP.HOSE.BLK*	4	-
40	587044810	HOSE *HOSE.1/4.LOW.PERM.FUEL.LN.10*	1	-
41	587044818	HOSE *HOSE.1/4.LOW.PERM.FUEL.LN.18*	1	-
42	586337301	HARNESS *HARNESS.MAIN.RZ.WITHOUT.BRAKE*	1	-

ENGINE MOUNTING, GUARDS AND MUFFLER

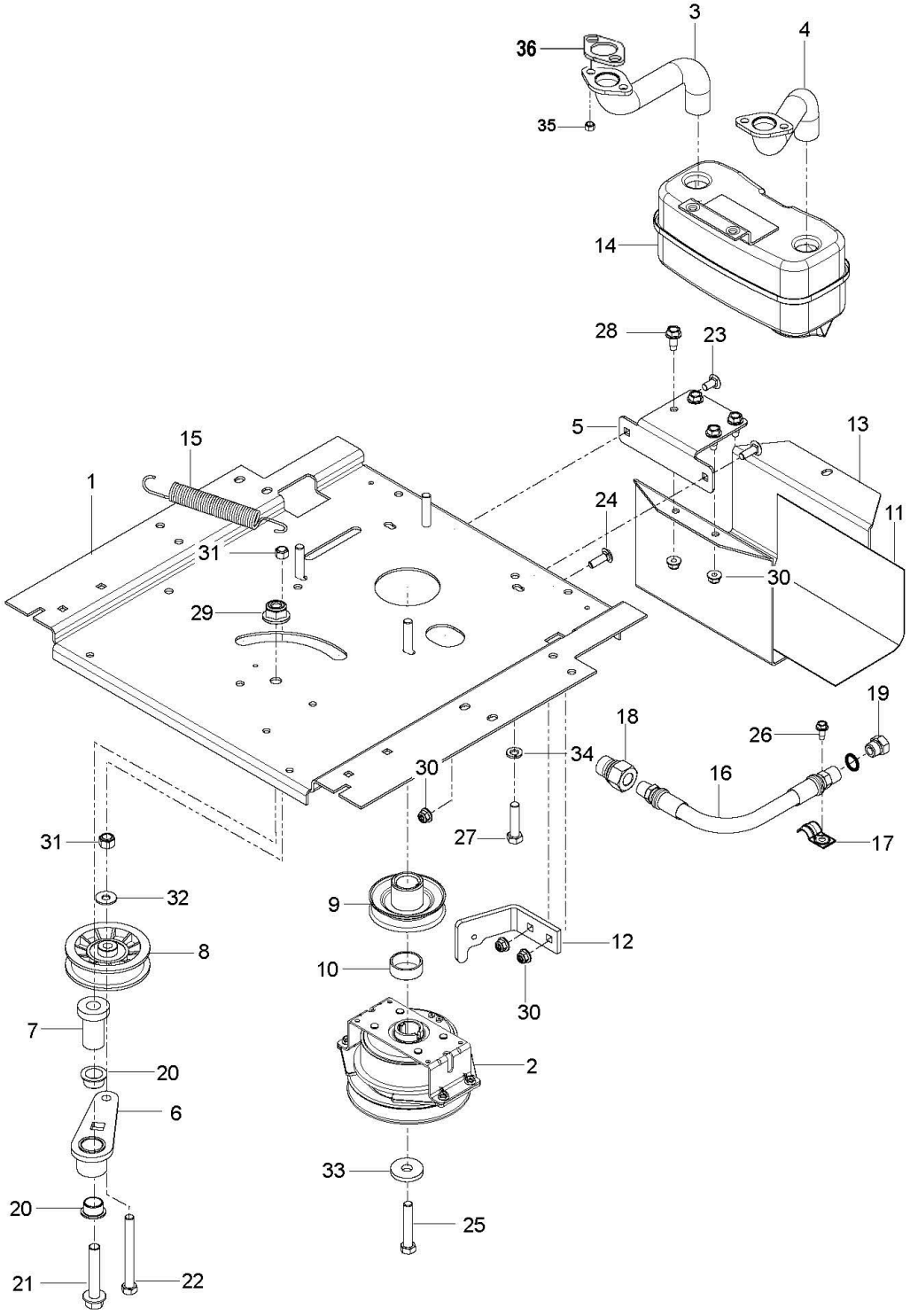

Ref.	Article N.	Description	Qty	Kit
1	536831102	DECAL *DECAL.ZTR.PKBRAKE.AMG.LH*	1	-
2	536831101	DECAL *DECAL.ZTR.INS.PKBRAKE.AMG.RH*	1	-
3	548309502	DECAL *DECAL.Z254FX*	2	-

Ref.	Article N.	Description	Qty	Kit
4	529527001	DECAL *DECAL.ZTR.WARNING.BATTERY.SYMB*	1	-
6	539108385	DECAL *DECAL.DO NOT TOW*	1	-
7	539108386	DECAL *DECAL, EXITING MOWER*	1	-
8	539109803	DECAL *DECAL.SERVICE.RZ.*	1	-
9	537449101	DECAL *DECAL.ZTR.Z200.INST.HUS.AMG.EN*	1	-
12	590810801	DECAL *DECAL.TR/ZTR.DECKWARN.CC.BLK*	1	-
13	589357902	DECAL *DECAL.DECK.CLEARCUT.NOSTEP*	2	-
14	546540701	DECAL *DECAL.ZTR.BLTROUTING.3BLADE*	1	-
15	577469001	DECAL *DECAL.HUSQVARNA.210MM*	1	-
17	537450103	DECAL *DECAL.DECK.54:CLEARCUT.BLACK*	1	-
18	584904602	DECAL *DECAL.DECK.DEFLECTOR.WARN*	1	-
19	529405301	DECAL *DECAL.BUILTINAMERICA.HUSQ*	1	-
20	591357301	DECAL *DECAL.LOGO.SEATPLATE.RZ.ZTR.HU*	1	-
21	532428677	DECAL *BADGE.CROWN.DECAL*	1	-
1	598736102	PLATE *PLATE.ENG.23RZ.MS431*	1	-
2	581886702	BRACKET *BRACKET.PNT.MUFFLER.EDIP*	1	-
3	548529902	CLUTCH *CLUTCH.STOP.BLACK*	1	-
4	587451202	GUARD *GUARD.MUFFLER.WO.TOW.HITCH.BLK*	1	-
5	539132859	HEAT SHIELD *SHIELD, HEAT*	1	-
6	539131604	MUFFLER ASSY *MUFFLER.ASM.TWIN*	1	-
7	595901501	BOLT *BOLT.CUP.SQ.NCK.5/16-18 X 1.02*	2	-
8	595901601	BOLT	1	-

Ref.	Article N.	Description	Qty	Kit
		BOLT.CUP.5/16-18 X 3/4.CLR.ZNC		
9	596135901	BOLT *BOLT.HEX.5/16-18 X 3/4.CLR.ZNC*	4	-
10	594944401	NUT *NUT.HEX.FLNG.5/16-18.NYLOC.CLR*	5	-
11	532448145	ARM *ARM.IDLER*	1	-
12	501603701	BEARING *BEARING.FLANGED.PLASTIC.3/4ID*	2	-
13	582538902	SPINDLE *SPINDLE.IDLER.CLR.ZINC*	1	-
14	582539502	BOLT *BOLT.1/2-13X2.75 GRD5*	1	-
15	521991102	NUT *1/2-13.HEX.FLANGE.NYLOK*	1	-
16	532193197	PULLEY *PULLEY.PNT.IDLER 48PRIMARY*	1	-
17	532193197	PULLEY *PULLEY.IDLER.48PRIMARY*	1	-
18	596433901	SCREW *SCREW.HEX.3/8-16 X 3.54.CLR*	1	-
19	596134901	WASHER *WASHER.PLAIN.3/8 X 7/8*	2	-
20	596240901	NUT *NUT.PREVAIL.3/8-16 X .564*	2	-
21	532196105	SPRING *SPRING.DRIVE.DECK.2006*	1	-
22	587537401	PULLEY *PULLEY.ENGINE*	1	-
23	548504501	SPACER *SPACER.SPACER.1.125.W/OGURA*	1	-
24	592821701	CLUTCH *CLUTCH.OGURA.GT1,5-EH17(D)*	1	-
25	532126197	WASHER *WASHER.1-1/2 ODX15/32 IDX.250*	1	-
26	581332804	BOLT *BOLT.CLUTCH.7/16-20X3.5.GRADE5*	1	-
27	596564402	BOLT *BOLT.HEX.HEAD.3/8-16 X 1-1/4*	4	-
28	596238701	WASHER *WASHER.SPRING.LOCK.381IDX.680*	4	-
29	583955601	TUBE *TUBE EXHAUST LEFT KAWA TWIN*	1	-

Ref.	Article N.	Description	Qty	Kit
30	583955701	TUBE *TUBE EXHAUST RIGHT KAWA TWIN*	1	-
31	532178151	GASKET *GASKET.EXHAUST.KAWASAKI*	2	-
32	532184362	NUT *NUT.HEX.FLANGE.TOPLOCK.M8-1.25*	4	-
33	532131563	COVER *COVER.TERMINAL.RED*	1	-
34	596031501	LOCK NUT *LOCK.NUT.188 X.218.CLEAR.ZINC*	1	-
35	532148456	TUBE *TUBE.EASY_OIL_DRAIN*	1	-
1	585039803	GUARD *GUARD.ENG.HUSQ.RZ.AM.GRY.X685*	1	-
2	589283302	FRAME TUBE *FRAME.TUBE.RZ.MAIN.WELD.LH.ORG*	1	-
3	589283402	FRAME TUBE *FRAME.TUBE.RZ.MAIN.WELD.RH.ORG*	1	-
4	584991002	TUBE *TUBE.FRAME.RR.HUSQ.23.RZ.ORG*	1	-
5	598712402	PLATE KIT *PLATE.RZ.FOOTREST.AM.GREY.X685*	1	-
6	586703802	FRONT COVER *FRONT.COVER.RZ.FOOTREST.RF.685*	1	-
7	529365102	SUPPORT *SUPPORT.RZ.FOOTREST.PLATE.X431*	1	-
8	587546902	SCREW *SCREW.ASM.5/16-18.ADJ.ISO.TAP*	1	-
9	585916701	LIGHT *LIGHT.ZTR.LED.ASM*	1	-
10	587225201	GROMMET *GROMMET.RUBBER.PUSHIN*	2	-
11	585989301	BUMPER *GROMMET.BUMPER*	7	-
12	585523104	CROSS MEMBER *CROSS.PNT.MEMBER.BLK*	1	-
13	587458602	BRACKET *BRACKET.SKIDPLTE.LED.RFRSHX417*	1	-
14	585331502	COVER *COVER.RAIL.LH.RZ.x668*	1	-
15	585331602	COVER *COVER.RAIL.RH.RZ.x668*	1	-
16	597783101	KNOB	1	-

Ref.	Article N.	Description	Qty	Kit
		KNOB.3WING.5/16-18.CLR.ZN		
17	585474302	BRACKET *ROD.BYPASS.EZT.X431*	2	-
18	593682604	SUPPORT *SUPPORT.RZ.LH.CONSOLE.BLK*	1	-
19	580501302	BRACKET *FENDER.SUPPORT.PNT.X431*	2	-
20	593118304	SUPPORT *SUPPORT.RZ.CONSOLE.RH.MS431*	1	-
21	586654302	BOLT *BOLT.SHOULDER.3/8-16X3.GR5 CLR*	2	-
22	586881101	BOLT *BOLT.5/16-18.THRD.ROLL.SHOULDR*	2	-
23	817000510	BOLT *BOLT.5/16-18HEX.WHS.HD.LCKSERR*	7	-
24	595316601	BOLT *BOLT.HHD FLNG 5/16-18X2.75 GR5*	3	-
25	596564405	BOLT *BOLT.HEX.HEAD.3/8-16 X 3*	8	-
26	574233802	SCREW *HHFS.5/16 X 2.25 GD5.CLR.ZINC*	8	-
27	577117702	BOLT *HHFS.3/8-16 X 3.GR5.CLEAR.ZINC*	4	-
28	596321701	SCREW *SCREW.#10 X 0.750.BOS.THREAD*	6	-
29	817580520	BOLT *SCREW.THDROL.5/16-18X1.25 TYTT*	2	-
30	596434001	SCREW *SCREW.#10X0.500.BOS.THREAD*	2	-
31	521996502	NUT *NUT.HEX.LOCK.W/FLANGE.3/8-16*	14	-
32	594944401	NUT *NUT.HEX.FLNG.5/16-18.NYLOC.CLR*	16	-
34	595901901	NUT *NUT.7/16-14.GR5.CLR.ZINC*	2	-
36	532423063	WASHER *PALNUT.5/16*	1	-
39	593842101	BUSHING *BUSHING*	2	-
40	521938102	LINK *LINK.FRINT.SUSP.CLEAR.ZINC*	1	-
41	595901901	NUT *NUT.7/16-14.GR5.CLR.ZINC*	2	-

Ref.	Article N.	Description	Qty	Kit
42	586548101	HARNESS *HARNESS.LED.LIGHT.RZ*	1	-
1	548325202	TRANSMISSION *TRANSMISSION.EZT.SHORT.20.RT*	1	-
2	548325201	TRANSMISSION *TRANSMISSION.EZT.SHORT.20.LT*	1	-
3	580806602	BRACKET *BRACKET.EZT.MOUNT.REAR.PNTX431*	2	-
4	595316601	BOLT *BOLT.HHD FLNG 5/16-18X2.75 GR5*	4	-
5	594944401	NUT *NUT.HEX.FLNG.5/16-18.NYLOC.CLR*	6	-
6	593852803	SPACER *SPACER.TUBE.EZT.6.810*	2	-
7	596581901	BOLT *BOLT.HEXAGON.3/8-16 X 2-1/2*	4	-
8	596565301	WASHER *WASHER;3/8X0.08IN.ST.CLR.ZINC*	4	-
9	596238701	WASHER *WASHER.SPRING.LOCK.381IDX.680*	4	-
10	580806502	SUPPORT *SUPPORT.FRONT.TRANS.PNTX431*	2	-
11	574233802	SCREW *HHFS.5/16 X 2.25 GD5.CLR.ZINC*	2	-
12	596930401	LINKAGE *LINKAGE.BRAKE.LT.CLR.ZINC*	1	-
13	596930701	LINKAGE *LINKAGE.BRAKE.RH.CLR.ZINC*	1	-
14	587115301	PIN *PIN.CLEVIS.3/16X.475*	1	-
15	587225301	PIN *PIN COTTER;LOCKING;BOWTIE;1IN*	1	-
16	596299801	SPRING *SPRING.BRAKE.ROD.CLEAR.ZINC*	2	-
17	595086601	NUT *NUT.HEX.1/4-20 ST ZPB*	2	-
18	596582301	WASHER *WASHER 0.28 X 0.63 CLR.ZN*	4	-
19	585474402	ROD *ROD.BYPASS.LH.EZT.CLEAR.ZINC*	1	-
20	585474502	ROD *ROD.BYPASS.RH.EZT.CLEAR.ZINC*	1	-
21	596580601	PIN	4	-

Ref.	Article N.	Description	Qty	Kit
		PIN.RETAINING.1-7/16 X 0.073		
22	586665101	SPRING *SPRING.ROD.BYPASS.EZT*	2	-
23	587653903	NUT *NUT.1/2-20UNF-2B.1/2-20X3/4GR8*	8	-
24	539110411	DRIVE BELT *Drive BELT, EZT'S*	1	-
1	596327001	SERVICE KIT *DECK.54CC.WELDMT.RZ*	1	-
2	592951801	DRIVE BELT	1	-
3	582760502	BLADE *BLADE.54CC.HI-LIFT.PZ.165.431*	3	-
4	590304407	COVER *COVER.PNT.54CC.MDRL.LH.ZTR.GRY*	1	-
5	590304207	COVER *COVER.PNT.54CC.MANDREL.RH.GREY*	1	-
6	534214702	HOUSING ASSY *HOUSING.ASM.NO-GREASE.CASTIRON*	3	-
7	589527301	WHEEL *WHEEL.GAUGE.WIDE(RALLY)*	4	-
8	574169601	ROLLER *ROLLER, GAUGE .635 BORE*	2	-
9	532175708	PULLEY ASSY *PULLEY.MANDREL.CRD 107CM.DOM.*	3	-
10	532197379	PULLEY *PULLEY.IDLER.4,5.X431*	2	-
11	532197380	PULLEY *PULLEY.IDLER.4,5.SPACER.X431*	1	-
12	590632204	DEFLECTOR ASSY *DEFLECTOR.ASM.54CC.RES.BLACK*	1	-
13	595297001	ROD *ROD.HINGE*	1	-
14	585323901	BEARING *BEARING.MANDREL.TOP.EXTENDED*	3	-
15	582219602	ARM *ARM.PNT.IDLER.CLEARCUT.54.EDIP*	1	-
16	536050602	LINK *ARM.FIXED.MOWER.SUSP.X431*	2	-
17	532415598	HOSE COUPLING *PORT.WASHOUT*	1	-
18	532416405	COUPLING *COUPLING.QUICK-CONNECT*	1	-
19	596482001	SPRING	2	-

Ref.	Article N.	Description	Qty	Kit
		SPRING.CLEAR.ZINC		
20	587354701	SPRING *SPRING.DEFLECTOR*	1	-
21	532197251	SPRING *USE FOR SERIAL # STARTING 02012025*000000 & AFTER*	1	-
21	587358401	SPRING *SPRING.EXTN.42FCS.TR.DECK.DRV*	1	-
22	574196502	TUBE *TUBE.ROLLER.AXLE.LONG.CLR.ZINC*	1	-
23	587256501	SHAFT *SHAFT ASM.MNDRL.N/GREASEABLE*	3	-
24	589813301	PLUG *PLUG.TREE..203HOLE.BLK*	3	-
25	590732501	BUMPER ASSY *BUMPER.ASM.54CC.TRIMSIDE.HUSQ*	1	-
26	532194209	SPRING *PIN.COTTER.7/16.BOW TIE LOCK*	2	-
27	593824001	STUD *STUD.W/DANTI-ROTATION*	2	-
28	532170165	BOLT *BOLT.SHOULDER.5/16-18 TT*	2	-
29	596434404	BOLT *BOLT.SHOULDER.3/8-16X3-5/8*	4	-
30	584309301	SCREW *SCREW.SEMS.7/16-20X1.HEX.HEAD*	3	-
31	596240801	BOLT *BOLT.EYELET.5/16-18 X 3-1/2*	1	-
32	584953901	BOLT *BOLT.HEX.WSHRHD.313-18X1.19*	12	-
33	596136301	BOLT *BOLT.CUP.HEAD.3/8-16 X 2*	1	-
34	594944501	BOLT *BLT.CUP.HD.SQR.1/2-13X8.0 G5*	1	-
35	532196539	BOLT *BOLT.SHOULDER*	2	-
36	532137729	SCREW *SCREW.THD.ROLL.1/4-20 X 5/8*	9	-
37	599972501	BOLT *BOLT.HEX.GR8.CLR.Zn*	1	-
38	588438301	SCREW *SCREW.7/16-14 X 2.125.WASHER*	1	-
39	596134801	HEXAGON NUT *NUT.HEX.9/16-18 X 1.010*	3	-

Ref.	Article N.	Description	Qty	Kit
40	873900600	NUT *NUT.LOCK.FLG.3/8-16UNC*	5	-
41	521991102	NUT *1/2-13.HEX.FLANGE.NYLOK*	1	-
42	596039201	LOCK NUT *NUT.SER.FLANGE.LOCKNUT.5/16-18*	2	-
43	596135701	LOCK NUT *NUT.LOCK.PRVL.TORQ.5/16-18X.68*	2	-
44	532110452	NUT *NUT.PUSH.PIN.HINGE.PHOS.&.OIL*	1	-
45	532178515	WASHER *WASHER.FLAT.HARDENED*	1	-
47	819191912	WASHER *WASHER.1-5/32 X 19/32 X 12GA*	2	-
48	598752001	MANDREL *MANDREL.CAST.IRON*	3	-
49	521938102	LINK *LINK.FRINT.SUSP.CLEAR.ZINC*	1	-
1	586429702	SHAFT ASSY *SHAFT ASSY*	1	-
2	586457101	LINK *LINK*	1	-
3	586457201	LINK *LINK*	1	-
4	587622901	LIFTING LEVER ASSY *LIFTING LEVER ASSY*	1	-
5	580486102	SPACER *SPACER*	2	-
6	585682102	BRACKET *BRACKET*	2	-
7	587623001	LINK ASSY *LINK ASSY*	2	-
7	596766601	LINK ARM ASSY *LINK*	2	-
8	525847202	LINK *LINK ASSY*	2	-
9	587140502	ARM *ARM*	2	-
10	587623001	LINK ASSY *LINK ASSY*	2	-
11	532411555	GRIP *GRIP*	2	-
12	586867601	SPRING	4	-

Ref.	Article N.	Description	Qty	Kit
		SPRING		
13	532196314	SPRING *SPRING*	1	-
14	596482001	SPRING *SPRING*	2	-
15	593824001	STUD *STUD*	2	-
16	532194208	PIN *PIN*	2	-
17	587225301	PIN *PIN*	4	-
18	532194209	SPRING *SPRING*	1	-
19	510184901	BUSHING *BUSHING*	2	-
20	585701401	PIN *PIN*	2	-
21	532194209	SPRING *SPRING*	2	-
22	585682001	ROD *ROD*	2	-
23	586457401	BELLCRANK *BELLCRANK*	1	-
24	586457501	BELLCRANK *BELLCRANK*	1	-
25	532196539	BOLT *BOLT*	2	-
26	586561301	SCREW *SCREW*	2	-
27	532137729	SCREW *SCREW*	2	-
28	596135701	LOCK NUT *NUT*	2	-
30	589464902	NUT *NUT*	2	-
31	596320001	WASHER *WASHER*	2	-
32	596565301	WASHER *WASHER*	2	-
33	812000002	RETAINER RING *RETAINER RING*	1	-
1	548323801	SEAT *SEAT.18.LOW.PROFILE.SUSPENSION*	1	-

Ref.	Article N.	Description	Qty	Kit
1	540603801	SEAT *FOR 97084740100, 97084750100*	1	-
2	598001601	SERVICE KIT *PLATE.MOUNTING.SK121.EDIP*	1	-
3	586220802	SUPPORT PLATE *PLATE.SUPPORT.DECK.LIFT*	1	-
4	586221202	PLATE *PLATE.DECK.LIFT.X431*	1	-
5	597160003	PLATE *PLATE.SEAT.SUPPORT.RZ.RVS.X668*	1	-
6	580308202	SUPPORT *SUPPORT.REAR.SEAT.PNT431*	2	-
7	873970500	NUT *NUT.LOCK.HEX.FLANGE*	4	-
9	539132140	SWITCH *SEAT.SWITCH*	1	-
9	540670401	SWITCH *FOR 97084740100, 97084750100*	1	-
11	586428601	SUPPORT LEG *SUPPORT.LEG.DECK.LIFT*	1	-
12	585989301	BUMPER *GROMMET.BUMPER*	2	-
13	539104763	CLIP *CLIP*	5	-
14	539990316	BOLT *BOLT*	4	-
15	510422701	SCREW *SCREW*	2	-
18	596240701	BOLT *BOLT*	2	-
19	874490512	BOLT *BOLT*	4	-
20	817000510	BOLT *BOLT*	6	-
21	594944401	NUT *NUT*	2	-
22	521996502	NUT *NUT.FLANGE.*	2	-
26	597869301	BOLT *BOLT.CARRI.SQUR.3/8X.45.CLR Zn*	2	-
28	597330002	BRACKET *BRCKT.SEAT.PIVOT.SK121.RZ.X431*	1	-
34	597553401	BUMPER	2	-

Ref.	Article N.	Description	Qty	Kit
		BUMPER.3/8-16.INTERNAL THREAD		
1	598851703	TUBE *TUBE.RZ.LEVER.W/GRIP.RT X428*	1	-
2	598851704	TUBE *TUBE.RZ.LEVER.W/GRIP.LT X428*	1	-
3	585124705	BRACKET *BRACKET.CONTROLS.ZTR.E-DIP*	2	-
4	539131518	BEARING *BEARING, FLANGE*	2	-
5	576140301	LEVER *LEVER.CONTROL*	2	-
6	587601703	LEVER *CNTRL.LEVER.*	2	-
7	584927201	SPACER *SPACER.PIVOT.CONTROL*	2	-
8	539102720	GAS SPRING *DAMPENER*	2	-
9	547930201	BLOCK *BLOCK.TRACKING.CONTROL.REC.BLK*	2	-
12	588604902	ROD *ROD.ASM.RH.ADJUSTABLE.*	1	-
13	588605002	ROD *ROD.ASM.LH.ADJUSTABLE.*	1	-
14	537602401	CLIP *CLIP.R-CLIP*	2	-
15	587601501	SWITCH *SWITCH.INTLK.RZ.RFRSH.BUTTON*	2	-
16	596434301	BOLT *BOLT.HX.1/2-13 X 2-3/4.CLR.ZNC*	2	-
17	585986101	BOLT *SCREW.SHAKEPROOF.1.25.BLACK*	2	-
18	592858702	BOLT *BOLT.5/16-18X.75.HEX.FLANGE*	8	-
19	596580801	BOLT *BOLT.HEX.SCREW.5/16-18 X 1*	2	-
20	587885301	SCREW *SCREW.CAP.SOCKET.6PT.5/16-18*	2	-
21	525544002	BOLT *BOLT.HEXAGON.HEAD.5/16-18X1.25*	4	-
22	574822701	SCREW *SCR #10-24 X .75 SKT HD BLK ZN*	2	-
23	539108010	NUT *NUT 1/2-13HX JM NYL INST GR2ZN*	2	-

Ref.	Article N.	Description	Qty	Kit
24	594944401	NUT *NUT.HEX.FLNG.5/16-18.NYLOC.CLR*	10	-
25	596583702	NUT *NUT.HEX.5/16-18.NYLOC.BLK_ZINC*	4	-
26	596039201	LOCK NUT *NUT.SER.FLANGE.LOCKNUT.5/16-18*	4	-
27	532423063	WASHER	1	-
1	536856401	WHEEL ASSY *WHEEL.ASM.K3012.20x10.BLACK*	2	-
2	580830801	WHEEL ASSY *WHEEL.ASSY.FRONT.CASTER.11X6-5*	2	-
2	595910102	WHEEL ASSY *FOR 97084740100, 97084750100*	1	-
3	586650310	YOKE *YOKE.CASTER.ASM.6.AM.GRY.X685*	2	-
4	596623501	VALVE *VALVE.ZERK.1/2.DRIVE IN*	2	-
5	539103300	NIPPLE *VALVE.ZERK.1/4*	2	-
6	539112660	BEARING *BEARING, FLANGED*	2	-
7	539117901	BLADE BUSHING *CASTER BUSHING*	2	-
8	595281301	CAP *CAP GREASE*	2	-
9	596301001	PLUG *PLUG.CASTER.CLEAR.ZINC*	2	-
10	585995401	SPACER *SPACER.PIVOT*	2	-
11	596388901	SPRING *SPRING.CASTER.CLEAR.ZINC*	2	-
12	596319901	SCREW *SCREW.HEX.5/16-18 X 1 GR5*	2	-
13	576601503	SCREW *BOLT.RHSNB; 1/2-13 X 7.5*	2	-
14	521991103	NUT *NUT.LOCK 1/2-13 NYLOK.BLK.Zn*	2	-
15	587653903	NUT *NUT.1/2-20UNF-2B.1/2-20X3/4GR8*	8	-
16	596319801	WASHER *WASHER.1.025 X 1.625 X 0.063*	2	-
1	598602606	CONSOLE ASSY *CONSOLE.ASM.RZ.RH.AMG.MS685*	1	-

Ref.	Article N.	Description	Qty	Kit
2	586621203	CONSOLE ASSY *CONSOLE.RZ.REFRESH.LH.MS685*	1	-
3	531016704	FUEL TANK ASSY *FUEL.TANK.ASM.RZ.2.25 2024*	1	-
4	529979701	HARNESS *FUEL.CAP.VENTED.BLK*	1	-
5	597873201	THROTTLE *THROTTLE.CABLE.ASSY 39*	1	-
6	586881503	CHOKE CONTROL ASSY *CHOKE.CONTROL.ASM.PUSH-IN*	1	-
7	539107541	IGNITION SWITCH *IGNITION SWITCH*	1	-
8	582107602	SWITCH *SWITCH.PTO.8TERMINAL.STD.RED*	1	-
9	587601501	SWITCH *SWITCH.INTLK.RZ.RFRSH.BUTTON*	2	-
11	585522709	CONTROL PANEL *CONTROL.PANEL.RZ.REFSH.AM.GRY*	1	-
12	532163465	BATTERY *BATTERY.12VOLT.28AMP.WET*	1	-
13	593634404	BRACKET *BRACKET.PNT.BATTERY.MOUNT.EDIP*	1	-
14	582609602	BOX *BOX.PNT.BATTERY.RZ.EDIP*	1	-
15	532131563	COVER *COVER.TERMINAL.RED*	2	-
16	539102759	INSULATOR *INSULATOR-BATTERY*	1	-
17	576618101	TANK VENT *VALVE, FUEL CHECK*	1	-
18	586123906	FUEL HOSE *FUEL.HOSE.SHUT.OFF.ASM.10.18*	1	-
19	582042802	SOLENOID *SOLENOID W/BRASS.PLUNGER.Zn*	1	-
20	587198601	HARNESS *HARNESS.BTTRY.CABLE.RZ.REFRESH*	1	-
21	587044550	HOSE *HOSE.3/16.VAPOR.LINE.50LGTH*	1	-
22	547159601	GROMMET *VITON.GROMMET.FUEL.OUTLET*	1	-
23	584648201	GROMMET *GOMMET.FUEL.CHECK.VALVE*	1	-
24	532139277	NIPPLE	1	-

Ref.	Article N.	Description	Qty	Kit
		ELBOW.FUEL.TANK		
25	594919101	HOUR METER *HOURMETER.SRVMINDER.RECT*	1	-
26	532411935	KEY *IGNITION.KEY*	1	-
27	586108201	HARNESS *CABLE.BATTERY.POS.RZ*	1	-
28	588839401	HOOK *HOOK.J.BATTERY*	2	-
29	545227101	SCREW *SCREW.#6.PLASTITE*	2	-
30	596789701	SCREW *SCR.HEX.1/4-20X5/8*	1	-
31	532141841	SCREW *SCREW.10-16X0.650*	2	-
32	574822701	SCREW *SCREW.SAFETY.SWITCH*	2	-
33	595316801	BOLT *BOLT.BATTERY.BOX*	2	-
34	874760412	BOLT *BOLT.HEX.HD.1/4-20UNC X 3/4*	2	-
35	596135801	BOLT *BOLT.CONSOLE.*	2	-
36	596133601	LOCK NUT *LOCKNUT.KEPS.1/4-20*	2	-
37	521996502	NUT *NUT.BATTERY.BOX*	2	-
38	595086601	NUT *NUT.HEX.1/4-20 ST ZPB*	5	-
39	532123487	HOSE CLAMP *CLAMP.HOSE.BLK*	4	-
40	587044810	HOSE *HOSE.1/4.LOW.PERM.FUEL.LN.10*	1	-
41	587044818	HOSE *HOSE.1/4.LOW.PERM.FUEL.LN.18*	1	-
42	586337301	HARNESS *HARNESS.MAIN.RZ.WITHOUT.BRAKE*	1	-

FRAME

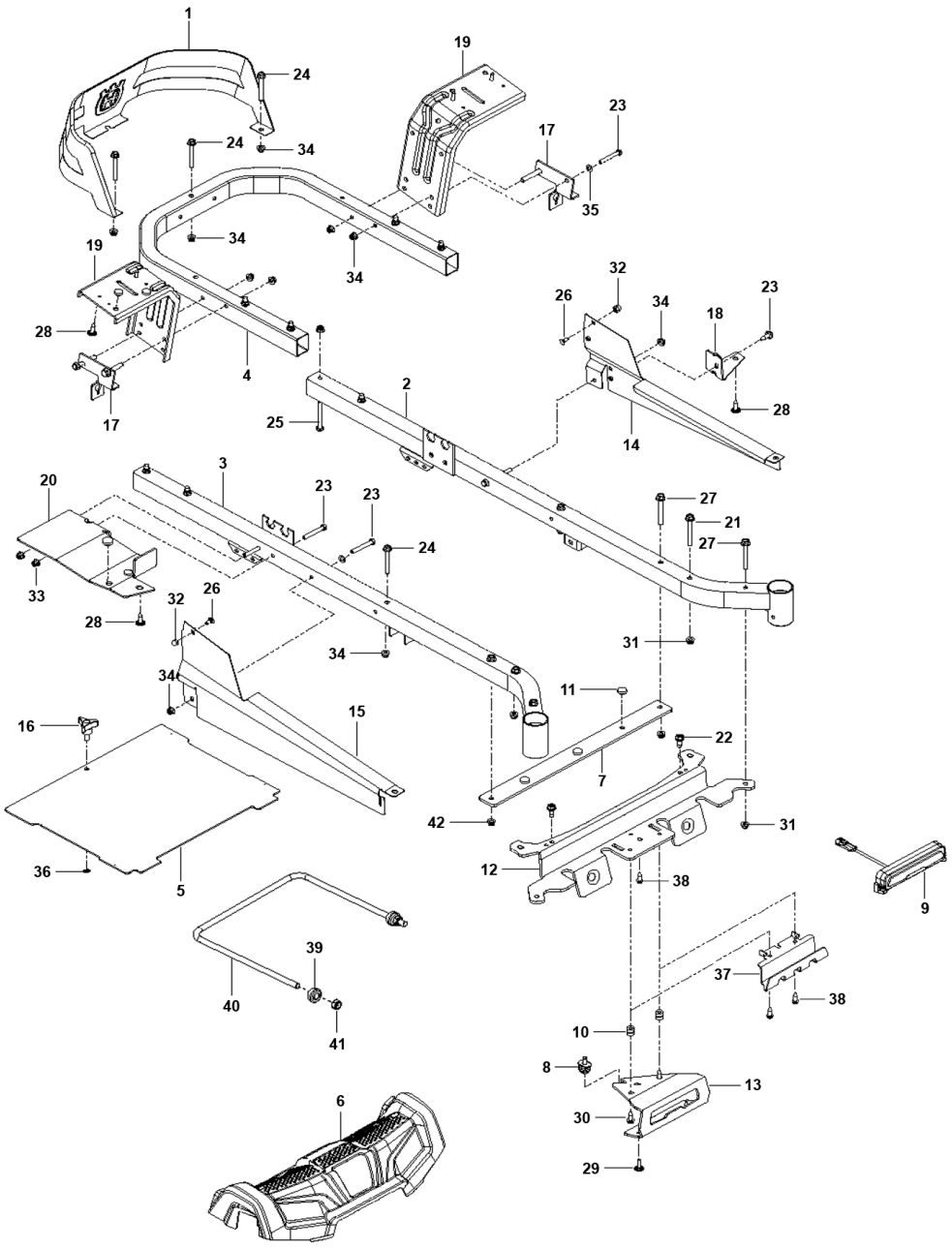

Ref.	Article N.	Description	Qty	Kit
1	536831102	DECAL *DECAL.ZTR.PKBRAKE.AMG.LH*	1	-
2	536831101	DECAL *DECAL.ZTR.INS.PKBRAKE.AMG.RH*	1	-
3	548309502	DECAL *DECAL.Z254FX*	2	-

Ref.	Article N.	Description	Qty	Kit
4	529527001	DECAL *DECAL.ZTR.WARNING.BATTERY.SYMB*	1	-
6	539108385	DECAL *DECAL.DO NOT TOW*	1	-
7	539108386	DECAL *DECAL, EXITING MOWER*	1	-
8	539109803	DECAL *DECAL.SERVICE.RZ.*	1	-
9	537449101	DECAL *DECAL.ZTR.Z200.INST.HUS.AMG.EN*	1	-
12	590810801	DECAL *DECAL.TR/ZTR.DECKWARN.CC.BLK*	1	-
13	589357902	DECAL *DECAL.DECK.CLEARCUT.NOSTEP*	2	-
14	546540701	DECAL *DECAL.ZTR.BLTROUTING.3BLADE*	1	-
15	577469001	DECAL *DECAL.HUSQVARNA.210MM*	1	-
17	537450103	DECAL *DECAL.DECK.54:CLEARCUT.BLACK*	1	-
18	584904602	DECAL *DECAL.DECK.DEFLECTOR.WARN*	1	-
19	529405301	DECAL *DECAL.BUILTINAMERICA.HUSQ*	1	-
20	591357301	DECAL *DECAL.LOGO.SEATPLATE.RZ.ZTR.HU*	1	-
21	532428677	DECAL *BADGE.CROWN.DECAL*	1	-
1	598736102	PLATE *PLATE.ENG.23RZ.MS431*	1	-
2	581886702	BRACKET *BRACKET.PNT.MUFFLER.EDIP*	1	-
3	548529902	CLUTCH *CLUTCH.STOP.BLACK*	1	-
4	587451202	GUARD *GUARD.MUFFLER.WO.TOW.HITCH.BLK*	1	-
5	539132859	HEAT SHIELD *SHIELD, HEAT*	1	-
6	539131604	MUFFLER ASSY *MUFFLER.ASM.TWIN*	1	-
7	595901501	BOLT *BOLT.CUP.SQ.NCK.5/16-18 X 1.02*	2	-
8	595901601	BOLT	1	-

Ref.	Article N.	Description	Qty	Kit
		BOLT.CUP.5/16-18 X 3/4.CLR.ZNC		
9	596135901	BOLT *BOLT.HEX.5/16-18 X 3/4.CLR.ZNC*	4	-
10	594944401	NUT *NUT.HEX.FLNG.5/16-18.NYLOC.CLR*	5	-
11	532448145	ARM *ARM.IDLER*	1	-
12	501603701	BEARING *BEARING.FLANGED.PLASTIC.3/4ID*	2	-
13	582538902	SPINDLE *SPINDLE.IDLER.CLR.ZINC*	1	-
14	582539502	BOLT *BOLT.1/2-13X2.75 GRD5*	1	-
15	521991102	NUT *1/2-13.HEX.FLANGE.NYLOK*	1	-
16	532193197	PULLEY *PULLEY.PNT.IDLER 48PRIMARY*	1	-
17	532193197	PULLEY *PULLEY.IDLER.48PRIMARY*	1	-
18	596433901	SCREW *SCREW.HEX.3/8-16 X 3.54.CLR*	1	-
19	596134901	WASHER *WASHER.PLAIN.3/8 X 7/8*	2	-
20	596240901	NUT *NUT.PREVAIL.3/8-16 X .564*	2	-
21	532196105	SPRING *SPRING.DRIVE.DECK.2006*	1	-
22	587537401	PULLEY *PULLEY.ENGINE*	1	-
23	548504501	SPACER *SPACER.SPACER.1.125.W/OGURA*	1	-
24	592821701	CLUTCH *CLUTCH.OGURA.GT1,5-EH17(D)*	1	-
25	532126197	WASHER *WASHER.1-1/2 ODX15/32 IDX.250*	1	-
26	581332804	BOLT *BOLT.CLUTCH.7/16-20X3.5.GRADE5*	1	-
27	596564402	BOLT *BOLT.HEX.HEAD.3/8-16 X 1-1/4*	4	-
28	596238701	WASHER *WASHER.SPRING.LOCK.381IDX.680*	4	-
29	583955601	TUBE *TUBE EXHAUST LEFT KAWA TWIN*	1	-

Ref.	Article N.	Description	Qty	Kit
30	583955701	TUBE *TUBE EXHAUST RIGHT KAWA TWIN*	1	-
31	532178151	GASKET *GASKET.EXHAUST.KAWASAKI*	2	-
32	532184362	NUT *NUT.HEX.FLANGE.TOPLOCK.M8-1.25*	4	-
33	532131563	COVER *COVER.TERMINAL.RED*	1	-
34	596031501	LOCK NUT *LOCK.NUT.188 X.218.CLEAR.ZINC*	1	-
35	532148456	TUBE *TUBE.EASY_OIL_DRAIN*	1	-
1	585039803	GUARD *GUARD.ENG.HUSQ.RZ.AM.GRY.X685*	1	-
2	589283302	FRAME TUBE *FRAME.TUBE.RZ.MAIN.WELD.LH.ORG*	1	-
3	589283402	FRAME TUBE *FRAME.TUBE.RZ.MAIN.WELD.RH.ORG*	1	-
4	584991002	TUBE *TUBE.FRAME.RR.HUSQ.23.RZ.ORG*	1	-
5	598712402	PLATE KIT *PLATE.RZ.FOOTREST.AM.GREY.X685*	1	-
6	586703802	FRONT COVER *FRONT.COVER.RZ.FOOTREST.RF.685*	1	-
7	529365102	SUPPORT *SUPPORT.RZ.FOOTREST.PLATE.X431*	1	-
8	587546902	SCREW *SCREW.ASM.5/16-18.ADJ.ISO.TAP*	1	-
9	585916701	LIGHT *LIGHT.ZTR.LED.ASM*	1	-
10	587225201	GROMMET *GROMMET.RUBBER.PUSHIN*	2	-
11	585989301	BUMPER *GROMMET.BUMPER*	7	-
12	585523104	CROSS MEMBER *CROSS.PNT.MEMBER.BLK*	1	-
13	587458602	BRACKET *BRACKET.SKIDPLTE.LED.RFRSHX417*	1	-
14	585331502	COVER *COVER.RAIL.LH.RZ.x668*	1	-
15	585331602	COVER *COVER.RAIL.RH.RZ.x668*	1	-
16	597783101	KNOB	1	-

Ref.	Article N.	Description	Qty	Kit
		KNOB.3WING.5/16-18.CLR.ZN		
17	585474302	BRACKET *ROD.BYPASS.EZT.X431*	2	-
18	593682604	SUPPORT *SUPPORT.RZ.LH.CONSOLE.BLK*	1	-
19	580501302	BRACKET *FENDER.SUPPORT.PNT.X431*	2	-
20	593118304	SUPPORT *SUPPORT.RZ.CONSOLE.RH.MS431*	1	-
21	586654302	BOLT *BOLT.SHOULDER.3/8-16X3.GR5 CLR*	2	-
22	586881101	BOLT *BOLT.5/16-18.THRD.ROLL.SHOULDR*	2	-
23	817000510	BOLT *BOLT.5/16-18HEX.WHS.HD.LCKSERR*	7	-
24	595316601	BOLT *BOLT.HHD FLNG 5/16-18X2.75 GR5*	3	-
25	596564405	BOLT *BOLT.HEX.HEAD.3/8-16 X 3*	8	-
26	574233802	SCREW *HHFS.5/16 X 2.25 GD5.CLR.ZINC*	8	-
27	577117702	BOLT *HHFS.3/8-16 X 3.GR5.CLEAR.ZINC*	4	-
28	596321701	SCREW *SCREW.#10 X 0.750.BOS.THREAD*	6	-
29	817580520	BOLT *SCREW.THDROL.5/16-18X1.25 TYTT*	2	-
30	596434001	SCREW *SCREW.#10X0.500.BOS.THREAD*	2	-
31	521996502	NUT *NUT.HEX.LOCK.W/FLANGE.3/8-16*	14	-
32	594944401	NUT *NUT.HEX.FLNG.5/16-18.NYLOC.CLR*	16	-
34	595901901	NUT *NUT.7/16-14.GR5.CLR.ZINC*	2	-
36	532423063	WASHER *PALNUT.5/16*	1	-
39	593842101	BUSHING *BUSHING*	2	-
40	521938102	LINK *LINK.FRINT.SUSP.CLEAR.ZINC*	1	-
41	595901901	NUT *NUT.7/16-14.GR5.CLR.ZINC*	2	-

Ref.	Article N.	Description	Qty	Kit
42	586548101	HARNESS *HARNESS.LED.LIGHT.RZ*	1	-
1	548325202	TRANSMISSION *TRANSMISSION.EZT.SHORT.20.RT*	1	-
2	548325201	TRANSMISSION *TRANSMISSION.EZT.SHORT.20.LT*	1	-
3	580806602	BRACKET *BRACKET.EZT.MOUNT.REAR.PNTX431*	2	-
4	595316601	BOLT *BOLT.HHD FLNG 5/16-18X2.75 GR5*	4	-
5	594944401	NUT *NUT.HEX.FLNG.5/16-18.NYLOC.CLR*	6	-
6	593852803	SPACER *SPACER.TUBE.EZT.6.810*	2	-
7	596581901	BOLT *BOLT.HEXAGON.3/8-16 X 2-1/2*	4	-
8	596565301	WASHER *WASHER;3/8X0.08IN.ST.CLR.ZINC*	4	-
9	596238701	WASHER *WASHER.SPRING.LOCK.381IDX.680*	4	-
10	580806502	SUPPORT *SUPPORT.FRONT.TRANS.PNTX431*	2	-
11	574233802	SCREW *HHFS.5/16 X 2.25 GD5.CLR.ZINC*	2	-
12	596930401	LINKAGE *LINKAGE.BRAKE.LT.CLR.ZINC*	1	-
13	596930701	LINKAGE *LINKAGE.BRAKE.RH.CLR.ZINC*	1	-
14	587115301	PIN *PIN.CLEVIS.3/16X.475*	1	-
15	587225301	PIN *PIN COTTER;LOCKING;BOWTIE;1IN*	1	-
16	596299801	SPRING *SPRING.BRAKE.ROD.CLEAR.ZINC*	2	-
17	595086601	NUT *NUT.HEX.1/4-20 ST ZPB*	2	-
18	596582301	WASHER *WASHER 0.28 X 0.63 CLR.ZN*	4	-
19	585474402	ROD *ROD.BYPASS.LH.EZT.CLEAR.ZINC*	1	-
20	585474502	ROD *ROD.BYPASS.RH.EZT.CLEAR.ZINC*	1	-
21	596580601	PIN	4	-

Ref.	Article N.	Description	Qty	Kit
		PIN.RETAINING.1-7/16 X 0.073		
22	586665101	SPRING *SPRING.ROD.BYPASS.EZT*	2	-
23	587653903	NUT *NUT.1/2-20UNF-2B.1/2-20X3/4GR8*	8	-
24	539110411	DRIVE BELT *Drive BELT, EZT'S*	1	-
1	596327001	SERVICE KIT *DECK.54CC.WELDMT.RZ*	1	-
2	592951801	DRIVE BELT	1	-
3	582760502	BLADE *BLADE.54CC.HI-LIFT.PZ.165.431*	3	-
4	590304407	COVER *COVER.PNT.54CC.MDRL.LH.ZTR.GRY*	1	-
5	590304207	COVER *COVER.PNT.54CC.MANDREL.RH.GREY*	1	-
6	534214702	HOUSING ASSY *HOUSING.ASM.NO-GREASE.CASTIRON*	3	-
7	589527301	WHEEL *WHEEL.GAUGE.WIDE(RALLY)*	4	-
8	574169601	ROLLER *ROLLER, GAUGE .635 BORE*	2	-
9	532175708	PULLEY ASSY *PULLEY.MANDREL.CRD 107CM.DOM.*	3	-
10	532197379	PULLEY *PULLEY.IDLER.4,5.X431*	2	-
11	532197380	PULLEY *PULLEY.IDLER.4,5.SPACER.X431*	1	-
12	590632204	DEFLECTOR ASSY *DEFLECTOR.ASM.54CC.RES.BLACK*	1	-
13	595297001	ROD *ROD.HINGE*	1	-
14	585323901	BEARING *BEARING.MANDREL.TOP.EXTENDED*	3	-
15	582219602	ARM *ARM.PNT.IDLER.CLEARCUT.54.EDIP*	1	-
16	536050602	LINK *ARM.FIXED.MOWER.SUSP.X431*	2	-
17	532415598	HOSE COUPLING *PORT.WASHOUT*	1	-
18	532416405	COUPLING *COUPLING.QUICK-CONNECT*	1	-
19	596482001	SPRING	2	-

Ref.	Article N.	Description	Qty	Kit
		SPRING.CLEAR.ZINC		
20	587354701	SPRING *SPRING.DEFLECTOR*	1	-
21	532197251	SPRING *USE FOR SERIAL # STARTING 02012025*000000 & AFTER*	1	-
21	587358401	SPRING *SPRING.EXTN.42FCS.TR.DECK.DRV*	1	-
22	574196502	TUBE *TUBE.ROLLER.AXLE.LONG.CLR.ZINC*	1	-
23	587256501	SHAFT *SHAFT ASM.MNDRL.N/GREASEABLE*	3	-
24	589813301	PLUG *PLUG.TREE..203HOLE.BLK*	3	-
25	590732501	BUMPER ASSY *BUMPER.ASM.54CC.TRIMSIDE.HUSQ*	1	-
26	532194209	SPRING *PIN.COTTER.7/16.BOW TIE LOCK*	2	-
27	593824001	STUD *STUD.W/DANTI-ROTATION*	2	-
28	532170165	BOLT *BOLT.SHOULDER.5/16-18 TT*	2	-
29	596434404	BOLT *BOLT.SHOULDER.3/8-16X3-5/8*	4	-
30	584309301	SCREW *SCREW.SEMS.7/16-20X1.HEX.HEAD*	3	-
31	596240801	BOLT *BOLT.EYELET.5/16-18 X 3-1/2*	1	-
32	584953901	BOLT *BOLT.HEX.WSHRHD.313-18X1.19*	12	-
33	596136301	BOLT *BOLT.CUP.HEAD.3/8-16 X 2*	1	-
34	594944501	BOLT *BLT.CUP.HD.SQR.1/2-13X8.0 G5*	1	-
35	532196539	BOLT *BOLT.SHOULDER*	2	-
36	532137729	SCREW *SCREW.THD.ROLL.1/4-20 X 5/8*	9	-
37	599972501	BOLT *BOLT.HEX.GR8.CLR.Zn*	1	-
38	588438301	SCREW *SCREW.7/16-14 X 2.125.WASHER*	1	-
39	596134801	HEXAGON NUT *NUT.HEX.9/16-18 X 1.010*	3	-

Ref.	Article N.	Description	Qty	Kit
40	873900600	NUT *NUT.LOCK.FLG.3/8-16UNC*	5	-
41	521991102	NUT *1/2-13.HEX.FLANGE.NYLOK*	1	-
42	596039201	LOCK NUT *NUT.SER.FLANGE.LOCKNUT.5/16-18*	2	-
43	596135701	LOCK NUT *NUT.LOCK.PRVL.TORQ.5/16-18X.68*	2	-
44	532110452	NUT *NUT.PUSH.PIN.HINGE.PHOS.&.OIL*	1	-
45	532178515	WASHER *WASHER.FLAT.HARDENED*	1	-
47	819191912	WASHER *WASHER.1-5/32 X 19/32 X 12GA*	2	-
48	598752001	MANDREL *MANDREL.CAST.IRON*	3	-
49	521938102	LINK *LINK.FRINT.SUSP.CLEAR.ZINC*	1	-
1	586429702	SHAFT ASSY *SHAFT ASSY*	1	-
2	586457101	LINK *LINK*	1	-
3	586457201	LINK *LINK*	1	-
4	587622901	LIFTING LEVER ASSY *LIFTING LEVER ASSY*	1	-
5	580486102	SPACER *SPACER*	2	-
6	585682102	BRACKET *BRACKET*	2	-
7	587623001	LINK ASSY *LINK ASSY*	2	-
7	596766601	LINK ARM ASSY *LINK*	2	-
8	525847202	LINK *LINK ASSY*	2	-
9	587140502	ARM *ARM*	2	-
10	587623001	LINK ASSY *LINK ASSY*	2	-
11	532411555	GRIP *GRIP*	2	-
12	586867601	SPRING	4	-

Ref.	Article N.	Description	Qty	Kit
		SPRING		
13	532196314	SPRING *SPRING*	1	-
14	596482001	SPRING *SPRING*	2	-
15	593824001	STUD *STUD*	2	-
16	532194208	PIN *PIN*	2	-
17	587225301	PIN *PIN*	4	-
18	532194209	SPRING *SPRING*	1	-
19	510184901	BUSHING *BUSHING*	2	-
20	585701401	PIN *PIN*	2	-
21	532194209	SPRING *SPRING*	2	-
22	585682001	ROD *ROD*	2	-
23	586457401	BELLCRANK *BELLCRANK*	1	-
24	586457501	BELLCRANK *BELLCRANK*	1	-
25	532196539	BOLT *BOLT*	2	-
26	586561301	SCREW *SCREW*	2	-
27	532137729	SCREW *SCREW*	2	-
28	596135701	LOCK NUT *NUT*	2	-
30	589464902	NUT *NUT*	2	-
31	596320001	WASHER *WASHER*	2	-
32	596565301	WASHER *WASHER*	2	-
33	812000002	RETAINER RING *RETAINER RING*	1	-
1	548323801	SEAT *SEAT.18.LOW.PROFILE.SUSPENSION*	1	-

Ref.	Article N.	Description	Qty	Kit
1	540603801	SEAT *FOR 97084740100, 97084750100*	1	-
2	598001601	SERVICE KIT *PLATE.MOUNTING.SK121.EDIP*	1	-
3	586220802	SUPPORT PLATE *PLATE.SUPPORT.DECK.LIFT*	1	-
4	586221202	PLATE *PLATE.DECK.LIFT.X431*	1	-
5	597160003	PLATE *PLATE.SEAT.SUPPORT.RZ.RVS.X668*	1	-
6	580308202	SUPPORT *SUPPORT.REAR.SEAT.PNT431*	2	-
7	873970500	NUT *NUT.LOCK.HEX.FLANGE*	4	-
9	539132140	SWITCH *SEAT.SWITCH*	1	-
9	540670401	SWITCH *FOR 97084740100, 97084750100*	1	-
11	586428601	SUPPORT LEG *SUPPORT.LEG.DECK.LIFT*	1	-
12	585989301	BUMPER *GROMMET.BUMPER*	2	-
13	539104763	CLIP *CLIP*	5	-
14	539990316	BOLT *BOLT*	4	-
15	510422701	SCREW *SCREW*	2	-
18	596240701	BOLT *BOLT*	2	-
19	874490512	BOLT *BOLT*	4	-
20	817000510	BOLT *BOLT*	6	-
21	594944401	NUT *NUT*	2	-
22	521996502	NUT *NUT.FLANGE.*	2	-
26	597869301	BOLT *BOLT.CARRI.SQUR.3/8X.45.CLR Zn*	2	-
28	597330002	BRACKET *BRCKT.SEAT.PIVOT.SK121.RZ.X431*	1	-
34	597553401	BUMPER	2	-

Ref.	Article N.	Description	Qty	Kit
		BUMPER.3/8-16.INTERNAL THREAD		
1	598851703	TUBE *TUBE.RZ.LEVER.W/GRIP.RT X428*	1	-
2	598851704	TUBE *TUBE.RZ.LEVER.W/GRIP.LT X428*	1	-
3	585124705	BRACKET *BRACKET.CONTROLS.ZTR.E-DIP*	2	-
4	539131518	BEARING *BEARING, FLANGE*	2	-
5	576140301	LEVER *LEVER.CONTROL*	2	-
6	587601703	LEVER *CNTRL.LEVER.*	2	-
7	584927201	SPACER *SPACER.PIVOT.CONTROL*	2	-
8	539102720	GAS SPRING *DAMPENER*	2	-
9	547930201	BLOCK *BLOCK.TRACKING.CONTROL.REC.BLK*	2	-
12	588604902	ROD *ROD.ASM.RH.ADJUSTABLE.*	1	-
13	588605002	ROD *ROD.ASM.LH.ADJUSTABLE.*	1	-
14	537602401	CLIP *CLIP.R-CLIP*	2	-
15	587601501	SWITCH *SWITCH.INTLK.RZ.RFRSH.BUTTON*	2	-
16	596434301	BOLT *BOLT.HX.1/2-13 X 2-3/4.CLR.ZNC*	2	-
17	585986101	BOLT *SCREW.SHAKEPROOF.1.25.BLACK*	2	-
18	592858702	BOLT *BOLT.5/16-18X.75.HEX.FLANGE*	8	-
19	596580801	BOLT *BOLT.HEX.SCREW.5/16-18 X 1*	2	-
20	587885301	SCREW *SCREW.CAP.SOCKET.6PT.5/16-18*	2	-
21	525544002	BOLT *BOLT.HEXAGON.HEAD.5/16-18X1.25*	4	-
22	574822701	SCREW *SCR #10-24 X .75 SKT HD BLK ZN*	2	-
23	539108010	NUT *NUT 1/2-13HX JM NYL INST GR2ZN*	2	-

Ref.	Article N.	Description	Qty	Kit
24	594944401	NUT *NUT.HEX.FLNG.5/16-18.NYLOC.CLR*	10	-
25	596583702	NUT *NUT.HEX.5/16-18.NYLOC.BLK_ZINC*	4	-
26	596039201	LOCK NUT *NUT.SER.FLANGE.LOCKNUT.5/16-18*	4	-
27	532423063	WASHER	1	-
1	536856401	WHEEL ASSY *WHEEL.ASM.K3012.20x10.BLACK*	2	-
2	580830801	WHEEL ASSY *WHEEL.ASSY.FRONT.CASTER.11X6-5*	2	-
2	595910102	WHEEL ASSY *FOR 97084740100, 97084750100*	1	-
3	586650310	YOKE *YOKE.CASTER.ASM.6.AM.GRY.X685*	2	-
4	596623501	VALVE *VALVE.ZERK.1/2.DRIVE IN*	2	-
5	539103300	NIPPLE *VALVE.ZERK.1/4*	2	-
6	539112660	BEARING *BEARING, FLANGED*	2	-
7	539117901	BLADE BUSHING *CASTER BUSHING*	2	-
8	595281301	CAP *CAP GREASE*	2	-
9	596301001	PLUG *PLUG.CASTER.CLEAR.ZINC*	2	-
10	585995401	SPACER *SPACER.PIVOT*	2	-
11	596388901	SPRING *SPRING.CASTER.CLEAR.ZINC*	2	-
12	596319901	SCREW *SCREW.HEX.5/16-18 X 1 GR5*	2	-
13	576601503	SCREW *BOLT.RHSNB; 1/2-13 X 7.5*	2	-
14	521991103	NUT *NUT.LOCK 1/2-13 NYLOK.BLK.Zn*	2	-
15	587653903	NUT *NUT.1/2-20UNF-2B.1/2-20X3/4GR8*	8	-
16	596319801	WASHER *WASHER.1.025 X 1.625 X 0.063*	2	-
1	598602606	CONSOLE ASSY *CONSOLE.ASM.RZ.RH.AMG.MS685*	1	-

Ref.	Article N.	Description	Qty	Kit
2	586621203	CONSOLE ASSY *CONSOLE.RZ.REFRESH.LH.MS685*	1	-
3	531016704	FUEL TANK ASSY *FUEL.TANK.ASM.RZ.2.25 2024*	1	-
4	529979701	HARNESS *FUEL.CAP.VENTED.BLK*	1	-
5	597873201	THROTTLE *THROTTLE.CABLE.ASSY 39*	1	-
6	586881503	CHOKE CONTROL ASSY *CHOKE.CONTROL.ASM.PUSH-IN*	1	-
7	539107541	IGNITION SWITCH *IGNITION SWITCH*	1	-
8	582107602	SWITCH *SWITCH.PTO.8TERMINAL.STD.RED*	1	-
9	587601501	SWITCH *SWITCH.INTLK.RZ.RFRSH.BUTTON*	2	-
11	585522709	CONTROL PANEL *CONTROL.PANEL.RZ.REFSH.AM.GRY*	1	-
12	532163465	BATTERY *BATTERY.12VOLT.28AMP.WET*	1	-
13	593634404	BRACKET *BRACKET.PNT.BATTERY.MOUNT.EDIP*	1	-
14	582609602	BOX *BOX.PNT.BATTERY.RZ.EDIP*	1	-
15	532131563	COVER *COVER.TERMINAL.RED*	2	-
16	539102759	INSULATOR *INSULATOR-BATTERY*	1	-
17	576618101	TANK VENT *VALVE, FUEL CHECK*	1	-
18	586123906	FUEL HOSE *FUEL.HOSE.SHUT.OFF.ASM.10.18*	1	-
19	582042802	SOLENOID *SOLENOID W/BRASS.PLUNGER.Zn*	1	-
20	587198601	HARNESS *HARNESS.BTTRY.CABLE.RZ.REFRESH*	1	-
21	587044550	HOSE *HOSE.3/16.VAPOR.LINE.50LGTH*	1	-
22	547159601	GROMMET *VITON.GROMMET.FUEL.OUTLET*	1	-
23	584648201	GROMMET *GOMMET.FUEL.CHECK.VALVE*	1	-
24	532139277	NIPPLE	1	-

Ref.	Article N.	Description	Qty	Kit
		ELBOW.FUEL.TANK		
25	594919101	HOUR METER *HOURMETER.SRVMINDER.RECT*	1	-
26	532411935	KEY *IGNITION.KEY*	1	-
27	586108201	HARNESS *CABLE.BATTERY.POS.RZ*	1	-
28	588839401	HOOK *HOOK.J.BATTERY*	2	-
29	545227101	SCREW *SCREW.#6.PLASTITE*	2	-
30	596789701	SCREW *SCR.HEX.1/4-20X5/8*	1	-
31	532141841	SCREW *SCREW.10-16X0.650*	2	-
32	574822701	SCREW *SCREW.SAFETY.SWITCH*	2	-
33	595316801	BOLT *BOLT.BATTERY.BOX*	2	-
34	874760412	BOLT *BOLT.HEX.HD.1/4-20UNC X 3/4*	2	-
35	596135801	BOLT *BOLT.CONSOLE.*	2	-
36	596133601	LOCK NUT *LOCKNUT.KEPS.1/4-20*	2	-
37	521996502	NUT *NUT.BATTERY.BOX*	2	-
38	595086601	NUT *NUT.HEX.1/4-20 ST ZPB*	5	-
39	532123487	HOSE CLAMP *CLAMP.HOSE.BLK*	4	-
40	587044810	HOSE *HOSE.1/4.LOW.PERM.FUEL.LN.10*	1	-
41	587044818	HOSE *HOSE.1/4.LOW.PERM.FUEL.LN.18*	1	-
42	586337301	HARNESS *HARNESS.MAIN.RZ.WITHOUT.BRAKE*	1	-

HYDRAULIC PUMP - MOTOR

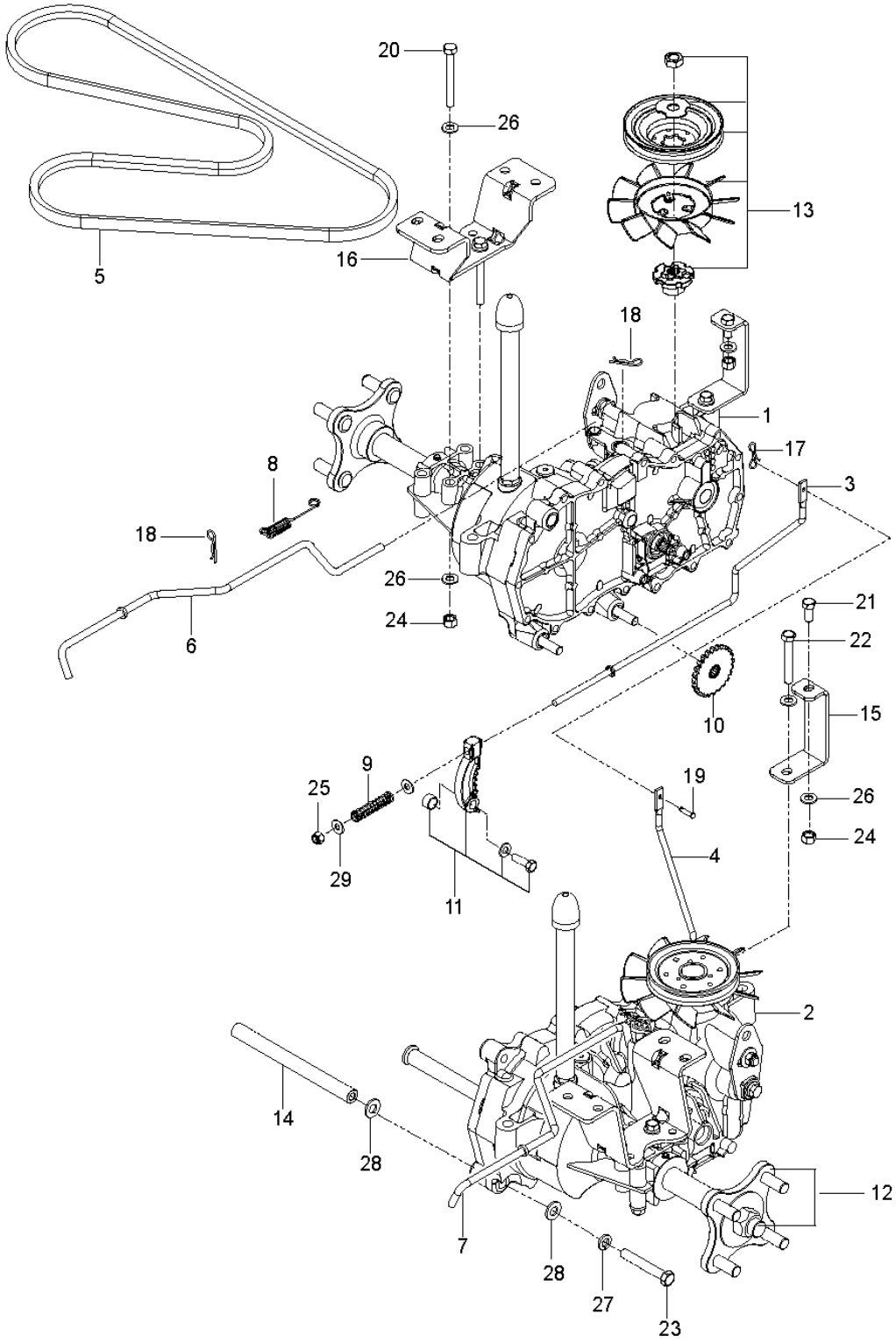

Ref.	Article N.	Description	Qty	Kit
1	536831102	DECAL *DECAL.ZTR.PKBRAKE.AMG.LH*	1	-
2	536831101	DECAL *DECAL.ZTR.INS.PKBRAKE.AMG.RH*	1	-
3	548309502	DECAL *DECAL.Z254FX*	2	-

Ref.	Article N.	Description	Qty	Kit
4	529527001	DECAL *DECAL.ZTR.WARNING.BATTERY.SYMB*	1	-
6	539108385	DECAL *DECAL.DO NOT TOW*	1	-
7	539108386	DECAL *DECAL, EXITING MOWER*	1	-
8	539109803	DECAL *DECAL.SERVICE.RZ.*	1	-
9	537449101	DECAL *DECAL.ZTR.Z200.INST.HUS.AMG.EN*	1	-
12	590810801	DECAL *DECAL.TR/ZTR.DECKWARN.CC.BLK*	1	-
13	589357902	DECAL *DECAL.DECK.CLEARCUT.NOSTEP*	2	-
14	546540701	DECAL *DECAL.ZTR.BLTROUTING.3BLADE*	1	-
15	577469001	DECAL *DECAL.HUSQVARNA.210MM*	1	-
17	537450103	DECAL *DECAL.DECK.54:CLEARCUT.BLACK*	1	-
18	584904602	DECAL *DECAL.DECK.DEFLECTOR.WARN*	1	-
19	529405301	DECAL *DECAL.BUILTINAMERICA.HUSQ*	1	-
20	591357301	DECAL *DECAL.LOGO.SEATPLATE.RZ.ZTR.HU*	1	-
21	532428677	DECAL *BADGE.CROWN.DECAL*	1	-
1	598736102	PLATE *PLATE.ENG.23RZ.MS431*	1	-
2	581886702	BRACKET *BRACKET.PNT.MUFFLER.EDIP*	1	-
3	548529902	CLUTCH *CLUTCH.STOP.BLACK*	1	-
4	587451202	GUARD *GUARD.MUFFLER.WO.TOW.HITCH.BLK*	1	-
5	539132859	HEAT SHIELD *SHIELD, HEAT*	1	-
6	539131604	MUFFLER ASSY *MUFFLER.ASM.TWIN*	1	-
7	595901501	BOLT *BOLT.CUP.SQ.NCK.5/16-18 X 1.02*	2	-
8	595901601	BOLT	1	-

Ref.	Article N.	Description	Qty	Kit
		BOLT.CUP.5/16-18 X 3/4.CLR.ZNC		
9	596135901	BOLT *BOLT.HEX.5/16-18 X 3/4.CLR.ZNC*	4	-
10	594944401	NUT *NUT.HEX.FLNG.5/16-18.NYLOC.CLR*	5	-
11	532448145	ARM *ARM.IDLER*	1	-
12	501603701	BEARING *BEARING.FLANGED.PLASTIC.3/4ID*	2	-
13	582538902	SPINDLE *SPINDLE.IDLER.CLR.ZINC*	1	-
14	582539502	BOLT *BOLT.1/2-13X2.75 GRD5*	1	-
15	521991102	NUT *1/2-13.HEX.FLANGE.NYLOK*	1	-
16	532193197	PULLEY *PULLEY.PNT.IDLER 48PRIMARY*	1	-
17	532193197	PULLEY *PULLEY.IDLER.48PRIMARY*	1	-
18	596433901	SCREW *SCREW.HEX.3/8-16 X 3.54.CLR*	1	-
19	596134901	WASHER *WASHER.PLAIN.3/8 X 7/8*	2	-
20	596240901	NUT *NUT.PREVAIL.3/8-16 X .564*	2	-
21	532196105	SPRING *SPRING.DRIVE.DECK.2006*	1	-
22	587537401	PULLEY *PULLEY.ENGINE*	1	-
23	548504501	SPACER *SPACER.SPACER.1.125.W/OGURA*	1	-
24	592821701	CLUTCH *CLUTCH.OGURA.GT1,5-EH17(D)*	1	-
25	532126197	WASHER *WASHER.1-1/2 ODX15/32 IDX.250*	1	-
26	581332804	BOLT *BOLT.CLUTCH.7/16-20X3.5.GRADE5*	1	-
27	596564402	BOLT *BOLT.HEX.HEAD.3/8-16 X 1-1/4*	4	-
28	596238701	WASHER *WASHER.SPRING.LOCK.381IDX.680*	4	-
29	583955601	TUBE *TUBE EXHAUST LEFT KAWA TWIN*	1	-

Ref.	Article N.	Description	Qty	Kit
30	583955701	TUBE *TUBE EXHAUST RIGHT KAWA TWIN*	1	-
31	532178151	GASKET *GASKET.EXHAUST.KAWASAKI*	2	-
32	532184362	NUT *NUT.HEX.FLANGE.TOPLOCK.M8-1.25*	4	-
33	532131563	COVER *COVER.TERMINAL.RED*	1	-
34	596031501	LOCK NUT *LOCK.NUT.188 X.218.CLEAR.ZINC*	1	-
35	532148456	TUBE *TUBE.EASY_OIL_DRAIN*	1	-
1	585039803	GUARD *GUARD.ENG.HUSQ.RZ.AM.GRY.X685*	1	-
2	589283302	FRAME TUBE *FRAME.TUBE.RZ.MAIN.WELD.LH.ORG*	1	-
3	589283402	FRAME TUBE *FRAME.TUBE.RZ.MAIN.WELD.RH.ORG*	1	-
4	584991002	TUBE *TUBE.FRAME.RR.HUSQ.23.RZ.ORG*	1	-
5	598712402	PLATE KIT *PLATE.RZ.FOOTREST.AM.GREY.X685*	1	-
6	586703802	FRONT COVER *FRONT.COVER.RZ.FOOTREST.RF.685*	1	-
7	529365102	SUPPORT *SUPPORT.RZ.FOOTREST.PLATE.X431*	1	-
8	587546902	SCREW *SCREW.ASM.5/16-18.ADJ.ISO.TAP*	1	-
9	585916701	LIGHT *LIGHT.ZTR.LED.ASM*	1	-
10	587225201	GROMMET *GROMMET.RUBBER.PUSHIN*	2	-
11	585989301	BUMPER *GROMMET.BUMPER*	7	-
12	585523104	CROSS MEMBER *CROSS.PNT.MEMBER.BLK*	1	-
13	587458602	BRACKET *BRACKET.SKIDPLTE.LED.RFRSHX417*	1	-
14	585331502	COVER *COVER.RAIL.LH.RZ.x668*	1	-
15	585331602	COVER *COVER.RAIL.RH.RZ.x668*	1	-
16	597783101	KNOB	1	-

Ref.	Article N.	Description	Qty	Kit
		KNOB.3WING.5/16-18.CLR.ZN		
17	585474302	BRACKET *ROD.BYPASS.EZT.X431*	2	-
18	593682604	SUPPORT *SUPPORT.RZ.LH.CONSOLE.BLK*	1	-
19	580501302	BRACKET *FENDER.SUPPORT.PNT.X431*	2	-
20	593118304	SUPPORT *SUPPORT.RZ.CONSOLE.RH.MS431*	1	-
21	586654302	BOLT *BOLT.SHOULDER.3/8-16X3.GR5 CLR*	2	-
22	586881101	BOLT *BOLT.5/16-18.THRD.ROLL.SHOULDR*	2	-
23	817000510	BOLT *BOLT.5/16-18HEX.WHS.HD.LCKSERR*	7	-
24	595316601	BOLT *BOLT.HHD FLNG 5/16-18X2.75 GR5*	3	-
25	596564405	BOLT *BOLT.HEX.HEAD.3/8-16 X 3*	8	-
26	574233802	SCREW *HHFS.5/16 X 2.25 GD5.CLR.ZINC*	8	-
27	577117702	BOLT *HHFS.3/8-16 X 3.GR5.CLEAR.ZINC*	4	-
28	596321701	SCREW *SCREW.#10 X 0.750.BOS.THREAD*	6	-
29	817580520	BOLT *SCREW.THDROL.5/16-18X1.25 TYTT*	2	-
30	596434001	SCREW *SCREW.#10X0.500.BOS.THREAD*	2	-
31	521996502	NUT *NUT.HEX.LOCK.W/FLANGE.3/8-16*	14	-
32	594944401	NUT *NUT.HEX.FLNG.5/16-18.NYLOC.CLR*	16	-
34	595901901	NUT *NUT.7/16-14.GR5.CLR.ZINC*	2	-
36	532423063	WASHER *PALNUT.5/16*	1	-
39	593842101	BUSHING *BUSHING*	2	-
40	521938102	LINK *LINK.FRINT.SUSP.CLEAR.ZINC*	1	-
41	595901901	NUT *NUT.7/16-14.GR5.CLR.ZINC*	2	-

Ref.	Article N.	Description	Qty	Kit
42	586548101	HARNESS *HARNESS.LED.LIGHT.RZ*	1	-
1	548325202	TRANSMISSION *TRANSMISSION.EZT.SHORT.20.RT*	1	-
2	548325201	TRANSMISSION *TRANSMISSION.EZT.SHORT.20.LT*	1	-
3	580806602	BRACKET *BRACKET.EZT.MOUNT.REAR.PNTX431*	2	-
4	595316601	BOLT *BOLT.HHD FLNG 5/16-18X2.75 GR5*	4	-
5	594944401	NUT *NUT.HEX.FLNG.5/16-18.NYLOC.CLR*	6	-
6	593852803	SPACER *SPACER.TUBE.EZT.6.810*	2	-
7	596581901	BOLT *BOLT.HEXAGON.3/8-16 X 2-1/2*	4	-
8	596565301	WASHER *WASHER;3/8X0.08IN.ST.CLR.ZINC*	4	-
9	596238701	WASHER *WASHER.SPRING.LOCK.381IDX.680*	4	-
10	580806502	SUPPORT *SUPPORT.FRONT.TRANS.PNTX431*	2	-
11	574233802	SCREW *HHFS.5/16 X 2.25 GD5.CLR.ZINC*	2	-
12	596930401	LINKAGE *LINKAGE.BRAKE.LT.CLR.ZINC*	1	-
13	596930701	LINKAGE *LINKAGE.BRAKE.RH.CLR.ZINC*	1	-
14	587115301	PIN *PIN.CLEVIS.3/16X.475*	1	-
15	587225301	PIN *PIN COTTER;LOCKING;BOWTIE;1IN*	1	-
16	596299801	SPRING *SPRING.BRAKE.ROD.CLEAR.ZINC*	2	-
17	595086601	NUT *NUT.HEX.1/4-20 ST ZPB*	2	-
18	596582301	WASHER *WASHER 0.28 X 0.63 CLR.ZN*	4	-
19	585474402	ROD *ROD.BYPASS.LH.EZT.CLEAR.ZINC*	1	-
20	585474502	ROD *ROD.BYPASS.RH.EZT.CLEAR.ZINC*	1	-
21	596580601	PIN	4	-

Ref.	Article N.	Description	Qty	Kit
		PIN.RETAINING.1-7/16 X 0.073		
22	586665101	SPRING *SPRING.ROD.BYPASS.EZT*	2	-
23	587653903	NUT *NUT.1/2-20UNF-2B.1/2-20X3/4GR8*	8	-
24	539110411	DRIVE BELT *Drive BELT, EZT'S*	1	-
1	596327001	SERVICE KIT *DECK.54CC.WELDMT.RZ*	1	-
2	592951801	DRIVE BELT	1	-
3	582760502	BLADE *BLADE.54CC.HI-LIFT.PZ.165.431*	3	-
4	590304407	COVER *COVER.PNT.54CC.MDRL.LH.ZTR.GRY*	1	-
5	590304207	COVER *COVER.PNT.54CC.MANDREL.RH.GREY*	1	-
6	534214702	HOUSING ASSY *HOUSING.ASM.NO-GREASE.CASTIRON*	3	-
7	589527301	WHEEL *WHEEL.GAUGE.WIDE(RALLY)*	4	-
8	574169601	ROLLER *ROLLER, GAUGE .635 BORE*	2	-
9	532175708	PULLEY ASSY *PULLEY.MANDREL.CRD 107CM.DOM.*	3	-
10	532197379	PULLEY *PULLEY.IDLER.4,5.X431*	2	-
11	532197380	PULLEY *PULLEY.IDLER.4,5.SPACER.X431*	1	-
12	590632204	DEFLECTOR ASSY *DEFLECTOR.ASM.54CC.RES.BLACK*	1	-
13	595297001	ROD *ROD.HINGE*	1	-
14	585323901	BEARING *BEARING.MANDREL.TOP.EXTENDED*	3	-
15	582219602	ARM *ARM.PNT.IDLER.CLEARCUT.54.EDIP*	1	-
16	536050602	LINK *ARM.FIXED.MOWER.SUSP.X431*	2	-
17	532415598	HOSE COUPLING *PORT.WASHOUT*	1	-
18	532416405	COUPLING *COUPLING.QUICK-CONNECT*	1	-
19	596482001	SPRING	2	-

Ref.	Article N.	Description	Qty	Kit
		SPRING.CLEAR.ZINC		
20	587354701	SPRING *SPRING.DEFLECTOR*	1	-
21	532197251	SPRING *USE FOR SERIAL # STARTING 02012025*000000 & AFTER*	1	-
21	587358401	SPRING *SPRING.EXTN.42FCS.TR.DECK.DRV*	1	-
22	574196502	TUBE *TUBE.ROLLER.AXLE.LONG.CLR.ZINC*	1	-
23	587256501	SHAFT *SHAFT ASM.MNDRL.N/GREASEABLE*	3	-
24	589813301	PLUG *PLUG.TREE..203HOLE.BLK*	3	-
25	590732501	BUMPER ASSY *BUMPER.ASM.54CC.TRIMSIDE.HUSQ*	1	-
26	532194209	SPRING *PIN.COTTER.7/16.BOW TIE LOCK*	2	-
27	593824001	STUD *STUD.W/DANTI-ROTATION*	2	-
28	532170165	BOLT *BOLT.SHOULDER.5/16-18 TT*	2	-
29	596434404	BOLT *BOLT.SHOULDER.3/8-16X3-5/8*	4	-
30	584309301	SCREW *SCREW.SEMS.7/16-20X1.HEX.HEAD*	3	-
31	596240801	BOLT *BOLT.EYELET.5/16-18 X 3-1/2*	1	-
32	584953901	BOLT *BOLT.HEX.WSHRHD.313-18X1.19*	12	-
33	596136301	BOLT *BOLT.CUP.HEAD.3/8-16 X 2*	1	-
34	594944501	BOLT *BLT.CUP.HD.SQR.1/2-13X8.0 G5*	1	-
35	532196539	BOLT *BOLT.SHOULDER*	2	-
36	532137729	SCREW *SCREW.THD.ROLL.1/4-20 X 5/8*	9	-
37	599972501	BOLT *BOLT.HEX.GR8.CLR.Zn*	1	-
38	588438301	SCREW *SCREW.7/16-14 X 2.125.WASHER*	1	-
39	596134801	HEXAGON NUT *NUT.HEX.9/16-18 X 1.010*	3	-

Ref.	Article N.	Description	Qty	Kit
40	873900600	NUT *NUT.LOCK.FLG.3/8-16UNC*	5	-
41	521991102	NUT *1/2-13.HEX.FLANGE.NYLOK*	1	-
42	596039201	LOCK NUT *NUT.SER.FLANGE.LOCKNUT.5/16-18*	2	-
43	596135701	LOCK NUT *NUT.LOCK.PRVL.TORQ.5/16-18X.68*	2	-
44	532110452	NUT *NUT.PUSH.PIN.HINGE.PHOS.&.OIL*	1	-
45	532178515	WASHER *WASHER.FLAT.HARDENED*	1	-
47	819191912	WASHER *WASHER.1-5/32 X 19/32 X 12GA*	2	-
48	598752001	MANDREL *MANDREL.CAST.IRON*	3	-
49	521938102	LINK *LINK.FRINT.SUSP.CLEAR.ZINC*	1	-
1	586429702	SHAFT ASSY *SHAFT ASSY*	1	-
2	586457101	LINK *LINK*	1	-
3	586457201	LINK *LINK*	1	-
4	587622901	LIFTING LEVER ASSY *LIFTING LEVER ASSY*	1	-
5	580486102	SPACER *SPACER*	2	-
6	585682102	BRACKET *BRACKET*	2	-
7	587623001	LINK ASSY *LINK ASSY*	2	-
7	596766601	LINK ARM ASSY *LINK*	2	-
8	525847202	LINK *LINK ASSY*	2	-
9	587140502	ARM *ARM*	2	-
10	587623001	LINK ASSY *LINK ASSY*	2	-
11	532411555	GRIP *GRIP*	2	-
12	586867601	SPRING	4	-

Ref.	Article N.	Description	Qty	Kit
		SPRING		
13	532196314	SPRING *SPRING*	1	-
14	596482001	SPRING *SPRING*	2	-
15	593824001	STUD *STUD*	2	-
16	532194208	PIN *PIN*	2	-
17	587225301	PIN *PIN*	4	-
18	532194209	SPRING *SPRING*	1	-
19	510184901	BUSHING *BUSHING*	2	-
20	585701401	PIN *PIN*	2	-
21	532194209	SPRING *SPRING*	2	-
22	585682001	ROD *ROD*	2	-
23	586457401	BELLCRANK *BELLCRANK*	1	-
24	586457501	BELLCRANK *BELLCRANK*	1	-
25	532196539	BOLT *BOLT*	2	-
26	586561301	SCREW *SCREW*	2	-
27	532137729	SCREW *SCREW*	2	-
28	596135701	LOCK NUT *NUT*	2	-
30	589464902	NUT *NUT*	2	-
31	596320001	WASHER *WASHER*	2	-
32	596565301	WASHER *WASHER*	2	-
33	812000002	RETAINER RING *RETAINER RING*	1	-
1	548323801	SEAT *SEAT.18.LOW.PROFILE.SUSPENSION*	1	-

Ref.	Article N.	Description	Qty	Kit
1	540603801	SEAT *FOR 97084740100, 97084750100*	1	-
2	598001601	SERVICE KIT *PLATE.MOUNTING.SK121.EDIP*	1	-
3	586220802	SUPPORT PLATE *PLATE.SUPPORT.DECK.LIFT*	1	-
4	586221202	PLATE *PLATE.DECK.LIFT.X431*	1	-
5	597160003	PLATE *PLATE.SEAT.SUPPORT.RZ.RVS.X668*	1	-
6	580308202	SUPPORT *SUPPORT.REAR.SEAT.PNT431*	2	-
7	873970500	NUT *NUT.LOCK.HEX.FLANGE*	4	-
9	539132140	SWITCH *SEAT.SWITCH*	1	-
9	540670401	SWITCH *FOR 97084740100, 97084750100*	1	-
11	586428601	SUPPORT LEG *SUPPORT.LEG.DECK.LIFT*	1	-
12	585989301	BUMPER *GROMMET.BUMPER*	2	-
13	539104763	CLIP *CLIP*	5	-
14	539990316	BOLT *BOLT*	4	-
15	510422701	SCREW *SCREW*	2	-
18	596240701	BOLT *BOLT*	2	-
19	874490512	BOLT *BOLT*	4	-
20	817000510	BOLT *BOLT*	6	-
21	594944401	NUT *NUT*	2	-
22	521996502	NUT *NUT.FLANGE.*	2	-
26	597869301	BOLT *BOLT.CARRI.SQUR.3/8X.45.CLR Zn*	2	-
28	597330002	BRACKET *BRCKT.SEAT.PIVOT.SK121.RZ.X431*	1	-
34	597553401	BUMPER	2	-

Ref.	Article N.	Description	Qty	Kit
		BUMPER.3/8-16.INTERNAL THREAD		
1	598851703	TUBE *TUBE.RZ.LEVER.W/GRIP.RT X428*	1	-
2	598851704	TUBE *TUBE.RZ.LEVER.W/GRIP.LT X428*	1	-
3	585124705	BRACKET *BRACKET.CONTROLS.ZTR.E-DIP*	2	-
4	539131518	BEARING *BEARING, FLANGE*	2	-
5	576140301	LEVER *LEVER.CONTROL*	2	-
6	587601703	LEVER *CNTRL.LEVER.*	2	-
7	584927201	SPACER *SPACER.PIVOT.CONTROL*	2	-
8	539102720	GAS SPRING *DAMPENER*	2	-
9	547930201	BLOCK *BLOCK.TRACKING.CONTROL.REC.BLK*	2	-
12	588604902	ROD *ROD.ASM.RH.ADJUSTABLE.*	1	-
13	588605002	ROD *ROD.ASM.LH.ADJUSTABLE.*	1	-
14	537602401	CLIP *CLIP.R-CLIP*	2	-
15	587601501	SWITCH *SWITCH.INTLK.RZ.RFRSH.BUTTON*	2	-
16	596434301	BOLT *BOLT.HX.1/2-13 X 2-3/4.CLR.ZNC*	2	-
17	585986101	BOLT *SCREW.SHAKEPROOF.1.25.BLACK*	2	-
18	592858702	BOLT *BOLT.5/16-18X.75.HEX.FLANGE*	8	-
19	596580801	BOLT *BOLT.HEX.SCREW.5/16-18 X 1*	2	-
20	587885301	SCREW *SCREW.CAP.SOCKET.6PT.5/16-18*	2	-
21	525544002	BOLT *BOLT.HEXAGON.HEAD.5/16-18X1.25*	4	-
22	574822701	SCREW *SCR #10-24 X .75 SKT HD BLK ZN*	2	-
23	539108010	NUT *NUT 1/2-13HX JM NYL INST GR2ZN*	2	-

Ref.	Article N.	Description	Qty	Kit
24	594944401	NUT *NUT.HEX.FLNG.5/16-18.NYLOC.CLR*	10	-
25	596583702	NUT *NUT.HEX.5/16-18.NYLOC.BLK_ZINC*	4	-
26	596039201	LOCK NUT *NUT.SER.FLANGE.LOCKNUT.5/16-18*	4	-
27	532423063	WASHER	1	-
1	536856401	WHEEL ASSY *WHEEL.ASM.K3012.20x10.BLACK*	2	-
2	580830801	WHEEL ASSY *WHEEL.ASSY.FRONT.CASTER.11X6-5*	2	-
2	595910102	WHEEL ASSY *FOR 97084740100, 97084750100*	1	-
3	586650310	YOKE *YOKE.CASTER.ASM.6.AM.GRY.X685*	2	-
4	596623501	VALVE *VALVE.ZERK.1/2.DRIVE IN*	2	-
5	539103300	NIPPLE *VALVE.ZERK.1/4*	2	-
6	539112660	BEARING *BEARING, FLANGED*	2	-
7	539117901	BLADE BUSHING *CASTER BUSHING*	2	-
8	595281301	CAP *CAP GREASE*	2	-
9	596301001	PLUG *PLUG.CASTER.CLEAR.ZINC*	2	-
10	585995401	SPACER *SPACER.PIVOT*	2	-
11	596388901	SPRING *SPRING.CASTER.CLEAR.ZINC*	2	-
12	596319901	SCREW *SCREW.HEX.5/16-18 X 1 GR5*	2	-
13	576601503	SCREW *BOLT.RHSNB; 1/2-13 X 7.5*	2	-
14	521991103	NUT *NUT.LOCK 1/2-13 NYLOK.BLK.Zn*	2	-
15	587653903	NUT *NUT.1/2-20UNF-2B.1/2-20X3/4GR8*	8	-
16	596319801	WASHER *WASHER.1.025 X 1.625 X 0.063*	2	-
1	598602606	CONSOLE ASSY *CONSOLE.ASM.RZ.RH.AMG.MS685*	1	-

Ref.	Article N.	Description	Qty	Kit
2	586621203	CONSOLE ASSY *CONSOLE.RZ.REFRESH.LH.MS685*	1	-
3	531016704	FUEL TANK ASSY *FUEL.TANK.ASM.RZ.2.25 2024*	1	-
4	529979701	HARNESS *FUEL.CAP.VENTED.BLK*	1	-
5	597873201	THROTTLE *THROTTLE.CABLE.ASSY 39*	1	-
6	586881503	CHOKE CONTROL ASSY *CHOKE.CONTROL.ASM.PUSH-IN*	1	-
7	539107541	IGNITION SWITCH *IGNITION SWITCH*	1	-
8	582107602	SWITCH *SWITCH.PTO.8TERMINAL.STD.RED*	1	-
9	587601501	SWITCH *SWITCH.INTLK.RZ.RFRSH.BUTTON*	2	-
11	585522709	CONTROL PANEL *CONTROL.PANEL.RZ.REFSH.AM.GRY*	1	-
12	532163465	BATTERY *BATTERY.12VOLT.28AMP.WET*	1	-
13	593634404	BRACKET *BRACKET.PNT.BATTERY.MOUNT.EDIP*	1	-
14	582609602	BOX *BOX.PNT.BATTERY.RZ.EDIP*	1	-
15	532131563	COVER *COVER.TERMINAL.RED*	2	-
16	539102759	INSULATOR *INSULATOR-BATTERY*	1	-
17	576618101	TANK VENT *VALVE, FUEL CHECK*	1	-
18	586123906	FUEL HOSE *FUEL.HOSE.SHUT.OFF.ASM.10.18*	1	-
19	582042802	SOLENOID *SOLENOID W/BRASS.PLUNGER.Zn*	1	-
20	587198601	HARNESS *HARNESS.BTTRY.CABLE.RZ.REFRESH*	1	-
21	587044550	HOSE *HOSE.3/16.VAPOR.LINE.50LGTH*	1	-
22	547159601	GROMMET *VITON.GROMMET.FUEL.OUTLET*	1	-
23	584648201	GROMMET *GOMMET.FUEL.CHECK.VALVE*	1	-
24	532139277	NIPPLE	1	-

Ref.	Article N.	Description	Qty	Kit
		ELBOW.FUEL.TANK		
25	594919101	HOUR METER *HOURMETER.SRVMINDER.RECT*	1	-
26	532411935	KEY *IGNITION.KEY*	1	-
27	586108201	HARNESS *CABLE.BATTERY.POS.RZ*	1	-
28	588839401	HOOK *HOOK.J.BATTERY*	2	-
29	545227101	SCREW *SCREW.#6.PLASTITE*	2	-
30	596789701	SCREW *SCR.HEX.1/4-20X5/8*	1	-
31	532141841	SCREW *SCREW.10-16X0.650*	2	-
32	574822701	SCREW *SCREW.SAFETY.SWITCH*	2	-
33	595316801	BOLT *BOLT.BATTERY.BOX*	2	-
34	874760412	BOLT *BOLT.HEX.HD.1/4-20UNC X 3/4*	2	-
35	596135801	BOLT *BOLT.CONSOLE.*	2	-
36	596133601	LOCK NUT *LOCKNUT.KEPS.1/4-20*	2	-
37	521996502	NUT *NUT.BATTERY.BOX*	2	-
38	595086601	NUT *NUT.HEX.1/4-20 ST ZPB*	5	-
39	532123487	HOSE CLAMP *CLAMP.HOSE.BLK*	4	-
40	587044810	HOSE *HOSE.1/4.LOW.PERM.FUEL.LN.10*	1	-
41	587044818	HOSE *HOSE.1/4.LOW.PERM.FUEL.LN.18*	1	-
42	586337301	HARNESS *HARNESS.MAIN.RZ.WITHOUT.BRAKE*	1	-

MOWER DECK \/ CUTTING DECK

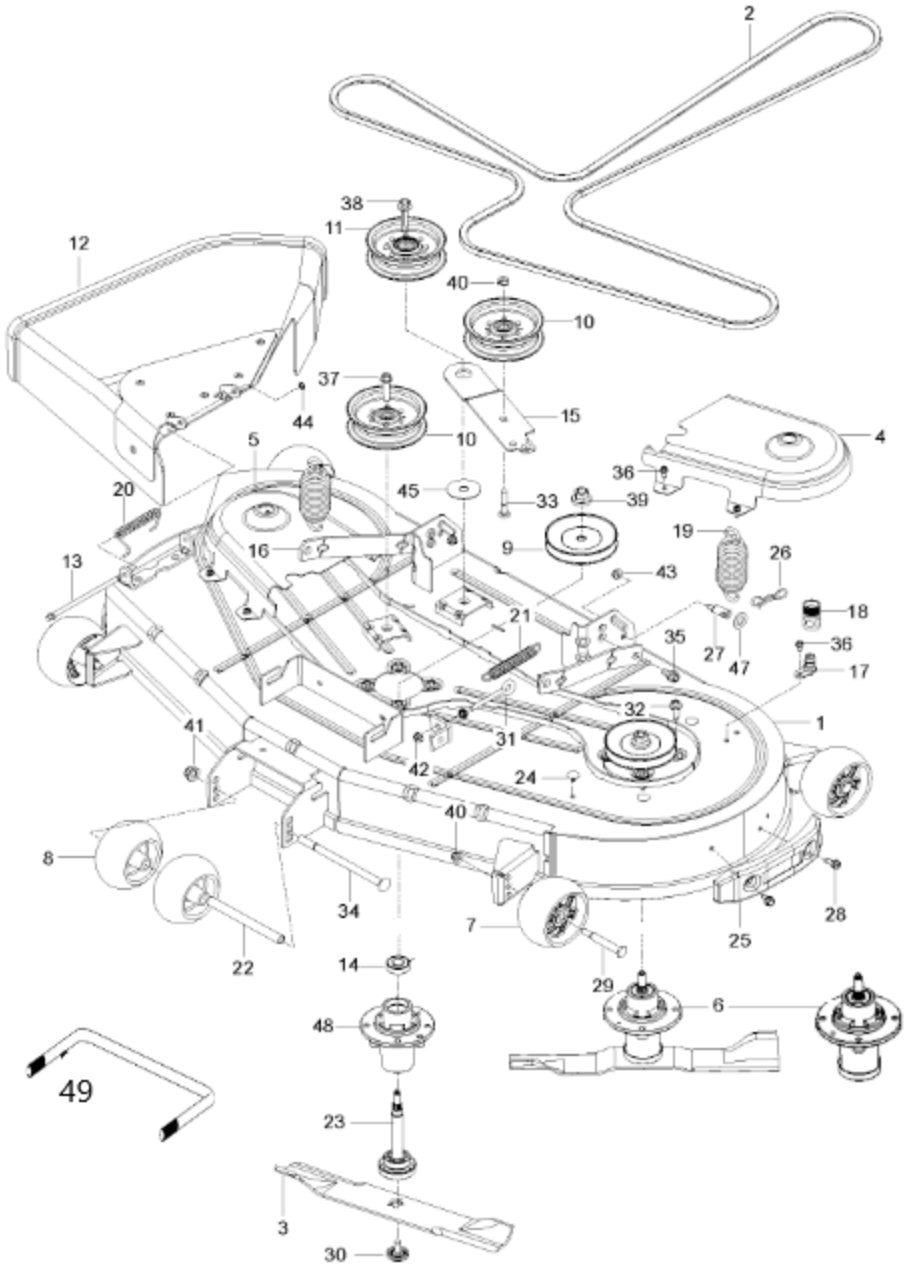

Ref.	Article N.	Description	Qty	Kit
1	536831102	DECAL *DECAL.ZTR.PKBRAKE.AMG.LH*	1	-
2	536831101	DECAL *DECAL.ZTR.INS.PKBRAKE.AMG.RH*	1	-
3	548309502	DECAL *DECAL.Z254FX*	2	-
4	529527001	DECAL *DECAL.ZTR.WARNING.BATTERY.SYMB*	1	-
6	539108385	DECAL *DECAL.DO NOT TOW*	1	-
7	539108386	DECAL	1	-

Ref.	Article N.	Description	Qty	Kit
		DECAL, EXITING MOWER		
8	539109803	DECAL *DECAL.SERVICE.RZ.*	1	-
9	537449101	DECAL *DECAL.ZTR.Z200.INST.HUS.AMG.EN*	1	-
12	590810801	DECAL *DECAL.TR/ZTR.DECKWARN.CC.BLK*	1	-
13	589357902	DECAL *DECAL.DECK.CLEARCUT.NOSTEP*	2	-
14	546540701	DECAL *DECAL.ZTR.BLTROUTING.3BLADE*	1	-
15	577469001	DECAL *DECAL.HUSQVARNA.210MM*	1	-
17	537450103	DECAL *DECAL.DECK.54:CLEARCUT.BLACK*	1	-
18	584904602	DECAL *DECAL.DECK.DEFLECTOR.WARN*	1	-
19	529405301	DECAL *DECAL.BUILTINAMERICA.HUSQ*	1	-
20	591357301	DECAL *DECAL.LOGO.SEATPLATE.RZ.ZTR.HU*	1	-
21	532428677	DECAL *BADGE.CROWN.DECAL*	1	-
1	598736102	PLATE *PLATE.ENG.23RZ.MS431*	1	-
2	581886702	BRACKET *BRACKET.PNT.MUFFLER.EDIP*	1	-
3	548529902	CLUTCH *CLUTCH.STOP.BLACK*	1	-
4	587451202	GUARD *GUARD.MUFFLER.WO.TOW.HITCH.BLK*	1	-
5	539132859	HEAT SHIELD *SHIELD, HEAT*	1	-
6	539131604	MUFFLER ASSY *MUFFLER.ASM.TWIN*	1	-
7	595901501	BOLT *BOLT.CUP.SQ.NCK.5/16-18 X 1.02*	2	-
8	595901601	BOLT *BOLT.CUP.5/16-18 X 3/4.CLR.ZNC*	1	-
9	596135901	BOLT *BOLT.HEX.5/16-18 X 3/4.CLR.ZNC*	4	-
10	594944401	NUT *NUT.HEX.FLNG.5/16-18.NYLOC.CLR*	5	-

Ref.	Article N.	Description	Qty	Kit
11	532448145	ARM *ARM.IDLER*	1	-
12	501603701	BEARING *BEARING.FLANGED.PLASTIC.3/4ID*	2	-
13	582538902	SPINDLE *SPINDLE.IDLER.CLR.ZINC*	1	-
14	582539502	BOLT *BOLT.1/2-13X2.75 GRD5*	1	-
15	521991102	NUT *1/2-13.HEX.FLANGE.NYLOK*	1	-
16	532193197	PULLEY *PULLEY.PNT.IDLER 48PRIMARY*	1	-
17	532193197	PULLEY *PULLEY.IDLER.48PRIMARY*	1	-
18	596433901	SCREW *SCREW.HEX.3/8-16 X 3.54.CLR*	1	-
19	596134901	WASHER *WASHER.PLAIN.3/8 X 7/8*	2	-
20	596240901	NUT *NUT.PREVAIL.3/8-16 X .564*	2	-
21	532196105	SPRING *SPRING.DRIVE.DECK.2006*	1	-
22	587537401	PULLEY *PULLEY.ENGINE*	1	-
23	548504501	SPACER *SPACER.SPACER.1.125.W/OGURA*	1	-
24	592821701	CLUTCH *CLUTCH.OGURA.GT1,5-EH17(D)*	1	-
25	532126197	WASHER *WASHER.1-1/2 ODX15/32 IDX.250*	1	-
26	581332804	BOLT *BOLT.CLUTCH.7/16-20X3.5.GRADE5*	1	-
27	596564402	BOLT *BOLT.HEX.HEAD.3/8-16 X 1-1/4*	4	-
28	596238701	WASHER *WASHER.SPRING.LOCK.381IDX.680*	4	-
29	583955601	TUBE *TUBE EXHAUST LEFT KAWA TWIN*	1	-
30	583955701	TUBE *TUBE EXHAUST RIGHT KAWA TWIN*	1	-
31	532178151	GASKET *GASKET.EXHAUST.KAWASAKI*	2	-
32	532184362	NUT	4	-

Ref.	Article N.	Description	Qty	Kit
		NUT.HEX.FLANGE.TOPLOCK.M8-1.25		
33	532131563	COVER *COVER.TERMINAL.RED*	1	-
34	596031501	LOCK NUT *LOCK.NUT.188 X.218.CLEAR.ZINC*	1	-
35	532148456	TUBE *TUBE.EASY_OIL_DRAIN*	1	-
1	585039803	GUARD *GUARD.ENG.HUSQ.RZ.AM.GRY.X685*	1	-
2	589283302	FRAME TUBE *FRAME.TUBE.RZ.MAIN.WELD.LH.ORG*	1	-
3	589283402	FRAME TUBE *FRAME.TUBE.RZ.MAIN.WELD.RH.ORG*	1	-
4	584991002	TUBE *TUBE.FRAME.RR.HUSQ.23.RZ.ORG*	1	-
5	598712402	PLATE KIT *PLATE.RZ.FOOTREST.AM.GREY.X685*	1	-
6	586703802	FRONT COVER *FRONT.COVER.RZ.FOOTREST.RF.685*	1	-
7	529365102	SUPPORT *SUPPORT.RZ.FOOTREST.PLATE.X431*	1	-
8	587546902	SCREW *SCREW.ASM.5/16-18.ADJ.ISO.TAP*	1	-
9	585916701	LIGHT *LIGHT.ZTR.LED.ASM*	1	-
10	587225201	GROMMET *GROMMET.RUBBER.PUSHIN*	2	-
11	585989301	BUMPER *GROMMET.BUMPER*	7	-
12	585523104	CROSS MEMBER *CROSS.PNT.MEMBER.BLK*	1	-
13	587458602	BRACKET *BRACKET.SKIDPLTE.LED.RFRSHX417*	1	-
14	585331502	COVER *COVER.RAIL.LH.RZ.x668*	1	-
15	585331602	COVER *COVER.RAIL.RH.RZ.x668*	1	-
16	597783101	KNOB *KNOB.3WING.5/16-18.CLR.ZN*	1	-
17	585474302	BRACKET *ROD.BYPASS.EZT.X431*	2	-
18	593682604	SUPPORT *SUPPORT.RZ.LH.CONSOLE.BLK*	1	-

Ref.	Article N.	Description	Qty	Kit
19	580501302	BRACKET *FENDER.SUPPORT.PNT.X431*	2	-
20	593118304	SUPPORT *SUPPORT.RZ.CONSOLE.RH.MS431*	1	-
21	586654302	BOLT *BOLT.SHOULDER.3/8-16X3.GR5 CLR*	2	-
22	586881101	BOLT *BOLT.5/16-18.THRD.ROLL.SHOULDR*	2	-
23	817000510	BOLT *BOLT.5/16-18HEX.WHS.HD.LCKSERR*	7	-
24	595316601	BOLT *BOLT.HHD FLNG 5/16-18X2.75 GR5*	3	-
25	596564405	BOLT *BOLT.HEX.HEAD.3/8-16 X 3*	8	-
26	574233802	SCREW *HHFS.5/16 X 2.25 GD5.CLR.ZINC*	8	-
27	577117702	BOLT *HHFS.3/8-16 X 3.GR5.CLEAR.ZINC*	4	-
28	596321701	SCREW *SCREW.#10 X 0.750.BOS.THREAD*	6	-
29	817580520	BOLT *SCREW.THDROL.5/16-18X1.25 TYTT*	2	-
30	596434001	SCREW *SCREW.#10X0.500.BOS.THREAD*	2	-
31	521996502	NUT *NUT.HEX.LOCK.W/FLANGE.3/8-16*	14	-
32	594944401	NUT *NUT.HEX.FLNG.5/16-18.NYLOC.CLR*	16	-
34	595901901	NUT *NUT.7/16-14.GR5.CLR.ZINC*	2	-
36	532423063	WASHER *PALNUT.5/16*	1	-
39	593842101	BUSHING *BUSHING*	2	-
40	521938102	LINK *LINK.FRINT.SUSP.CLEAR.ZINC*	1	-
41	595901901	NUT *NUT.7/16-14.GR5.CLR.ZINC*	2	-
42	586548101	HARNESS *HARNESS.LED.LIGHT.RZ*	1	-
1	548325202	TRANSMISSION *TRANSMISSION.EZT.SHORT.20.RT*	1	-
2	548325201	TRANSMISSION	1	-

Ref.	Article N.	Description	Qty	Kit
		TRANSMISSION.EZT.SHORT.20.LT		
3	580806602	BRACKET *BRACKET.EZT.MOUNT.REAR.PNTX431*	2	-
4	595316601	BOLT *BOLT.HHD FLNG 5/16-18X2.75 GR5*	4	-
5	594944401	NUT *NUT.HEX.FLNG.5/16-18.NYLOC.CLR*	6	-
6	593852803	SPACER *SPACER.TUBE.EZT.6.810*	2	-
7	596581901	BOLT *BOLT.HEXAGON.3/8-16 X 2-1/2*	4	-
8	596565301	WASHER *WASHER;3/8X0.08IN.ST.CLR.ZINC*	4	-
9	596238701	WASHER *WASHER.SPRING.LOCK.381IDX.680*	4	-
10	580806502	SUPPORT *SUPPORT.FRONT.TRANS.PNTX431*	2	-
11	574233802	SCREW *HHFS.5/16 X 2.25 GD5.CLR.ZINC*	2	-
12	596930401	LINKAGE *LINKAGE.BRAKE.LT.CLR.ZINC*	1	-
13	596930701	LINKAGE *LINKAGE.BRAKE.RH.CLR.ZINC*	1	-
14	587115301	PIN *PIN.CLEVIS.3/16X.475*	1	-
15	587225301	PIN *PIN COTTER;LOCKING;BOWTIE;1IN*	1	-
16	596299801	SPRING *SPRING.BRAKE.ROD.CLEAR.ZINC*	2	-
17	595086601	NUT *NUT.HEX.1/4-20 ST ZPB*	2	-
18	596582301	WASHER *WASHER 0.28 X 0.63 CLR.ZN*	4	-
19	585474402	ROD *ROD.BYPASS.LH.EZT.CLEAR.ZINC*	1	-
20	585474502	ROD *ROD.BYPASS.RH.EZT.CLEAR.ZINC*	1	-
21	596580601	PIN *PIN.RETAINING.1-7/16 X 0.073*	4	-
22	586665101	SPRING *SPRING.ROD.BYPASS.EZT*	2	-
23	587653903	NUT *NUT.1/2-20UNF-2B.1/2-20X3/4GR8*	8	-

Ref.	Article N.	Description	Qty	Kit
24	539110411	DRIVE BELT *Drive BELT, EZT'S*	1	-
1	596327001	SERVICE KIT *DECK.54CC.WELDMT.RZ*	1	-
2	592951801	DRIVE BELT	1	-
3	582760502	BLADE *BLADE.54CC.HI-LIFT.PZ.165.431*	3	-
4	590304407	COVER *COVER.PNT.54CC.MDRL.LH.ZTR.GRY*	1	-
5	590304207	COVER *COVER.PNT.54CC.MANDREL.RH.GREY*	1	-
6	534214702	HOUSING ASSY *HOUSING.ASM.NO-GREASE.CASTIRON*	3	-
7	589527301	WHEEL *WHEEL.GAUGE.WIDE(RALLY)*	4	-
8	574169601	ROLLER *ROLLER, GAUGE .635 BORE*	2	-
9	532175708	PULLEY ASSY *PULLEY.MANDREL.CRD 107CM.DOM.*	3	-
10	532197379	PULLEY *PULLEY.IDLER.4,5.X431*	2	-
11	532197380	PULLEY *PULLEY.IDLER.4,5.SPACER.X431*	1	-
12	590632204	DEFLECTOR ASSY *DEFLECTOR.ASM.54CC.RES.BLACK*	1	-
13	595297001	ROD *ROD.HINGE*	1	-
14	585323901	BEARING *BEARING.MANDREL.TOP.EXTENDED*	3	-
15	582219602	ARM *ARM.PNT.IDLER.CLEARCUT.54.EDIP*	1	-
16	536050602	LINK *ARM.FIXED.MOWER.SUSP.X431*	2	-
17	532415598	HOSE COUPLING *PORT.WASHOUT*	1	-
18	532416405	COUPLING *COUPLING.QUICK-CONNECT*	1	-
19	596482001	SPRING *SPRING.CLEAR.ZINC*	2	-
20	587354701	SPRING *SPRING.DEFLECTOR*	1	-
21	532197251	SPRING *USE FOR SERIAL # STARTING 02012025*000000 & AFTER*	1	-

Ref.	Article N.	Description	Qty	Kit
21	587358401	SPRING *SPRING.EXTN.42FCS.TR.DECK.DRV*	1	-
22	574196502	TUBE *TUBE.ROLLER.AXLE.LONG.CLR.ZINC*	1	-
23	587256501	SHAFT *SHAFT ASM.MNDRL.N/GREASEABLE*	3	-
24	589813301	PLUG *PLUG.TREE..203HOLE.BLK*	3	-
25	590732501	BUMPER ASSY *BUMPER.ASM.54CC.TRIMSIDE.HUSQ*	1	-
26	532194209	SPRING *PIN.COTTER.7/16.BOW TIE LOCK*	2	-
27	593824001	STUD *STUD.W/DANTI-ROTATION*	2	-
28	532170165	BOLT *BOLT.SHOULDER.5/16-18 TT*	2	-
29	596434404	BOLT *BOLT.SHOULDER.3/8-16X3-5/8*	4	-
30	584309301	SCREW *SCREW.SEMS.7/16-20X1.HEX.HEAD*	3	-
31	596240801	BOLT *BOLT.EYELET.5/16-18 X 3-1/2*	1	-
32	584953901	BOLT *BOLT.HEX.WSHRHD.313-18X1.19*	12	-
33	596136301	BOLT *BOLT.CUP.HEAD.3/8-16 X 2*	1	-
34	594944501	BOLT *BLT.CUP.HD.SQR.1/2-13X8.0 G5*	1	-
35	532196539	BOLT *BOLT.SHOULDER*	2	-
36	532137729	SCREW *SCREW.THD.ROLL.1/4-20 X 5/8*	9	-
37	599972501	BOLT *BOLT.HEX.GR8.CLR.Zn*	1	-
38	588438301	SCREW *SCREW.7/16-14 X 2.125.WASHER*	1	-
39	596134801	HEXAGON NUT *NUT.HEX.9/16-18 X 1.010*	3	-
40	873900600	NUT *NUT.LOCK.FLG.3/8-16UNC*	5	-
41	521991102	NUT *1/2-13.HEX.FLANGE.NYLOK*	1	-
42	596039201	LOCK NUT	2	-

Ref.	Article N.	Description	Qty	Kit
		NUT.SER.FLANGE.LOCKNUT.5/16-18		
43	596135701	LOCK NUT *NUT.LOCK.PRVL.TORQ.5/16-18X.68*	2	-
44	532110452	NUT *NUT.PUSH.PIN.HINGE.PHOS.&.OIL*	1	-
45	532178515	WASHER *WASHER.FLAT.HARDENED*	1	-
47	819191912	WASHER *WASHER.1-5/32 X 19/32 X 12GA*	2	-
48	598752001	MANDREL *MANDREL.CAST.IRON*	3	-
49	521938102	LINK *LINK.FRINT.SUSP.CLEAR.ZINC*	1	-
1	586429702	SHAFT ASSY *SHAFT ASSY*	1	-
2	586457101	LINK *LINK*	1	-
3	586457201	LINK *LINK*	1	-
4	587622901	LIFTING LEVER ASSY *LIFTING LEVER ASSY*	1	-
5	580486102	SPACER *SPACER*	2	-
6	585682102	BRACKET *BRACKET*	2	-
7	587623001	LINK ASSY *LINK ASSY*	2	-
7	596766601	LINK ARM ASSY *LINK*	2	-
8	525847202	LINK *LINK ASSY*	2	-
9	587140502	ARM *ARM*	2	-
10	587623001	LINK ASSY *LINK ASSY*	2	-
11	532411555	GRIP *GRIP*	2	-
12	586867601	SPRING *SPRING*	4	-
13	532196314	SPRING *SPRING*	1	-
14	596482001	SPRING *SPRING*	2	-

Ref.	Article N.	Description	Qty	Kit
15	593824001	STUD *STUD*	2	-
16	532194208	PIN *PIN*	2	-
17	587225301	PIN *PIN*	4	-
18	532194209	SPRING *SPRING*	1	-
19	510184901	BUSHING *BUSHING*	2	-
20	585701401	PIN *PIN*	2	-
21	532194209	SPRING *SPRING*	2	-
22	585682001	ROD *ROD*	2	-
23	586457401	BELLCRANK *BELLCRANK*	1	-
24	586457501	BELLCRANK *BELLCRANK*	1	-
25	532196539	BOLT *BOLT*	2	-
26	586561301	SCREW *SCREW*	2	-
27	532137729	SCREW *SCREW*	2	-
28	596135701	LOCK NUT *NUT*	2	-
30	589464902	NUT *NUT*	2	-
31	596320001	WASHER *WASHER*	2	-
32	596565301	WASHER *WASHER*	2	-
33	812000002	RETAINER RING *RETAINER RING*	1	-
1	548323801	SEAT *SEAT.18.LOW.PROFILE.SUSPENSION*	1	-
1	540603801	SEAT *FOR 97084740100, 97084750100*	1	-
2	598001601	SERVICE KIT *PLATE.MOUNTING.SK121.EDIP*	1	-
3	586220802	SUPPORT PLATE	1	-

Ref.	Article N.	Description	Qty	Kit
		PLATE.SUPPORT.DECK.LIFT		
4	586221202	PLATE *PLATE.DECK.LIFT.X431*	1	-
5	597160003	PLATE *PLATE.SEAT.SUPPORT.RZ.RVS.X668*	1	-
6	580308202	SUPPORT *SUPPORT.REAR.SEAT.PNT431*	2	-
7	873970500	NUT *NUT.LOCK.HEX.FLANGE*	4	-
9	539132140	SWITCH *SEAT.SWITCH*	1	-
9	540670401	SWITCH *FOR 97084740100, 97084750100*	1	-
11	586428601	SUPPORT LEG *SUPPORT.LEG.DECK.LIFT*	1	-
12	585989301	BUMPER *GROMMET.BUMPER*	2	-
13	539104763	CLIP *CLIP*	5	-
14	539990316	BOLT *BOLT*	4	-
15	510422701	SCREW *SCREW*	2	-
18	596240701	BOLT *BOLT*	2	-
19	874490512	BOLT *BOLT*	4	-
20	817000510	BOLT *BOLT*	6	-
21	594944401	NUT *NUT*	2	-
22	521996502	NUT *NUT.FLANGE.*	2	-
26	597869301	BOLT *BOLT.CARRI.SQUR.3/8X.45.CLR Zn*	2	-
28	597330002	BRACKET *BRCKT.SEAT.PIVOT.SK121.RZ.X431*	1	-
34	597553401	BUMPER *BUMPER.3/8-16.INTERNAL THREAD*	2	-
1	598851703	TUBE *TUBE.RZ.LEVER.W/GRIP.RT X428*	1	-
2	598851704	TUBE *TUBE.RZ.LEVER.W/GRIP.LT X428*	1	-

Ref.	Article N.	Description	Qty	Kit
3	585124705	BRACKET *BRACKET.CONTROLS.ZTR.E-DIP*	2	-
4	539131518	BEARING *BEARING, FLANGE*	2	-
5	576140301	LEVER *LEVER.CONTROL*	2	-
6	587601703	LEVER *CNTRL.LEVER.*	2	-
7	584927201	SPACER *SPACER.PIVOT.CONTROL*	2	-
8	539102720	GAS SPRING *DAMPENER*	2	-
9	547930201	BLOCK *BLOCK.TRACKING.CONTROL.REC.BLK*	2	-
12	588604902	ROD *ROD.ASM.RH.ADJUSTABLE.*	1	-
13	588605002	ROD *ROD.ASM.LH.ADJUSTABLE.*	1	-
14	537602401	CLIP *CLIP.R-CLIP*	2	-
15	587601501	SWITCH *SWITCH.INTLK.RZ.RFRSH.BUTTON*	2	-
16	596434301	BOLT *BOLT.HX.1/2-13 X 2-3/4.CLR.ZNC*	2	-
17	585986101	BOLT *SCREW.SHAKEPROOF.1.25.BLACK*	2	-
18	592858702	BOLT *BOLT.5/16-18X.75.HEX.FLANGE*	8	-
19	596580801	BOLT *BOLT.HEX.SCREW.5/16-18 X 1*	2	-
20	587885301	SCREW *SCREW.CAP.SOCKET.6PT.5/16-18*	2	-
21	525544002	BOLT *BOLT.HEXAGON.HEAD.5/16-18X1.25*	4	-
22	574822701	SCREW *SCR #10-24 X .75 SKT HD BLK ZN*	2	-
23	539108010	NUT *NUT 1/2-13HX JM NYL INST GR2ZN*	2	-
24	594944401	NUT *NUT.HEX.FLNG.5/16-18.NYLOC.CLR*	10	-
25	596583702	NUT *NUT.HEX.5/16-18.NYLOC.BLK_ZINC*	4	-
26	596039201	LOCK NUT	4	-

Ref.	Article N.	Description	Qty	Kit
		NUT.SER.FLANGE.LOCKNUT.5/16-18		
27	532423063	WASHER	1	-
1	536856401	WHEEL ASSY *WHEEL.ASM.K3012.20x10.BLACK*	2	-
2	580830801	WHEEL ASSY *WHEEL.ASSY.FRONT.CASTER.11X6-5*	2	-
2	595910102	WHEEL ASSY *FOR 97084740100, 97084750100*	1	-
3	586650310	YOKE *YOKE.CASTER.ASM.6.AM.GRY.X685*	2	-
4	596623501	VALVE *VALVE.ZERK.1/2.DRIVE IN*	2	-
5	539103300	NIPPLE *VALVE.ZERK.1/4*	2	-
6	539112660	BEARING *BEARING, FLANGED*	2	-
7	539117901	BLADE BUSHING *CASTER BUSHING*	2	-
8	595281301	CAP *CAP GREASE*	2	-
9	596301001	PLUG *PLUG.CASTER.CLEAR.ZINC*	2	-
10	585995401	SPACER *SPACER.PIVOT*	2	-
11	596388901	SPRING *SPRING.CASTER.CLEAR.ZINC*	2	-
12	596319901	SCREW *SCREW.HEX.5/16-18 X 1 GR5*	2	-
13	576601503	SCREW *BOLT.RHSNB; 1/2-13 X 7.5*	2	-
14	521991103	NUT *NUT.LOCK 1/2-13 NYLOK.BLK.Zn*	2	-
15	587653903	NUT *NUT.1/2-20UNF-2B.1/2-20X3/4GR8*	8	-
16	596319801	WASHER *WASHER.1.025 X 1.625 X 0.063*	2	-
1	598602606	CONSOLE ASSY *CONSOLE.ASM.RZ.RH.AMG.MS685*	1	-
2	586621203	CONSOLE ASSY *CONSOLE.RZ.REFRESH.LH.MS685*	1	-
3	531016704	FUEL TANK ASSY *FUEL.TANK.ASM.RZ.2.25 2024*	1	-
4	529979701	HARNESS	1	-

Ref.	Article N.	Description	Qty	Kit
		FUEL.CAP.VENTED.BLK		
5	597873201	THROTTLE *THROTTLE.CABLE.ASSY 39*	1	-
6	586881503	CHOKE CONTROL ASSY *CHOKE.CONTROL.ASM.PUSH-IN*	1	-
7	539107541	IGNITION SWITCH *IGNITION SWITCH*	1	-
8	582107602	SWITCH *SWITCH.PTO.8TERMINAL.STD.RED*	1	-
9	587601501	SWITCH *SWITCH.INTLK.RZ.RFRSH.BUTTON*	2	-
11	585522709	CONTROL PANEL *CONTROL.PANEL.RZ.REFSH.AM.GRY*	1	-
12	532163465	BATTERY *BATTERY.12VOLT.28AMP.WET*	1	-
13	593634404	BRACKET *BRACKET.PNT.BATTERY.MOUNT.EDIP*	1	-
14	582609602	BOX *BOX.PNT.BATTERY.RZ.EDIP*	1	-
15	532131563	COVER *COVER.TERMINAL.RED*	2	-
16	539102759	INSULATOR *INSULATOR-BATTERY*	1	-
17	576618101	TANK VENT *VALVE, FUEL CHECK*	1	-
18	586123906	FUEL HOSE *FUEL.HOSE.SHUT.OFF.ASM.10.18*	1	-
19	582042802	SOLENOID *SOLENOID W/BRASS.PLUNGER.Zn*	1	-
20	587198601	HARNESS *HARNESS.BTTRY.CABLE.RZ.REFRESH*	1	-
21	587044550	HOSE *HOSE.3/16.VAPOR.LINE.50LGTH*	1	-
22	547159601	GROMMET *VITON.GROMMET.FUEL.OUTLET*	1	-
23	584648201	GROMMET *GOMMET.FUEL.CHECK.VALVE*	1	-
24	532139277	NIPPLE *ELBOW.FUEL.TANK*	1	-
25	594919101	HOUR METER *HOURMETER.SRVMINDER.RECT*	1	-
26	532411935	KEY *IGNITION.KEY*	1	-

Ref.	Article N.	Description	Qty	Kit
27	586108201	HARNESS *CABLE.BATTERY.POS.RZ*	1	-
28	588839401	HOOK *HOOK.J.BATTERY*	2	-
29	545227101	SCREW *SCREW.#6.PLASTITE*	2	-
30	596789701	SCREW *SCR.HEX.1/4-20X5/8*	1	-
31	532141841	SCREW *SCREW.10-16X0.650*	2	-
32	574822701	SCREW *SCREW.SAFETY.SWITCH*	2	-
33	595316801	BOLT *BOLT.BATTERY.BOX*	2	-
34	874760412	BOLT *BOLT.HEX.HD.1/4-20UNC X 3/4*	2	-
35	596135801	BOLT *BOLT.CONSOLE.*	2	-
36	596133601	LOCK NUT *LOCKNUT.KEPS.1/4-20*	2	-
37	521996502	NUT *NUT.BATTERY.BOX*	2	-
38	595086601	NUT *NUT.HEX.1/4-20 ST ZPB*	5	-
39	532123487	HOSE CLAMP *CLAMP.HOSE.BLK*	4	-
40	587044810	HOSE *HOSE.1/4.LOW.PERM.FUEL.LN.10*	1	-
41	587044818	HOSE *HOSE.1/4.LOW.PERM.FUEL.LN.18*	1	-
42	586337301	HARNESS *HARNESS.MAIN.RZ.WITHOUT.BRAKE*	1	-

MOWER LIFT \/ DECK LIFT

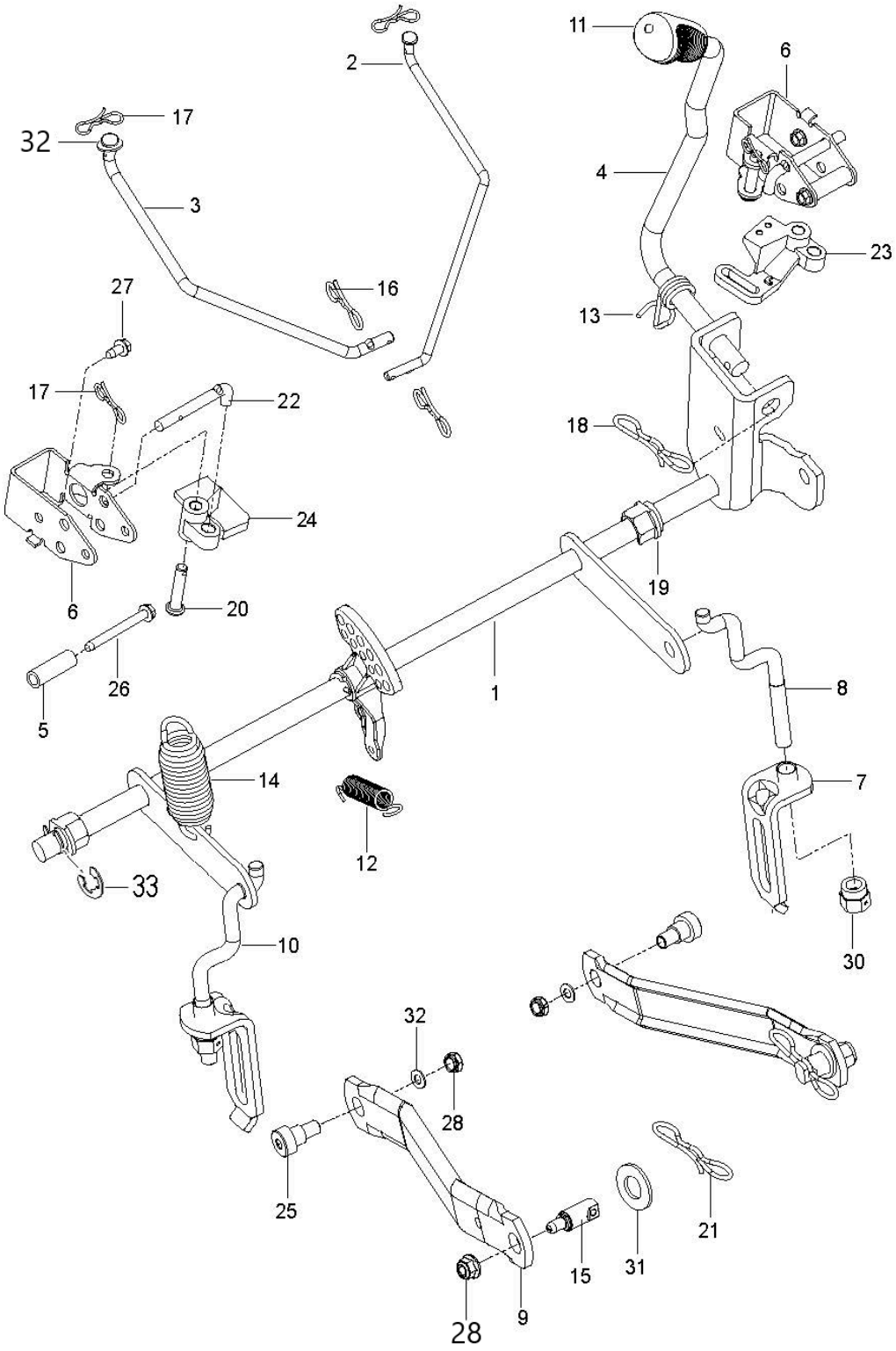

Ref.	Article N.	Description	Qty	Kit
1	536831102	DECAL *DECAL.ZTR.PKBRAKE.AMG.LH*	1	-
2	536831101	DECAL *DECAL.ZTR.INS.PKBRAKE.AMG.RH*	1	-
3	548309502	DECAL *DECAL.Z254FX*	2	-

Ref.	Article N.	Description	Qty	Kit
4	529527001	DECAL *DECAL.ZTR.WARNING.BATTERY.SYMB*	1	-
6	539108385	DECAL *DECAL.DO NOT TOW*	1	-
7	539108386	DECAL *DECAL, EXITING MOWER*	1	-
8	539109803	DECAL *DECAL.SERVICE.RZ.*	1	-
9	537449101	DECAL *DECAL.ZTR.Z200.INST.HUS.AMG.EN*	1	-
12	590810801	DECAL *DECAL.TR/ZTR.DECKWARN.CC.BLK*	1	-
13	589357902	DECAL *DECAL.DECK.CLEARCUT.NOSTEP*	2	-
14	546540701	DECAL *DECAL.ZTR.BLTROUTING.3BLADE*	1	-
15	577469001	DECAL *DECAL.HUSQVARNA.210MM*	1	-
17	537450103	DECAL *DECAL.DECK.54:CLEARCUT.BLACK*	1	-
18	584904602	DECAL *DECAL.DECK.DEFLECTOR.WARN*	1	-
19	529405301	DECAL *DECAL.BUILTINAMERICA.HUSQ*	1	-
20	591357301	DECAL *DECAL.LOGO.SEATPLATE.RZ.ZTR.HU*	1	-
21	532428677	DECAL *BADGE.CROWN.DECAL*	1	-
1	598736102	PLATE *PLATE.ENG.23RZ.MS431*	1	-
2	581886702	BRACKET *BRACKET.PNT.MUFFLER.EDIP*	1	-
3	548529902	CLUTCH *CLUTCH.STOP.BLACK*	1	-
4	587451202	GUARD *GUARD.MUFFLER.WO.TOW.HITCH.BLK*	1	-
5	539132859	HEAT SHIELD *SHIELD, HEAT*	1	-
6	539131604	MUFFLER ASSY *MUFFLER.ASM.TWIN*	1	-
7	595901501	BOLT *BOLT.CUP.SQ.NCK.5/16-18 X 1.02*	2	-
8	595901601	BOLT	1	-

Ref.	Article N.	Description	Qty	Kit
		BOLT.CUP.5/16-18 X 3/4.CLR.ZNC		
9	596135901	BOLT *BOLT.HEX.5/16-18 X 3/4.CLR.ZNC*	4	-
10	594944401	NUT *NUT.HEX.FLNG.5/16-18.NYLOC.CLR*	5	-
11	532448145	ARM *ARM.IDLER*	1	-
12	501603701	BEARING *BEARING.FLANGED.PLASTIC.3/4ID*	2	-
13	582538902	SPINDLE *SPINDLE.IDLER.CLR.ZINC*	1	-
14	582539502	BOLT *BOLT.1/2-13X2.75 GRD5*	1	-
15	521991102	NUT *1/2-13.HEX.FLANGE.NYLOK*	1	-
16	532193197	PULLEY *PULLEY.PNT.IDLER 48PRIMARY*	1	-
17	532193197	PULLEY *PULLEY.IDLER.48PRIMARY*	1	-
18	596433901	SCREW *SCREW.HEX.3/8-16 X 3.54.CLR*	1	-
19	596134901	WASHER *WASHER.PLAIN.3/8 X 7/8*	2	-
20	596240901	NUT *NUT.PREVAIL.3/8-16 X .564*	2	-
21	532196105	SPRING *SPRING.DRIVE.DECK.2006*	1	-
22	587537401	PULLEY *PULLEY.ENGINE*	1	-
23	548504501	SPACER *SPACER.SPACER.1.125.W/OGURA*	1	-
24	592821701	CLUTCH *CLUTCH.OGURA.GT1,5-EH17(D)*	1	-
25	532126197	WASHER *WASHER.1-1/2 ODX15/32 IDX.250*	1	-
26	581332804	BOLT *BOLT.CLUTCH.7/16-20X3.5.GRADE5*	1	-
27	596564402	BOLT *BOLT.HEX.HEAD.3/8-16 X 1-1/4*	4	-
28	596238701	WASHER *WASHER.SPRING.LOCK.381IDX.680*	4	-
29	583955601	TUBE *TUBE EXHAUST LEFT KAWA TWIN*	1	-

Ref.	Article N.	Description	Qty	Kit
30	583955701	TUBE *TUBE EXHAUST RIGHT KAWA TWIN*	1	-
31	532178151	GASKET *GASKET.EXHAUST.KAWASAKI*	2	-
32	532184362	NUT *NUT.HEX.FLANGE.TOPLOCK.M8-1.25*	4	-
33	532131563	COVER *COVER.TERMINAL.RED*	1	-
34	596031501	LOCK NUT *LOCK.NUT.188 X.218.CLEAR.ZINC*	1	-
35	532148456	TUBE *TUBE.EASY_OIL_DRAIN*	1	-
1	585039803	GUARD *GUARD.ENG.HUSQ.RZ.AM.GRY.X685*	1	-
2	589283302	FRAME TUBE *FRAME.TUBE.RZ.MAIN.WELD.LH.ORG*	1	-
3	589283402	FRAME TUBE *FRAME.TUBE.RZ.MAIN.WELD.RH.ORG*	1	-
4	584991002	TUBE *TUBE.FRAME.RR.HUSQ.23.RZ.ORG*	1	-
5	598712402	PLATE KIT *PLATE.RZ.FOOTREST.AM.GREY.X685*	1	-
6	586703802	FRONT COVER *FRONT.COVER.RZ.FOOTREST.RF.685*	1	-
7	529365102	SUPPORT *SUPPORT.RZ.FOOTREST.PLATE.X431*	1	-
8	587546902	SCREW *SCREW.ASM.5/16-18.ADJ.ISO.TAP*	1	-
9	585916701	LIGHT *LIGHT.ZTR.LED.ASM*	1	-
10	587225201	GROMMET *GROMMET.RUBBER.PUSHIN*	2	-
11	585989301	BUMPER *GROMMET.BUMPER*	7	-
12	585523104	CROSS MEMBER *CROSS.PNT.MEMBER.BLK*	1	-
13	587458602	BRACKET *BRACKET.SKIDPLTE.LED.RFRSHX417*	1	-
14	585331502	COVER *COVER.RAIL.LH.RZ.x668*	1	-
15	585331602	COVER *COVER.RAIL.RH.RZ.x668*	1	-
16	597783101	KNOB	1	-

Ref.	Article N.	Description	Qty	Kit
		KNOB.3WING.5/16-18.CLR.ZN		
17	585474302	BRACKET *ROD.BYPASS.EZT.X431*	2	-
18	593682604	SUPPORT *SUPPORT.RZ.LH.CONSOLE.BLK*	1	-
19	580501302	BRACKET *FENDER.SUPPORT.PNT.X431*	2	-
20	593118304	SUPPORT *SUPPORT.RZ.CONSOLE.RH.MS431*	1	-
21	586654302	BOLT *BOLT.SHOULDER.3/8-16X3.GR5 CLR*	2	-
22	586881101	BOLT *BOLT.5/16-18.THRD.ROLL.SHOULDR*	2	-
23	817000510	BOLT *BOLT.5/16-18HEX.WHS.HD.LCKSERR*	7	-
24	595316601	BOLT *BOLT.HHD FLNG 5/16-18X2.75 GR5*	3	-
25	596564405	BOLT *BOLT.HEX.HEAD.3/8-16 X 3*	8	-
26	574233802	SCREW *HHFS.5/16 X 2.25 GD5.CLR.ZINC*	8	-
27	577117702	BOLT *HHFS.3/8-16 X 3.GR5.CLEAR.ZINC*	4	-
28	596321701	SCREW *SCREW.#10 X 0.750.BOS.THREAD*	6	-
29	817580520	BOLT *SCREW.THDROL.5/16-18X1.25 TYTT*	2	-
30	596434001	SCREW *SCREW.#10X0.500.BOS.THREAD*	2	-
31	521996502	NUT *NUT.HEX.LOCK.W/FLANGE.3/8-16*	14	-
32	594944401	NUT *NUT.HEX.FLNG.5/16-18.NYLOC.CLR*	16	-
34	595901901	NUT *NUT.7/16-14.GR5.CLR.ZINC*	2	-
36	532423063	WASHER *PALNUT.5/16*	1	-
39	593842101	BUSHING *BUSHING*	2	-
40	521938102	LINK *LINK.FRINT.SUSP.CLEAR.ZINC*	1	-
41	595901901	NUT *NUT.7/16-14.GR5.CLR.ZINC*	2	-

Ref.	Article N.	Description	Qty	Kit
42	586548101	HARNESS *HARNESS.LED.LIGHT.RZ*	1	-
1	548325202	TRANSMISSION *TRANSMISSION.EZT.SHORT.20.RT*	1	-
2	548325201	TRANSMISSION *TRANSMISSION.EZT.SHORT.20.LT*	1	-
3	580806602	BRACKET *BRACKET.EZT.MOUNT.REAR.PNTX431*	2	-
4	595316601	BOLT *BOLT.HHD FLNG 5/16-18X2.75 GR5*	4	-
5	594944401	NUT *NUT.HEX.FLNG.5/16-18.NYLOC.CLR*	6	-
6	593852803	SPACER *SPACER.TUBE.EZT.6.810*	2	-
7	596581901	BOLT *BOLT.HEXAGON.3/8-16 X 2-1/2*	4	-
8	596565301	WASHER *WASHER;3/8X0.08IN.ST.CLR.ZINC*	4	-
9	596238701	WASHER *WASHER.SPRING.LOCK.381IDX.680*	4	-
10	580806502	SUPPORT *SUPPORT.FRONT.TRANS.PNTX431*	2	-
11	574233802	SCREW *HHFS.5/16 X 2.25 GD5.CLR.ZINC*	2	-
12	596930401	LINKAGE *LINKAGE.BRAKE.LT.CLR.ZINC*	1	-
13	596930701	LINKAGE *LINKAGE.BRAKE.RH.CLR.ZINC*	1	-
14	587115301	PIN *PIN.CLEVIS.3/16X.475*	1	-
15	587225301	PIN *PIN COTTER;LOCKING;BOWTIE;1IN*	1	-
16	596299801	SPRING *SPRING.BRAKE.ROD.CLEAR.ZINC*	2	-
17	595086601	NUT *NUT.HEX.1/4-20 ST ZPB*	2	-
18	596582301	WASHER *WASHER 0.28 X 0.63 CLR.ZN*	4	-
19	585474402	ROD *ROD.BYPASS.LH.EZT.CLEAR.ZINC*	1	-
20	585474502	ROD *ROD.BYPASS.RH.EZT.CLEAR.ZINC*	1	-
21	596580601	PIN	4	-

Ref.	Article N.	Description	Qty	Kit
		PIN.RETAINING.1-7/16 X 0.073		
22	586665101	SPRING *SPRING.ROD.BYPASS.EZT*	2	-
23	587653903	NUT *NUT.1/2-20UNF-2B.1/2-20X3/4GR8*	8	-
24	539110411	DRIVE BELT *Drive BELT, EZT'S*	1	-
1	596327001	SERVICE KIT *DECK.54CC.WELDMT.RZ*	1	-
2	592951801	DRIVE BELT	1	-
3	582760502	BLADE *BLADE.54CC.HI-LIFT.PZ.165.431*	3	-
4	590304407	COVER *COVER.PNT.54CC.MDRL.LH.ZTR.GRY*	1	-
5	590304207	COVER *COVER.PNT.54CC.MANDREL.RH.GREY*	1	-
6	534214702	HOUSING ASSY *HOUSING.ASM.NO-GREASE.CASTIRON*	3	-
7	589527301	WHEEL *WHEEL.GAUGE.WIDE(RALLY)*	4	-
8	574169601	ROLLER *ROLLER, GAUGE .635 BORE*	2	-
9	532175708	PULLEY ASSY *PULLEY.MANDREL.CRD 107CM.DOM.*	3	-
10	532197379	PULLEY *PULLEY.IDLER.4,5.X431*	2	-
11	532197380	PULLEY *PULLEY.IDLER.4,5.SPACER.X431*	1	-
12	590632204	DEFLECTOR ASSY *DEFLECTOR.ASM.54CC.RES.BLACK*	1	-
13	595297001	ROD *ROD.HINGE*	1	-
14	585323901	BEARING *BEARING.MANDREL.TOP.EXTENDED*	3	-
15	582219602	ARM *ARM.PNT.IDLER.CLEARCUT.54.EDIP*	1	-
16	536050602	LINK *ARM.FIXED.MOWER.SUSP.X431*	2	-
17	532415598	HOSE COUPLING *PORT.WASHOUT*	1	-
18	532416405	COUPLING *COUPLING.QUICK-CONNECT*	1	-
19	596482001	SPRING	2	-

Ref.	Article N.	Description	Qty	Kit
		SPRING.CLEAR.ZINC		
20	587354701	SPRING *SPRING.DEFLECTOR*	1	-
21	532197251	SPRING *USE FOR SERIAL # STARTING 02012025*000000 & AFTER*	1	-
21	587358401	SPRING *SPRING.EXTN.42FCS.TR.DECK.DRV*	1	-
22	574196502	TUBE *TUBE.ROLLER.AXLE.LONG.CLR.ZINC*	1	-
23	587256501	SHAFT *SHAFT ASM.MNDRL.N/GREASEABLE*	3	-
24	589813301	PLUG *PLUG.TREE..203HOLE.BLK*	3	-
25	590732501	BUMPER ASSY *BUMPER.ASM.54CC.TRIMSIDE.HUSQ*	1	-
26	532194209	SPRING *PIN.COTTER.7/16.BOW TIE LOCK*	2	-
27	593824001	STUD *STUD.W/DANTI-ROTATION*	2	-
28	532170165	BOLT *BOLT.SHOULDER.5/16-18 TT*	2	-
29	596434404	BOLT *BOLT.SHOULDER.3/8-16X3-5/8*	4	-
30	584309301	SCREW *SCREW.SEMS.7/16-20X1.HEX.HEAD*	3	-
31	596240801	BOLT *BOLT.EYELET.5/16-18 X 3-1/2*	1	-
32	584953901	BOLT *BOLT.HEX.WSHRHD.313-18X1.19*	12	-
33	596136301	BOLT *BOLT.CUP.HEAD.3/8-16 X 2*	1	-
34	594944501	BOLT *BLT.CUP.HD.SQR.1/2-13X8.0 G5*	1	-
35	532196539	BOLT *BOLT.SHOULDER*	2	-
36	532137729	SCREW *SCREW.THD.ROLL.1/4-20 X 5/8*	9	-
37	599972501	BOLT *BOLT.HEX.GR8.CLR.Zn*	1	-
38	588438301	SCREW *SCREW.7/16-14 X 2.125.WASHER*	1	-
39	596134801	HEXAGON NUT *NUT.HEX.9/16-18 X 1.010*	3	-

Ref.	Article N.	Description	Qty	Kit
40	873900600	NUT *NUT.LOCK.FLG.3/8-16UNC*	5	-
41	521991102	NUT *1/2-13.HEX.FLANGE.NYLOK*	1	-
42	596039201	LOCK NUT *NUT.SER.FLANGE.LOCKNUT.5/16-18*	2	-
43	596135701	LOCK NUT *NUT.LOCK.PRVL.TORQ.5/16-18X.68*	2	-
44	532110452	NUT *NUT.PUSH.PIN.HINGE.PHOS.&.OIL*	1	-
45	532178515	WASHER *WASHER.FLAT.HARDENED*	1	-
47	819191912	WASHER *WASHER.1-5/32 X 19/32 X 12GA*	2	-
48	598752001	MANDREL *MANDREL.CAST.IRON*	3	-
49	521938102	LINK *LINK.FRINT.SUSP.CLEAR.ZINC*	1	-
1	586429702	SHAFT ASSY *SHAFT ASSY*	1	-
2	586457101	LINK *LINK*	1	-
3	586457201	LINK *LINK*	1	-
4	587622901	LIFTING LEVER ASSY *LIFTING LEVER ASSY*	1	-
5	580486102	SPACER *SPACER*	2	-
6	585682102	BRACKET *BRACKET*	2	-
7	587623001	LINK ASSY *LINK ASSY*	2	-
7	596766601	LINK ARM ASSY *LINK*	2	-
8	525847202	LINK *LINK ASSY*	2	-
9	587140502	ARM *ARM*	2	-
10	587623001	LINK ASSY *LINK ASSY*	2	-
11	532411555	GRIP *GRIP*	2	-
12	586867601	SPRING	4	-

Ref.	Article N.	Description	Qty	Kit
		SPRING		
13	532196314	SPRING *SPRING*	1	-
14	596482001	SPRING *SPRING*	2	-
15	593824001	STUD *STUD*	2	-
16	532194208	PIN *PIN*	2	-
17	587225301	PIN *PIN*	4	-
18	532194209	SPRING *SPRING*	1	-
19	510184901	BUSHING *BUSHING*	2	-
20	585701401	PIN *PIN*	2	-
21	532194209	SPRING *SPRING*	2	-
22	585682001	ROD *ROD*	2	-
23	586457401	BELLCRANK *BELLCRANK*	1	-
24	586457501	BELLCRANK *BELLCRANK*	1	-
25	532196539	BOLT *BOLT*	2	-
26	586561301	SCREW *SCREW*	2	-
27	532137729	SCREW *SCREW*	2	-
28	596135701	LOCK NUT *NUT*	2	-
30	589464902	NUT *NUT*	2	-
31	596320001	WASHER *WASHER*	2	-
32	596565301	WASHER *WASHER*	2	-
33	812000002	RETAINER RING *RETAINER RING*	1	-
1	548323801	SEAT *SEAT.18.LOW.PROFILE.SUSPENSION*	1	-

Ref.	Article N.	Description	Qty	Kit
1	540603801	SEAT *FOR 97084740100, 97084750100*	1	-
2	598001601	SERVICE KIT *PLATE.MOUNTING.SK121.EDIP*	1	-
3	586220802	SUPPORT PLATE *PLATE.SUPPORT.DECK.LIFT*	1	-
4	586221202	PLATE *PLATE.DECK.LIFT.X431*	1	-
5	597160003	PLATE *PLATE.SEAT.SUPPORT.RZ.RVS.X668*	1	-
6	580308202	SUPPORT *SUPPORT.REAR.SEAT.PNT431*	2	-
7	873970500	NUT *NUT.LOCK.HEX.FLANGE*	4	-
9	539132140	SWITCH *SEAT.SWITCH*	1	-
9	540670401	SWITCH *FOR 97084740100, 97084750100*	1	-
11	586428601	SUPPORT LEG *SUPPORT.LEG.DECK.LIFT*	1	-
12	585989301	BUMPER *GROMMET.BUMPER*	2	-
13	539104763	CLIP *CLIP*	5	-
14	539990316	BOLT *BOLT*	4	-
15	510422701	SCREW *SCREW*	2	-
18	596240701	BOLT *BOLT*	2	-
19	874490512	BOLT *BOLT*	4	-
20	817000510	BOLT *BOLT*	6	-
21	594944401	NUT *NUT*	2	-
22	521996502	NUT *NUT.FLANGE.*	2	-
26	597869301	BOLT *BOLT.CARRI.SQUR.3/8X.45.CLR Zn*	2	-
28	597330002	BRACKET *BRCKT.SEAT.PIVOT.SK121.RZ.X431*	1	-
34	597553401	BUMPER	2	-

Ref.	Article N.	Description	Qty	Kit
		BUMPER.3/8-16.INTERNAL THREAD		
1	598851703	TUBE *TUBE.RZ.LEVER.W/GRIP.RT X428*	1	-
2	598851704	TUBE *TUBE.RZ.LEVER.W/GRIP.LT X428*	1	-
3	585124705	BRACKET *BRACKET.CONTROLS.ZTR.E-DIP*	2	-
4	539131518	BEARING *BEARING, FLANGE*	2	-
5	576140301	LEVER *LEVER.CONTROL*	2	-
6	587601703	LEVER *CNTRL.LEVER.*	2	-
7	584927201	SPACER *SPACER.PIVOT.CONTROL*	2	-
8	539102720	GAS SPRING *DAMPENER*	2	-
9	547930201	BLOCK *BLOCK.TRACKING.CONTROL.REC.BLK*	2	-
12	588604902	ROD *ROD.ASM.RH.ADJUSTABLE.*	1	-
13	588605002	ROD *ROD.ASM.LH.ADJUSTABLE.*	1	-
14	537602401	CLIP *CLIP.R-CLIP*	2	-
15	587601501	SWITCH *SWITCH.INTLK.RZ.RFRSH.BUTTON*	2	-
16	596434301	BOLT *BOLT.HX.1/2-13 X 2-3/4.CLR.ZNC*	2	-
17	585986101	BOLT *SCREW.SHAKEPROOF.1.25.BLACK*	2	-
18	592858702	BOLT *BOLT.5/16-18X.75.HEX.FLANGE*	8	-
19	596580801	BOLT *BOLT.HEX.SCREW.5/16-18 X 1*	2	-
20	587885301	SCREW *SCREW.CAP.SOCKET.6PT.5/16-18*	2	-
21	525544002	BOLT *BOLT.HEXAGON.HEAD.5/16-18X1.25*	4	-
22	574822701	SCREW *SCR #10-24 X .75 SKT HD BLK ZN*	2	-
23	539108010	NUT *NUT 1/2-13HX JM NYL INST GR2ZN*	2	-

Ref.	Article N.	Description	Qty	Kit
24	594944401	NUT *NUT.HEX.FLNG.5/16-18.NYLOC.CLR*	10	-
25	596583702	NUT *NUT.HEX.5/16-18.NYLOC.BLK_ZINC*	4	-
26	596039201	LOCK NUT *NUT.SER.FLANGE.LOCKNUT.5/16-18*	4	-
27	532423063	WASHER	1	-
1	536856401	WHEEL ASSY *WHEEL.ASM.K3012.20x10.BLACK*	2	-
2	580830801	WHEEL ASSY *WHEEL.ASSY.FRONT.CASTER.11X6-5*	2	-
2	595910102	WHEEL ASSY *FOR 97084740100, 97084750100*	1	-
3	586650310	YOKE *YOKE.CASTER.ASM.6.AM.GRY.X685*	2	-
4	596623501	VALVE *VALVE.ZERK.1/2.DRIVE IN*	2	-
5	539103300	NIPPLE *VALVE.ZERK.1/4*	2	-
6	539112660	BEARING *BEARING, FLANGED*	2	-
7	539117901	BLADE BUSHING *CASTER BUSHING*	2	-
8	595281301	CAP *CAP GREASE*	2	-
9	596301001	PLUG *PLUG.CASTER.CLEAR.ZINC*	2	-
10	585995401	SPACER *SPACER.PIVOT*	2	-
11	596388901	SPRING *SPRING.CASTER.CLEAR.ZINC*	2	-
12	596319901	SCREW *SCREW.HEX.5/16-18 X 1 GR5*	2	-
13	576601503	SCREW *BOLT.RHSNB; 1/2-13 X 7.5*	2	-
14	521991103	NUT *NUT.LOCK 1/2-13 NYLOK.BLK.Zn*	2	-
15	587653903	NUT *NUT.1/2-20UNF-2B.1/2-20X3/4GR8*	8	-
16	596319801	WASHER *WASHER.1.025 X 1.625 X 0.063*	2	-
1	598602606	CONSOLE ASSY *CONSOLE.ASM.RZ.RH.AMG.MS685*	1	-

Ref.	Article N.	Description	Qty	Kit
2	586621203	CONSOLE ASSY *CONSOLE.RZ.REFRESH.LH.MS685*	1	-
3	531016704	FUEL TANK ASSY *FUEL.TANK.ASM.RZ.2.25 2024*	1	-
4	529979701	HARNESS *FUEL.CAP.VENTED.BLK*	1	-
5	597873201	THROTTLE *THROTTLE.CABLE.ASSY 39*	1	-
6	586881503	CHOKE CONTROL ASSY *CHOKE.CONTROL.ASM.PUSH-IN*	1	-
7	539107541	IGNITION SWITCH *IGNITION SWITCH*	1	-
8	582107602	SWITCH *SWITCH.PTO.8TERMINAL.STD.RED*	1	-
9	587601501	SWITCH *SWITCH.INTLK.RZ.RFRSH.BUTTON*	2	-
11	585522709	CONTROL PANEL *CONTROL.PANEL.RZ.REFSH.AM.GRY*	1	-
12	532163465	BATTERY *BATTERY.12VOLT.28AMP.WET*	1	-
13	593634404	BRACKET *BRACKET.PNT.BATTERY.MOUNT.EDIP*	1	-
14	582609602	BOX *BOX.PNT.BATTERY.RZ.EDIP*	1	-
15	532131563	COVER *COVER.TERMINAL.RED*	2	-
16	539102759	INSULATOR *INSULATOR-BATTERY*	1	-
17	576618101	TANK VENT *VALVE, FUEL CHECK*	1	-
18	586123906	FUEL HOSE *FUEL.HOSE.SHUT.OFF.ASM.10.18*	1	-
19	582042802	SOLENOID *SOLENOID W/BRASS.PLUNGER.Zn*	1	-
20	587198601	HARNESS *HARNESS.BTTRY.CABLE.RZ.REFRESH*	1	-
21	587044550	HOSE *HOSE.3/16.VAPOR.LINE.50LGTH*	1	-
22	547159601	GROMMET *VITON.GROMMET.FUEL.OUTLET*	1	-
23	584648201	GROMMET *GOMMET.FUEL.CHECK.VALVE*	1	-
24	532139277	NIPPLE	1	-

Ref.	Article N.	Description	Qty	Kit
		ELBOW.FUEL.TANK		
25	594919101	HOUR METER *HOURMETER.SRVMINDER.RECT*	1	-
26	532411935	KEY *IGNITION.KEY*	1	-
27	586108201	HARNESS *CABLE.BATTERY.POS.RZ*	1	-
28	588839401	HOOK *HOOK.J.BATTERY*	2	-
29	545227101	SCREW *SCREW.#6.PLASTITE*	2	-
30	596789701	SCREW *SCR.HEX.1/4-20X5/8*	1	-
31	532141841	SCREW *SCREW.10-16X0.650*	2	-
32	574822701	SCREW *SCREW.SAFETY.SWITCH*	2	-
33	595316801	BOLT *BOLT.BATTERY.BOX*	2	-
34	874760412	BOLT *BOLT.HEX.HD.1/4-20UNC X 3/4*	2	-
35	596135801	BOLT *BOLT.CONSOLE.*	2	-
36	596133601	LOCK NUT *LOCKNUT.KEPS.1/4-20*	2	-
37	521996502	NUT *NUT.BATTERY.BOX*	2	-
38	595086601	NUT *NUT.HEX.1/4-20 ST ZPB*	5	-
39	532123487	HOSE CLAMP *CLAMP.HOSE.BLK*	4	-
40	587044810	HOSE *HOSE.1/4.LOW.PERM.FUEL.LN.10*	1	-
41	587044818	HOSE *HOSE.1/4.LOW.PERM.FUEL.LN.18*	1	-
42	586337301	HARNESS *HARNESS.MAIN.RZ.WITHOUT.BRAKE*	1	-

SEAT

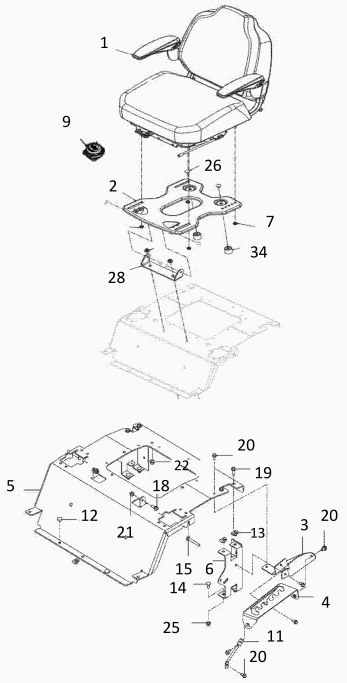

Ref.	Article N.	Description	Qty	Kit
1	536831102	DECAL *DECAL.ZTR.PKBRAKE.AMG.LH*	1	-
2	536831101	DECAL *DECAL.ZTR.INS.PKBRAKE.AMG.RH*	1	-
3	548309502	DECAL *DECAL.Z254FX*	2	-
4	529527001	DECAL *DECAL.ZTR.WARNING.BATTERY.SYMB*	1	-
6	539108385	DECAL *DECAL.DO NOT TOW*	1	-
7	539108386	DECAL *DECAL, EXITING MOWER*	1	-
8	539109803	DECAL *DECAL.SERVICE.RZ.*	1	-
9	537449101	DECAL *DECAL.ZTR.Z200.INST.HUS.AMG.EN*	1	-
12	590810801	DECAL *DECAL.TR/ZTR.DECKWARN.CC.BLK*	1	-
13	589357902	DECAL *DECAL.DECK.CLEARCUT.NOSTEP*	2	-
14	546540701	DECAL *DECAL.ZTR.BLTROUTING.3BLADE*	1	-
15	577469001	DECAL *DECAL.HUSQVARNA.210MM*	1	-
17	537450103	DECAL	1	-

Ref.	Article N.	Description	Qty	Kit
		DECAL.DECK.54:CLEARCUT.BLACK		
18	584904602	DECAL *DECAL.DECK.DEFLECTOR.WARN*	1	-
19	529405301	DECAL *DECAL.BUILTINAMERICA.HUSQ*	1	-
20	591357301	DECAL *DECAL.LOGO.SEATPLATE.RZ.ZTR.HU*	1	-
21	532428677	DECAL *BADGE.CROWN.DECAL*	1	-
1	598736102	PLATE *PLATE.ENG.23RZ.MS431*	1	-
2	581886702	BRACKET *BRACKET.PNT.MUFFLER.EDIP*	1	-
3	548529902	CLUTCH *CLUTCH.STOP.BLACK*	1	-
4	587451202	GUARD *GUARD.MUFFLER.WO.TOW.HITCH.BLK*	1	-
5	539132859	HEAT SHIELD *SHIELD, HEAT*	1	-
6	539131604	MUFFLER ASSY *MUFFLER.ASM.TWIN*	1	-
7	595901501	BOLT *BOLT.CUP.SQ.NCK.5/16-18 X 1.02*	2	-
8	595901601	BOLT *BOLT.CUP.5/16-18 X 3/4.CLR.ZNC*	1	-
9	596135901	BOLT *BOLT.HEX.5/16-18 X 3/4.CLR.ZNC*	4	-
10	594944401	NUT *NUT.HEX.FLNG.5/16-18.NYLOC.CLR*	5	-
11	532448145	ARM *ARM.IDLER*	1	-
12	501603701	BEARING *BEARING.FLANGED.PLASTIC.3/4ID*	2	-
13	582538902	SPINDLE *SPINDLE.IDLER.CLR.ZINC*	1	-
14	582539502	BOLT *BOLT.1/2-13X2.75 GRD5*	1	-
15	521991102	NUT *1/2-13.HEX.FLANGE.NYLOK*	1	-
16	532193197	PULLEY *PULLEY.PNT.IDLER 48PRIMARY*	1	-
17	532193197	PULLEY *PULLEY.IDLER.48PRIMARY*	1	-

Ref.	Article N.	Description	Qty	Kit
18	596433901	SCREW *SCREW.HEX.3/8-16 X 3.54.CLR*	1	-
19	596134901	WASHER *WASHER.PLAIN.3/8 X 7/8*	2	-
20	596240901	NUT *NUT.PREVAIL.3/8-16 X .564*	2	-
21	532196105	SPRING *SPRING.DRIVE.DECK.2006*	1	-
22	587537401	PULLEY *PULLEY.ENGINE*	1	-
23	548504501	SPACER *SPACER.SPACER.1.125.W/OGURA*	1	-
24	592821701	CLUTCH *CLUTCH.OGURA.GT1,5-EH17(D)*	1	-
25	532126197	WASHER *WASHER.1-1/2 ODX15/32 IDX.250*	1	-
26	581332804	BOLT *BOLT.CLUTCH.7/16-20X3.5.GRADE5*	1	-
27	596564402	BOLT *BOLT.HEX.HEAD.3/8-16 X 1-1/4*	4	-
28	596238701	WASHER *WASHER.SPRING.LOCK.381IDX.680*	4	-
29	583955601	TUBE *TUBE EXHAUST LEFT KAWA TWIN*	1	-
30	583955701	TUBE *TUBE EXHAUST RIGHT KAWA TWIN*	1	-
31	532178151	GASKET *GASKET.EXHAUST.KAWASAKI*	2	-
32	532184362	NUT *NUT.HEX.FLANGE.TOPLOCK.M8-1.25*	4	-
33	532131563	COVER *COVER.TERMINAL.RED*	1	-
34	596031501	LOCK NUT *LOCK.NUT.188 X.218.CLEAR.ZINC*	1	-
35	532148456	TUBE *TUBE.EASY_OIL_DRAIN*	1	-
1	585039803	GUARD *GUARD.ENG.HUSQ.RZ.AM.GRY.X685*	1	-
2	589283302	FRAME TUBE *FRAME.TUBE.RZ.MAIN.WELD.LH.ORG*	1	-
3	589283402	FRAME TUBE *FRAME.TUBE.RZ.MAIN.WELD.RH.ORG*	1	-
4	584991002	TUBE	1	-

Ref.	Article N.	Description	Qty	Kit
		TUBE.FRAME.RR.HUSQ.23.RZ.ORG		
5	598712402	PLATE KIT *PLATE.RZ.FOOTREST.AM.GREY.X685*	1	-
6	586703802	FRONT COVER *FRONT.COVER.RZ.FOOTREST.RF.685*	1	-
7	529365102	SUPPORT *SUPPORT.RZ.FOOTREST.PLATE.X431*	1	-
8	587546902	SCREW *SCREW.ASM.5/16-18.ADJ.ISO.TAP*	1	-
9	585916701	LIGHT *LIGHT.ZTR.LED.ASM*	1	-
10	587225201	GROMMET *GROMMET.RUBBER.PUSHIN*	2	-
11	585989301	BUMPER *GROMMET.BUMPER*	7	-
12	585523104	CROSS MEMBER *CROSS.PNT.MEMBER.BLK*	1	-
13	587458602	BRACKET *BRACKET.SKIDPLTE.LED.RFRSHX417*	1	-
14	585331502	COVER *COVER.RAIL.LH.RZ.x668*	1	-
15	585331602	COVER *COVER.RAIL.RH.RZ.x668*	1	-
16	597783101	KNOB *KNOB.3WING.5/16-18.CLR.ZN*	1	-
17	585474302	BRACKET *ROD.BYPASS.EZT.X431*	2	-
18	593682604	SUPPORT *SUPPORT.RZ.LH.CONSOLE.BLK*	1	-
19	580501302	BRACKET *FENDER.SUPPORT.PNT.X431*	2	-
20	593118304	SUPPORT *SUPPORT.RZ.CONSOLE.RH.MS431*	1	-
21	586654302	BOLT *BOLT.SHOULDER.3/8-16X3.GR5 CLR*	2	-
22	586881101	BOLT *BOLT.5/16-18.THRD.ROLL.SHOULDR*	2	-
23	817000510	BOLT *BOLT.5/16-18HEX.WHS.HD.LCKSERR*	7	-
24	595316601	BOLT *BOLT.HHD FLNG 5/16-18X2.75 GR5*	3	-
25	596564405	BOLT *BOLT.HEX.HEAD.3/8-16 X 3*	8	-

Ref.	Article N.	Description	Qty	Kit
26	574233802	SCREW *HHFS.5/16 X 2.25 GD5.CLR.ZINC*	8	-
27	577117702	BOLT *HHFS.3/8-16 X 3.GR5.CLEAR.ZINC*	4	-
28	596321701	SCREW *SCREW.#10 X 0.750.BOS.THREAD*	6	-
29	817580520	BOLT *SCREW.THDROL.5/16-18X1.25 TYTT*	2	-
30	596434001	SCREW *SCREW.#10X0.500.BOS.THREAD*	2	-
31	521996502	NUT *NUT.HEX.LOCK.W/FLANGE.3/8-16*	14	-
32	594944401	NUT *NUT.HEX.FLNG.5/16-18.NYLOC.CLR*	16	-
34	595901901	NUT *NUT.7/16-14.GR5.CLR.ZINC*	2	-
36	532423063	WASHER *PALNUT.5/16*	1	-
39	593842101	BUSHING *BUSHING*	2	-
40	521938102	LINK *LINK.FRINT.SUSP.CLEAR.ZINC*	1	-
41	595901901	NUT *NUT.7/16-14.GR5.CLR.ZINC*	2	-
42	586548101	HARNESS *HARNESS.LED.LIGHT.RZ*	1	-
1	548325202	TRANSMISSION *TRANSMISSION.EZT.SHORT.20.RT*	1	-
2	548325201	TRANSMISSION *TRANSMISSION.EZT.SHORT.20.LT*	1	-
3	580806602	BRACKET *BRACKET.EZT.MOUNT.REAR.PNTX431*	2	-
4	595316601	BOLT *BOLT.HHD FLNG 5/16-18X2.75 GR5*	4	-
5	594944401	NUT *NUT.HEX.FLNG.5/16-18.NYLOC.CLR*	6	-
6	593852803	SPACER *SPACER.TUBE.EZT.6.810*	2	-
7	596581901	BOLT *BOLT.HEXAGON.3/8-16 X 2-1/2*	4	-
8	596565301	WASHER *WASHER;3/8X0.08IN.ST.CLR.ZINC*	4	-
9	596238701	WASHER	4	-

Ref.	Article N.	Description	Qty	Kit
		WASHER.SPRING.LOCK.381IDX.680		
10	580806502	SUPPORT *SUPPORT.FRONT.TRANS.PNTX431*	2	-
11	574233802	SCREW *HHFS.5/16 X 2.25 GD5.CLR.ZINC*	2	-
12	596930401	LINKAGE *LINKAGE.BRAKE.LT.CLR.ZINC*	1	-
13	596930701	LINKAGE *LINKAGE.BRAKE.RH.CLR.ZINC*	1	-
14	587115301	PIN *PIN.CLEVIS.3/16X.475*	1	-
15	587225301	PIN *PIN COTTER;LOCKING;BOWTIE;1IN*	1	-
16	596299801	SPRING *SPRING.BRAKE.ROD.CLEAR.ZINC*	2	-
17	595086601	NUT *NUT.HEX.1/4-20 ST ZPB*	2	-
18	596582301	WASHER *WASHER 0.28 X 0.63 CLR.ZN*	4	-
19	585474402	ROD *ROD.BYPASS.LH.EZT.CLEAR.ZINC*	1	-
20	585474502	ROD *ROD.BYPASS.RH.EZT.CLEAR.ZINC*	1	-
21	596580601	PIN *PIN.RETAINING.1-7/16 X 0.073*	4	-
22	586665101	SPRING *SPRING.ROD.BYPASS.EZT*	2	-
23	587653903	NUT *NUT.1/2-20UNF-2B.1/2-20X3/4GR8*	8	-
24	539110411	DRIVE BELT *Drive BELT, EZT'S*	1	-
1	596327001	SERVICE KIT *DECK.54CC.WELDMT.RZ*	1	-
2	592951801	DRIVE BELT	1	-
3	582760502	BLADE *BLADE.54CC.HI-LIFT.PZ.165.431*	3	-
4	590304407	COVER *COVER.PNT.54CC.MDRL.LH.ZTR.GRY*	1	-
5	590304207	COVER *COVER.PNT.54CC.MANDREL.RH.GREY*	1	-
6	534214702	HOUSING ASSY *HOUSING.ASM.NO-GREASE.CASTIRON*	3	-
7	589527301	WHEEL	4	-

Ref.	Article N.	Description	Qty	Kit
		WHEEL.GAUGE.WIDE(RALLY)		
8	574169601	ROLLER *ROLLER, GAUGE .635 BORE*	2	-
9	532175708	PULLEY ASSY *PULLEY.MANDREL.CRD 107CM.DOM.*	3	-
10	532197379	PULLEY *PULLEY.IDLER.4,5.X431*	2	-
11	532197380	PULLEY *PULLEY.IDLER.4,5.SPACER.X431*	1	-
12	590632204	DEFLECTOR ASSY *DEFLECTOR.ASM.54CC.RES.BLACK*	1	-
13	595297001	ROD *ROD.HINGE*	1	-
14	585323901	BEARING *BEARING.MANDREL.TOP.EXTENDED*	3	-
15	582219602	ARM *ARM.PNT.IDLER.CLEARCUT.54.EDIP*	1	-
16	536050602	LINK *ARM.FIXED.MOWER.SUSP.X431*	2	-
17	532415598	HOSE COUPLING *PORT.WASHOUT*	1	-
18	532416405	COUPLING *COUPLING.QUICK-CONNECT*	1	-
19	596482001	SPRING *SPRING.CLEAR.ZINC*	2	-
20	587354701	SPRING *SPRING.DEFLECTOR*	1	-
21	532197251	SPRING *USE FOR SERIAL # STARTING 02012025*000000 & AFTER*	1	-
21	587358401	SPRING *SPRING.EXTN.42FCS.TR.DECK.DRV*	1	-
22	574196502	TUBE *TUBE.ROLLER.AXLE.LONG.CLR.ZINC*	1	-
23	587256501	SHAFT *SHAFT ASM.MNDRL.N/GREASEABLE*	3	-
24	589813301	PLUG *PLUG.TREE..203HOLE.BLK*	3	-
25	590732501	BUMPER ASSY *BUMPER.ASM.54CC.TRIMSIDE.HUSQ*	1	-
26	532194209	SPRING *PIN.COTTER.7/16.BOW TIE LOCK*	2	-
27	593824001	STUD *STUD.W/DANTI-ROTATION*	2	-

Ref.	Article N.	Description	Qty	Kit
28	532170165	BOLT *BOLT.SHOULDER.5/16-18 TT*	2	-
29	596434404	BOLT *BOLT.SHOULDER.3/8-16X3-5/8*	4	-
30	584309301	SCREW *SCREW.SEMS.7/16-20X1.HEX.HEAD*	3	-
31	596240801	BOLT *BOLT.EYELET.5/16-18 X 3-1/2*	1	-
32	584953901	BOLT *BOLT.HEX.WSHRHD.313-18X1.19*	12	-
33	596136301	BOLT *BOLT.CUP.HEAD.3/8-16 X 2*	1	-
34	594944501	BOLT *BLT.CUP.HD.SQR.1/2-13X8.0 G5*	1	-
35	532196539	BOLT *BOLT.SHOULDER*	2	-
36	532137729	SCREW *SCREW.THD.ROLL.1/4-20 X 5/8*	9	-
37	599972501	BOLT *BOLT.HEX.GR8.CLR.Zn*	1	-
38	588438301	SCREW *SCREW.7/16-14 X 2.125.WASHER*	1	-
39	596134801	HEXAGON NUT *NUT.HEX.9/16-18 X 1.010*	3	-
40	873900600	NUT *NUT.LOCK.FLG.3/8-16UNC*	5	-
41	521991102	NUT *1/2-13.HEX.FLANGE.NYLOK*	1	-
42	596039201	LOCK NUT *NUT.SER.FLANGE.LOCKNUT.5/16-18*	2	-
43	596135701	LOCK NUT *NUT.LOCK.PRVL.TORQ.5/16-18X.68*	2	-
44	532110452	NUT *NUT.PUSH.PIN.HINGE.PHOS.&.OIL*	1	-
45	532178515	WASHER *WASHER.FLAT.HARDENED*	1	-
47	819191912	WASHER *WASHER.1-5/32 X 19/32 X 12GA*	2	-
48	598752001	MANDREL *MANDREL.CAST.IRON*	3	-
49	521938102	LINK *LINK.FRINT.SUSP.CLEAR.ZINC*	1	-
1	586429702	SHAFT ASSY	1	-

Ref.	Article N.	Description	Qty	Kit
		SHAFT ASSY		
2	586457101	LINK *LINK*	1	-
3	586457201	LINK *LINK*	1	-
4	587622901	LIFTING LEVER ASSY *LIFTING LEVER ASSY*	1	-
5	580486102	SPACER *SPACER*	2	-
6	585682102	BRACKET *BRACKET*	2	-
7	587623001	LINK ASSY *LINK ASSY*	2	-
7	596766601	LINK ARM ASSY *LINK*	2	-
8	525847202	LINK *LINK ASSY*	2	-
9	587140502	ARM *ARM*	2	-
10	587623001	LINK ASSY *LINK ASSY*	2	-
11	532411555	GRIP *GRIP*	2	-
12	586867601	SPRING *SPRING*	4	-
13	532196314	SPRING *SPRING*	1	-
14	596482001	SPRING *SPRING*	2	-
15	593824001	STUD *STUD*	2	-
16	532194208	PIN *PIN*	2	-
17	587225301	PIN *PIN*	4	-
18	532194209	SPRING *SPRING*	1	-
19	510184901	BUSHING *BUSHING*	2	-
20	585701401	PIN *PIN*	2	-
21	532194209	SPRING *SPRING*	2	-

Ref.	Article N.	Description	Qty	Kit
22	585682001	ROD *ROD*	2	-
23	586457401	BELLCRANK *BELLCRANK*	1	-
24	586457501	BELLCRANK *BELLCRANK*	1	-
25	532196539	BOLT *BOLT*	2	-
26	586561301	SCREW *SCREW*	2	-
27	532137729	SCREW *SCREW*	2	-
28	596135701	LOCK NUT *NUT*	2	-
30	589464902	NUT *NUT*	2	-
31	596320001	WASHER *WASHER*	2	-
32	596565301	WASHER *WASHER*	2	-
33	812000002	RETAINER RING *RETAINER RING*	1	-
1	548323801	SEAT *SEAT.18.LOW.PROFILE.SUSPENSION*	1	-
1	540603801	SEAT *FOR 97084740100, 97084750100*	1	-
2	598001601	SERVICE KIT *PLATE.MOUNTING.SK121.EDIP*	1	-
3	586220802	SUPPORT PLATE *PLATE.SUPPORT.DECK.LIFT*	1	-
4	586221202	PLATE *PLATE.DECK.LIFT.X431*	1	-
5	597160003	PLATE *PLATE.SEAT.SUPPORT.RZ.RVS.X668*	1	-
6	580308202	SUPPORT *SUPPORT.REAR.SEAT.PNT431*	2	-
7	873970500	NUT *NUT.LOCK.HEX.FLANGE*	4	-
9	539132140	SWITCH *SEAT.SWITCH*	1	-
9	540670401	SWITCH *FOR 97084740100, 97084750100*	1	-
11	586428601	SUPPORT LEG	1	-

Ref.	Article N.	Description	Qty	Kit
		SUPPORT.LEG.DECK.LIFT		
12	585989301	BUMPER *GROMMET.BUMPER*	2	-
13	539104763	CLIP *CLIP*	5	-
14	539990316	BOLT *BOLT*	4	-
15	510422701	SCREW *SCREW*	2	-
18	596240701	BOLT *BOLT*	2	-
19	874490512	BOLT *BOLT*	4	-
20	817000510	BOLT *BOLT*	6	-
21	594944401	NUT *NUT*	2	-
22	521996502	NUT *NUT.FLANGE.*	2	-
26	597869301	BOLT *BOLT.CARRI.SQUR.3/8X.45.CLR Zn*	2	-
28	597330002	BRACKET *BRCKT.SEAT.PIVOT.SK121.RZ.X431*	1	-
34	597553401	BUMPER *BUMPER.3/8-16.INTERNAL THREAD*	2	-
1	598851703	TUBE *TUBE.RZ.LEVER.W/GRIP.RT X428*	1	-
2	598851704	TUBE *TUBE.RZ.LEVER.W/GRIP.LT X428*	1	-
3	585124705	BRACKET *BRACKET.CONTROLS.ZTR.E-DIP*	2	-
4	539131518	BEARING *BEARING, FLANGE*	2	-
5	576140301	LEVER *LEVER.CONTROL*	2	-
6	587601703	LEVER *CNTRL.LEVER.*	2	-
7	584927201	SPACER *SPACER.PIVOT.CONTROL*	2	-
8	539102720	GAS SPRING *DAMPENER*	2	-
9	547930201	BLOCK *BLOCK.TRACKING.CONTROL.REC.BLK*	2	-

Ref.	Article N.	Description	Qty	Kit
12	588604902	ROD *ROD.ASM.RH.ADJUSTABLE.*	1	-
13	588605002	ROD *ROD.ASM.LH.ADJUSTABLE.*	1	-
14	537602401	CLIP *CLIP.R-CLIP*	2	-
15	587601501	SWITCH *SWITCH.INTLK.RZ.RFRSH.BUTTON*	2	-
16	596434301	BOLT *BOLT.HX.1/2-13 X 2-3/4.CLR.ZNC*	2	-
17	585986101	BOLT *SCREW.SHAKEPROOF.1.25.BLACK*	2	-
18	592858702	BOLT *BOLT.5/16-18X.75.HEX.FLANGE*	8	-
19	596580801	BOLT *BOLT.HEX.SCREW.5/16-18 X 1*	2	-
20	587885301	SCREW *SCREW.CAP.SOCKET.6PT.5/16-18*	2	-
21	525544002	BOLT *BOLT.HEXAGON.HEAD.5/16-18X1.25*	4	-
22	574822701	SCREW *SCR #10-24 X .75 SKT HD BLK ZN*	2	-
23	539108010	NUT *NUT 1/2-13HX JM NYL INST GR2ZN*	2	-
24	594944401	NUT *NUT.HEX.FLNG.5/16-18.NYLOC.CLR*	10	-
25	596583702	NUT *NUT.HEX.5/16-18.NYLOC.BLK_ZINC*	4	-
26	596039201	LOCK NUT *NUT.SER.FLANGE.LOCKNUT.5/16-18*	4	-
27	532423063	WASHER	1	-
1	536856401	WHEEL ASSY *WHEEL.ASM.K3012.20x10.BLACK*	2	-
2	580830801	WHEEL ASSY *WHEEL.ASSY.FRONT.CASTER.11X6-5*	2	-
2	595910102	WHEEL ASSY *FOR 97084740100, 97084750100*	1	-
3	586650310	YOKE *YOKE.CASTER.ASM.6.AM.GRY.X685*	2	-
4	596623501	VALVE *VALVE.ZERK.1/2.DRIVE IN*	2	-
5	539103300	NIPPLE *VALVE.ZERK.1/4*	2	-

Ref.	Article N.	Description	Qty	Kit
6	539112660	BEARING *BEARING, FLANGED*	2	-
7	539117901	BLADE BUSHING *CASTER BUSHING*	2	-
8	595281301	CAP *CAP GREASE*	2	-
9	596301001	PLUG *PLUG.CASTER.CLEAR.ZINC*	2	-
10	585995401	SPACER *SPACER.PIVOT*	2	-
11	596388901	SPRING *SPRING.CASTER.CLEAR.ZINC*	2	-
12	596319901	SCREW *SCREW.HEX.5/16-18 X 1 GR5*	2	-
13	576601503	SCREW *BOLT.RHSNB; 1/2-13 X 7.5*	2	-
14	521991103	NUT *NUT.LOCK 1/2-13 NYLOK.BLK.Zn*	2	-
15	587653903	NUT *NUT.1/2-20UNF-2B.1/2-20X3/4GR8*	8	-
16	596319801	WASHER *WASHER.1.025 X 1.625 X 0.063*	2	-
1	598602606	CONSOLE ASSY *CONSOLE.ASM.RZ.RH.AMG.MS685*	1	-
2	586621203	CONSOLE ASSY *CONSOLE.RZ.REFRESH.LH.MS685*	1	-
3	531016704	FUEL TANK ASSY *FUEL.TANK.ASM.RZ.2.25 2024*	1	-
4	529979701	HARNESS *FUEL.CAP.VENTED.BLK*	1	-
5	597873201	THROTTLE *THROTTLE.CABLE.ASSY 39*	1	-
6	586881503	CHOKE CONTROL ASSY *CHOKE.CONTROL.ASM.PUSH-IN*	1	-
7	539107541	IGNITION SWITCH *IGNITION SWITCH*	1	-
8	582107602	SWITCH *SWITCH.PTO.8TERMINAL.STD.RED*	1	-
9	587601501	SWITCH *SWITCH.INTLK.RZ.RFRSH.BUTTON*	2	-
11	585522709	CONTROL PANEL *CONTROL.PANEL.RZ.REFSH.AM.GRY*	1	-
12	532163465	BATTERY	1	-

Ref.	Article N.	Description	Qty	Kit
		BATTERY.12VOLT.28AMP.WET		
13	593634404	BRACKET *BRACKET.PNT.BATTERY.MOUNT.EDIP*	1	-
14	582609602	BOX *BOX.PNT.BATTERY.RZ.EDIP*	1	-
15	532131563	COVER *COVER.TERMINAL.RED*	2	-
16	539102759	INSULATOR *INSULATOR-BATTERY*	1	-
17	576618101	TANK VENT *VALVE, FUEL CHECK*	1	-
18	586123906	FUEL HOSE *FUEL.HOSE.SHUT.OFF.ASM.10.18*	1	-
19	582042802	SOLENOID *SOLENOID W/BRASS.PLUNGER.Zn*	1	-
20	587198601	HARNESS *HARNESS.BTTRY.CABLE.RZ.REFRESH*	1	-
21	587044550	HOSE *HOSE.3/16.VAPOR.LINE.50LGTH*	1	-
22	547159601	GROMMET *VITON.GROMMET.FUEL.OUTLET*	1	-
23	584648201	GROMMET *GOMMET.FUEL.CHECK.VALVE*	1	-
24	532139277	NIPPLE *ELBOW.FUEL.TANK*	1	-
25	594919101	HOUR METER *HOURMETER.SRVMINDER.RECT*	1	-
26	532411935	KEY *IGNITION.KEY*	1	-
27	586108201	HARNESS *CABLE.BATTERY.POS.RZ*	1	-
28	588839401	HOOK *HOOK.J.BATTERY*	2	-
29	545227101	SCREW *SCREW.#6.PLASTITE*	2	-
30	596789701	SCREW *SCR.HEX.1/4-20X5/8*	1	-
31	532141841	SCREW *SCREW.10-16X0.650*	2	-
32	574822701	SCREW *SCREW.SAFETY.SWITCH*	2	-
33	595316801	BOLT *BOLT.BATTERY.BOX*	2	-

Ref.	Article N.	Description	Qty	Kit
34	874760412	BOLT *BOLT.HEX.HD.1/4-20UNC X 3/4*	2	-
35	596135801	BOLT *BOLT.CONSOLE.*	2	-
36	596133601	LOCK NUT *LOCKNUT.KEPS.1/4-20*	2	-
37	521996502	NUT *NUT.BATTERY.BOX*	2	-
38	595086601	NUT *NUT.HEX.1/4-20 ST ZPB*	5	-
39	532123487	HOSE CLAMP *CLAMP.HOSE.BLK*	4	-
40	587044810	HOSE *HOSE.1/4.LOW.PERM.FUEL.LN.10*	1	-
41	587044818	HOSE *HOSE.1/4.LOW.PERM.FUEL.LN.18*	1	-
42	586337301	HARNESS *HARNESS.MAIN.RZ.WITHOUT.BRAKE*	1	-

STEERING

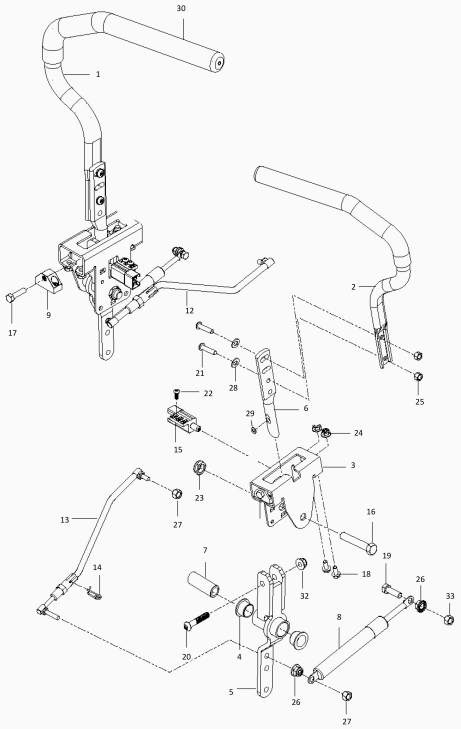

Ref.	Article N.	Description	Qty	Kit
1	536831102	DECAL	1	-

Ref.	Article N.	Description	Qty	Kit
		DECAL.ZTR.PKBRAKE.AMG.LH		
2	536831101	DECAL *DECAL.ZTR.INS.PKBRAKE.AMG.RH*	1	-
3	548309502	DECAL *DECAL.Z254FX*	2	-
4	529527001	DECAL *DECAL.ZTR.WARNING.BATTERY.SYMB*	1	-
6	539108385	DECAL *DECAL.DO NOT TOW*	1	-
7	539108386	DECAL *DECAL, EXITING MOWER*	1	-
8	539109803	DECAL *DECAL.SERVICE.RZ.*	1	-
9	537449101	DECAL *DECAL.ZTR.Z200.INST.HUS.AMG.EN*	1	-
12	590810801	DECAL *DECAL.TR/ZTR.DECKWARN.CC.BLK*	1	-
13	589357902	DECAL *DECAL.DECK.CLEARCUT.NOSTEP*	2	-
14	546540701	DECAL *DECAL.ZTR.BLTROUTING.3BLADE*	1	-
15	577469001	DECAL *DECAL.HUSQVARNA.210MM*	1	-
17	537450103	DECAL *DECAL.DECK.54:CLEARCUT.BLACK*	1	-
18	584904602	DECAL *DECAL.DECK.DEFLECTOR.WARN*	1	-
19	529405301	DECAL *DECAL.BUILTINAMERICA.HUSQ*	1	-
20	591357301	DECAL *DECAL.LOGO.SEATPLATE.RZ.ZTR.HU*	1	-
21	532428677	DECAL *BADGE.CROWN.DECAL*	1	-
1	598736102	PLATE *PLATE.ENG.23RZ.MS431*	1	-
2	581886702	BRACKET *BRACKET.PNT.MUFFLER.EDIP*	1	-
3	548529902	CLUTCH *CLUTCH.STOP.BLACK*	1	-
4	587451202	GUARD *GUARD.MUFFLER.WO.TOW.HITCH.BLK*	1	-
5	539132859	HEAT SHIELD *SHIELD, HEAT*	1	-

Ref.	Article N.	Description	Qty	Kit
6	539131604	MUFFLER ASSY *MUFFLER.ASM.TWIN*	1	-
7	595901501	BOLT *BOLT.CUP.SQ.NCK.5/16-18 X 1.02*	2	-
8	595901601	BOLT *BOLT.CUP.5/16-18 X 3/4.CLR.ZNC*	1	-
9	596135901	BOLT *BOLT.HEX.5/16-18 X 3/4.CLR.ZNC*	4	-
10	594944401	NUT *NUT.HEX.FLNG.5/16-18.NYLOC.CLR*	5	-
11	532448145	ARM *ARM.IDLER*	1	-
12	501603701	BEARING *BEARING.FLANGED.PLASTIC.3/4ID*	2	-
13	582538902	SPINDLE *SPINDLE.IDLER.CLR.ZINC*	1	-
14	582539502	BOLT *BOLT.1/2-13X2.75 GRD5*	1	-
15	521991102	NUT *1/2-13.HEX.FLANGE.NYLOK*	1	-
16	532193197	PULLEY *PULLEY.PNT.IDLER 48PRIMARY*	1	-
17	532193197	PULLEY *PULLEY.IDLER.48PRIMARY*	1	-
18	596433901	SCREW *SCREW.HEX.3/8-16 X 3.54.CLR*	1	-
19	596134901	WASHER *WASHER.PLAIN.3/8 X 7/8*	2	-
20	596240901	NUT *NUT.PREVAIL.3/8-16 X .564*	2	-
21	532196105	SPRING *SPRING.DRIVE.DECK.2006*	1	-
22	587537401	PULLEY *PULLEY.ENGINE*	1	-
23	548504501	SPACER *SPACER.SPACER.1.125.W/OGURA*	1	-
24	592821701	CLUTCH *CLUTCH.OGURA.GT1,5-EH17(D)*	1	-
25	532126197	WASHER *WASHER.1-1/2 ODX15/32 IDX.250*	1	-
26	581332804	BOLT *BOLT.CLUTCH.7/16-20X3.5.GRADE5*	1	-
27	596564402	BOLT	4	-

Ref.	Article N.	Description	Qty	Kit
		BOLT.HEX.HEAD.3/8-16 X 1-1/4		
28	596238701	WASHER *WASHER.SPRING.LOCK.381IDX.680*	4	-
29	583955601	TUBE *TUBE EXHAUST LEFT KAWA TWIN*	1	-
30	583955701	TUBE *TUBE EXHAUST RIGHT KAWA TWIN*	1	-
31	532178151	GASKET *GASKET.EXHAUST.KAWASAKI*	2	-
32	532184362	NUT *NUT.HEX.FLANGE.TOPLOCK.M8-1.25*	4	-
33	532131563	COVER *COVER.TERMINAL.RED*	1	-
34	596031501	LOCK NUT *LOCK.NUT.188 X.218.CLEAR.ZINC*	1	-
35	532148456	TUBE *TUBE.EASY_OIL_DRAIN*	1	-
1	585039803	GUARD *GUARD.ENG.HUSQ.RZ.AM.GRY.X685*	1	-
2	589283302	FRAME TUBE *FRAME.TUBE.RZ.MAIN.WELD.LH.ORG*	1	-
3	589283402	FRAME TUBE *FRAME.TUBE.RZ.MAIN.WELD.RH.ORG*	1	-
4	584991002	TUBE *TUBE.FRAME.RR.HUSQ.23.RZ.ORG*	1	-
5	598712402	PLATE KIT *PLATE.RZ.FOOTREST.AM.GREY.X685*	1	-
6	586703802	FRONT COVER *FRONT.COVER.RZ.FOOTREST.RF.685*	1	-
7	529365102	SUPPORT *SUPPORT.RZ.FOOTREST.PLATE.X431*	1	-
8	587546902	SCREW *SCREW.ASM.5/16-18.ADJ.ISO.TAP*	1	-
9	585916701	LIGHT *LIGHT.ZTR.LED.ASM*	1	-
10	587225201	GROMMET *GROMMET.RUBBER.PUSHIN*	2	-
11	585989301	BUMPER *GROMMET.BUMPER*	7	-
12	585523104	CROSS MEMBER *CROSS.PNT.MEMBER.BLK*	1	-
13	587458602	BRACKET *BRACKET.SKIDPLTE.LED.RFRSHX417*	1	-

Ref.	Article N.	Description	Qty	Kit
14	585331502	COVER *COVER.RAIL.LH.RZ.x668*	1	-
15	585331602	COVER *COVER.RAIL.RH.RZ.x668*	1	-
16	597783101	KNOB *KNOB.3WING.5/16-18.CLR.ZN*	1	-
17	585474302	BRACKET *ROD.BYPASS.EZT.X431*	2	-
18	593682604	SUPPORT *SUPPORT.RZ.LH.CONSOLE.BLK*	1	-
19	580501302	BRACKET *FENDER.SUPPORT.PNT.X431*	2	-
20	593118304	SUPPORT *SUPPORT.RZ.CONSOLE.RH.MS431*	1	-
21	586654302	BOLT *BOLT.SHOULDER.3/8-16X3.GR5 CLR*	2	-
22	586881101	BOLT *BOLT.5/16-18.THRD.ROLL.SHOULDR*	2	-
23	817000510	BOLT *BOLT.5/16-18HEX.WHS.HD.LCKSERR*	7	-
24	595316601	BOLT *BOLT.HHD FLNG 5/16-18X2.75 GR5*	3	-
25	596564405	BOLT *BOLT.HEX.HEAD.3/8-16 X 3*	8	-
26	574233802	SCREW *HHFS.5/16 X 2.25 GD5.CLR.ZINC*	8	-
27	577117702	BOLT *HHFS.3/8-16 X 3.GR5.CLEAR.ZINC*	4	-
28	596321701	SCREW *SCREW.#10 X 0.750.BOS.THREAD*	6	-
29	817580520	BOLT *SCREW.THDROL.5/16-18X1.25 TYTT*	2	-
30	596434001	SCREW *SCREW.#10X0.500.BOS.THREAD*	2	-
31	521996502	NUT *NUT.HEX.LOCK.W/FLANGE.3/8-16*	14	-
32	594944401	NUT *NUT.HEX.FLNG.5/16-18.NYLOC.CLR*	16	-
34	595901901	NUT *NUT.7/16-14.GR5.CLR.ZINC*	2	-
36	532423063	WASHER *PALNUT.5/16*	1	-
39	593842101	BUSHING	2	-

Ref.	Article N.	Description	Qty	Kit
		BUSHING		
40	521938102	LINK *LINK.FRINT.SUSP.CLEAR.ZINC*	1	-
41	595901901	NUT *NUT.7/16-14.GR5.CLR.ZINC*	2	-
42	586548101	HARNESS *HARNESS.LED.LIGHT.RZ*	1	-
1	548325202	TRANSMISSION *TRANSMISSION.EZT.SHORT.20.RT*	1	-
2	548325201	TRANSMISSION *TRANSMISSION.EZT.SHORT.20.LT*	1	-
3	580806602	BRACKET *BRACKET.EZT.MOUNT.REAR.PNTX431*	2	-
4	595316601	BOLT *BOLT.HHD FLNG 5/16-18X2.75 GR5*	4	-
5	594944401	NUT *NUT.HEX.FLNG.5/16-18.NYLOC.CLR*	6	-
6	593852803	SPACER *SPACER.TUBE.EZT.6.810*	2	-
7	596581901	BOLT *BOLT.HEXAGON.3/8-16 X 2-1/2*	4	-
8	596565301	WASHER *WASHER;3/8X0.08IN.ST.CLR.ZINC*	4	-
9	596238701	WASHER *WASHER.SPRING.LOCK.381IDX.680*	4	-
10	580806502	SUPPORT *SUPPORT.FRONT.TRANS.PNTX431*	2	-
11	574233802	SCREW *HHFS.5/16 X 2.25 GD5.CLR.ZINC*	2	-
12	596930401	LINKAGE *LINKAGE.BRAKE.LT.CLR.ZINC*	1	-
13	596930701	LINKAGE *LINKAGE.BRAKE.RH.CLR.ZINC*	1	-
14	587115301	PIN *PIN.CLEVIS.3/16X.475*	1	-
15	587225301	PIN *PIN COTTER;LOCKING;BOWTIE;1IN*	1	-
16	596299801	SPRING *SPRING.BRAKE.ROD.CLEAR.ZINC*	2	-
17	595086601	NUT *NUT.HEX.1/4-20 ST ZPB*	2	-
18	596582301	WASHER *WASHER 0.28 X 0.63 CLR.ZN*	4	-

Ref.	Article N.	Description	Qty	Kit
19	585474402	ROD *ROD.BYPASS.LH.EZT.CLEAR.ZINC*	1	-
20	585474502	ROD *ROD.BYPASS.RH.EZT.CLEAR.ZINC*	1	-
21	596580601	PIN *PIN.RETAINING.1-7/16 X 0.073*	4	-
22	586665101	SPRING *SPRING.ROD.BYPASS.EZT*	2	-
23	587653903	NUT *NUT.1/2-20UNF-2B.1/2-20X3/4GR8*	8	-
24	539110411	DRIVE BELT *Drive BELT, EZT'S*	1	-
1	596327001	SERVICE KIT *DECK.54CC.WELDMT.RZ*	1	-
2	592951801	DRIVE BELT	1	-
3	582760502	BLADE *BLADE.54CC.HI-LIFT.PZ.165.431*	3	-
4	590304407	COVER *COVER.PNT.54CC.MDRL.LH.ZTR.GRY*	1	-
5	590304207	COVER *COVER.PNT.54CC.MANDREL.RH.GREY*	1	-
6	534214702	HOUSING ASSY *HOUSING.ASM.NO-GREASE.CASTIRON*	3	-
7	589527301	WHEEL *WHEEL.GAUGE.WIDE(RALLY)*	4	-
8	574169601	ROLLER *ROLLER, GAUGE .635 BORE*	2	-
9	532175708	PULLEY ASSY *PULLEY.MANDREL.CRD 107CM.DOM.*	3	-
10	532197379	PULLEY *PULLEY.IDLER.4,5.X431*	2	-
11	532197380	PULLEY *PULLEY.IDLER.4,5.SPACER.X431*	1	-
12	590632204	DEFLECTOR ASSY *DEFLECTOR.ASM.54CC.RES.BLACK*	1	-
13	595297001	ROD *ROD.HINGE*	1	-
14	585323901	BEARING *BEARING.MANDREL.TOP.EXTENDED*	3	-
15	582219602	ARM *ARM.PNT.IDLER.CLEARCUT.54.EDIP*	1	-
16	536050602	LINK *ARM.FIXED.MOWER.SUSP.X431*	2	-

Ref.	Article N.	Description	Qty	Kit
17	532415598	HOSE COUPLING *PORT.WASHOUT*	1	-
18	532416405	COUPLING *COUPLING.QUICK-CONNECT*	1	-
19	596482001	SPRING *SPRING.CLEAR.ZINC*	2	-
20	587354701	SPRING *SPRING.DEFLECTOR*	1	-
21	532197251	SPRING *USE FOR SERIAL # STARTING 02012025*000000 & AFTER*	1	-
21	587358401	SPRING *SPRING.EXTN.42FCS.TR.DECK.DRV*	1	-
22	574196502	TUBE *TUBE.ROLLER.AXLE.LONG.CLR.ZINC*	1	-
23	587256501	SHAFT *SHAFT ASM.MNDRL.N/GREASEABLE*	3	-
24	589813301	PLUG *PLUG.TREE..203HOLE.BLK*	3	-
25	590732501	BUMPER ASSY *BUMPER.ASM.54CC.TRIMSIDE.HUSQ*	1	-
26	532194209	SPRING *PIN.COTTER.7/16.BOW TIE LOCK*	2	-
27	593824001	STUD *STUD.W/DANTI-ROTATION*	2	-
28	532170165	BOLT *BOLT.SHOULDER.5/16-18 TT*	2	-
29	596434404	BOLT *BOLT.SHOULDER.3/8-16X3-5/8*	4	-
30	584309301	SCREW *SCREW.SEMS.7/16-20X1.HEX.HEAD*	3	-
31	596240801	BOLT *BOLT.EYELET.5/16-18 X 3-1/2*	1	-
32	584953901	BOLT *BOLT.HEX.WSHRHD.313-18X1.19*	12	-
33	596136301	BOLT *BOLT.CUP.HEAD.3/8-16 X 2*	1	-
34	594944501	BOLT *BLT.CUP.HD.SQR.1/2-13X8.0 G5*	1	-
35	532196539	BOLT *BOLT.SHOULDER*	2	-
36	532137729	SCREW *SCREW.THD.ROLL.1/4-20 X 5/8*	9	-
37	599972501	BOLT	1	-

Ref.	Article N.	Description	Qty	Kit
		BOLT.HEX.GR8.CLR.Zn		
38	588438301	SCREW *SCREW.7/16-14 X 2.125.WASHER*	1	-
39	596134801	HEXAGON NUT *NUT.HEX.9/16-18 X 1.010*	3	-
40	873900600	NUT *NUT.LOCK.FLG.3/8-16UNC*	5	-
41	521991102	NUT *1/2-13.HEX.FLANGE.NYLOK*	1	-
42	596039201	LOCK NUT *NUT.SER.FLANGE.LOCKNUT.5/16-18*	2	-
43	596135701	LOCK NUT *NUT.LOCK.PRVL.TORQ.5/16-18X.68*	2	-
44	532110452	NUT *NUT.PUSH.PIN.HINGE.PHOS.&.OIL*	1	-
45	532178515	WASHER *WASHER.FLAT.HARDENED*	1	-
47	819191912	WASHER *WASHER.1-5/32 X 19/32 X 12GA*	2	-
48	598752001	MANDREL *MANDREL.CAST.IRON*	3	-
49	521938102	LINK *LINK.FRINT.SUSP.CLEAR.ZINC*	1	-
1	586429702	SHAFT ASSY *SHAFT ASSY*	1	-
2	586457101	LINK *LINK*	1	-
3	586457201	LINK *LINK*	1	-
4	587622901	LIFTING LEVER ASSY *LIFTING LEVER ASSY*	1	-
5	580486102	SPACER *SPACER*	2	-
6	585682102	BRACKET *BRACKET*	2	-
7	587623001	LINK ASSY *LINK ASSY*	2	-
7	596766601	LINK ARM ASSY *LINK*	2	-
8	525847202	LINK *LINK ASSY*	2	-
9	587140502	ARM *ARM*	2	-

Ref.	Article N.	Description	Qty	Kit
10	587623001	LINK ASSY *LINK ASSY*	2	-
11	532411555	GRIP *GRIP*	2	-
12	586867601	SPRING *SPRING*	4	-
13	532196314	SPRING *SPRING*	1	-
14	596482001	SPRING *SPRING*	2	-
15	593824001	STUD *STUD*	2	-
16	532194208	PIN *PIN*	2	-
17	587225301	PIN *PIN*	4	-
18	532194209	SPRING *SPRING*	1	-
19	510184901	BUSHING *BUSHING*	2	-
20	585701401	PIN *PIN*	2	-
21	532194209	SPRING *SPRING*	2	-
22	585682001	ROD *ROD*	2	-
23	586457401	BELLCRANK *BELLCRANK*	1	-
24	586457501	BELLCRANK *BELLCRANK*	1	-
25	532196539	BOLT *BOLT*	2	-
26	586561301	SCREW *SCREW*	2	-
27	532137729	SCREW *SCREW*	2	-
28	596135701	LOCK NUT *NUT*	2	-
30	589464902	NUT *NUT*	2	-
31	596320001	WASHER *WASHER*	2	-
32	596565301	WASHER	2	-

Ref.	Article N.	Description	Qty	Kit
		WASHER		
33	812000002	RETAINER RING *RETAINER RING*	1	-
1	548323801	SEAT *SEAT.18.LOW.PROFILE.SUSPENSION*	1	-
1	540603801	SEAT *FOR 97084740100, 97084750100*	1	-
2	598001601	SERVICE KIT *PLATE.MOUNTING.SK121.EDIP*	1	-
3	586220802	SUPPORT PLATE *PLATE.SUPPORT.DECK.LIFT*	1	-
4	586221202	PLATE *PLATE.DECK.LIFT.X431*	1	-
5	597160003	PLATE *PLATE.SEAT.SUPPORT.RZ.RVS.X668*	1	-
6	580308202	SUPPORT *SUPPORT.REAR.SEAT.PNT431*	2	-
7	873970500	NUT *NUT.LOCK.HEX.FLANGE*	4	-
9	539132140	SWITCH *SEAT.SWITCH*	1	-
9	540670401	SWITCH *FOR 97084740100, 97084750100*	1	-
11	586428601	SUPPORT LEG *SUPPORT.LEG.DECK.LIFT*	1	-
12	585989301	BUMPER *GROMMET.BUMPER*	2	-
13	539104763	CLIP *CLIP*	5	-
14	539990316	BOLT *BOLT*	4	-
15	510422701	SCREW *SCREW*	2	-
18	596240701	BOLT *BOLT*	2	-
19	874490512	BOLT *BOLT*	4	-
20	817000510	BOLT *BOLT*	6	-
21	594944401	NUT *NUT*	2	-
22	521996502	NUT *NUT.FLANGE.*	2	-

Ref.	Article N.	Description	Qty	Kit
26	597869301	BOLT *BOLT.CARRI.SQUR.3/8X.45.CLR Zn*	2	-
28	597330002	BRACKET *BRCKT.SEAT.PIVOT.SK121.RZ.X431*	1	-
34	597553401	BUMPER *BUMPER.3/8-16.INTERNAL THREAD*	2	-
1	598851703	TUBE *TUBE.RZ.LEVER.W/GRIP.RT X428*	1	-
2	598851704	TUBE *TUBE.RZ.LEVER.W/GRIP.LT X428*	1	-
3	585124705	BRACKET *BRACKET.CONTROLS.ZTR.E-DIP*	2	-
4	539131518	BEARING *BEARING, FLANGE*	2	-
5	576140301	LEVER *LEVER.CONTROL*	2	-
6	587601703	LEVER *CNTRL.LEVER.*	2	-
7	584927201	SPACER *SPACER.PIVOT.CONTROL*	2	-
8	539102720	GAS SPRING *DAMPENER*	2	-
9	547930201	BLOCK *BLOCK.TRACKING.CONTROL.REC.BLK*	2	-
12	588604902	ROD *ROD.ASM.RH.ADJUSTABLE.*	1	-
13	588605002	ROD *ROD.ASM.LH.ADJUSTABLE.*	1	-
14	537602401	CLIP *CLIP.R-CLIP*	2	-
15	587601501	SWITCH *SWITCH.INTLK.RZ.RFRSH.BUTTON*	2	-
16	596434301	BOLT *BOLT.HX.1/2-13 X 2-3/4.CLR.ZNC*	2	-
17	585986101	BOLT *SCREW.SHAKEPROOF.1.25.BLACK*	2	-
18	592858702	BOLT *BOLT.5/16-18X.75.HEX.FLANGE*	8	-
19	596580801	BOLT *BOLT.HEX.SCREW.5/16-18 X 1*	2	-
20	587885301	SCREW *SCREW.CAP.SOCKET.6PT.5/16-18*	2	-
21	525544002	BOLT	4	-

Ref.	Article N.	Description	Qty	Kit
		BOLT.HEXAGON.HEAD.5/16-18X1.25		
22	574822701	SCREW *SCR #10-24 X .75 SKT HD BLK ZN*	2	-
23	539108010	NUT *NUT 1/2-13HX JM NYL INST GR2ZN*	2	-
24	594944401	NUT *NUT.HEX.FLNG.5/16-18.NYLOC.CLR*	10	-
25	596583702	NUT *NUT.HEX.5/16-18.NYLOC.BLK_ZINC*	4	-
26	596039201	LOCK NUT *NUT.SER.FLANGE.LOCKNUT.5/16-18*	4	-
27	532423063	WASHER	1	-
1	536856401	WHEEL ASSY *WHEEL.ASM.K3012.20x10.BLACK*	2	-
2	580830801	WHEEL ASSY *WHEEL.ASSY.FRONT.CASTER.11X6-5*	2	-
2	595910102	WHEEL ASSY *FOR 97084740100, 97084750100*	1	-
3	586650310	YOKE *YOKE.CASTER.ASM.6.AM.GRY.X685*	2	-
4	596623501	VALVE *VALVE.ZERK.1/2.DRIVE IN*	2	-
5	539103300	NIPPLE *VALVE.ZERK.1/4*	2	-
6	539112660	BEARING *BEARING, FLANGED*	2	-
7	539117901	BLADE BUSHING *CASTER BUSHING*	2	-
8	595281301	CAP *CAP GREASE*	2	-
9	596301001	PLUG *PLUG.CASTER.CLEAR.ZINC*	2	-
10	585995401	SPACER *SPACER.PIVOT*	2	-
11	596388901	SPRING *SPRING.CASTER.CLEAR.ZINC*	2	-
12	596319901	SCREW *SCREW.HEX.5/16-18 X 1 GR5*	2	-
13	576601503	SCREW *BOLT.RHSNB; 1/2-13 X 7.5*	2	-
14	521991103	NUT *NUT.LOCK 1/2-13 NYLOK.BLK.Zn*	2	-
15	587653903	NUT	8	-

Ref.	Article N.	Description	Qty	Kit
		NUT.1/2-20UNF-2B.1/2-20X3/4GR8		
16	596319801	WASHER *WASHER.1.025 X 1.625 X 0.063*	2	-
1	598602606	CONSOLE ASSY *CONSOLE.ASM.RZ.RH.AMG.MS685*	1	-
2	586621203	CONSOLE ASSY *CONSOLE.RZ.REFRESH.LH.MS685*	1	-
3	531016704	FUEL TANK ASSY *FUEL.TANK.ASM.RZ.2.25 2024*	1	-
4	529979701	HARNESS *FUEL.CAP.VENTED.BLK*	1	-
5	597873201	THROTTLE *THROTTLE.CABLE.ASSY 39*	1	-
6	586881503	CHOKE CONTROL ASSY *CHOKE.CONTROL.ASM.PUSH-IN*	1	-
7	539107541	IGNITION SWITCH *IGNITION SWITCH*	1	-
8	582107602	SWITCH *SWITCH.PTO.8TERMINAL.STD.RED*	1	-
9	587601501	SWITCH *SWITCH.INTLK.RZ.RFRSH.BUTTON*	2	-
11	585522709	CONTROL PANEL *CONTROL.PANEL.RZ.REFSH.AM.GRY*	1	-
12	532163465	BATTERY *BATTERY.12VOLT.28AMP.WET*	1	-
13	593634404	BRACKET *BRACKET.PNT.BATTERY.MOUNT.EDIP*	1	-
14	582609602	BOX *BOX.PNT.BATTERY.RZ.EDIP*	1	-
15	532131563	COVER *COVER.TERMINAL.RED*	2	-
16	539102759	INSULATOR *INSULATOR-BATTERY*	1	-
17	576618101	TANK VENT *VALVE, FUEL CHECK*	1	-
18	586123906	FUEL HOSE *FUEL.HOSE.SHUT.OFF.ASM.10.18*	1	-
19	582042802	SOLENOID *SOLENOID W/BRASS.PLUNGER.Zn*	1	-
20	587198601	HARNESS *HARNESS.BTTRY.CABLE.RZ.REFRESH*	1	-
21	587044550	HOSE *HOSE.3/16.VAPOR.LINE.50LGTH*	1	-

Ref.	Article N.	Description	Qty	Kit
22	547159601	GROMMET *VITON.GROMMET.FUEL.OUTLET*	1	-
23	584648201	GROMMET *GOMMET.FUEL.CHECK.VALVE*	1	-
24	532139277	NIPPLE *ELBOW.FUEL.TANK*	1	-
25	594919101	HOUR METER *HOURMETER.SRVMINDER.RECT*	1	-
26	532411935	KEY *IGNITION.KEY*	1	-
27	586108201	HARNESS *CABLE.BATTERY.POS.RZ*	1	-
28	588839401	HOOK *HOOK.J.BATTERY*	2	-
29	545227101	SCREW *SCREW.#6.PLASTITE*	2	-
30	596789701	SCREW *SCR.HEX.1/4-20X5/8*	1	-
31	532141841	SCREW *SCREW.10-16X0.650*	2	-
32	574822701	SCREW *SCREW.SAFETY.SWITCH*	2	-
33	595316801	BOLT *BOLT.BATTERY.BOX*	2	-
34	874760412	BOLT *BOLT.HEX.HD.1/4-20UNC X 3/4*	2	-
35	596135801	BOLT *BOLT.CONSOLE.*	2	-
36	596133601	LOCK NUT *LOCKNUT.KEPS.1/4-20*	2	-
37	521996502	NUT *NUT.BATTERY.BOX*	2	-
38	595086601	NUT *NUT.HEX.1/4-20 ST ZPB*	5	-
39	532123487	HOSE CLAMP *CLAMP.HOSE.BLK*	4	-
40	587044810	HOSE *HOSE.1/4.LOW.PERM.FUEL.LN.10*	1	-
41	587044818	HOSE *HOSE.1/4.LOW.PERM.FUEL.LN.18*	1	-
42	586337301	HARNESS *HARNESS.MAIN.RZ.WITHOUT.BRAKE*	1	-

WHEELS AND TIRES

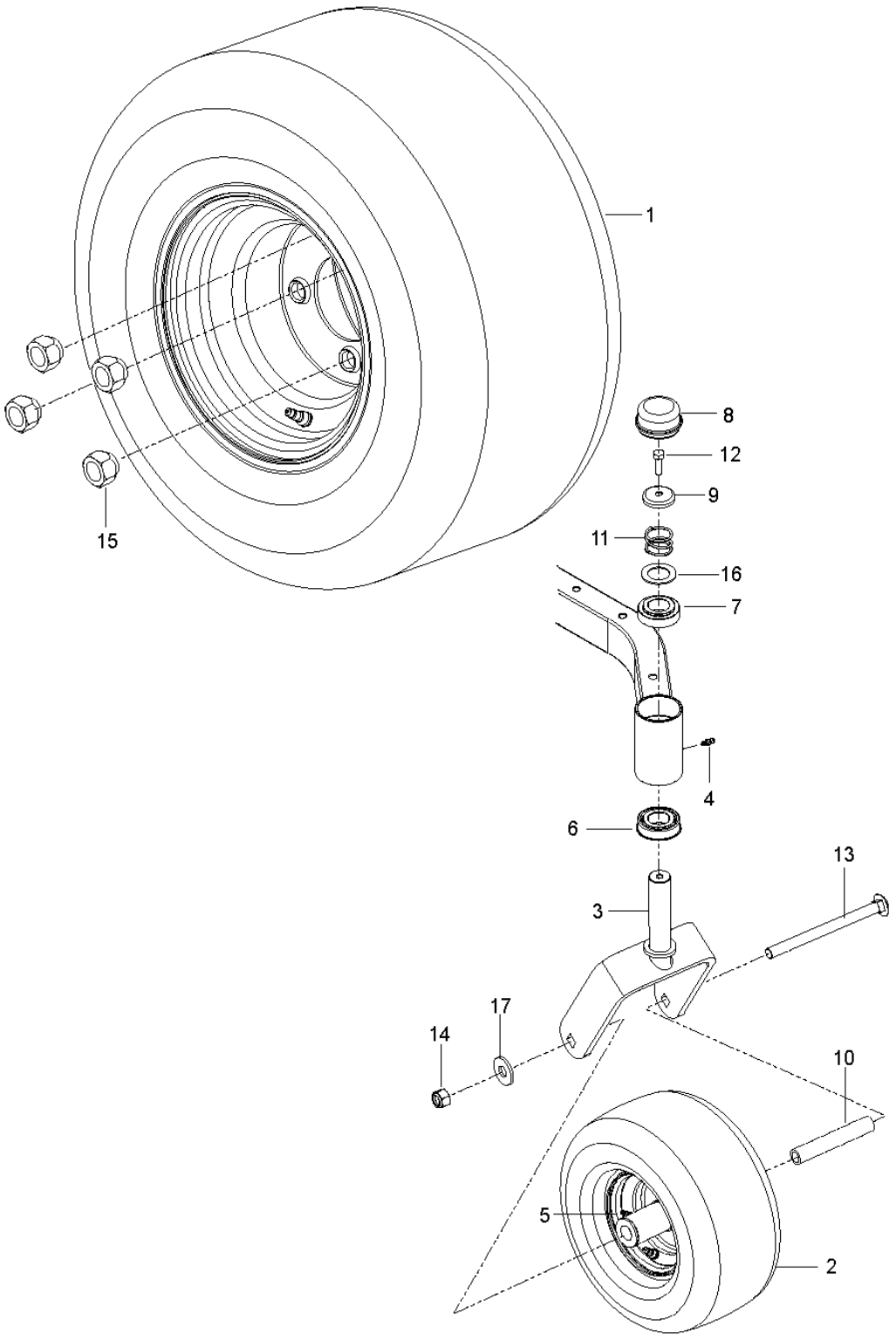

Ref.	Article N.	Description	Qty	Kit
1	536831102	DECAL *DECAL.ZTR.PKBRAKE.AMG.LH*	1	-
2	536831101	DECAL	1	-

Ref.	Article N.	Description	Qty	Kit
		DECAL.ZTR.INS.PKBRAKE.AMG.RH		
3	548309502	DECAL *DECAL.Z254FX*	2	-
4	529527001	DECAL *DECAL.ZTR.WARNING.BATTERY.SYMB*	1	-
6	539108385	DECAL *DECAL.DO NOT TOW*	1	-
7	539108386	DECAL *DECAL, EXITING MOWER*	1	-
8	539109803	DECAL *DECAL.SERVICE.RZ.*	1	-
9	537449101	DECAL *DECAL.ZTR.Z200.INST.HUS.AMG.EN*	1	-
12	590810801	DECAL *DECAL.TR/ZTR.DECKWARN.CC.BLK*	1	-
13	589357902	DECAL *DECAL.DECK.CLEARCUT.NOSTEP*	2	-
14	546540701	DECAL *DECAL.ZTR.BLTROUTING.3BLADE*	1	-
15	577469001	DECAL *DECAL.HUSQVARNA.210MM*	1	-
17	537450103	DECAL *DECAL.DECK.54:CLEARCUT.BLACK*	1	-
18	584904602	DECAL *DECAL.DECK.DEFLECTOR.WARN*	1	-
19	529405301	DECAL *DECAL.BUILTINAMERICA.HUSQ*	1	-
20	591357301	DECAL *DECAL.LOGO.SEATPLATE.RZ.ZTR.HU*	1	-
21	532428677	DECAL *BADGE.CROWN.DECAL*	1	-
1	598736102	PLATE *PLATE.ENG.23RZ.MS431*	1	-
2	581886702	BRACKET *BRACKET.PNT.MUFFLER.EDIP*	1	-
3	548529902	CLUTCH *CLUTCH.STOP.BLACK*	1	-
4	587451202	GUARD *GUARD.MUFFLER.WO.TOW.HITCH.BLK*	1	-
5	539132859	HEAT SHIELD *SHIELD, HEAT*	1	-
6	539131604	MUFFLER ASSY *MUFFLER.ASM.TWIN*	1	-

Ref.	Article N.	Description	Qty	Kit
7	595901501	BOLT *BOLT.CUP.SQ.NCK.5/16-18 X 1.02*	2	-
8	595901601	BOLT *BOLT.CUP.5/16-18 X 3/4.CLR.ZNC*	1	-
9	596135901	BOLT *BOLT.HEX.5/16-18 X 3/4.CLR.ZNC*	4	-
10	594944401	NUT *NUT.HEX.FLNG.5/16-18.NYLOC.CLR*	5	-
11	532448145	ARM *ARM.IDLER*	1	-
12	501603701	BEARING *BEARING.FLANGED.PLASTIC.3/4ID*	2	-
13	582538902	SPINDLE *SPINDLE.IDLER.CLR.ZINC*	1	-
14	582539502	BOLT *BOLT.1/2-13X2.75 GRD5*	1	-
15	521991102	NUT *1/2-13.HEX.FLANGE.NYLOK*	1	-
16	532193197	PULLEY *PULLEY.PNT.IDLER 48PRIMARY*	1	-
17	532193197	PULLEY *PULLEY.IDLER.48PRIMARY*	1	-
18	596433901	SCREW *SCREW.HEX.3/8-16 X 3.54.CLR*	1	-
19	596134901	WASHER *WASHER.PLAIN.3/8 X 7/8*	2	-
20	596240901	NUT *NUT.PREVAIL.3/8-16 X .564*	2	-
21	532196105	SPRING *SPRING.DRIVE.DECK.2006*	1	-
22	587537401	PULLEY *PULLEY.ENGINE*	1	-
23	548504501	SPACER *SPACER.SPACER.1.125.W/OGURA*	1	-
24	592821701	CLUTCH *CLUTCH.OGURA.GT1,5-EH17(D)*	1	-
25	532126197	WASHER *WASHER.1-1/2 ODX15/32 IDX.250*	1	-
26	581332804	BOLT *BOLT.CLUTCH.7/16-20X3.5.GRADE5*	1	-
27	596564402	BOLT *BOLT.HEX.HEAD.3/8-16 X 1-1/4*	4	-
28	596238701	WASHER	4	-

Ref.	Article N.	Description	Qty	Kit
		WASHER.SPRING.LOCK.381IDX.680		
29	583955601	TUBE *TUBE EXHAUST LEFT KAWA TWIN*	1	-
30	583955701	TUBE *TUBE EXHAUST RIGHT KAWA TWIN*	1	-
31	532178151	GASKET *GASKET.EXHAUST.KAWASAKI*	2	-
32	532184362	NUT *NUT.HEX.FLANGE.TOPLOCK.M8-1.25*	4	-
33	532131563	COVER *COVER.TERMINAL.RED*	1	-
34	596031501	LOCK NUT *LOCK.NUT.188 X.218.CLEAR.ZINC*	1	-
35	532148456	TUBE *TUBE.EASY_OIL_DRAIN*	1	-
1	585039803	GUARD *GUARD.ENG.HUSQ.RZ.AM.GRY.X685*	1	-
2	589283302	FRAME TUBE *FRAME.TUBE.RZ.MAIN.WELD.LH.ORG*	1	-
3	589283402	FRAME TUBE *FRAME.TUBE.RZ.MAIN.WELD.RH.ORG*	1	-
4	584991002	TUBE *TUBE.FRAME.RR.HUSQ.23.RZ.ORG*	1	-
5	598712402	PLATE KIT *PLATE.RZ.FOOTREST.AM.GREY.X685*	1	-
6	586703802	FRONT COVER *FRONT.COVER.RZ.FOOTREST.RF.685*	1	-
7	529365102	SUPPORT *SUPPORT.RZ.FOOTREST.PLATE.X431*	1	-
8	587546902	SCREW *SCREW.ASM.5/16-18.ADJ.ISO.TAP*	1	-
9	585916701	LIGHT *LIGHT.ZTR.LED.ASM*	1	-
10	587225201	GROMMET *GROMMET.RUBBER.PUSHIN*	2	-
11	585989301	BUMPER *GROMMET.BUMPER*	7	-
12	585523104	CROSS MEMBER *CROSS.PNT.MEMBER.BLK*	1	-
13	587458602	BRACKET *BRACKET.SKIDPLTE.LED.RFRSHX417*	1	-
14	585331502	COVER *COVER.RAIL.LH.RZ.x668*	1	-

Ref.	Article N.	Description	Qty	Kit
15	585331602	COVER *COVER.RAIL.RH.RZ.x668*	1	-
16	597783101	KNOB *KNOB.3WING.5/16-18.CLR.ZN*	1	-
17	585474302	BRACKET *ROD.BYPASS.EZT.X431*	2	-
18	593682604	SUPPORT *SUPPORT.RZ.LH.CONSOLE.BLK*	1	-
19	580501302	BRACKET *FENDER.SUPPORT.PNT.X431*	2	-
20	593118304	SUPPORT *SUPPORT.RZ.CONSOLE.RH.MS431*	1	-
21	586654302	BOLT *BOLT.SHOULDER.3/8-16X3.GR5 CLR*	2	-
22	586881101	BOLT *BOLT.5/16-18.THRD.ROLL.SHOULDR*	2	-
23	817000510	BOLT *BOLT.5/16-18HEX.WHS.HD.LCKSERR*	7	-
24	595316601	BOLT *BOLT.HHD FLNG 5/16-18X2.75 GR5*	3	-
25	596564405	BOLT *BOLT.HEX.HEAD.3/8-16 X 3*	8	-
26	574233802	SCREW *HHFS.5/16 X 2.25 GD5.CLR.ZINC*	8	-
27	577117702	BOLT *HHFS.3/8-16 X 3.GR5.CLEAR.ZINC*	4	-
28	596321701	SCREW *SCREW.#10 X 0.750.BOS.THREAD*	6	-
29	817580520	BOLT *SCREW.THDROL.5/16-18X1.25 TYTT*	2	-
30	596434001	SCREW *SCREW.#10X0.500.BOS.THREAD*	2	-
31	521996502	NUT *NUT.HEX.LOCK.W/FLANGE.3/8-16*	14	-
32	594944401	NUT *NUT.HEX.FLNG.5/16-18.NYLOC.CLR*	16	-
34	595901901	NUT *NUT.7/16-14.GR5.CLR.ZINC*	2	-
36	532423063	WASHER *PALNUT.5/16*	1	-
39	593842101	BUSHING *BUSHING*	2	-
40	521938102	LINK	1	-

Ref.	Article N.	Description	Qty	Kit
		LINK.FRINT.SUSP.CLEAR.ZINC		
41	595901901	NUT *NUT.7/16-14.GR5.CLR.ZINC*	2	-
42	586548101	HARNESS *HARNESS.LED.LIGHT.RZ*	1	-
1	548325202	TRANSMISSION *TRANSMISSION.EZT.SHORT.20.RT*	1	-
2	548325201	TRANSMISSION *TRANSMISSION.EZT.SHORT.20.LT*	1	-
3	580806602	BRACKET *BRACKET.EZT.MOUNT.REAR.PNTX431*	2	-
4	595316601	BOLT *BOLT.HHD FLNG 5/16-18X2.75 GR5*	4	-
5	594944401	NUT *NUT.HEX.FLNG.5/16-18.NYLOC.CLR*	6	-
6	593852803	SPACER *SPACER.TUBE.EZT.6.810*	2	-
7	596581901	BOLT *BOLT.HEXAGON.3/8-16 X 2-1/2*	4	-
8	596565301	WASHER *WASHER;3/8X0.08IN.ST.CLR.ZINC*	4	-
9	596238701	WASHER *WASHER.SPRING.LOCK.381IDX.680*	4	-
10	580806502	SUPPORT *SUPPORT.FRONT.TRANS.PNTX431*	2	-
11	574233802	SCREW *HHFS.5/16 X 2.25 GD5.CLR.ZINC*	2	-
12	596930401	LINKAGE *LINKAGE.BRAKE.LT.CLR.ZINC*	1	-
13	596930701	LINKAGE *LINKAGE.BRAKE.RH.CLR.ZINC*	1	-
14	587115301	PIN *PIN.CLEVIS.3/16X.475*	1	-
15	587225301	PIN *PIN COTTER;LOCKING;BOWTIE;1IN*	1	-
16	596299801	SPRING *SPRING.BRAKE.ROD.CLEAR.ZINC*	2	-
17	595086601	NUT *NUT.HEX.1/4-20 ST ZPB*	2	-
18	596582301	WASHER *WASHER 0.28 X 0.63 CLR.ZN*	4	-
19	585474402	ROD *ROD.BYPASS.LH.EZT.CLEAR.ZINC*	1	-

Ref.	Article N.	Description	Qty	Kit
20	585474502	ROD *ROD.BYPASS.RH.EZT.CLEAR.ZINC*	1	-
21	596580601	PIN *PIN.RETAINING.1-7/16 X 0.073*	4	-
22	586665101	SPRING *SPRING.ROD.BYPASS.EZT*	2	-
23	587653903	NUT *NUT.1/2-20UNF-2B.1/2-20X3/4GR8*	8	-
24	539110411	DRIVE BELT *Drive BELT, EZT'S*	1	-
1	596327001	SERVICE KIT *DECK.54CC.WELDMT.RZ*	1	-
2	592951801	DRIVE BELT	1	-
3	582760502	BLADE *BLADE.54CC.HI-LIFT.PZ.165.431*	3	-
4	590304407	COVER *COVER.PNT.54CC.MDRL.LH.ZTR.GRY*	1	-
5	590304207	COVER *COVER.PNT.54CC.MANDREL.RH.GREY*	1	-
6	534214702	HOUSING ASSY *HOUSING.ASM.NO-GREASE.CASTIRON*	3	-
7	589527301	WHEEL *WHEEL.GAUGE.WIDE(RALLY)*	4	-
8	574169601	ROLLER *ROLLER, GAUGE .635 BORE*	2	-
9	532175708	PULLEY ASSY *PULLEY.MANDREL.CRD 107CM.DOM.*	3	-
10	532197379	PULLEY *PULLEY.IDLER.4,5.X431*	2	-
11	532197380	PULLEY *PULLEY.IDLER.4,5.SPACER.X431*	1	-
12	590632204	DEFLECTOR ASSY *DEFLECTOR.ASM.54CC.RES.BLACK*	1	-
13	595297001	ROD *ROD.HINGE*	1	-
14	585323901	BEARING *BEARING.MANDREL.TOP.EXTENDED*	3	-
15	582219602	ARM *ARM.PNT.IDLER.CLEARCUT.54.EDIP*	1	-
16	536050602	LINK *ARM.FIXED.MOWER.SUSP.X431*	2	-
17	532415598	HOSE COUPLING *PORT.WASHOUT*	1	-

Ref.	Article N.	Description	Qty	Kit
18	532416405	COUPLING *COUPLING.QUICK-CONNECT*	1	-
19	596482001	SPRING *SPRING.CLEAR.ZINC*	2	-
20	587354701	SPRING *SPRING.DEFLECTOR*	1	-
21	532197251	SPRING *USE FOR SERIAL # STARTING 02012025*000000 & AFTER*	1	-
21	587358401	SPRING *SPRING.EXTN.42FCS.TR.DECK.DRV*	1	-
22	574196502	TUBE *TUBE.ROLLER.AXLE.LONG.CLR.ZINC*	1	-
23	587256501	SHAFT *SHAFT ASM.MNDRL.N/GREASEABLE*	3	-
24	589813301	PLUG *PLUG.TREE..203HOLE.BLK*	3	-
25	590732501	BUMPER ASSY *BUMPER.ASM.54CC.TRIMSIDE.HUSQ*	1	-
26	532194209	SPRING *PIN.COTTER.7/16.BOW TIE LOCK*	2	-
27	593824001	STUD *STUD.W/DANTI-ROTATION*	2	-
28	532170165	BOLT *BOLT.SHOULDER.5/16-18 TT*	2	-
29	596434404	BOLT *BOLT.SHOULDER.3/8-16X3-5/8*	4	-
30	584309301	SCREW *SCREW.SEMS.7/16-20X1.HEX.HEAD*	3	-
31	596240801	BOLT *BOLT.EYELET.5/16-18 X 3-1/2*	1	-
32	584953901	BOLT *BOLT.HEX.WSHRHD.313-18X1.19*	12	-
33	596136301	BOLT *BOLT.CUP.HEAD.3/8-16 X 2*	1	-
34	594944501	BOLT *BLT.CUP.HD.SQR.1/2-13X8.0 G5*	1	-
35	532196539	BOLT *BOLT.SHOULDER*	2	-
36	532137729	SCREW *SCREW.THD.ROLL.1/4-20 X 5/8*	9	-
37	599972501	BOLT *BOLT.HEX.GR8.CLR.Zn*	1	-
38	588438301	SCREW	1	-

Ref.	Article N.	Description	Qty	Kit
		SCREW.7/16-14 X 2.125.WASHER		
39	596134801	HEXAGON NUT *NUT.HEX.9/16-18 X 1.010*	3	-
40	873900600	NUT *NUT.LOCK.FLG.3/8-16UNC*	5	-
41	521991102	NUT *1/2-13.HEX.FLANGE.NYLOK*	1	-
42	596039201	LOCK NUT *NUT.SER.FLANGE.LOCKNUT.5/16-18*	2	-
43	596135701	LOCK NUT *NUT.LOCK.PRVL.TORQ.5/16-18X.68*	2	-
44	532110452	NUT *NUT.PUSH.PIN.HINGE.PHOS.&.OIL*	1	-
45	532178515	WASHER *WASHER.FLAT.HARDENED*	1	-
47	819191912	WASHER *WASHER.1-5/32 X 19/32 X 12GA*	2	-
48	598752001	MANDREL *MANDREL.CAST.IRON*	3	-
49	521938102	LINK *LINK.FRINT.SUSP.CLEAR.ZINC*	1	-
1	586429702	SHAFT ASSY *SHAFT ASSY*	1	-
2	586457101	LINK *LINK*	1	-
3	586457201	LINK *LINK*	1	-
4	587622901	LIFTING LEVER ASSY *LIFTING LEVER ASSY*	1	-
5	580486102	SPACER *SPACER*	2	-
6	585682102	BRACKET *BRACKET*	2	-
7	587623001	LINK ASSY *LINK ASSY*	2	-
7	596766601	LINK ARM ASSY *LINK*	2	-
8	525847202	LINK *LINK ASSY*	2	-
9	587140502	ARM *ARM*	2	-
10	587623001	LINK ASSY *LINK ASSY*	2	-

Ref.	Article N.	Description	Qty	Kit
11	532411555	GRIP *GRIP*	2	-
12	586867601	SPRING *SPRING*	4	-
13	532196314	SPRING *SPRING*	1	-
14	596482001	SPRING *SPRING*	2	-
15	593824001	STUD *STUD*	2	-
16	532194208	PIN *PIN*	2	-
17	587225301	PIN *PIN*	4	-
18	532194209	SPRING *SPRING*	1	-
19	510184901	BUSHING *BUSHING*	2	-
20	585701401	PIN *PIN*	2	-
21	532194209	SPRING *SPRING*	2	-
22	585682001	ROD *ROD*	2	-
23	586457401	BELLCRANK *BELLCRANK*	1	-
24	586457501	BELLCRANK *BELLCRANK*	1	-
25	532196539	BOLT *BOLT*	2	-
26	586561301	SCREW *SCREW*	2	-
27	532137729	SCREW *SCREW*	2	-
28	596135701	LOCK NUT *NUT*	2	-
30	589464902	NUT *NUT*	2	-
31	596320001	WASHER *WASHER*	2	-
32	596565301	WASHER *WASHER*	2	-
33	812000002	RETAINER RING	1	-

Ref.	Article N.	Description	Qty	Kit
		RETAINER RING		
1	548323801	SEAT *SEAT.18.LOW.PROFILE.SUSPENSION*	1	-
1	540603801	SEAT *FOR 97084740100, 97084750100*	1	-
2	598001601	SERVICE KIT *PLATE.MOUNTING.SK121.EDIP*	1	-
3	586220802	SUPPORT PLATE *PLATE.SUPPORT.DECK.LIFT*	1	-
4	586221202	PLATE *PLATE.DECK.LIFT.X431*	1	-
5	597160003	PLATE *PLATE.SEAT.SUPPORT.RZ.RVS.X668*	1	-
6	580308202	SUPPORT *SUPPORT.REAR.SEAT.PNT431*	2	-
7	873970500	NUT *NUT.LOCK.HEX.FLANGE*	4	-
9	539132140	SWITCH *SEAT.SWITCH*	1	-
9	540670401	SWITCH *FOR 97084740100, 97084750100*	1	-
11	586428601	SUPPORT LEG *SUPPORT.LEG.DECK.LIFT*	1	-
12	585989301	BUMPER *GROMMET.BUMPER*	2	-
13	539104763	CLIP *CLIP*	5	-
14	539990316	BOLT *BOLT*	4	-
15	510422701	SCREW *SCREW*	2	-
18	596240701	BOLT *BOLT*	2	-
19	874490512	BOLT *BOLT*	4	-
20	817000510	BOLT *BOLT*	6	-
21	594944401	NUT *NUT*	2	-
22	521996502	NUT *NUT.FLANGE.*	2	-
26	597869301	BOLT *BOLT.CARRI.SQUR.3/8X.45.CLR Zn*	2	-

Ref.	Article N.	Description	Qty	Kit
28	597330002	BRACKET *BRCKT.SEAT.PIVOT.SK121.RZ.X431*	1	-
34	597553401	BUMPER *BUMPER.3/8-16.INTERNAL THREAD*	2	-
1	598851703	TUBE *TUBE.RZ.LEVER.W/GRIP.RT X428*	1	-
2	598851704	TUBE *TUBE.RZ.LEVER.W/GRIP.LT X428*	1	-
3	585124705	BRACKET *BRACKET.CONTROLS.ZTR.E-DIP*	2	-
4	539131518	BEARING *BEARING, FLANGE*	2	-
5	576140301	LEVER *LEVER.CONTROL*	2	-
6	587601703	LEVER *CNTRL.LEVER.*	2	-
7	584927201	SPACER *SPACER.PIVOT.CONTROL*	2	-
8	539102720	GAS SPRING *DAMPENER*	2	-
9	547930201	BLOCK *BLOCK.TRACKING.CONTROL.REC.BLK*	2	-
12	588604902	ROD *ROD.ASM.RH.ADJUSTABLE.*	1	-
13	588605002	ROD *ROD.ASM.LH.ADJUSTABLE.*	1	-
14	537602401	CLIP *CLIP.R-CLIP*	2	-
15	587601501	SWITCH *SWITCH.INTLK.RZ.RFRSH.BUTTON*	2	-
16	596434301	BOLT *BOLT.HX.1/2-13 X 2-3/4.CLR.ZNC*	2	-
17	585986101	BOLT *SCREW.SHAKEPROOF.1.25.BLACK*	2	-
18	592858702	BOLT *BOLT.5/16-18X.75.HEX.FLANGE*	8	-
19	596580801	BOLT *BOLT.HEX.SCREW.5/16-18 X 1*	2	-
20	587885301	SCREW *SCREW.CAP.SOCKET.6PT.5/16-18*	2	-
21	525544002	BOLT *BOLT.HEXAGON.HEAD.5/16-18X1.25*	4	-
22	574822701	SCREW	2	-

Ref.	Article N.	Description	Qty	Kit
		SCR #10-24 X .75 SKT HD BLK ZN		
23	539108010	NUT *NUT 1/2-13HX JM NYL INST GR2ZN*	2	-
24	594944401	NUT *NUT.HEX.FLNG.5/16-18.NYLOC.CLR*	10	-
25	596583702	NUT *NUT.HEX.5/16-18.NYLOC.BLK_ZINC*	4	-
26	596039201	LOCK NUT *NUT.SER.FLANGE.LOCKNUT.5/16-18*	4	-
27	532423063	WASHER	1	-
1	536856401	WHEEL ASSY *WHEEL.ASM.K3012.20x10.BLACK*	2	-
2	580830801	WHEEL ASSY *WHEEL.ASSY.FRONT.CASTER.11X6-5*	2	-
2	595910102	WHEEL ASSY *FOR 97084740100, 97084750100*	1	-
3	586650310	YOKE *YOKE.CASTER.ASM.6.AM.GRY.X685*	2	-
4	596623501	VALVE *VALVE.ZERK.1/2.DRIVE IN*	2	-
5	539103300	NIPPLE *VALVE.ZERK.1/4*	2	-
6	539112660	BEARING *BEARING, FLANGED*	2	-
7	539117901	BLADE BUSHING *CASTER BUSHING*	2	-
8	595281301	CAP *CAP GREASE*	2	-
9	596301001	PLUG *PLUG.CASTER.CLEAR.ZINC*	2	-
10	585995401	SPACER *SPACER.PIVOT*	2	-
11	596388901	SPRING *SPRING.CASTER.CLEAR.ZINC*	2	-
12	596319901	SCREW *SCREW.HEX.5/16-18 X 1 GR5*	2	-
13	576601503	SCREW *BOLT.RHSNB; 1/2-13 X 7.5*	2	-
14	521991103	NUT *NUT.LOCK 1/2-13 NYLOK.BLK.Zn*	2	-
15	587653903	NUT *NUT.1/2-20UNF-2B.1/2-20X3/4GR8*	8	-
16	596319801	WASHER	2	-

Ref.	Article N.	Description	Qty	Kit
		WASHER.1.025 X 1.625 X 0.063		
1	598602606	CONSOLE ASSY *CONSOLE.ASM.RZ.RH.AMG.MS685*	1	-
2	586621203	CONSOLE ASSY *CONSOLE.RZ.REFRESH.LH.MS685*	1	-
3	531016704	FUEL TANK ASSY *FUEL.TANK.ASM.RZ.2.25 2024*	1	-
4	529979701	HARNESS *FUEL.CAP.VENTED.BLK*	1	-
5	597873201	THROTTLE *THROTTLE.CABLE.ASSY 39*	1	-
6	586881503	CHOKE CONTROL ASSY *CHOKE.CONTROL.ASM.PUSH-IN*	1	-
7	539107541	IGNITION SWITCH *IGNITION SWITCH*	1	-
8	582107602	SWITCH *SWITCH.PTO.8TERMINAL.STD.RED*	1	-
9	587601501	SWITCH *SWITCH.INTLK.RZ.RFRSH.BUTTON*	2	-
11	585522709	CONTROL PANEL *CONTROL.PANEL.RZ.REFSH.AM.GRY*	1	-
12	532163465	BATTERY *BATTERY.12VOLT.28AMP.WET*	1	-
13	593634404	BRACKET *BRACKET.PNT.BATTERY.MOUNT.EDIP*	1	-
14	582609602	BOX *BOX.PNT.BATTERY.RZ.EDIP*	1	-
15	532131563	COVER *COVER.TERMINAL.RED*	2	-
16	539102759	INSULATOR *INSULATOR-BATTERY*	1	-
17	576618101	TANK VENT *VALVE, FUEL CHECK*	1	-
18	586123906	FUEL HOSE *FUEL.HOSE.SHUT.OFF.ASM.10.18*	1	-
19	582042802	SOLENOID *SOLENOID W/BRASS.PLUNGER.Zn*	1	-
20	587198601	HARNESS *HARNESS.BTTRY.CABLE.RZ.REFRESH*	1	-
21	587044550	HOSE *HOSE.3/16.VAPOR.LINE.50LGTH*	1	-
22	547159601	GROMMET *VITON.GROMMET.FUEL.OUTLET*	1	-

Ref.	Article N.	Description	Qty	Kit
23	584648201	GROMMET *GOMMET.FUEL.CHECK.VALVE*	1	-
24	532139277	NIPPLE *ELBOW.FUEL.TANK*	1	-
25	594919101	HOUR METER *HOURMETER.SRVMINDER.RECT*	1	-
26	532411935	KEY *IGNITION.KEY*	1	-
27	586108201	HARNESS *CABLE.BATTERY.POS.RZ*	1	-
28	588839401	HOOK *HOOK.J.BATTERY*	2	-
29	545227101	SCREW *SCREW.#6.PLASTITE*	2	-
30	596789701	SCREW *SCR.HEX.1/4-20X5/8*	1	-
31	532141841	SCREW *SCREW.10-16X0.650*	2	-
32	574822701	SCREW *SCREW.SAFETY.SWITCH*	2	-
33	595316801	BOLT *BOLT.BATTERY.BOX*	2	-
34	874760412	BOLT *BOLT.HEX.HD.1/4-20UNC X 3/4*	2	-
35	596135801	BOLT *BOLT.CONSOLE.*	2	-
36	596133601	LOCK NUT *LOCKNUT.KEPS.1/4-20*	2	-
37	521996502	NUT *NUT.BATTERY.BOX*	2	-
38	595086601	NUT *NUT.HEX.1/4-20 ST ZPB*	5	-
39	532123487	HOSE CLAMP *CLAMP.HOSE.BLK*	4	-
40	587044810	HOSE *HOSE.1/4.LOW.PERM.FUEL.LN.10*	1	-
41	587044818	HOSE *HOSE.1/4.LOW.PERM.FUEL.LN.18*	1	-
42	586337301	HARNESS *HARNESS.MAIN.RZ.WITHOUT.BRAKE*	1	-

IGNITION SYSTEM

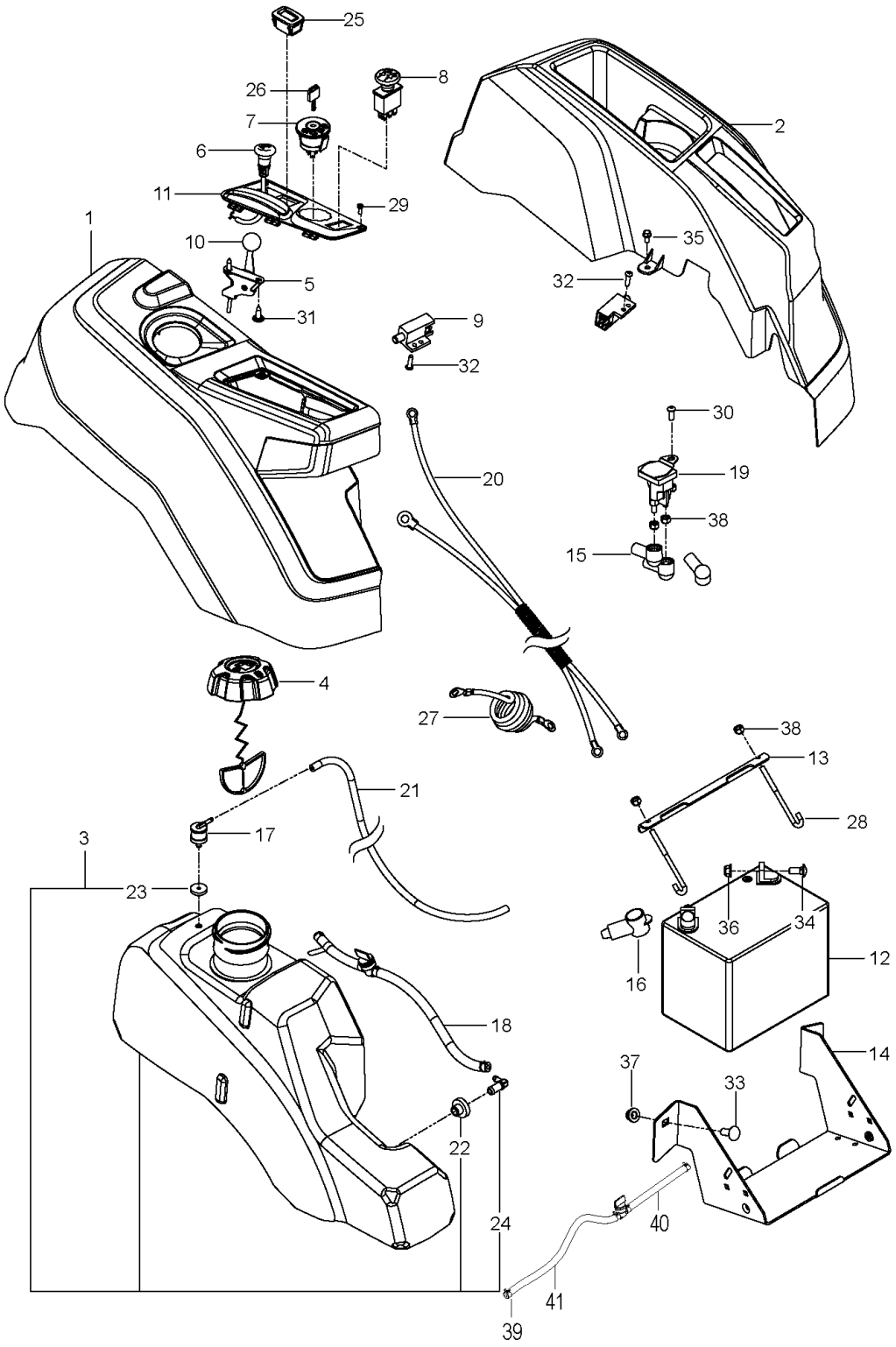

Ref.	Article N.	Description	Qty	Kit
1	536831102	DECAL *DECAL.ZTR.PKBRAKE.AMG.LH*	1	-
2	536831101	DECAL *DECAL.ZTR.INS.PKBRAKE.AMG.RH*	1	-
3	548309502	DECAL *DECAL.Z254FX*	2	-

Ref.	Article N.	Description	Qty	Kit
4	529527001	DECAL *DECAL.ZTR.WARNING.BATTERY.SYMB*	1	-
6	539108385	DECAL *DECAL.DO NOT TOW*	1	-
7	539108386	DECAL *DECAL, EXITING MOWER*	1	-
8	539109803	DECAL *DECAL.SERVICE.RZ.*	1	-
9	537449101	DECAL *DECAL.ZTR.Z200.INST.HUS.AMG.EN*	1	-
12	590810801	DECAL *DECAL.TR/ZTR.DECKWARN.CC.BLK*	1	-
13	589357902	DECAL *DECAL.DECK.CLEARCUT.NOSTEP*	2	-
14	546540701	DECAL *DECAL.ZTR.BLTROUTING.3BLADE*	1	-
15	577469001	DECAL *DECAL.HUSQVARNA.210MM*	1	-
17	537450103	DECAL *DECAL.DECK.54:CLEARCUT.BLACK*	1	-
18	584904602	DECAL *DECAL.DECK.DEFLECTOR.WARN*	1	-
19	529405301	DECAL *DECAL.BUILTINAMERICA.HUSQ*	1	-
20	591357301	DECAL *DECAL.LOGO.SEATPLATE.RZ.ZTR.HU*	1	-
21	532428677	DECAL *BADGE.CROWN.DECAL*	1	-
1	598736102	PLATE *PLATE.ENG.23RZ.MS431*	1	-
2	581886702	BRACKET *BRACKET.PNT.MUFFLER.EDIP*	1	-
3	548529902	CLUTCH *CLUTCH.STOP.BLACK*	1	-
4	587451202	GUARD *GUARD.MUFFLER.WO.TOW.HITCH.BLK*	1	-
5	539132859	HEAT SHIELD *SHIELD, HEAT*	1	-
6	539131604	MUFFLER ASSY *MUFFLER.ASM.TWIN*	1	-
7	595901501	BOLT *BOLT.CUP.SQ.NCK.5/16-18 X 1.02*	2	-
8	595901601	BOLT	1	-

Ref.	Article N.	Description	Qty	Kit
		BOLT.CUP.5/16-18 X 3/4.CLR.ZNC		
9	596135901	BOLT *BOLT.HEX.5/16-18 X 3/4.CLR.ZNC*	4	-
10	594944401	NUT *NUT.HEX.FLNG.5/16-18.NYLOC.CLR*	5	-
11	532448145	ARM *ARM.IDLER*	1	-
12	501603701	BEARING *BEARING.FLANGED.PLASTIC.3/4ID*	2	-
13	582538902	SPINDLE *SPINDLE.IDLER.CLR.ZINC*	1	-
14	582539502	BOLT *BOLT.1/2-13X2.75 GRD5*	1	-
15	521991102	NUT *1/2-13.HEX.FLANGE.NYLOK*	1	-
16	532193197	PULLEY *PULLEY.PNT.IDLER 48PRIMARY*	1	-
17	532193197	PULLEY *PULLEY.IDLER.48PRIMARY*	1	-
18	596433901	SCREW *SCREW.HEX.3/8-16 X 3.54.CLR*	1	-
19	596134901	WASHER *WASHER.PLAIN.3/8 X 7/8*	2	-
20	596240901	NUT *NUT.PREVAIL.3/8-16 X .564*	2	-
21	532196105	SPRING *SPRING.DRIVE.DECK.2006*	1	-
22	587537401	PULLEY *PULLEY.ENGINE*	1	-
23	548504501	SPACER *SPACER.SPACER.1.125.W/OGURA*	1	-
24	592821701	CLUTCH *CLUTCH.OGURA.GT1,5-EH17(D)*	1	-
25	532126197	WASHER *WASHER.1-1/2 ODX15/32 IDX.250*	1	-
26	581332804	BOLT *BOLT.CLUTCH.7/16-20X3.5.GRADE5*	1	-
27	596564402	BOLT *BOLT.HEX.HEAD.3/8-16 X 1-1/4*	4	-
28	596238701	WASHER *WASHER.SPRING.LOCK.381IDX.680*	4	-
29	583955601	TUBE *TUBE EXHAUST LEFT KAWA TWIN*	1	-

Ref.	Article N.	Description	Qty	Kit
30	583955701	TUBE *TUBE EXHAUST RIGHT KAWA TWIN*	1	-
31	532178151	GASKET *GASKET.EXHAUST.KAWASAKI*	2	-
32	532184362	NUT *NUT.HEX.FLANGE.TOPLOCK.M8-1.25*	4	-
33	532131563	COVER *COVER.TERMINAL.RED*	1	-
34	596031501	LOCK NUT *LOCK.NUT.188 X.218.CLEAR.ZINC*	1	-
35	532148456	TUBE *TUBE.EASY_OIL_DRAIN*	1	-
1	585039803	GUARD *GUARD.ENG.HUSQ.RZ.AM.GRY.X685*	1	-
2	589283302	FRAME TUBE *FRAME.TUBE.RZ.MAIN.WELD.LH.ORG*	1	-
3	589283402	FRAME TUBE *FRAME.TUBE.RZ.MAIN.WELD.RH.ORG*	1	-
4	584991002	TUBE *TUBE.FRAME.RR.HUSQ.23.RZ.ORG*	1	-
5	598712402	PLATE KIT *PLATE.RZ.FOOTREST.AM.GREY.X685*	1	-
6	586703802	FRONT COVER *FRONT.COVER.RZ.FOOTREST.RF.685*	1	-
7	529365102	SUPPORT *SUPPORT.RZ.FOOTREST.PLATE.X431*	1	-
8	587546902	SCREW *SCREW.ASM.5/16-18.ADJ.ISO.TAP*	1	-
9	585916701	LIGHT *LIGHT.ZTR.LED.ASM*	1	-
10	587225201	GROMMET *GROMMET.RUBBER.PUSHIN*	2	-
11	585989301	BUMPER *GROMMET.BUMPER*	7	-
12	585523104	CROSS MEMBER *CROSS.PNT.MEMBER.BLK*	1	-
13	587458602	BRACKET *BRACKET.SKIDPLTE.LED.RFRSHX417*	1	-
14	585331502	COVER *COVER.RAIL.LH.RZ.x668*	1	-
15	585331602	COVER *COVER.RAIL.RH.RZ.x668*	1	-
16	597783101	KNOB	1	-

Ref.	Article N.	Description	Qty	Kit
		KNOB.3WING.5/16-18.CLR.ZN		
17	585474302	BRACKET *ROD.BYPASS.EZT.X431*	2	-
18	593682604	SUPPORT *SUPPORT.RZ.LH.CONSOLE.BLK*	1	-
19	580501302	BRACKET *FENDER.SUPPORT.PNT.X431*	2	-
20	593118304	SUPPORT *SUPPORT.RZ.CONSOLE.RH.MS431*	1	-
21	586654302	BOLT *BOLT.SHOULDER.3/8-16X3.GR5 CLR*	2	-
22	586881101	BOLT *BOLT.5/16-18.THRD.ROLL.SHOULDR*	2	-
23	817000510	BOLT *BOLT.5/16-18HEX.WHS.HD.LCKSERR*	7	-
24	595316601	BOLT *BOLT.HHD FLNG 5/16-18X2.75 GR5*	3	-
25	596564405	BOLT *BOLT.HEX.HEAD.3/8-16 X 3*	8	-
26	574233802	SCREW *HHFS.5/16 X 2.25 GD5.CLR.ZINC*	8	-
27	577117702	BOLT *HHFS.3/8-16 X 3.GR5.CLEAR.ZINC*	4	-
28	596321701	SCREW *SCREW.#10 X 0.750.BOS.THREAD*	6	-
29	817580520	BOLT *SCREW.THDROL.5/16-18X1.25 TYTT*	2	-
30	596434001	SCREW *SCREW.#10X0.500.BOS.THREAD*	2	-
31	521996502	NUT *NUT.HEX.LOCK.W/FLANGE.3/8-16*	14	-
32	594944401	NUT *NUT.HEX.FLNG.5/16-18.NYLOC.CLR*	16	-
34	595901901	NUT *NUT.7/16-14.GR5.CLR.ZINC*	2	-
36	532423063	WASHER *PALNUT.5/16*	1	-
39	593842101	BUSHING *BUSHING*	2	-
40	521938102	LINK *LINK.FRINT.SUSP.CLEAR.ZINC*	1	-
41	595901901	NUT *NUT.7/16-14.GR5.CLR.ZINC*	2	-

Ref.	Article N.	Description	Qty	Kit
42	586548101	HARNESS *HARNESS.LED.LIGHT.RZ*	1	-
1	548325202	TRANSMISSION *TRANSMISSION.EZT.SHORT.20.RT*	1	-
2	548325201	TRANSMISSION *TRANSMISSION.EZT.SHORT.20.LT*	1	-
3	580806602	BRACKET *BRACKET.EZT.MOUNT.REAR.PNTX431*	2	-
4	595316601	BOLT *BOLT.HHD FLNG 5/16-18X2.75 GR5*	4	-
5	594944401	NUT *NUT.HEX.FLNG.5/16-18.NYLOC.CLR*	6	-
6	593852803	SPACER *SPACER.TUBE.EZT.6.810*	2	-
7	596581901	BOLT *BOLT.HEXAGON.3/8-16 X 2-1/2*	4	-
8	596565301	WASHER *WASHER;3/8X0.08IN.ST.CLR.ZINC*	4	-
9	596238701	WASHER *WASHER.SPRING.LOCK.381IDX.680*	4	-
10	580806502	SUPPORT *SUPPORT.FRONT.TRANS.PNTX431*	2	-
11	574233802	SCREW *HHFS.5/16 X 2.25 GD5.CLR.ZINC*	2	-
12	596930401	LINKAGE *LINKAGE.BRAKE.LT.CLR.ZINC*	1	-
13	596930701	LINKAGE *LINKAGE.BRAKE.RH.CLR.ZINC*	1	-
14	587115301	PIN *PIN.CLEVIS.3/16X.475*	1	-
15	587225301	PIN *PIN COTTER;LOCKING;BOWTIE;1IN*	1	-
16	596299801	SPRING *SPRING.BRAKE.ROD.CLEAR.ZINC*	2	-
17	595086601	NUT *NUT.HEX.1/4-20 ST ZPB*	2	-
18	596582301	WASHER *WASHER 0.28 X 0.63 CLR.ZN*	4	-
19	585474402	ROD *ROD.BYPASS.LH.EZT.CLEAR.ZINC*	1	-
20	585474502	ROD *ROD.BYPASS.RH.EZT.CLEAR.ZINC*	1	-
21	596580601	PIN	4	-

Ref.	Article N.	Description	Qty	Kit
		PIN.RETAINING.1-7/16 X 0.073		
22	586665101	SPRING *SPRING.ROD.BYPASS.EZT*	2	-
23	587653903	NUT *NUT.1/2-20UNF-2B.1/2-20X3/4GR8*	8	-
24	539110411	DRIVE BELT *Drive BELT, EZT'S*	1	-
1	596327001	SERVICE KIT *DECK.54CC.WELDMT.RZ*	1	-
2	592951801	DRIVE BELT	1	-
3	582760502	BLADE *BLADE.54CC.HI-LIFT.PZ.165.431*	3	-
4	590304407	COVER *COVER.PNT.54CC.MDRL.LH.ZTR.GRY*	1	-
5	590304207	COVER *COVER.PNT.54CC.MANDREL.RH.GREY*	1	-
6	534214702	HOUSING ASSY *HOUSING.ASM.NO-GREASE.CASTIRON*	3	-
7	589527301	WHEEL *WHEEL.GAUGE.WIDE(RALLY)*	4	-
8	574169601	ROLLER *ROLLER, GAUGE .635 BORE*	2	-
9	532175708	PULLEY ASSY *PULLEY.MANDREL.CRD 107CM.DOM.*	3	-
10	532197379	PULLEY *PULLEY.IDLER.4,5.X431*	2	-
11	532197380	PULLEY *PULLEY.IDLER.4,5.SPACER.X431*	1	-
12	590632204	DEFLECTOR ASSY *DEFLECTOR.ASM.54CC.RES.BLACK*	1	-
13	595297001	ROD *ROD.HINGE*	1	-
14	585323901	BEARING *BEARING.MANDREL.TOP.EXTENDED*	3	-
15	582219602	ARM *ARM.PNT.IDLER.CLEARCUT.54.EDIP*	1	-
16	536050602	LINK *ARM.FIXED.MOWER.SUSP.X431*	2	-
17	532415598	HOSE COUPLING *PORT.WASHOUT*	1	-
18	532416405	COUPLING *COUPLING.QUICK-CONNECT*	1	-
19	596482001	SPRING	2	-

Ref.	Article N.	Description	Qty	Kit
		SPRING.CLEAR.ZINC		
20	587354701	SPRING *SPRING.DEFLECTOR*	1	-
21	532197251	SPRING *USE FOR SERIAL # STARTING 02012025*000000 & AFTER*	1	-
21	587358401	SPRING *SPRING.EXTN.42FCS.TR.DECK.DRV*	1	-
22	574196502	TUBE *TUBE.ROLLER.AXLE.LONG.CLR.ZINC*	1	-
23	587256501	SHAFT *SHAFT ASM.MNDRL.N/GREASEABLE*	3	-
24	589813301	PLUG *PLUG.TREE..203HOLE.BLK*	3	-
25	590732501	BUMPER ASSY *BUMPER.ASM.54CC.TRIMSIDE.HUSQ*	1	-
26	532194209	SPRING *PIN.COTTER.7/16.BOW TIE LOCK*	2	-
27	593824001	STUD *STUD.W/DANTI-ROTATION*	2	-
28	532170165	BOLT *BOLT.SHOULDER.5/16-18 TT*	2	-
29	596434404	BOLT *BOLT.SHOULDER.3/8-16X3-5/8*	4	-
30	584309301	SCREW *SCREW.SEMS.7/16-20X1.HEX.HEAD*	3	-
31	596240801	BOLT *BOLT.EYELET.5/16-18 X 3-1/2*	1	-
32	584953901	BOLT *BOLT.HEX.WSHRHD.313-18X1.19*	12	-
33	596136301	BOLT *BOLT.CUP.HEAD.3/8-16 X 2*	1	-
34	594944501	BOLT *BLT.CUP.HD.SQR.1/2-13X8.0 G5*	1	-
35	532196539	BOLT *BOLT.SHOULDER*	2	-
36	532137729	SCREW *SCREW.THD.ROLL.1/4-20 X 5/8*	9	-
37	599972501	BOLT *BOLT.HEX.GR8.CLR.Zn*	1	-
38	588438301	SCREW *SCREW.7/16-14 X 2.125.WASHER*	1	-
39	596134801	HEXAGON NUT *NUT.HEX.9/16-18 X 1.010*	3	-

Ref.	Article N.	Description	Qty	Kit
40	873900600	NUT *NUT.LOCK.FLG.3/8-16UNC*	5	-
41	521991102	NUT *1/2-13.HEX.FLANGE.NYLOK*	1	-
42	596039201	LOCK NUT *NUT.SER.FLANGE.LOCKNUT.5/16-18*	2	-
43	596135701	LOCK NUT *NUT.LOCK.PRVL.TORQ.5/16-18X.68*	2	-
44	532110452	NUT *NUT.PUSH.PIN.HINGE.PHOS.&.OIL*	1	-
45	532178515	WASHER *WASHER.FLAT.HARDENED*	1	-
47	819191912	WASHER *WASHER.1-5/32 X 19/32 X 12GA*	2	-
48	598752001	MANDREL *MANDREL.CAST.IRON*	3	-
49	521938102	LINK *LINK.FRINT.SUSP.CLEAR.ZINC*	1	-
1	586429702	SHAFT ASSY *SHAFT ASSY*	1	-
2	586457101	LINK *LINK*	1	-
3	586457201	LINK *LINK*	1	-
4	587622901	LIFTING LEVER ASSY *LIFTING LEVER ASSY*	1	-
5	580486102	SPACER *SPACER*	2	-
6	585682102	BRACKET *BRACKET*	2	-
7	587623001	LINK ASSY *LINK ASSY*	2	-
7	596766601	LINK ARM ASSY *LINK*	2	-
8	525847202	LINK *LINK ASSY*	2	-
9	587140502	ARM *ARM*	2	-
10	587623001	LINK ASSY *LINK ASSY*	2	-
11	532411555	GRIP *GRIP*	2	-
12	586867601	SPRING	4	-

Ref.	Article N.	Description	Qty	Kit
		SPRING		
13	532196314	SPRING *SPRING*	1	-
14	596482001	SPRING *SPRING*	2	-
15	593824001	STUD *STUD*	2	-
16	532194208	PIN *PIN*	2	-
17	587225301	PIN *PIN*	4	-
18	532194209	SPRING *SPRING*	1	-
19	510184901	BUSHING *BUSHING*	2	-
20	585701401	PIN *PIN*	2	-
21	532194209	SPRING *SPRING*	2	-
22	585682001	ROD *ROD*	2	-
23	586457401	BELLCRANK *BELLCRANK*	1	-
24	586457501	BELLCRANK *BELLCRANK*	1	-
25	532196539	BOLT *BOLT*	2	-
26	586561301	SCREW *SCREW*	2	-
27	532137729	SCREW *SCREW*	2	-
28	596135701	LOCK NUT *NUT*	2	-
30	589464902	NUT *NUT*	2	-
31	596320001	WASHER *WASHER*	2	-
32	596565301	WASHER *WASHER*	2	-
33	812000002	RETAINER RING *RETAINER RING*	1	-
1	548323801	SEAT *SEAT.18.LOW.PROFILE.SUSPENSION*	1	-

Ref.	Article N.	Description	Qty	Kit
1	540603801	SEAT *FOR 97084740100, 97084750100*	1	-
2	598001601	SERVICE KIT *PLATE.MOUNTING.SK121.EDIP*	1	-
3	586220802	SUPPORT PLATE *PLATE.SUPPORT.DECK.LIFT*	1	-
4	586221202	PLATE *PLATE.DECK.LIFT.X431*	1	-
5	597160003	PLATE *PLATE.SEAT.SUPPORT.RZ.RVS.X668*	1	-
6	580308202	SUPPORT *SUPPORT.REAR.SEAT.PNT431*	2	-
7	873970500	NUT *NUT.LOCK.HEX.FLANGE*	4	-
9	539132140	SWITCH *SEAT.SWITCH*	1	-
9	540670401	SWITCH *FOR 97084740100, 97084750100*	1	-
11	586428601	SUPPORT LEG *SUPPORT.LEG.DECK.LIFT*	1	-
12	585989301	BUMPER *GROMMET.BUMPER*	2	-
13	539104763	CLIP *CLIP*	5	-
14	539990316	BOLT *BOLT*	4	-
15	510422701	SCREW *SCREW*	2	-
18	596240701	BOLT *BOLT*	2	-
19	874490512	BOLT *BOLT*	4	-
20	817000510	BOLT *BOLT*	6	-
21	594944401	NUT *NUT*	2	-
22	521996502	NUT *NUT.FLANGE.*	2	-
26	597869301	BOLT *BOLT.CARRI.SQUR.3/8X.45.CLR Zn*	2	-
28	597330002	BRACKET *BRCKT.SEAT.PIVOT.SK121.RZ.X431*	1	-
34	597553401	BUMPER	2	-

Ref.	Article N.	Description	Qty	Kit
		BUMPER.3/8-16.INTERNAL THREAD		
1	598851703	TUBE *TUBE.RZ.LEVER.W/GRIP.RT X428*	1	-
2	598851704	TUBE *TUBE.RZ.LEVER.W/GRIP.LT X428*	1	-
3	585124705	BRACKET *BRACKET.CONTROLS.ZTR.E-DIP*	2	-
4	539131518	BEARING *BEARING, FLANGE*	2	-
5	576140301	LEVER *LEVER.CONTROL*	2	-
6	587601703	LEVER *CNTRL.LEVER.*	2	-
7	584927201	SPACER *SPACER.PIVOT.CONTROL*	2	-
8	539102720	GAS SPRING *DAMPENER*	2	-
9	547930201	BLOCK *BLOCK.TRACKING.CONTROL.REC.BLK*	2	-
12	588604902	ROD *ROD.ASM.RH.ADJUSTABLE.*	1	-
13	588605002	ROD *ROD.ASM.LH.ADJUSTABLE.*	1	-
14	537602401	CLIP *CLIP.R-CLIP*	2	-
15	587601501	SWITCH *SWITCH.INTLK.RZ.RFRSH.BUTTON*	2	-
16	596434301	BOLT *BOLT.HX.1/2-13 X 2-3/4.CLR.ZNC*	2	-
17	585986101	BOLT *SCREW.SHAKEPROOF.1.25.BLACK*	2	-
18	592858702	BOLT *BOLT.5/16-18X.75.HEX.FLANGE*	8	-
19	596580801	BOLT *BOLT.HEX.SCREW.5/16-18 X 1*	2	-
20	587885301	SCREW *SCREW.CAP.SOCKET.6PT.5/16-18*	2	-
21	525544002	BOLT *BOLT.HEXAGON.HEAD.5/16-18X1.25*	4	-
22	574822701	SCREW *SCR #10-24 X .75 SKT HD BLK ZN*	2	-
23	539108010	NUT *NUT 1/2-13HX JM NYL INST GR2ZN*	2	-

Ref.	Article N.	Description	Qty	Kit
24	594944401	NUT *NUT.HEX.FLNG.5/16-18.NYLOC.CLR*	10	-
25	596583702	NUT *NUT.HEX.5/16-18.NYLOC.BLK_ZINC*	4	-
26	596039201	LOCK NUT *NUT.SER.FLANGE.LOCKNUT.5/16-18*	4	-
27	532423063	WASHER	1	-
1	536856401	WHEEL ASSY *WHEEL.ASM.K3012.20x10.BLACK*	2	-
2	580830801	WHEEL ASSY *WHEEL.ASSY.FRONT.CASTER.11X6-5*	2	-
2	595910102	WHEEL ASSY *FOR 97084740100, 97084750100*	1	-
3	586650310	YOKE *YOKE.CASTER.ASM.6.AM.GRY.X685*	2	-
4	596623501	VALVE *VALVE.ZERK.1/2.DRIVE IN*	2	-
5	539103300	NIPPLE *VALVE.ZERK.1/4*	2	-
6	539112660	BEARING *BEARING, FLANGED*	2	-
7	539117901	BLADE BUSHING *CASTER BUSHING*	2	-
8	595281301	CAP *CAP GREASE*	2	-
9	596301001	PLUG *PLUG.CASTER.CLEAR.ZINC*	2	-
10	585995401	SPACER *SPACER.PIVOT*	2	-
11	596388901	SPRING *SPRING.CASTER.CLEAR.ZINC*	2	-
12	596319901	SCREW *SCREW.HEX.5/16-18 X 1 GR5*	2	-
13	576601503	SCREW *BOLT.RHSNB; 1/2-13 X 7.5*	2	-
14	521991103	NUT *NUT.LOCK 1/2-13 NYLOK.BLK.Zn*	2	-
15	587653903	NUT *NUT.1/2-20UNF-2B.1/2-20X3/4GR8*	8	-
16	596319801	WASHER *WASHER.1.025 X 1.625 X 0.063*	2	-
1	598602606	CONSOLE ASSY *CONSOLE.ASM.RZ.RH.AMG.MS685*	1	-

Ref.	Article N.	Description	Qty	Kit
2	586621203	CONSOLE ASSY *CONSOLE.RZ.REFRESH.LH.MS685*	1	-
3	531016704	FUEL TANK ASSY *FUEL.TANK.ASM.RZ.2.25 2024*	1	-
4	529979701	HARNESS *FUEL.CAP.VENTED.BLK*	1	-
5	597873201	THROTTLE *THROTTLE.CABLE.ASSY 39*	1	-
6	586881503	CHOKE CONTROL ASSY *CHOKE.CONTROL.ASM.PUSH-IN*	1	-
7	539107541	IGNITION SWITCH *IGNITION SWITCH*	1	-
8	582107602	SWITCH *SWITCH.PTO.8TERMINAL.STD.RED*	1	-
9	587601501	SWITCH *SWITCH.INTLK.RZ.RFRSH.BUTTON*	2	-
11	585522709	CONTROL PANEL *CONTROL.PANEL.RZ.REFSH.AM.GRY*	1	-
12	532163465	BATTERY *BATTERY.12VOLT.28AMP.WET*	1	-
13	593634404	BRACKET *BRACKET.PNT.BATTERY.MOUNT.EDIP*	1	-
14	582609602	BOX *BOX.PNT.BATTERY.RZ.EDIP*	1	-
15	532131563	COVER *COVER.TERMINAL.RED*	2	-
16	539102759	INSULATOR *INSULATOR-BATTERY*	1	-
17	576618101	TANK VENT *VALVE, FUEL CHECK*	1	-
18	586123906	FUEL HOSE *FUEL.HOSE.SHUT.OFF.ASM.10.18*	1	-
19	582042802	SOLENOID *SOLENOID W/BRASS.PLUNGER.Zn*	1	-
20	587198601	HARNESS *HARNESS.BTTRY.CABLE.RZ.REFRESH*	1	-
21	587044550	HOSE *HOSE.3/16.VAPOR.LINE.50LGTH*	1	-
22	547159601	GROMMET *VITON.GROMMET.FUEL.OUTLET*	1	-
23	584648201	GROMMET *GOMMET.FUEL.CHECK.VALVE*	1	-
24	532139277	NIPPLE	1	-

Ref.	Article N.	Description	Qty	Kit
		ELBOW.FUEL.TANK		
25	594919101	HOUR METER *HOURMETER.SRVMINDER.RECT*	1	-
26	532411935	KEY *IGNITION.KEY*	1	-
27	586108201	HARNESS *CABLE.BATTERY.POS.RZ*	1	-
28	588839401	HOOK *HOOK.J.BATTERY*	2	-
29	545227101	SCREW *SCREW.#6.PLASTITE*	2	-
30	596789701	SCREW *SCR.HEX.1/4-20X5/8*	1	-
31	532141841	SCREW *SCREW.10-16X0.650*	2	-
32	574822701	SCREW *SCREW.SAFETY.SWITCH*	2	-
33	595316801	BOLT *BOLT.BATTERY.BOX*	2	-
34	874760412	BOLT *BOLT.HEX.HD.1/4-20UNC X 3/4*	2	-
35	596135801	BOLT *BOLT.CONSOLE.*	2	-
36	596133601	LOCK NUT *LOCKNUT.KEPS.1/4-20*	2	-
37	521996502	NUT *NUT.BATTERY.BOX*	2	-
38	595086601	NUT *NUT.HEX.1/4-20 ST ZPB*	5	-
39	532123487	HOSE CLAMP *CLAMP.HOSE.BLK*	4	-
40	587044810	HOSE *HOSE.1/4.LOW.PERM.FUEL.LN.10*	1	-
41	587044818	HOSE *HOSE.1/4.LOW.PERM.FUEL.LN.18*	1	-
42	586337301	HARNESS *HARNESS.MAIN.RZ.WITHOUT.BRAKE*	1	-